NT3H2111/NT3H2211

NTAG I²C *plus*, NFC Forum Type 2 Tag compliant IC with I²C interface

Rev. 3.0 — 3 February 2016
359930

Product data sheet
COMPANY PUBLIC

1. General description

Designed to be the perfect enabler for NFC in home-automation and consumer applications, this feature-packed, second-generation connected NFC tag is the fastest, least expensive way to add tap-and-go connectivity to just about any electronic device.

NXP NTAG I²C *plus* is a family of connected NFC tags that combine a passive NFC interface with a contact I²C interface. As the second generation of NXP's industry leading connected-tag technology, these devices maintain full backward compatibility with first-generation NTAG I²C products, while adding new, advanced features for password protection, full memory-access configuration from both interfaces, and an originality signature for protection against cloning.

The second-generation technology provides four times higher pass-through performance, along with energy harvesting capabilities, yet NTAG I²C *plus* devices are optimized for use in entry-level NFC applications and offer the lowest BoM of any NFC solution.

I²C and NFC communications are based on simple, standard command sets, and are augmented by the demo board OM5569/NT322E, which includes online reference source code. All that is required is a simple antenna design (see Ref. 5), with no or only limited extra components, and there are plenty of reference designs online for inspiration.

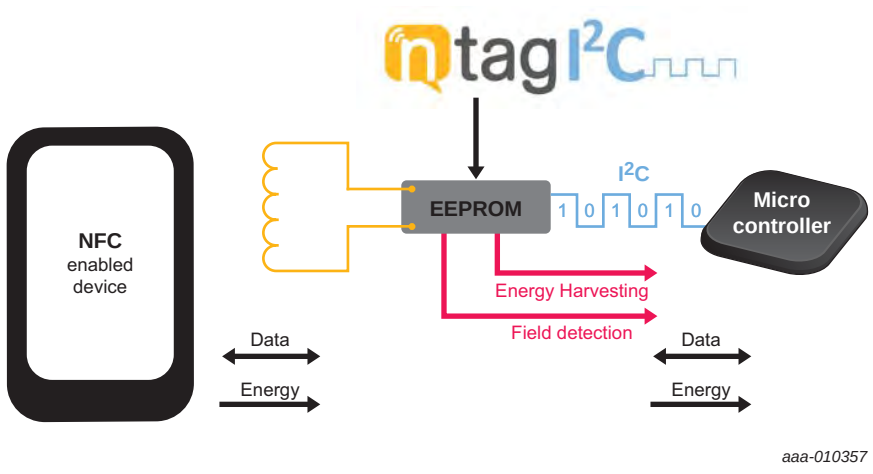

Fig 1. Contactless and contact system

2. Features and benefits

2.1 Key features

- Interoperability
  - ISO/IEC 14443 Part 2 and 3 compliant
  - NFC Forum Type 2 Tag compliant
  - Unique 7-byte UID
  - GET_VERSION command for easy identification of chip type and supported features
  - Input capacitance of 50 pF
- Host interface
  - I²C slave
  - Configurable event detection pin to signal NFC or pass-through data events
- Memory
  - 888/1912 bytes of EEPROM-based user memory
  - 64 bytes SRAM buffer for transfer of data between NFC and I²C interfaces with memory mirror or pass-through mode
  - Clear arbitration between NFC and I²C memory access
- Data transfer
  - Pass-through mode with 64-byte SRAM buffer
  - FAST_WRITE and FAST_READ NFC commands for higher data throughput
- Security and memory-access management
  - Full, read-only, or no memory access from NFC interface, based on 32-bit password
  - Full, read-only, or no memory access from I²C interface
  - NFC silence feature to disable the NFC interface
  - Originality signature based on Elliptic Curve Cryptography (ECC) for simple, genuine authentication
- Power Management
  - Configurable field-detection output signal for data-transfer synchronization and device wake-up
  - Energy harvesting from NFC field, so as to power external devices (e.g. connected microcontroller)
- Industrial requirements
  - Temperature range from -40 °C up to 105 °C

2.2 NFC interface

- Contactless transmission of data
- NFC Forum Type 2 Tag compliant (see Ref. 1)
- ISO/IEC 14443A compliant (see Ref. 2)
- 4 bytes (one page) written including all overhead in 4.8 ms via EEPROM or 0.8 ms via SRAM
- 64 bytes (whole SRAM) written including all overhead in 6.1 ms using FAST_WRITE command

All information provided in this document is subject to legal disclaimers.

© NXP Semiconductors N.V. 2016. All rights reserved.

- Data integrity of 16-bit CRC, parity, bit coding, bit counting
- Operating distance of up to 100 mm (depending on various parameters, such as field strength and antenna geometry)
- True anticollision
- Unique 7 byte serial number (cascade level 2 according to ISO/IEC 14443-3 (see Ref. 2)

2.3 Memory

- 1912 bytes freely available with User Read/Write area (478 pages with 4 bytes per pages) for the 2k version
- 888 bytes freely available with User Read/Write area (222 pages with 4 bytes per pages) for the 1k version
- 64 bytes SRAM volatile memory without write endurance limitation
- Data retention time of minimum 20 years
- EEPROM write endurance minimum 500.000 cycles

2.4 I²C interface

- I²C slave interface supports frequencies up to 400 kHz (see Section 13.1)
- 16 bytes (one block) written in 4.5 ms (EEPROM) or 0.4 ms (SRAM - pass-through mode) including all overhead
- RFID chip can be used as standard I²C EEPROM and I²C SRAM

2.5 Security

- Manufacturer-programmed 7-byte UID for each device
- Capability container with one time programmable bits
- Field programmable read-only locking function per page for first 12 pages and per 16 (1k version) or 32 (2k version) pages for the extended memory section
- ECC-based originality signature
- 32-bit password protection to prevent unauthorized memory operations from NFC perspective may be enabled for parts of, or complete memory
- Access to protected data from I²C perspective may be restricted
- Pass-through and mirror mode operation may be password protected
- Protected data can be safeguarded against limited number of negative password authentication attempts

2.6 Key benefits

- Full interoperability with every NFC-enabled device
- Smooth end-user experience with super-fast data exchange via NFC and I²C interface
- Zero-power operation with non-volatile data storage
- Lowest bill of materials and smallest footprint for NFC solution in embedded electronics
- Data protection to prevent unauthorized data manipulation
- Multi-application support, enabled by memory size and segmentation options

All information provided in this document is subject to legal disclaimers.

© NXP Semiconductors N.V. 2016. All rights reserved.

3. Applications

NXP NTAG I²C *plus* is a family of connected NFC tags that combine a passive NFC interface with a contact I²C interface. As the second generation of NXP's industry-leading connected-tag technology, these devices maintain full backward compatibility with first-generation NTAG I²C products, while adding new, advanced features for password protection, full memory-access configuration from both interfaces, and an originality signature for protection against cloning.

The second-generation technology provides four times higher pass-through performance, along with energy harvesting capabilities, yet NTAG I²C *plus* devices are optimized for use in entry-level NFC applications like:

- IoT nodes (home automation, smart home, etc.)
- Pairing and configuration of consumer applications
- NFC accessories (headsets, speakers, etc.)
- Wearable infotainment
- Fitness equipment
- Consumer electronics
- Healthcare
- Smart printers
- Meters
- Electronic shelf labels

All information provided in this document is subject to legal disclaimers.

© NXP Semiconductors N.V. 2016. All rights reserved.

4. Ordering information

Table 1. Ordering information

Type number	Package		
	Name	Description	Version
NT3H2111W0FHK	XQFN8	Plastic, extremely thin quad flat package; no leads; 8 terminals; body 1.6 x 1.6 x 0.6 mm; 1k bytes memory, 50pF input capacitance	SOT902-3
NT3H2211W0FHK	XQFN8	Plastic, extremely thin quad flat package; no leads; 8 terminals; body 1.6 x 1.6 x 0.6 mm; 2k bytes memory, 50pF input capacitance	SOT902-3
NT3H2111W0FTT	TSSOP8	Plastic thin shrink small outline package; 8 leads; body width 3 mm; 1k bytes memory; 50pF input capacitance	SOT505-1
NT3H2211W0FTT	TSSOP8	Plastic thin shrink small outline package; 8 leads; body width 3 mm; 2k bytes memory; 50pF input capacitance	SOT505-1
NT3H2111W0FT1	SO8	Plastic small outline package; 8 leads; body width 3.9 mm, 1k bytes memory; 50pF input capacitance	SOT96-1
NT3H2211W0FT1	SO8	Plastic small outline package; 8 leads; body width 3.9 mm, 2k bytes memory; 50pF input capacitance	SOT96-1
NT3H2111W0FUG	FFC bumped	8 inch wafer, 150um thickness, on film frame carrier, electronic fail die marking according to SECS-II format), Au bumps, 1k Bytes memory, 50pF input capacitance	-
NT3H2211W0FUG	FFC bumped	8 inch wafer, 150um thickness, on film frame carrier, electronic fail die marking according to SECS-II format), Au bumps, 2k Bytes memory, 50pF input capacitance	-

5. Marking

Table 2. Marking codes

Type number	Marking code		
	Line 1	Line 2	Line 3
NT3H2111FHK	211	-	-
NT3H2211FHK	221	-	-
NT3H2111W0FTT	32111	DBSN ASID	yww
NT3H2211W0FTT	32211	DBSN ASID	yww
NT3H2111W0FT1	NT32111	DBSN ASID	nDyww
NT3H2211W0FT1	NT32211	DBSN ASID	nDyww

All information provided in this document is subject to legal disclaimers.

© NXP Semiconductors N.V. 2016. All rights reserved.

6. Block diagram

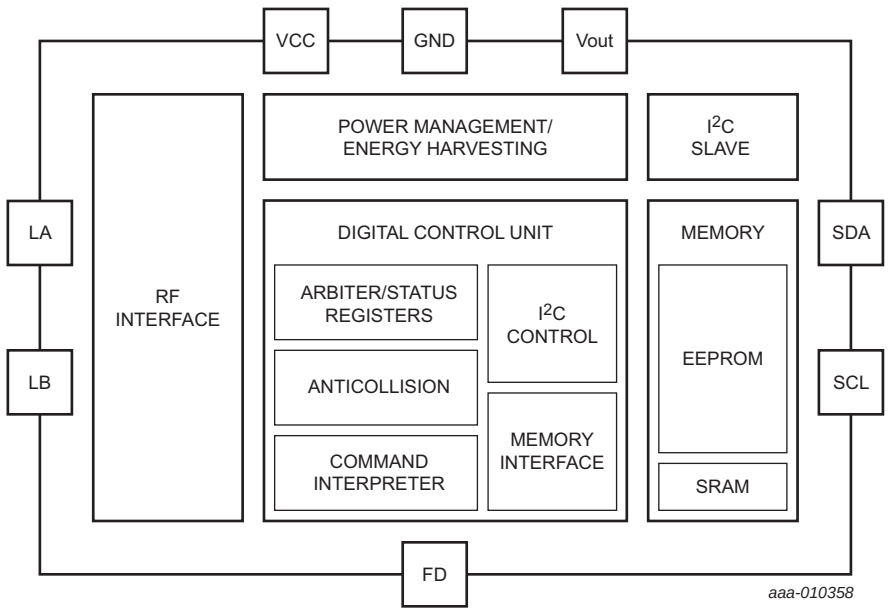

Fig 2. Block diagram

7. Pinning information

7.1 Pinning

7.1.1 XQFN8

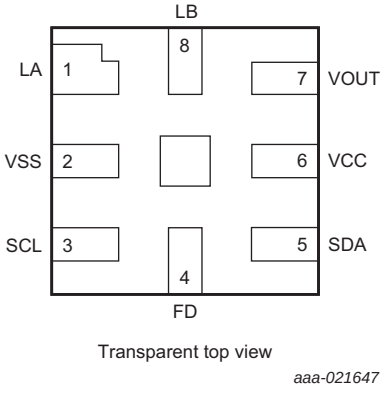

Fig 3. Pin configuration for XQFN8

All information provided in this document is subject to legal disclaimers.

© NXP Semiconductors N.V. 2016. All rights reserved.

7.1.2 TSSOP8

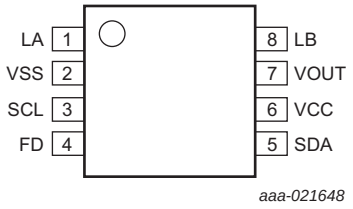

Fig 4. Pin configuration for TSSOP8

7.1.3 SO8

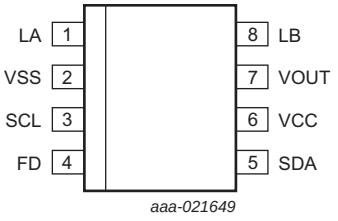

Fig 5. Pin configuration for SO8

7.2 Pin description

Table 3. Pin description for XQFN8, TSSOP8 and SO8

Pin	Symbol	Description
1	LA	Antenna connection LA
2	VSS	GND
3	SCL	Serial clock I²C
4	FD	Field detection
5	SDA	Serial data I²C
6	VCC	VCC in connection (external power supply)
7	VOUT	Voltage out (energy harvesting)
8	LB	Antenna connection LB

All information provided in this document is subject to legal disclaimers.

© NXP Semiconductors N.V. 2016. All rights reserved.

8. Functional description

8.1 Block description

NTAG I²C *plus* ICs consist of EEPROM, SRAM, NFC interface, Digital Control Unit (Command interpreter, Anticollision, Arbiter/Status registers, I²C control and Memory Interface), Power Management and Energy Harvesting Unit and an I²C slave interface. Energy and data are transferred via an antenna consisting of a coil with a few turns, which is directly connected to NTAG I²C *plus* IC.

8.2 NFC interface

The passive NFC-interface is based on the ISO/IEC 14443-3 Type A standard.

It requires to be supplied by an NFC field (e.g. NFC enabled device) always to be able to receive appropriate commands and send the related responses.

As defined in ISO/IEC 14443-3 Type A for both directions of data communication, there is one start bit (start of communication) at the beginning of each frame. Each byte is transmitted with an odd parity bit at the end. The LSB of the byte with the lowest address of the selected block is transmitted first.

For a multi-byte parameter, the least significant byte is always transmitted first. For example, when reading from the memory using the READ command, byte 0 from the addressed block is transmitted first, followed by bytes 1 to byte 3 out of this block. The same sequence continues for the next block and all subsequent blocks.

8.2.1 Data integrity

The following mechanisms are implemented in the contactless communication link between the NFC device and the NTAG I²C *plus* IC to ensure very reliable data transmission:

- 16 bits CRC per block
- Parity bits for each byte
- Bit count checking
- Bit coding to distinguish between “1”, “0” and “no information”
- Channel monitoring (protocol sequence and bit stream analysis)

The commands are initiated by the NFC device and controlled by the Digital Control Unit of the NTAG I²C *plus* IC. The command response depends on the state of the IC, and for memory operations, the access conditions valid for the corresponding page.

All information provided in this document is subject to legal disclaimers.

© NXP Semiconductors N.V. 2016. All rights reserved.

8.2.2 NFC state machine

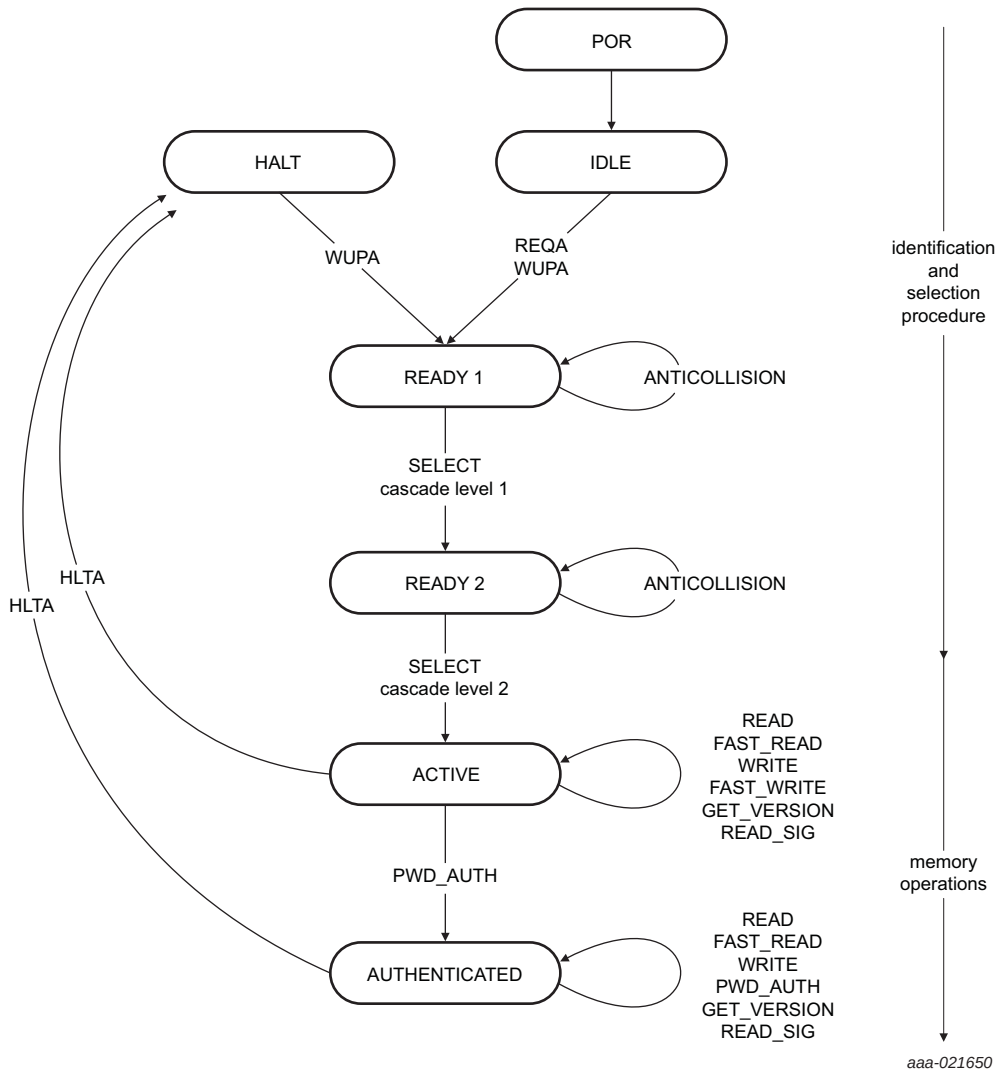

Fig 6. NFC state machine of NTAG I²C *plus*

The overall NFC state machine is summarized in Figure 6. When an error is detected or an unexpected command is received, in each state the tag returns to IDLE or HALT state as defined in ISO/IEC 14443-3 Type A.

8.2.2.1 IDLE state

After a Power-On Reset (POR), the NTAG I²C *plus* switches to the default waiting state, namely the IDLE state. It exits IDLE towards READY 1 state when a REQA or a WUPA command is received from the NFC device. Any other data received while in IDLE state is interpreted as an error, and the NTAG I²C *plus* remains in the IDLE state.

All information provided in this document is subject to legal disclaimers.

© NXP Semiconductors N.V. 2016. All rights reserved.

8.2.2.2 READY 1 state

In the READY 1 state, the NFC device resolves the first part of the UID (3 bytes) using the ANTICOLLISION or SELECT commands for cascade level 1. READY 1 state is correctly exited after execution of the following command:

- SELECT command from cascade level 1 with the matching complete first part of the UID: the NFC device switches the NTAG I²C *plus* into READY 2 state where the second part of the UID is resolved.

8.2.2.3 READY 2 state

In the READY 2 state, the NFC device resolves the second part of the UID (4 bytes) using the ANTICOLLISION or SELECT command for cascade level 2. READY2 state is correctly exited after execution of the following command:

- SELECT command from cascade level 2 with the matching complete second part of the UID: the NFC device switches the NTAG I²C *plus* into ACTIVE state where all application-related commands can be executed.

Remark: The response of the NTAG I²C *plus* to the SELECT command is the Select AcKnowledge (SAK) byte. In accordance with ISO/IEC 14443-3 Type A, this byte indicates if the anticollision cascade procedure has finished. If finished, the NTAG I²C *plus* is now uniquely selected and only this device will communicate with the NFC device even when other contactless devices are present in the NFC device field.

8.2.2.4 ACTIVE state

All unprotected memory operations are operated in the ACTIVE and AUTHENTICATED states.

The ACTIVE state is exited with the PWD_AUTH command and upon reception of a correct password, the NTAG I²C *plus* transits to AUTHENTICATED state after responding with PACK or with the HLTA command the NTAG I²C *plus* transits to the HALT state.

Any other data received when the device is in ACTIVE state is interpreted as an error. Depending on its previous state, the NTAG I²C *plus* returns to either to the IDLE or HALT state.

8.2.2.5 AUTHENTICATED state

Protected memory operations are only operated in the AUTHENTICATED state, however access to the unprotected memory is possible, too.

The AUTHENTICATED state is exited with the HLTA command and upon reception, the NTAG I²C *plus* transits to the HALT state. Any other data received when the device is in AUTHENTICATED state is interpreted as an error. Depending on its previous state, the NTAG I²C *plus* returns to either to the IDLE or HALT state.

8.2.2.6 HALT state

HALT and IDLE states constitute the two waiting states implemented in the NTAG I²C *plus*. An already processed NTAG I²C *plus* in ACTIVE or AUTHENTICATED state can be set into the HALT state using the HLTA command. In the anticollision phase, this state helps the NFC device distinguish between processed tags and tags yet to be selected.

All information provided in this document is subject to legal disclaimers.

© NXP Semiconductors N.V. 2016. All rights reserved.

The NTAG I²C *plus* can only exit HALT state upon execution of the WUPA command. Any other data received when the device is in this state is interpreted as an error, and NTAG I²C *plus* state remains unchanged.

8.3 Memory organization

The memory map is detailed in Table 4 (1k memory) and Table 5 (2k memory) from the NFC interface and in Table 6 (1k memory) and Table 7 (2k memory) from the I²C interface. The SRAM memory is not accessible from the NFC interface, because in the default settings of the NTAG I²C *plus* the pass-through mode is disabled. Please refer to Section 11 for examples of memory map from the NFC interface with SRAM mapping.

The structure of manufacturing data, static and dynamic lock bytes, capability container and user memory pages are compatible with other NTAG products.

Any memory access which starts at a valid address and extends into an invalid access region will return 00h value in the invalid region.

All information provided in this document is subject to legal disclaimers.

© NXP Semiconductors N.V. 2016. All rights reserved.

8.3.1 Memory map from NFC perspective

Memory access from the NFC perspective is organized in pages of 4 bytes each. If password protection is not used, whole user memory is unprotected.

Table 4. NTAG I²C *plus* 1k memory organization from the NFC perspective

Sector address	Page address		Byte number within a page				Access cond. ACTIVE state	Access cond. AUTH. state
	Dec.	Hex.	0	1	2	3		
0	0	00h	Serial number				READ	
	1	01h	Serial number			Internal	READ	
	2	02h	Internal		Static lock bytes		READ/R&W	
	3	03h	Capability Container (CC)				READ&WRITE	
	4	04h	Unprotected user memory				READ&WRITE	
	...	...						
	AUTH0	AUTH0	Protected user memory				READ[1]	READ&WRITE
	...	...						
	225	E1h						
	226	E2h	Dynamic lock bytes			00h	R&W/READ	
	227	E3h	RFU	RFU	RFU	AUTH0	READ[1]	READ&WRITE
	228	E4h	ACCESS	RFU	RFU	RFU	READ[1]	READ&WRITE
	229	E5h	PWD[2]				READ[1]	READ&WRITE
	230	E6h	PACK[2]		RFU	RFU	READ[1]	READ&WRITE
	231	E7h	PT_I2C	RFU	RFU	RFU	READ[1]	READ&WRITE
	232	E8h	Configuration registers				see 8.3.12	
	233	E9h						
	234	EAh	Invalid access - returns NAK				n.a.	
	235	EBh						
	236	ECh	Session registers				see 8.3.12	
	237	EDh						
	238	EEh	Invalid access - returns NAK				n.a.	
	239	EFh						
	240	F0h	Invalid access - returns NAK				n.a.	
	...	...						
	255	FFh						
1	...	...	Invalid access - returns NAK				n.a.	
2	...	...	Invalid access - returns NAK				n.a.	
3	0	00h	Invalid access - returns NAK				n.a.	
	...	...						
	248	F8h	Mirrored session registers				see 8.3.12	
	249	F9h						
	...	...	Invalid access - returns NAK				n.a.	
	255	FFh						

[1] If NFC_PROT bit is set to 1b, NTAG I²C *plus* returns NAK
[2] On reading PWD or PACK, NTAG I²C *plus* returns always 00h for all bytes

All information provided in this document is subject to legal disclaimers.

© NXP Semiconductors N.V. 2016. All rights reserved.

Table 5. NTAG I²C *plus* 2k memory organization from the NFC perspective

Sector address	Page address		Byte number within a page				Access cond. ACTIVE state	Access cond. AUTH. state
	Dec.	Hex.	0	1	2	3		
0	0	00h	Serial number				READ	
	1	01h	Serial number			Internal	READ	
	2	02h	Internal		Static lock bytes		READ/R&W	
	3	03h	Capability Container (CC)				READ&WRITE	
	4	04h	Unprotected user memory				READ&WRITE	
	...	...						
	AUTH0	AUTH0	Protected user memory				READ[1]	READ&WRITE
	...	...						
	225	E1h						
	226	E2h	Dynamic lock bytes			00h	R&W/READ	
	227	E3h	RFU	RFU	RFU	AUTH0	READ[1]	READ&WRITE
	228	E4h	ACCESS	RFU	RFU	RFU	READ[1]	READ&WRITE
	229	E5h	PWD[2]				READ[1]	READ&WRITE
	230	E6h	PACK[2]		RFU	RFU	READ[1]	READ&WRITE
	231	E7h	PT_I2C	RFU	RFU	RFU	READ[1]	READ&WRITE
	232	E8h	Configuration registers				see 8.3.12	
	233	E9h						
	234	EAh	Invalid access - returns NAK				n.a.	
	235	EBh						
	236	ECh	Session registers				see 8.3.12	
	237	EDh						
	238	EEh	Invalid access - returns NAK				n.a.	
	...	...						
	255	FFh						
1	0	00h	(Un-)protected user memory[3,4]				see protected user memory in Sector 0	
	...	...						
	255	FFh						
2	...	...	Invalid access - returns NAK				n.a.	
3	0	00h	Invalid access - returns NAK				n.a.	
	...	...						
	248	F8h	Mirrored session registers				see 8.3.12	
	249	F9h						
	...	...	Invalid access - returns NAK				n.a.	
	255	FFh						

[1] If NFC_PROT bit is set to 1b, NTAG I²C *plus* returns NAK
[2] On reading PWD or PACK, NTAG I²C *plus* returns always 00h for all bytes
[3] If 2K_PROT bit is set to 1b, complete Sector 1 of NTAG I²C *plus* is password protected
[4] If NFC_DIS_SEC1 bit is set to 1b, complete Sector 1 of NTAG I²C *plus* is not accessible from NFC perspective

All information provided in this document is subject to legal disclaimers.

© NXP Semiconductors N.V. 2016. All rights reserved.

8.3.2 Memory map from I²C interface

The memory access of NTAG I²C *plus* from the I²C interface is organized in blocks of 16 bytes each.

All information provided in this document is subject to legal disclaimers.

© NXP Semiconductors N.V. 2016. All rights reserved.

Table 6. NTAG I²C *plus* 1k memory organization from the I²C perspective

I²C block address		Byte number within a block				Access conditions		
		0	1	2	3	I²C_PROT		
		4	5	6	7			
		8	9	10	11	00b	01b	1xb
Dec.	Hex.	12	13	14	15			
0	00h	I²C addr.[1]	Serial number			READ&WRITE		
		Serial number			Internal			
		Internal		Static lock bytes				
		Capability Container (CC)						
1	01h	Unprotected user memory				READ&WRITE		
...	...							
...	...							
AUTH0	AUTH0	Protected user memory				READ&WRITE	READ	NAK
...	...							
56	38h	Protected user memory				READ&WRITE	READ	NAK
		Dynamic lock bytes			00h	READ&WRITE		
		RFU	RFU	RFU	AUTH0			
57	39h	ACCESS	RFU	RFU	RFU			
		PWD[2]						
		PACK[2]		RFU	RFU			
		PT_I2C	RFU	RFU	RFU			
58	3Ah	Configuration registers				see 8.3.12		
		00h	00h	00h	00h	READ		
		00h	00h	00h	00h			
59	3Bh	Invalid access - returns NAK				n.a.		
...	...							
247	F7h							
248	F8h	SRAM memory (64 bytes)				READ&WRITE		
...	...							
251	FBh							
...	...	Invalid access - returns NAK				n.a.		
254	FEh	Session registers				see 8.3.12		
		00h	00h	00h	00h	READ		
		00h	00h	00h	00h			
...	...	Invalid access - returns NAK				n.a.		

[1] The byte 0 of block 0 is always read as 04h. Writing to this byte modifies the I²C address.
[2] On reading PWD and PACK, NTAG I²C *plus* returns always 00h for all bytes

All information provided in this document is subject to legal disclaimers.

© NXP Semiconductors N.V. 2016. All rights reserved.

Table 7. NTAG I²C *plus* 2k memory organization from the I²C perspective

I²C block address		Byte number within a block				Access conditions		
		0	1	2	3	I²C_PROT		
		4	5	6	7			
		8	9	10	11	00b	01b	1xb
Dec.	Hex.	12	13	14	15			
0	00h	I²C addr.[1]	Serial number			READ&WRITE		
		Serial number			Internal			
		Internal		Static lock bytes				
		Capability Container (CC)						
1	01h	Unprotected user memory				READ&WRITE		
...	...							
...	...							
AUTH0	AUTH0	Protected user memory				READ&WRITE	READ	NAK
...	...							
56	38h	Protected user memory				READ&WRITE	READ	NAK
		Protected user memory						
		Dynamic lock bytes			00h	READ&WRITE		
		RFU	RFU	RFU	AUTH0			
57	39h	ACCESS	RFU	RFU	RFU			
		PWD[2]						
		PACK[2]		RFU	RFU			
		PT_I2C	RFU	RFU	RFU			
58	3Ah	Configuration registers				see 8.3.12		
		00h	00h	00h	00h	READ		
		00h	00h	00h	00h			
...	...	Invalid access - returns NAK				n.a.		
64	40h	(Un-)protected user memory				READ&WRITE	READ	NAK
...	...							
127	7Fh							
...	...	Invalid access - returns NAK				n.a.		
248	F8h	SRAM memory (64 bytes)				READ&WRITE		
...	...							
251	FBh							
...	...	Invalid access - returns NAK				n.a.		
254	FEh	Session registers				see 8.3.12		
		00h	00h	00h	00h	READ		
		00h	00h	00h	00h			
...	...	Invalid access - returns NAK				n.a.		

[1] The byte 0 of block 0 is always read as 04h. Writing to this byte modifies the I²C address.
[2] On reading PWD and PACK, NTAG I²C *plus* returns always 00h for all bytes

All information provided in this document is subject to legal disclaimers.

© NXP Semiconductors N.V. 2016. All rights reserved.

8.3.3 EEPROM

The EEPROM is a non-volatile memory that stores the 7 byte UID, the memory lock conditions, IC configuration information and the 1912 bytes of user memory (888 byte user memory in case of the NTAG I²C *plus* 1k version).

Sector 0 memory map looks totally the same for NTAG I²C *plus* 1k and 2k version, the only difference is the dynamic lock bit granularity.

NXP introduced with NTAG I²C *plus* the possibility to split the memory in an open and a password protected area see Section 8.3.11.

8.3.4 SRAM

For frequently changing data, a volatile memory of 64 bytes with unlimited endurance is built in. The 64 bytes are mapped in a similar way as done in the EEPROM, i.e., 64 bytes are seen as 16 pages of 4 bytes from NFC perspective.

The SRAM is only available if the tag is powered via the VCC pin.

The SRAM is located at the end of the memory space and it is always directly accessible by the I²C host (addresses F8h to FBh). An NFC device cannot access the SRAM memory in normal mode (i.e., outside the pass-through mode). The SRAM is only accessible by the NFC device if the SRAM is mirrored onto the EEPROM memory space.

With SRAM mirror enabled (SRAM_MIRROR_ON_OFF = 1b - see Section 11.2), the SRAM can be mirrored in the User Memory from start page 01h to 74h for access from the NFC side.

The Memory mirror must be enabled once both interfaces are ON as this feature is disabled after each POR.

The register SRAM_MIRROR_BLOCK (see Table 14) indicates the address of the first page of the SRAM buffer. In the case where the SRAM mirror is enabled and the READ command is addressing blocks where the SRAM mirror is located, the SRAM byte values will be returned instead of the EEPROM byte values. Similarly, if the tag is not VCC powered, the SRAM mirror is disabled and reading out the bytes related to the SRAM mirror position would return the values from the EEPROM.

In the pass-through mode (PTHRU_ON_OFF = 1b - see Section 8.3.12), the SRAM is mirrored to the fixed address F0h - FFh for NFC access (see Section 11) in the first memory sector (Sector 0) for NTAG I²C *plus*.

8.3.5 Serial number (UID)

The unique 7-byte serial number (UID) is programmed into the first 7 bytes of memory covering page addresses 00h and 01h - see Figure 7. These bytes are programmed and write protected during production.

UID0 is fixed to the value 04h - the manufacturer ID for NXP Semiconductors in accordance with ISO/IEC 14443-3.

All information provided in this document is subject to legal disclaimers.

© NXP Semiconductors N.V. 2016. All rights reserved.

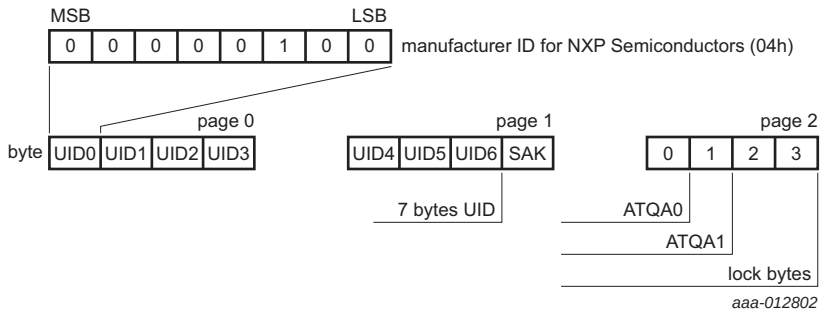

Fig 7. Serial number (UID)

8.3.6 Static Lock Bytes

According to NFC Forum Type 2 Tag specification the bits of byte 2 and byte 3 of page 02h (via NFC) or byte 10 and 11 address 00h (via I²C) represent the field programmable, read-only locking mechanism (see Figure 8). Each page from 03h (CC) to 0Fh can be individually locked by setting the corresponding locking bit to logic 1b to prevent further write access. After locking, the corresponding page becomes read-only memory.

In addition NTAG I²C *plus* uses the three least significant bits of lock byte 0 as the block-locking bits. Bit 2 controls pages 0Ah to 0Fh (via NFC), bit 1 controls pages 04h to 09h (via NFC) and bit 0 controls page 03h (CC). Once the block-locking bits are set, the locking configuration for the corresponding memory area is frozen, e.g. cannot be changed to read-only anymore.

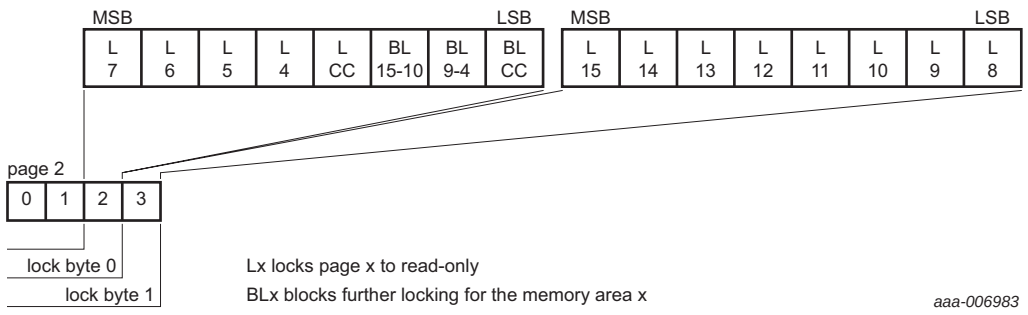

Fig 8. Static lock bytes 0 and 1

For example, if BL15-10 is set to logic 1b, then bits L15 to L10 (lock byte 1, bit[7:2]) can no longer be changed. The static locking and block-locking bits are set by the bytes 2 and 3 of the WRITE command to page 02h. The contents of the lock bytes are bit-wise OR'ed and the result then becomes the new content of the lock bytes. This process is irreversible from NFC perspective. If a bit is set to logic 1b, it cannot be changed back to logic 0b. From I²C perspective, the bits can be reset to 0b by writing bytes 10 and 11 of block 00h. As I²C address is coded in byte 0 of block 0, it may be changed unintentionally.

The contents of bytes 0 and 1 of page 02h (via NFC) are unaffected by the corresponding data bytes of the WRITE command.

The default value of the static lock bytes is 0000h.

All information provided in this document is subject to legal disclaimers.

© NXP Semiconductors N.V. 2016. All rights reserved.

8.3.7 Dynamic Lock Bytes

To lock the pages of NTAG I²C *plus* starting at page address 16 and onwards, the dynamic lock bytes are used. The dynamic lock bytes are located in Sector 0 at page E2h. The three lock bytes cover the memory area of 840 data bytes (NTAG I²C *plus* 1k) or 1864 data bytes (NTAG I²C *plus* 2k). The granularity is 16 pages for NTAG I²C *plus* 1k (see Figure 9) and 32 pages for NTAG I²C *plus* 2k (see Figure 10) compared to a single page for the first 48 bytes (see Figure 8).

NTAG I²C *plus* needs a Lock Control TLV as specified in NFC Forum Type 2 Tag specification to ensure NFC Forum Type 2 Tag compliancy.

When NFC Forum Type 2 Tag transition to READ ONLY state is intended, all bits marked as RFUI and dynamic lock bits related to the protected area shall be set to 0b when writing to the dynamic lock bytes.

The default value of the dynamic lock bytes is 000000h. The value of Byte 3 is always 00h when read.

Like for the static lock bytes, this process of modifying the dynamic lock bits is irreversible from NFC perspective. If a bit is set to logic 1b, it cannot be changed back to logic 0b. From I²C interface, these bits can be set to 0b again.

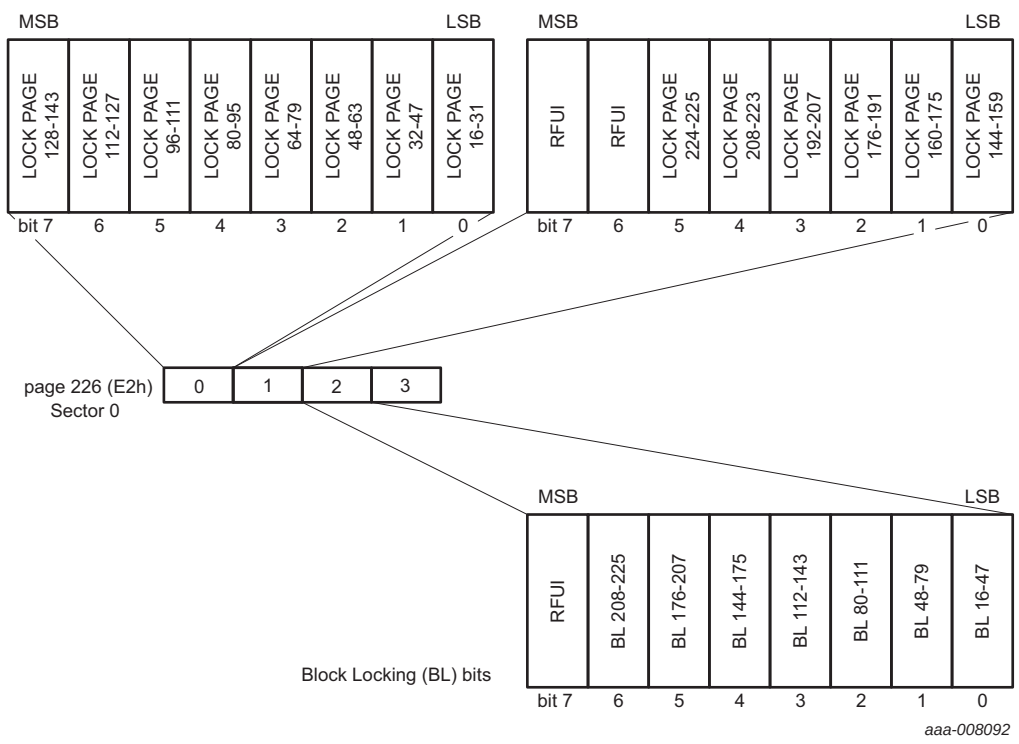

Fig 9. NTAG I²C *plus* 1k Dynamic lock bytes 0, 1 and 2

All information provided in this document is subject to legal disclaimers.

© NXP Semiconductors N.V. 2016. All rights reserved.

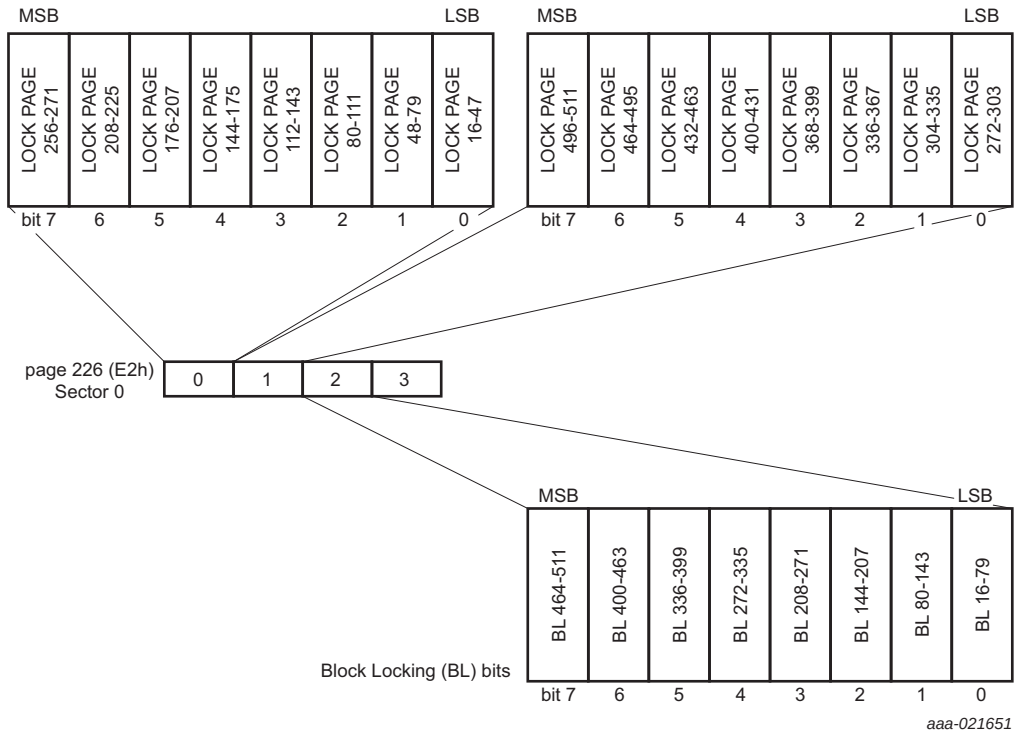

Fig 10. NTAG I²C *plus* 2k Dynamic lock bytes 0, 1 and 2

All information provided in this document is subject to legal disclaimers.

© NXP Semiconductors N.V. 2016. All rights reserved.

8.3.8 Capability Container (CC)

According to NFC Forum Type 2 Tag specification the CC is located on page 03h (see Ref. 1). To keep full flexibility to split the memory into an open and protected area, the default value of the CC is initialized with 00000000h during the IC production.

NDEF messages can only be written, when these CC bytes are set according to application-specific needs and NFC Forum specification by a WRITE command from the I²C or NFC interface. According to NFC Forum specification once set to 1b, an NFC Forum Device cannot set bits of the CC back to 0b. However, similar to the lock bits, setting these bits back to 0b is again possible from I²C perspective. As long as I²C address (byte 0) and static lock bytes (byte 10 and byte 11) are coded in block 00h, the I²C address may be changed unintentionally.

NXP recommends setting the size parameter of the CC only to values that the T2T_Area ends at lock bit granularity boundaries when using only part of the memory for storing NDEF messages. Consequently T2T_Area size should be 112 + 64*N or 888 bytes with N less or equal to 13 for the 1k version, or 176 + 128*N or 2032 bytes with N less or equal to 14 for the 2k version.

Note that the maximum NDEF Control TLV size is 883 bytes (5 bytes are needed for the Lock Control TLV) for the 1K version and 1902 bytes (5 bytes each for Lock Control TLV and Memory Control TLV to exclude 120 bytes reserved area at the end of sector 0) for the 2k version.

In Figure 11 it is shown how the CC is changed when going from READ/WRITE to READ ONLY state according to NFC Forum.

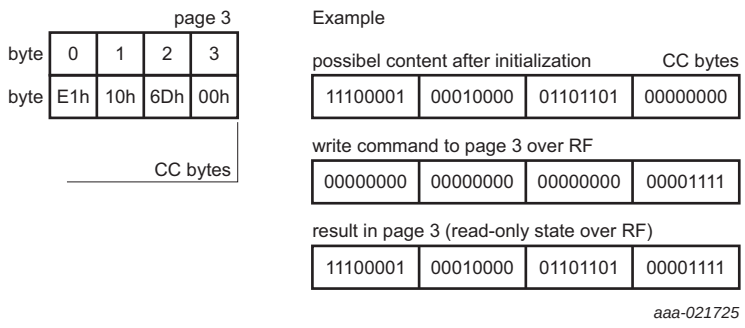

Fig 11. Possible configuration of CC bytes of NTAG I²C 1k version

8.3.9 User Memory pages

Pages 04h to E1h of Sector 0 via the NFC interface - Block 01h to 37h, plus the first 8 bytes of block 38h via the I²C interface is the user memory area for NTAG I²C *plus* 1k and 2k version.

In addition, complete Sector 1 (page 00h to FFh) via the NFC interface - block 40h to 7Fh via the I²C interface is used as user memory area for NTAG I²C *plus* 2k version.

All information provided in this document is subject to legal disclaimers.

© NXP Semiconductors N.V. 2016. All rights reserved.

8.3.10 Memory content at delivery

As described above the CC in page 03h is set to all 00h to keep the full flexibility. To allow NFC Forum NDEF message reading and writing page 03h (CC) and the following data page (NDEF TLV) of NTAG I²C *plus* need to be initialized by the user according to the NFC Forum Type 2 Tag specification (see Ref. 1). Table 8 shows an example of NFC Forum-compliant content using the whole memory of sector 0 for NDEF messages.

Remark: The default content of the data pages from page 04h onwards is not defined at delivery.

Table 8. Minimum memory content to be in initialized state for NTAG I²C *plus*

Page Address	Byte number within page			
	0	1	2	3
03h	E1h	10h	6Dh	00h
04h	03h	00h	FEh	00h

All information provided in this document is subject to legal disclaimers.

© NXP Semiconductors N.V. 2016. All rights reserved.

8.3.11 Password and Access Configuration

NTAG I²C *plus* can be configured to have password protected memory areas.

If this feature is used, NXP recommends changing and diversify the PWD and PACK for every single chip.

The password and access configuration area of pages E3h to E7h (Sector 0 - see Table 9) via the NFC interface or blocks 38h and 39h via the I²C interface are used to configure the password and access conditions of the NTAG I²C *plus*. Those bit values are stored in the EEPROM. Their values can be read and written by both interfaces when applicable and when not locked by the register lock bits (see REG_LOCK in Table 13).

AUTH0 defines the starting page address of the protected area in Sector 0. NXP recommends setting AUTH0 in a way always respecting the lock bit granularity. Setting AUTH0 greater EBh, disables password protection.

The NFC_PROT bit is used to either only require a PWD_AUTH for writing data to the protected area or even protect reading data from the protected area.

If password authentication is used, even the SRAM access can be protected by setting SRAM_PROT bit to 1b.

I2C_PROT enables the possibility to limit access to the protected area from I²C perspective to read only or no access at all.

AUTLIM value can be used to limit negative PWD_AUTH attempts.

For the 2k version of NTAG I²C *plus* NFC_DIS_SEC1 bit can be used to disable the access to Sector 1 from NFC perspective with the 2K_PROT bit password protection for Sector 1 can be enabled.

Once password protection is enabled, writing to Password and Access Configuration bytes is only possible after a successful password authentication. On reading the PWD or PACK, from NFC or I²C perspective, NTAG I²C *plus* always returns all 00h bytes.

A detailed description of the mechanism and how to program all the parameters is given in Section 8.7.

Table 9. Password and Access Configuration Register

NFC page address (Sector 0)		I²C block address		Byte number from NFC perspective			
Dec	Hex	Dec	Hex	0	1	2	3
224	E0h	56	38h	User Memory			
225	E1h						
226	E2h			Dynamic lock bytes			00h
227	E3h			RFU	RFU	RFU	AUTH0
228	E4h	57	39h	ACCESS	RFU	RFU	RFU
229	E5h			PWD			
230	E6h			PACK		RFU	RFU
231	E7h			PT_I2C	RFU	RFU	RFU

All information provided in this document is subject to legal disclaimers.

© NXP Semiconductors N.V. 2016. All rights reserved.

Table 10. Password and Access Configuration bytes

Bit	Field	Access via NFC	Access via I²C	Default values	Description
Authentication Pointer (AUTH0)					
7-0	AUTH0	R&W	R&W	FFh	Page address of Sector 0 from which onwards the password authentication is required to access the user memory from NFC perspective, dependent on NFC_PROT bit. If AUTH0 is set to a page address greater than EBh, the password protection is effectively disabled. Password protected area starts from page AUTH0 and ends at page EBh. Password protection is excluded for Dynamic Lock Bits, session registers and mirrored SRAM pages. Note: From I²C interface, you have access to all configuration pages until REG_LOCK_I2C bit is set to 1b.
Access Conditions (ACCESS)					
7	NFC_PROT	R&W	R&W	0b	Memory protection bit: 0b: write access to protected area is protected by the password 1b: read and write access to protected area is protected by the password
6	RFU	R	R	0b	RFU - keep at 0b
5	NFC_DIS_SEC1	R&W	R&W	0b	NFC access protection to Sector 1 0b: Sector 1 is accessible in 2k version 1b: Sector 1 in inaccessible and returns NAK0
4-3	RFU	R	R	00b	RFU - keep at 00b
2-0	AUTHLIM	R&W	R&W	000b	Limitation of negative password authentication attempts. After reaching the limit, protected area is not accessible any longer. 000b: limiting of negative password authentication attempts disabled. 001b-111b: maximum number of negative password authentication attempts is $2^{AUTHLIM}$
Password (PWD)					
31-0	PWD	R&W	R&W	FFFFFFFFh	32-bit password used for memory access protection. Reading PWD always returns 00000000h
Password Acknowledge (PACK)					
15-0	PACK	R&W	R&W	0000h	16-bit password acknowledge used during the password authentication process. Reading PACK always returns 0000h
Protection bits (PT_I2C)					
7-4	RFU	R	R	0000b	RFU - keep at 0000b

All information provided in this document is subject to legal disclaimers.

© NXP Semiconductors N.V. 2016. All rights reserved.

Table 10. *…continued* **Password and Access Configuration bytes**

Bit	Field	Access via NFC	Access via I²C	Default values	Description
3	2K_PROT	R&W	R&W	0b	Password protection for Sector 1 for 2k version 0b: password authentication for Sector 1 disabled 1b: password authentication needed to access Sector 1
2	SRAM_PROT	R&W	R&W	0b	Password protection for pass-through and mirror mode 0b: password authentication for pass-through mode disabled 1b: password authentication needed to access SRAM in pass-through mode
1-0	I2C_PROT	R&W	R&W	00b	Access to protected area from I²C perspective 00b: Entire user memory accessible from I²C 01b: read and write access to unprotected user area, read only access to protected area 1Xb: read and write access to unprotected area, no access to protected area. Note: Independent from these bits I²C has always R/W access to: • Session registers • SRAM • Configuration pages including PWD Configuration area, but dependent on REG_LOCK_I2C bit

8.3.12 NTAG I²C configuration and session registers

NTAG I²C *plus* behavior can be configured and read in two separate locations depending if the configurations shall be effective within the communication session (use session registers) or by default after Power-On Reset (POR) (use configuration registers).

The configuration registers of pages E8h to E9h (Sector 0 - see Table 11) via the NFC interface or block 3Ah via the I²C interface are used to configure the default behavior of the NTAG I²C *plus*. Those bit values are stored in the EEPROM and represent the default settings to be effective after POR. Their values can be read and written by both interfaces when applicable and when not locked by the register lock bits (see REG_LOCK in Table 13).

Table 11. Configuration register NTAG I²C *plus*

NFC address (Sector 0)		I²C Address		Byte number from NFC perspective			
Dec	Hex	Dec	Hex	0	1	2	3
232	E8h	58	3Ah	NC_REG	LAST_NDEF_BLOCK	SRAM_MIRROR_BLOCK	WDT_LS
233	E9h			WDT_MS	I2C_CLOCK_STR	REG_LOCK	RFU

The session register on pages ECh to EDh (Sector 0) via the NFC interface or block FEh via I²C, see Table 12, are used to configure or monitor the values of the current communication session. Those bits are read only via the NFC interface but may be read and written via the I²C interface.

For backward compatibility reasons the session registers are mirrored to Sector 3 (page F8h and F9h via the NFC interface).

All information provided in this document is subject to legal disclaimers.

© NXP Semiconductors N.V. 2016. All rights reserved.

Table 12. Session registers NTAG I²C *plus*

NFC address (Sector 0)		I²C Address		Byte number			
Dec	**Hex**	**Dec**	**Hex**	**0**	**1**	**2**	**3**
236	ECh	254	FEh	NC_REG	LAST_NDEF_BLOCK	SRAM_MIRROR _BLOCK	WDT_LS
237	EDh			WDT_MS	I2C_CLOCK_STR	NS_REG	RFU

Both, the session and the configuration registers have the same configuration options and parameters except the REG_LOCK bits, which are only available in the configuration register and the NS_REG bits which are only available in the session register. After POR, the content of the configuration register is loaded into the session register.

The values of both registers can be changed during a communication session. If the desired effect should be visible immediately, but only for the current communication session, the session registers must be used. After POR, the session registers values will again contain the configuration register values as before.

To change the default behavior, changes to the configuration register are needed, but the related effect will only be visible after the next POR.

To make the effect immediately and after next POR visible, changes to configuration and session registers are needed.

All registers and configuration default values, access conditions and descriptions are defined in Table 13 and Table 14.

Reading and writing the session registers via I²C can only be done via the READ and WRITE registers operation - see Section 9.8.

All information provided in this document is subject to legal disclaimers.

© NXP Semiconductors N.V. 2016. All rights reserved.

Table 13. Configuration bytes

Bit	Field	Access via NFC	Access via I²C	Default values	Description
Configuration register: NC_REG					
7	NFCS_I2C_RST_ON_OFF	R&W	R&W	0b	Enables the NFC silence feature and enables soft reset through I²C repeated start - see Section 9.3
6	PTHRU_ON_OFF	R%&W	R&W	0b	1b: pass-through mode using SRAM enabled and SRAM mapped to end of Sector 0. 0b: pass-through mode disabled
5-4	FD_OFF	R&W	R&W	00b	defines the event upon which the signal output on the FD pin is pulled up 00b: if the field is switched off 01b: if the field is switched off or the tag is set to the HALT state 10b: if the field is switched off or the last page of the NDEF message has been read (defined in LAST_NDEF_BLOCK) 11b: (if FD_ON = 11b) if the field is switched off or if last data is read by I²C (in pass-through mode NFC ---> I²C) or last data is written by I²C (in pass-through mode I²C---> NFC) 11b: (if FD_ON = 00b or 01b or 10b) if the field is switched off See Section 8.4 for more details
3-2	FD_ON	R&W	R&W	00b	defines the event upon which the signal output on the FD pin is pulled down 00b: if the field is switched on 01b: by first valid start of communication (SoC) 10b: by selection of the tag 11b: (in pass-through mode NFC-->I²C) if the data is ready to be read from the I²C interface 11b: (in pass-through mode I²C--> NFC) if the data is read by the NFC interface See Section 8.4 for more details
1	SRAM_MIRROR_ON_OFF	R&W	R&W	0b	1b: SRAM mirror enabled and mirrored SRAM starts at page SRAM_MIRROR_BLOCK 0b: SRAM mirror disabled
0	TRANSFER_DIR	R&W	R&W	1b	defines the data flow direction for the data transfer 0b: From I²C to NFC interface 1b: From NFC to I²C interface In case the pass-through mode is not enabled 0b: no WRITE access from the NFC side

All information provided in this document is subject to legal disclaimers.

© NXP Semiconductors N.V. 2016. All rights reserved.

Table 13. *…continued* **Configuration bytes**

Bit	Field	Access via NFC	Access via I²C	Default values	Description
Configuration register: LAST_NDEF_BLOCK					
7-0	LAST_NDEF_BLOCK	R&W	R&W	00h	I²C block address of I²C block, which contains last byte(s) of stored NDEF message. An NFC read of the last page of this I²C block sets the register NDEF_DATA_READ to 1b and triggers field detection pin if FD_OFF is set to 10b. Valid range starts from 01h (NFC page 04h) up to 37h (NFC page DCh) for NTAG I²C *plus* 1k or up to 7Fh (NFC page FCh on Sector 1) for NTAG I²C *plus* 2k.
Configuration register: SRAM_MIRROR_BLOCK					
7-0	SRAM_MIRROR_BLOCK	R&W	R&W	F8h	I²C block address of SRAM when mirrored into the User memory. Valid range starts from 01h (NFC page 04h) up to 34h (NFC page D0h) for NTAG I²C *plus* 1k or up to 7Ch (NFC page F0h on memory Sector 1) for NTAG I²C *plus* 2k
Configuration register: WDT_LS					
7-0	WDT_LS	R&W	R&W	48h	Least Significant byte of watchdog time control register
Configuration register: WDT_MS					
7-0	WDT_MS	R&W	R&W	08h	Most Significant byte of watchdog time control register. When writing WDT_MS byte, the content of WDT_MS and WDT_LS gets active for the watchdog timer.
Configuration register: I2C_CLOCK_STR					
7-1	RFU	READ	READ	0000000b	RFU - all 7 bits locked to 0b
0	I2C_CLOCK_STR	R&W	R&W	1b	Enables (1b) or disable (0b) the I²C clock stretching
Configuration register: REG_LOCK					
7-2	RFU	READ	READ	000000b	RFU - all 6 bits locked to 0b
1	REG_LOCK_I2C[1]	R&W	R&W	0b	I²C Configuration Lock Bit 0b: Configuration bytes may be changed via I²C 1b: Configuration bytes can not be changed via I²C Once set to 1b, cannot be reset to 0b anymore.
0	REG_LOCK_NFC[1]	R&W	R&W	0b	NFC Configuration Lock Bit 0b: Configuration bytes may be changed via NFC 1b… Configuration bytes can not be changed via NFC Once set to 1b, cannot be reset to 0b anymore.

[1] Setting both bits REG_LOCK_I2C and REG_LOCK_NFC to 1b, permanently locks write access to register default values (as no write is allowed anymore). As long as one bit is still 0b, the corresponding interface can still access and change the register lock bytes.

All information provided in this document is subject to legal disclaimers.

© NXP Semiconductors N.V. 2016. All rights reserved.

Table 14. Session register bytes

Bit	Field	Access via NFC	Access via I²C	Default values	Description
Session register: NC_REG					
7	NFCS_I2C_RST_ON_OFF	READ	R&W	-	see configuration bytes description
6	PTHRU_ON_OFF	READ	R&W	-	see configuration bytes description, the bit is cleared automatically, when on of the interfaces is OFF:
5-4	FD_OFF	READ	R&W	-	see configuration bytes description
3-2	FD_ON	READ	R&W		
1	SRAM_MIRROR_ON_OFF	READ	R&W	-	see configuration bytes description, the bit is cleared automatically, when there is no Vcc power.
0	TRANSFER_DIR	READ	R&W		see configuration bytes description
Session register: LAST_NDEF_BLOCK					
7-0	LAST_NDEF_BLOCK	READ	R&W	-	see configuration bytes description
Session register: SRAM_MIRROR_BLOCK					
7-0	SRAM_MIRROR_BLOCK	READ	R&W	-	see configuration bytes description
Session register: WDT_LS					
7-0	WDT_LS	READ	R&W	-	see configuration bytes description
Session register: WDT_MS					
7-0	WDT_MS	READ	R&W	-	see configuration bytes description
Session register: I2C_CLOCK_STR					
7-2	RFU	READ	READ	-	RFU, all 6 bits locked to 0b
1	NEG_AUTH_REACHED	READ	READ	0b	Status bit to show the number of negative PWD_AUTH attempts reached 0b: PWD_AUTH still possible 1b: PWD_AUTH locked
0	I2C_CLOCK_STR	READ	READ	-	See configuration bytes description
Session register: NS_REG					
7	NDEF_DATA_READ	READ	READ	0b	1b: all data bytes read from the address specified in LAST_NDEF_BLOCK. Bit is reset to 0b when read
6	I2C_LOCKED	READ	R&W	0b	1b: Memory access is locked to the I²C interface
5	RF_LOCKED	READ	READ	0b	1b: Memory access is locked to the NFC interface
4	SRAM_I2C_READY	READ	READ	0b	1b: data is ready in SRAM buffer to be read by I2C
3	SRAM_RF_READY	READ	READ	0b	1b: data is ready in SRAM buffer to be read by NFC
2	EEPROM_WR_ERR	READ	R&W	0b	1b: HV voltage error during EEPROM write or erase cycle Needs to be written back via I²C to 0b to be cleared
1	EEPROM_WR_BUSY	READ	READ	0b	1b: EEPROM write cycle in progress - access to EEPROM disabled 0b: EEPROM access possible
0	RF_FIELD_PRESENT	READ	READ	0b	1b: NFC field is detected

All information provided in this document is subject to legal disclaimers.

© NXP Semiconductors N.V. 2016. All rights reserved.

8.4 Configurable Event Detection Pin

The event detection feature provides the capability to trigger an external device (e.g. μController) or switch on the connected circuitry by an external power management unit depending on activities on the NFC interface.

The conditions for the activation of the field detection signal defined with FD_ON can be:

- The presence of the NFC field
- The detection of a valid command (Start of Communication)
- The selection of the IC

The conditions for the de-activation of the field detection signal defined with FD_OFF can be:

- The absence of the NFC field
- The detection of the HALT state
- The NFC interface has read the last part of the NDEF message defined with LAST_NDEF_BLOCK

All the various combinations of configurations are described in Table 13 and illustrated in Figure 13, Figure 14 and Figure 15 for all various combinations of the filed detection signal configuration. The timing diagrams are not in scale and all given timing values are typical values.

The field detection pin can also be used as a handshake mechanism in the pass-through mode to signal to the external μController if

- New data is written to SRAM on the NFC interface
- Data written to SRAM from the μController is read via the NFC interface.

See Section 11 for more information on this handshake mechanism.

In Figure 12 an example how to connect the FD pin is given. All given values are typical values and may vary from application to application.

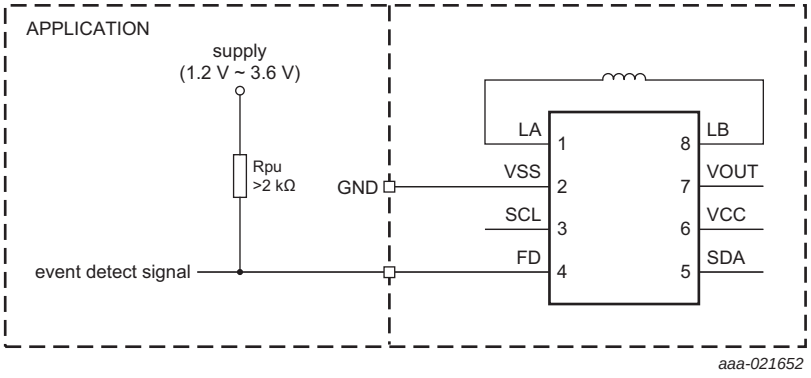

Fig 12. FD pin example circuit

All information provided in this document is subject to legal disclaimers.

© NXP Semiconductors N.V. 2016. All rights reserved.

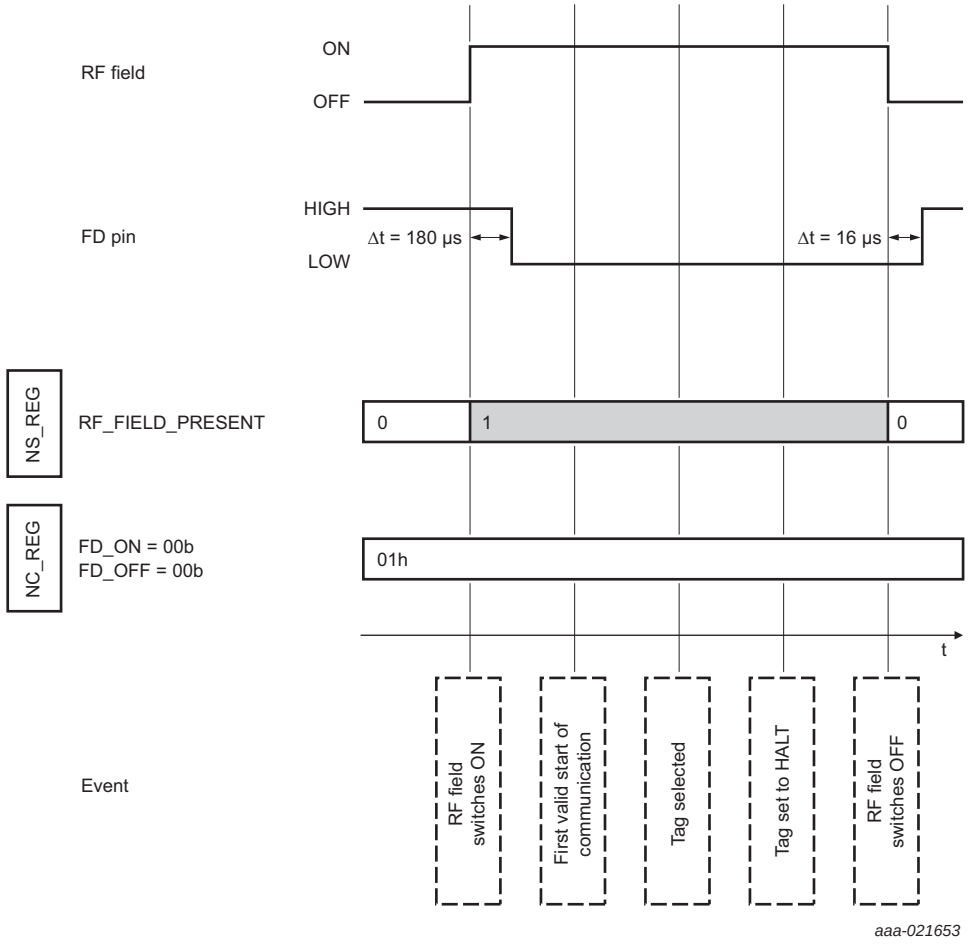

Fig 13. Illustration of the field detection feature when configured for simple field detection

All information provided in this document is subject to legal disclaimers.

© NXP Semiconductors N.V. 2016. All rights reserved.

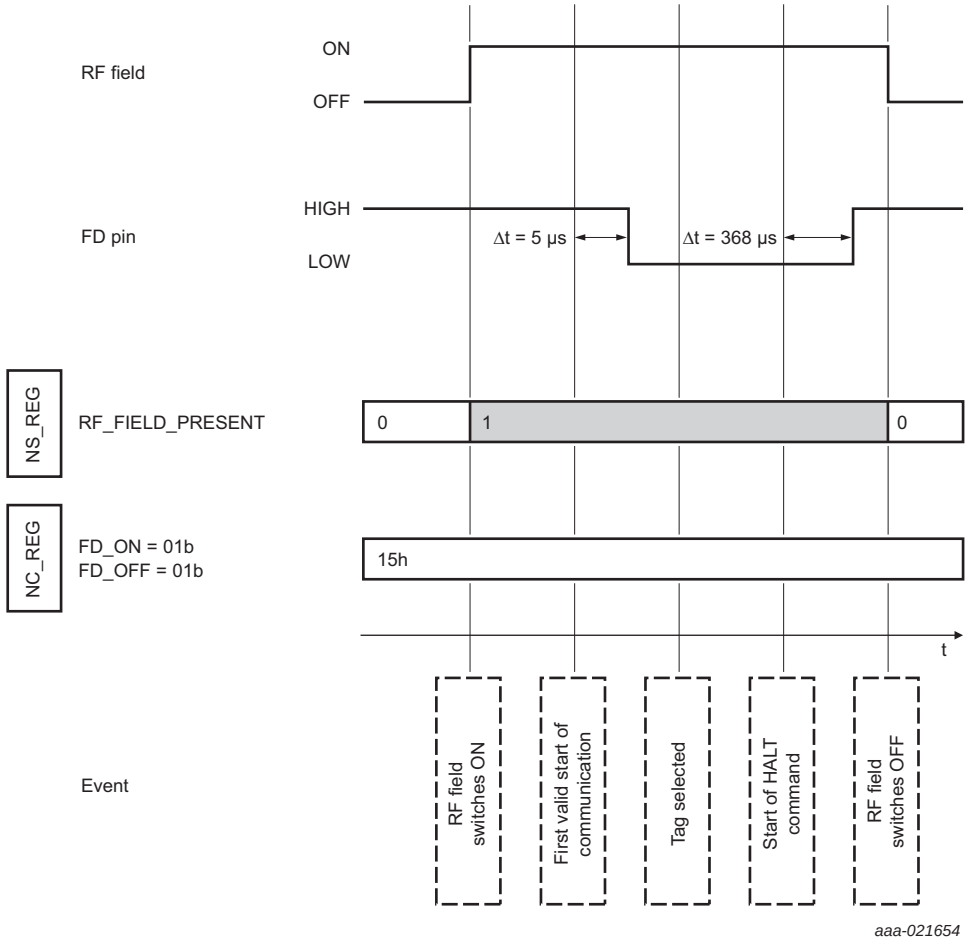

Fig 14. Illustration of the field detection feature when configured for first valid start of communication detection

All information provided in this document is subject to legal disclaimers.

© NXP Semiconductors N.V. 2016. All rights reserved.

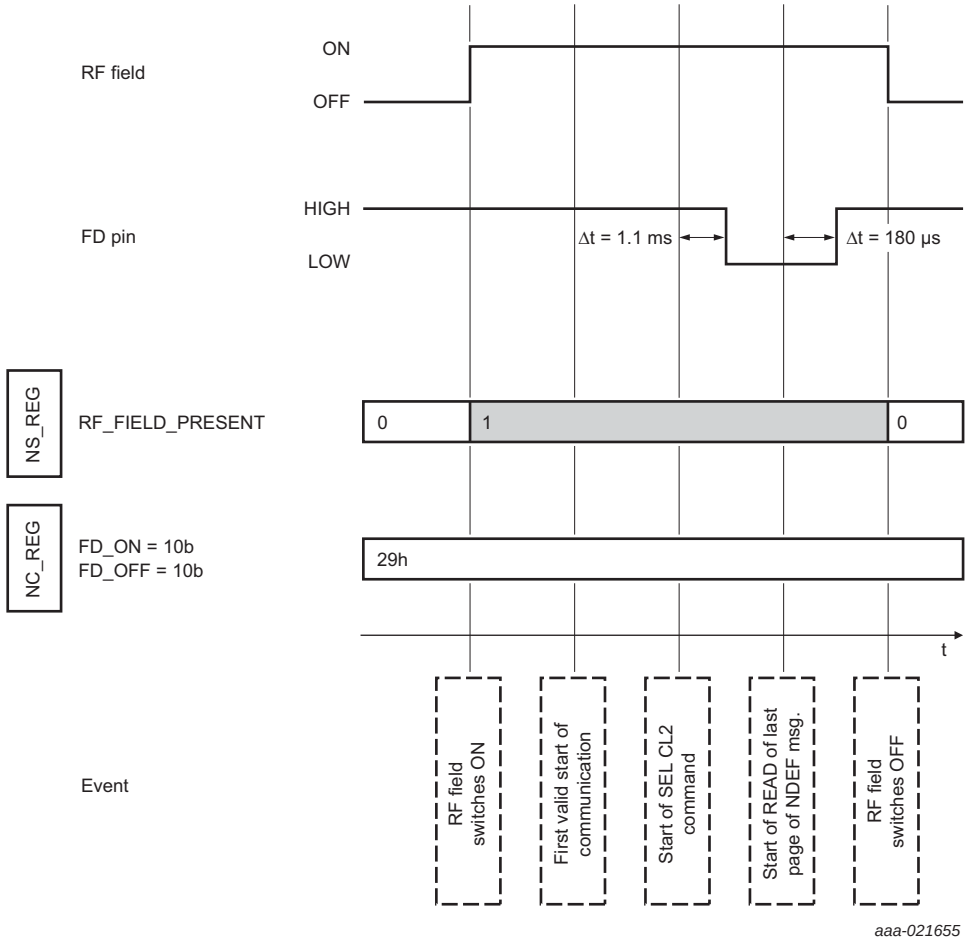

Fig 15. Illustration of the field detection feature when configured for selection of the tag detection

All information provided in this document is subject to legal disclaimers.

© NXP Semiconductors N.V. 2016. All rights reserved.

8.5 Watchdog timer

In order to allow the I²C interface to perform all necessary commands (READ, WRITE, ..), the memory access remains locked to the I²C interface until the register I2C_LOCKED is cleared by the host - see Table 14.

However, to avoid that the memory stays 'locked' to the I²C for a long period of time, it is possible to program a watchdog timer to unlock the I²C host from the tag, so that the NFC device can access the tag after a period of time of inactivity. The host itself will not be notified of this event directly, but the NS_REG register is updated accordingly (the register bit I2C_LOCKED will be cleared - see Table 14).

The default value is set to 20 ms (848h), but the watch dog timer can be freely set from 0001h (9.43 μs) up to FFFFh (617.995 ms). The timer starts ticking when the communication between the NTAG I²C and the I²C interface starts. In case the communication with the I²C is still going on after the watchdog timer expires, the communication will continue until the communication has completed. Then the status register I2C_LOCKED will be immediately cleared.

In the case where the communication with the I²C interface has completed before the end of the timer and the status register I2C_LOCKED was not cleared by the host, it will be cleared at the end of the watchdog timer.

The watchdog timer is only effective if the VCC pin is powered and will be reset and stopped if the NTAG I²C is not VCC powered or if the register status I2C_LOCKED is set to 0 and RF_LOCKED is set to 1.

8.6 Energy harvesting

The NTAG I²C *plus* provides the capability to supply external low-power devices with energy harvested from the NFC field of an NFC device as illustrated in Figure 16. All given values are typical values. For more details refer to Ref. 7.

The voltage and current from the energy harvesting depend on various parameters, such as the strength of the NFC field, the tag antenna size, or the distance from the NFC device. NTAG I²C *plus* provides typically 5 mA at 2 V on the VOUT pin with an NFC Phone.

Operating NTAG I²C in energy harvesting mode requires a number of precautions:

- A complete total connected capacitor in the range of typically 150 nF up to 220 nF maximum shall be connected between VOUT and GND close to the terminals to ensure that the voltage does not drop below VCC min during modulation or during any application operation.
- Start up load current on VOUT should be limited until sufficient voltage is built on VOUT.
- If NTAG I²C also powers the I²C bus, then VCC must be connected to VOUT, and pull-up resistors on the SCL and SDA pins must be sized to control SCL and SDA sink current when those lines are pulled low by NTAG I²C or the I²C host
- If NTAG I²C also powers the Field Detect bus, then the pull-up resistor on the Field Detect line must be sized to control the sink current into the Field Detect pin when NTAG I²C pulls it low

All information provided in this document is subject to legal disclaimers.

© NXP Semiconductors N.V. 2016. All rights reserved.

- The NFC reader device communicating with NTAG I²C shall apply polling cycles including an NFC Field Off condition of at least 5.1 ms as defined in NFC Forum Activity specification (see Ref. 4, chapter 6).

Note that increasing the output current on the V_{out} decreases the NFC communication range.

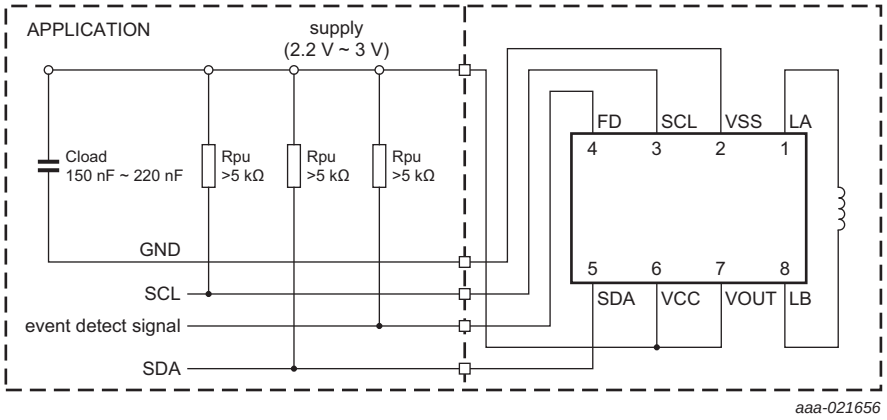

Fig 16. Energy harvesting example circuit

All information provided in this document is subject to legal disclaimers.

© NXP Semiconductors N.V. 2016. All rights reserved.

8.7 Password authentication

The memory write or read/write access to a configurable part of the memory can be constrained to a positive password authentication. The 32-bit secret password (PWD) and the 16-bit password acknowledge (PACK) response shall be typically programmed into the configuration pages at the tag personalization stage.

The AUTHLIM parameter specified in Section 8.3.11 can be used to limit the negative authentication attempts.

In the initial state of NTAG I²C *plus*, password protection is disabled by an AUTH0 value of FFh. PWD and PACK are freely writable in this state. Access to the configuration pages and any part of the user memory can be restricted by setting AUTH0 to a page address within the available memory space. This page address is the first one protected.

For a comprehensive description of all protection mechanism refer to Ref. 9.

Remark: The password protection method provided in NTAG I²C *plus* has to be intended as an easy and convenient way to prevent unauthorized memory accesses. If a higher level of protection is required, cryptographic methods can be implemented at application layer to increase overall system security.

8.7.1 Programming of PWD and PACK

The 32-bit PWD and the 16-bit PACK need to be programmed into the configuration pages, see Section 8.3.11. The password as well as the password acknowledge are written LSByte first. This byte order is the same as the byte order used during the PWD_AUTH command and its response.

The PWD and PACK bytes can never be read out of the memory. Instead of transmitting the real value on any valid read command from both - NFC and I²C - interface, only 00h bytes are replied.

If the password authentication is disabled, PWD and PACK can be written at any time.

If the password authentication is enabled, PWD and PACK can be written after a successful PWD_AUTH command only.

Remark: To improve the overall system security, it is advisable to diversify the password and the password acknowledge using a die individual parameter of the IC, which is the 7-byte UID available on NTAG I²C *plus*.

All information provided in this document is subject to legal disclaimers.

© NXP Semiconductors N.V. 2016. All rights reserved.

8.7.2 Limiting negative verification attempts

To prevent brute-force attacks on the password, the maximum allowed number of negative password authentication attempts can be set using AUTHLIM. This mechanism is disabled by setting AUTHLIM to a value of 000b, which is also the initial state of NTAG I²C *plus*.

If AUTHLIM is not equal to 000b, each negative authentication verification is internally counted. As soon as this internal counter reaches the number $2^{AUTHLIM}$, any further negative password authentication leads to a permanent locking of the protected part of the memory for the specified access modes. Independently, whether the provided password is correct or not, each subsequent PWD_AUTH fails.

Any successful password verification, before reaching the limit of negative password verification attempts, resets the internal counter to zero.

8.7.3 Protection of configuration segments

The configuration pages can be protected by the password authentication as well. The protection level is defined with the NFC_PROT bit.

The protection is enabled by setting the AUTH0 byte (see Table 10) to a value that is within the addressable memory space.

8.8 Originality signature

NTAG I²C *plus* features a cryptographically supported originality check. With this feature, it is possible to verify that the tag is using an IC manufactured by NXP Semiconductors. This check can be performed on personalized tags as well.

NTAG I²C *plus* digital signature is based on standard Elliptic Curve Cryptography (ECC), according to the ECDSA algorithm. The use of a standard algorithm and curve ensures easy software integration of the originality check procedure in an application running on an NFC device without specific hardware requirements.

Each NTAG I²C *plus* UID is signed with an NXP private key and the resulting 32-byte signature is stored in a hidden part of the NTAG I²C *plus* memory during IC production.

This signature can be retrieved using the READ_SIG command and can be verified in the NFC device by using the corresponding ECC public key provided by NXP. In case the NXP public key is stored in the NFC device, the complete signature verification procedure can be performed offline.

To verify the signature (for example with the use of the public domain crypto library OpenSSL) the tool domain parameters shall be set to secp128r1, defined within the standards for elliptic curve cryptography SEC (Ref. 10).

Details on how to check the signature value are provided in corresponding application note (Ref. 6). It is foreseen to offer not only offline, as well as online way to verify originality of NTAG I²C *plus*.

All information provided in this document is subject to legal disclaimers.

© NXP Semiconductors N.V. 2016. All rights reserved.

9. I²C commands

For details about I²C interface refer to Ref. 3.

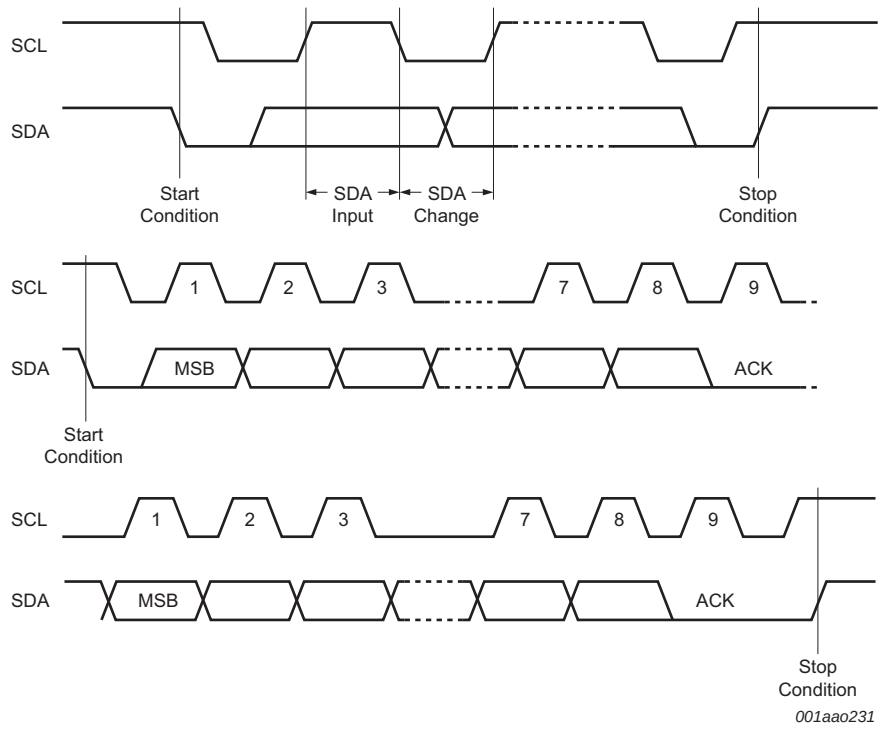

Fig 17. I²C bus protocol

The NTAG I²C *plus* supports the I²C protocol. This protocol is summarized in Figure 17. Any device that sends data onto the bus is defined as a transmitter, and any device that reads the data from the bus is defined as a receiver. The device that controls the data transfer is known as the “bus master”, and the other as the “slave” device. A data transfer can only be initiated by the bus master, which will also provide the serial clock for synchronization. The NTAG I²C *plus* is always a slave in all communications.

9.1 Start condition

Start is identified by a falling edge of Serial Data (SDA), while Serial Clock (SCL) is stable in the high state. A Start condition must precede any data transfer command. The NTAG I²C *plus* continuously monitors SDA (except during a Write cycle) and SCL for a Start condition, and will not respond unless one is given.

9.2 Stop condition

Stop is identified by a rising edge of SDA while SCL is stable and driven high. A Stop condition terminates communication between the NTAG I²C *plus* and the bus master. A Stop condition at the end of a Write command triggers the internal Write cycle.

All information provided in this document is subject to legal disclaimers.

© NXP Semiconductors N.V. 2016. All rights reserved.

9.3 I²C soft reset and NFC silence feature

With the bit NFCS_I2C_RST_ON_OFF (see Table 13) NTAG I²C *plus* enables two features: a soft reset of the I²C sub-system, and NFC silence, in which the NFC demodulator is disabled.

The I²C soft reset feature interprets an I²C repeated start (no I²C stop in between) as a command to execute a soft reset of the I²C sub-system. This is useful when heavy bus interference can cause the I²C interface to get stuck. A drawback of this feature is that every start symbol then has to be terminated with a Stop, slowing down communication. If a Stop is forgotten, the I²C interface is cleared and previous communication, if any, is lost. Consequently when this feature is used, stop conditions after MEMA for READ/WRITE (see Figure 18) and after REGA for READ/WRITE registers (see Figure 19) shall be send.

The NFC silence feature disables the demodulator. When feature is set, no NFC commands are received, and no replies are issued to commands that were not fully received when NFC Silence was set. This feature allows the tag to “disappear” even if it still is in the reader field. NTAG I²C *plus* will remain in the ISO state it was in when NFC silence was enabled, until NFC silence is removed.

The combination of these two features in a single bit means that I²C soft reset is only active during NFC silence.

9.4 Acknowledge bit (ACK)

The acknowledge bit is used to indicate a successful byte transfer. The bus transmitter, whether it is the bus master or slave device, releases Serial Data (SDA) after sending eight bits of data. During the ninth clock pulse period, the receiver pulls Serial Data (SDA) low to acknowledge the receipt of the 9th data bits.

9.5 Data input

During data input, the NTAG I²C *plus* samples SDA on the rising edge of SCL. For correct device operation, SDA must be stable during the rising edge of SCL, and the SDA signal must change only when SCL is driven low.

9.6 Addressing

To start communication between a bus master and the NTAG I²C *plus* slave device, the bus master must initiate a Start condition. Following this initiation, the bus master sends the device address. The NTAG I²C address from I²C consists of a 7-bit device identifier (see Table 15 for default value).

The 8th bit is the Read/Write bit (RW). This bit is set to 1b for Read and 0b for Write operations.

If a match occurs on the device address, the NTAG I²C *plus* gives an acknowledgment on SDA during the 9th bit time. If the NTAG I²C *plus* does not match the device select code, it deselects itself from the bus and clears the register I2C_LOCKED (see Table 12).

Table 15. Default NTAG I²C address from I²C

	Device address							**R/W**
	b7	b6	b5	b4	b3	b2	b1	b0
Value	1[1]	0[1]	1[1]	0[1]	1 [1]	0 [1]	1 [1]	1/0

All information provided in this document is subject to legal disclaimers.

© NXP Semiconductors N.V. 2016. All rights reserved.

[1] Initial values - can be changed.

The I²C address of the NTAG I²C (byte 0 - block 0h) can only be modified by the I²C interface. Both interfaces have no READ access to this address and a READ command from the NFC or I²C interface to this byte will only return 04h (manufacturer ID for NXP Semiconductors - see Figure 7).

All information provided in this document is subject to legal disclaimers.

© NXP Semiconductors N.V. 2016. All rights reserved.

9.7 READ and WRITE Operation

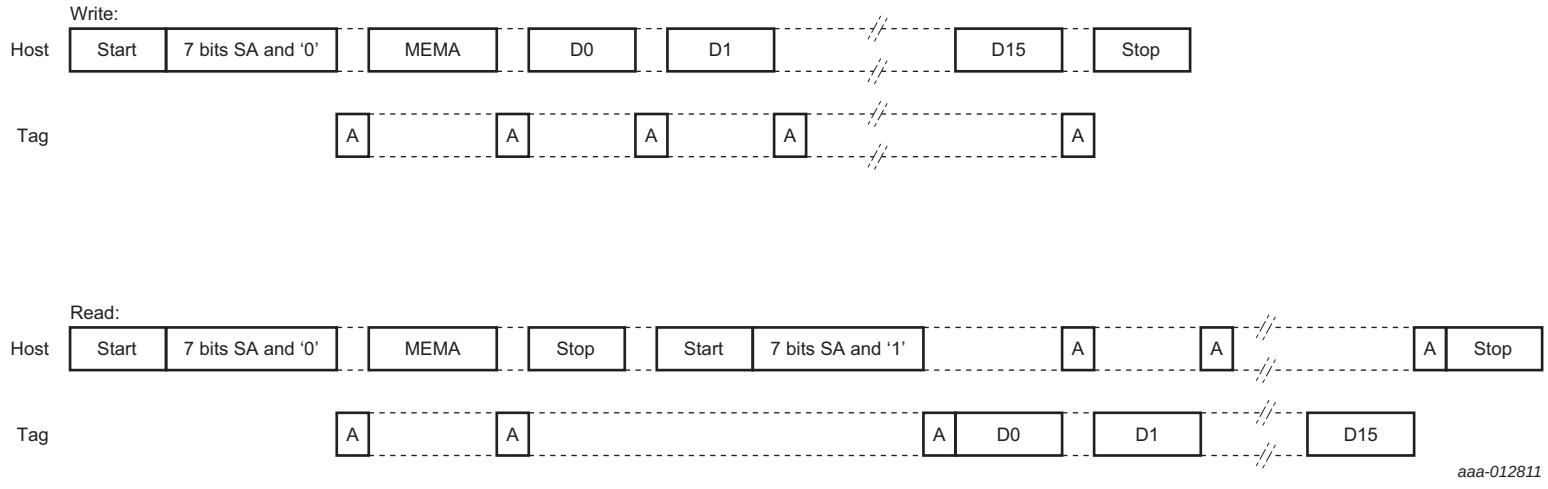

Fig 18. I²C READ and WRITE operation

All information provided in this document is subject to legal disclaimers.

© NXP Semiconductors N.V. 2016. All rights reserved.

The READ and WRITE operation handle always 16 bytes to be read or written (one block - see Table 6)

For the READ operation (see Figure 18), following a Start condition, the bus master/host sends the NTAG I²C slave address code (SA - 7 bits) with the Read/Write bit (RW) reset to 0. The NTAG I²C *plus* acknowledges this (A), and waits for one address byte (MEMA), which should correspond to the address of the block of memory (SRAM or EEPROM) that is intended to be read. The NTAG I²C *plus* responds to a valid address byte with an acknowledge (A). A Stop condition can be then issued. Then the host again issues a start condition followed by the NTAG I²C *plus* slave address with the Read/Write bit set to 1b. When I2C_CLOCK_STR is set to 0b, a pause of at least 50 µs shall be kept before this start condition. The NTAG I²C *plus* acknowledges this (A) and sends the first byte of data read (D0).The bus master/host acknowledges it (A) and the NTAG I²C *plus* will subsequently transmit the following 15 bytes of memory read with an acknowledge from the host after every byte. After the last byte of memory data has been transmitted by the NTAG I²C *plus*, the bus master/host will acknowledge it and issue a Stop condition.

For the WRITE operation (see Figure 18), following a Start condition, the bus master/host sends the NTAG I²C *plus* slave address code (SA - 7 bits) with the Read/Write bit (RW) reset to 0. The NTAG I²C *plus* acknowledges this (A), and waits for one address byte (MEMA), which should correspond to the address of the block of memory (SRAM or EEPROM) that is intended to be written. The NTAG I²C *plus* responds to a valid address byte with an acknowledge (A) and, in the case of a WRITE operation, the bus master/host starts transmitting each 16 bytes (D0...D15) that shall be written at the specified address with an acknowledge of the NTAG I²C *plus* after each byte (A). After the last byte acknowledge from the NTAG I²C *plus*, the bus master/host issues a Stop condition.

The memory address accessible via the READ and WRITE operations can only correspond to the EEPROM or SRAM (respectively 00h to 3Ah or F8h to FBh for NTAG I²C *plus* 1k and 00h to 7Ah or F8h to FBh for NTAG I²C *plus* 2k).

All information provided in this document is subject to legal disclaimers.

© NXP Semiconductors N.V. 2016. All rights reserved.

9.8 WRITE and READ register operation

In order to modify or read the session register bytes (see Table 14), NTAG I²C *plus* requires the WRITE and READ register operation (see Figure 19).

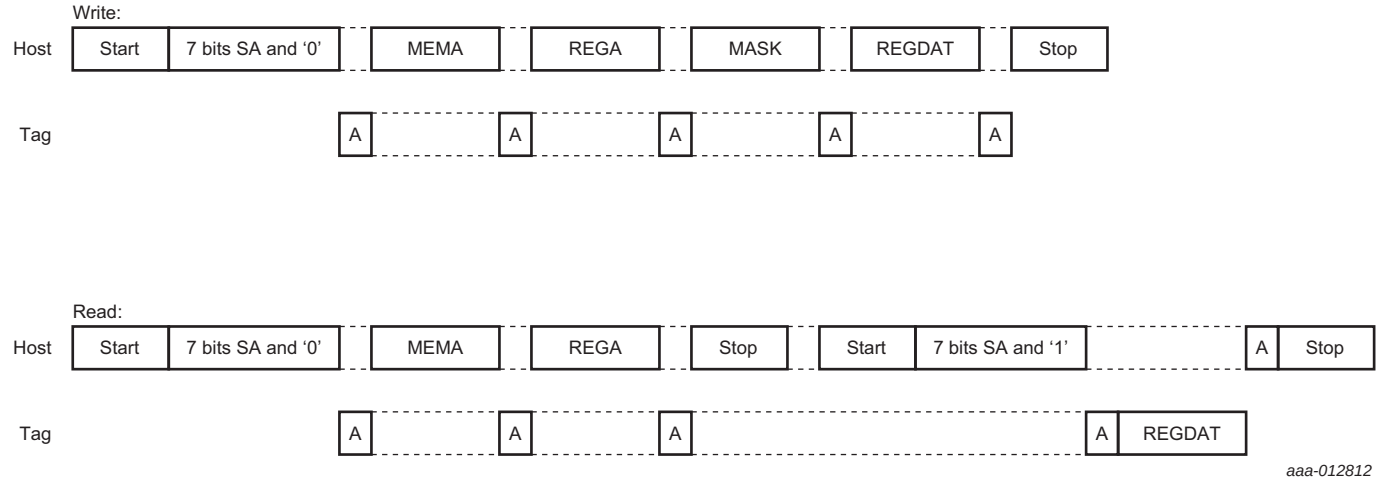

Fig 19. WRITE and READ register operation

All information provided in this document is subject to legal disclaimers.

© NXP Semiconductors N.V. 2016. All rights reserved.

For the READ register operation, following a Start condition the bus master/host sends the NTAG I²C *plus* slave address code (SA - 7 bits) with the Read/Write bit (RW) reset to 0. The NTAG I²C *plus* acknowledges this (A), and waits for one address byte (MEMA) which corresponds to the address of the block of memory with the session register bytes (FEh). The NTAG I²C *plus* responds to the address byte with an acknowledge (A). Then the bus master/host issues a register address (REGA), which corresponds to the address of the targeted byte inside the block FEh (00h, 01h...to 07h) and then waits for the Stop condition.

Then the bus master/host again issues a start condition followed by the NTAG I²C *plus* slave address with the Read/Write bit set to 1b. The NTAG I²C *plus* acknowledges this (A), and sends the selected byte of session register data (REGDAT) within the block FEh. The bus master/host will acknowledge it and issue a Stop condition.

For the WRITE register operation, following a Start condition, the bus master/host sends the NTAG I²C *plus* slave address code (SA - 7 bits) with the Read/Write bit (RW) reset to 0. The NTAG I²C *plus* acknowledges this (A), and waits for one address byte (MEMA), which corresponds to the address of the block of memory within the session register bytes (FEh). After the NTAG I²C *plus* acknowledge (A), the bus master/host issues a register address (REGA), which corresponds to the address of the targeted byte inside the block FEh (00h, 01h...to 07h). After acknowledgement (A) by NTAG I²C *plus*, the bus master/host issues a MASK byte that defines exactly which bits shall be modified by a 1b bit value at the corresponding bit position. Following the NTAG I²C *plus* acknowledge (A), the new register data (one byte - REGDAT) to be written is transmitted by the bus master/host. The NTAG I²C *plus* acknowledges it (A), and the bus master/host issues a stop condition.

All information provided in this document is subject to legal disclaimers.

© NXP Semiconductors N.V. 2016. All rights reserved.

10. NFC Command

NTAG activation follows the ISO/IEC 14443-3 Type A specification. After NTAG I²C *plus* has been selected, it can either be deactivated using the ISO/IEC 14443 HALT command, or NTAG commands (e.g. READ_SIG, PWD_AUTH, SECTOR_SELECT, READ or WRITE) can be performed. For more details about the card activation refer to Ref. 2.

10.1 NTAG I²C *plus* command overview

All available commands for NTAG I²C *plus* are shown in Table 16.

Table 16. Command overview

Command[1]	ISO/IEC 14443	NFC FORUM	Command code (hexadecimal)
Request	REQA	SENS_REQ	26h (7 bit)
Wake-up	WUPA	ALL_REQ	52h (7 bit)
Anticollision CL1	Anticollision CL1	SDD_REQ CL1	93h 20h
Select CL1	Select CL1	SEL_REQ CL1	93h 70h
Anticollision CL2	Anticollision CL2	SDD_REQ CL2	95h 20h
Select CL2	Select CL2	SEL_REQ CL2	95h 70h
Halt	HLTA	SLP_REQ	50h 00h
GET_VERSION	-	-	60h
READ	-	READ	30h
FAST_READ	-	-	3Ah
WRITE	-	WRITE	A2h
FAST_WRITE	-	-	A6h
SECTOR_SELECT	-	SECTOR_SELECT	C2h
PWD_AUTH	-	-	1Bh
READ_SIG	-	-	3Ch

[1] Unless otherwise specified, all commands use the coding and framing as described in Ref. 1.

10.2 Timing

The command and response timing shown in this document are not to scale and values are rounded to 1 µs.

All given command and response times refer to the data frames, including start of communication and end of communication. They do not include the encoding (like the Miller pulses). An NFC device data frame contains the start of communication (1 “start bit”) and the end of communication (one logic 0 + 1-bit length of unmodulated carrier). An NFC tag data frame contains the start of communication (1 “start bit”) and the end of communication (1-bit length of no subcarrier).

The minimum command response time is specified according to Ref. 1 as an integer n, which specifies the NFC device to NFC tag frame delay time. The frame delay time from NFC tag to NFC device is at least 87 µs. The maximum command response time is specified as a time-out value. Depending on the command, the T_{ACK} value specified for command responses defines the NFC device to NFC tag frame delay time. It does it for either the 4-bit ACK value specified or for a data frame.

All information provided in this document is subject to legal disclaimers.

© NXP Semiconductors N.V. 2016. All rights reserved.

All timing can be measured according to the ISO/IEC 14443-3 frame specification as shown for the Frame Delay Time in Figure 20. For more details refer to Ref. 2.

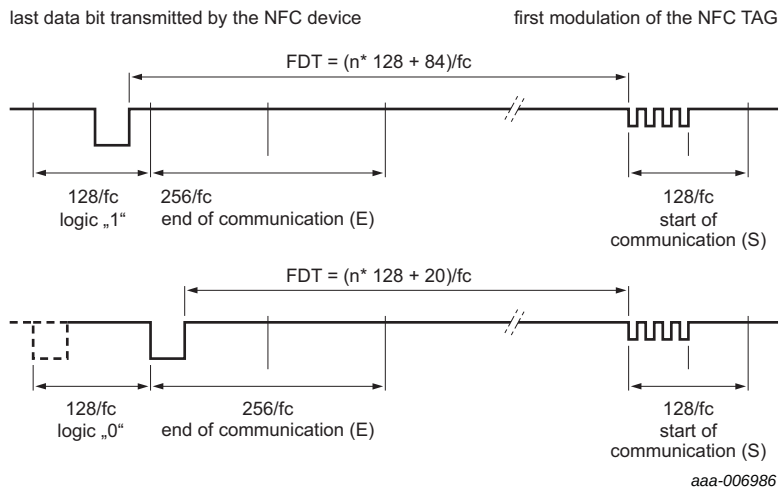

Fig 20. Frame Delay Time (from NFC device to NFC tag), T_{ACK} and T_{NAK}

Remark: Due to the coding of commands, the measured timings usually excludes (a part of) the end of communication. Consider this factor when comparing the specified with the measured times.

10.3 NTAG ACK and NAK

NTAG I²C *plus* uses a 4-bit ACK / NAK as shown in Table 17.

Table 17. ACK and NAK values

Code (4 bit)	ACK/NAK
Ah	Acknowledge (ACK)
0h	NAK for invalid argument (i.e. invalid page address or wrong password)
1h	NAK for parity or CRC error
3h	NAK for Arbiter locked to I²C
4h	Number of negative PWD_AUTH command limit reached
7h	NAK for EEPROM write error

10.4 ATQA and SAK responses

NTAG I²C *plus* replies to a REQA or WUPA command with the ATQA value shown in Table 18. It replies to a Select CL2 command with the SAK value shown in Table 19. The 2-byte ATQA value is transmitted with the least significant byte first (44h).

Table 18. ATQA response of the NTAG I²C *plus*

		Bit number															
Sales type	**Hex value**	**16**	**15**	**14**	**13**	**12**	**11**	**10**	**9**	**8**	**7**	**6**	**5**	**4**	**3**	**2**	**1**
NTAG I²C *plus*	00 44h	0	0	0	0	0	0	0	0	0	1	0	0	0	1	0	0

All information provided in this document is subject to legal disclaimers.

© NXP Semiconductors N.V. 2016. All rights reserved.

Table 19. SAK response of the NTAG I²C *plus*

		Bit number							
Sales type	**Hex value**	**8**	**7**	**6**	**5**	**4**	**3**	**2**	**1**
NTAG I²C *plus*	00h	0	0	0	0	0	0	0	0

Remark: The ATQA coding in bits 7 and 8 indicate the UID size according to ISO/IEC 14443 independent from the settings of the UID usage.

Remark: The bit numbering in the ISO/IEC 14443 specification starts with LSB = bit 1 and not with LSB = bit 0. So 1 byte counts bit 1 to bit 8 instead of bit 0 to bit 7.

10.5 GET_VERSION

The GET_VERSION command is used to retrieve information about the NTAG family, the product version, storage size and other product data required to identify the specific NTAG I²C *plus*.

This command is also available on other NTAG products to have a common way of identifying products across platforms and evolution steps.

The GET_VERSION command has no arguments and returns the version information for the specific NTAG I²C *plus* type. The command structure is shown in Figure 21 and Table 20.

Table 21 shows the required timing.

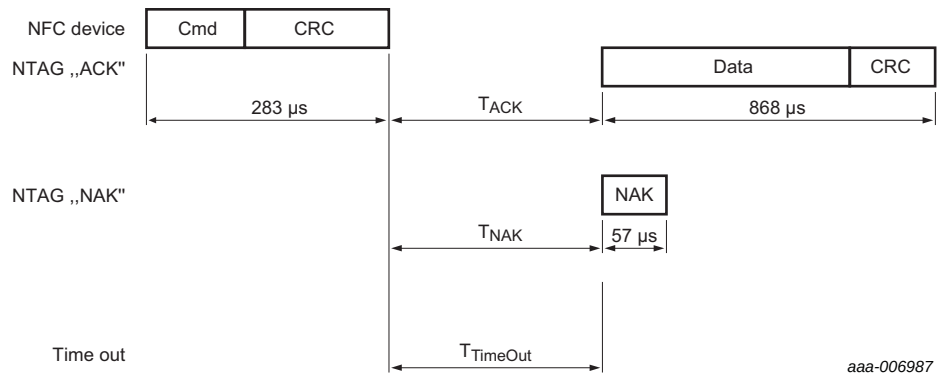

Fig 21. GET_VERSION command

Table 20. GET_VERSION command

Name	Code	Description	Length
Cmd	60h	Get product version	1 byte
CRC	-	CRC according to Ref. 1	2 bytes
Data	-	Product version information	8 bytes
NAK	see Table 17	see Section 10.3	4 bit

All information provided in this document is subject to legal disclaimers.

© NXP Semiconductors N.V. 2016. All rights reserved.

Table 21. GET_VERSION timing

These times exclude the end of communication of the NFC device.

	$T_{ACK/NAK}$ min	$T_{ACK/NAK}$ max	$T_{TimeOut}$
GET_VERSION	n=9[1]	$T_{TimeOut}$	5 ms

[1] Refer to Section 10.2 “Timing”.

Table 22. GET_VERSION response for NTAG I²C *plus* 1k and 2k

Byte no.	Description	NTAG I²C *plus* 1k	NTAG I²C *plus* 2k	Interpretation
0	fixed Header	00h	00h	
1	vendor ID	04h	04h	NXP Semiconductors
2	product type	04h	04h	NTAG
3	product subtype	05h	05h	50 pF I²C, Field detection
4	major product version	02h	02h	2
5	minor product version	02h	02h	V2
6	storage size	13h	15h	see following information
7	protocol type	03h	03h	ISO/IEC 14443-3 compliant

The most significant 7 bits of the storage size byte are interpreted as an unsigned integer value n. As a result, it codes the total available user memory size as 2^n. If the least significant bit is 0b, the user memory size is exactly 2^n. If the least significant bit is 1b, the user memory size is between 2^n and 2^{n+1}.

The user memory for NTAG I²C *plus* 1k is 888 bytes. This memory size is between 512 bytes and 1024 bytes. Therefore, the most significant 7 bits of the value 13h are 0001001b, which means n = 9, and the least significant bit is 1b.

The user memory for NTAG I²C *plus* 2k is 1912 bytes. This memory size is between 1024 bytes and 2048 bytes. Therefore, the most significant 7 bits of the value 15h are 0001010b, which means n = 10, and the least significant bit is 1b.

10.6 READ_SIG

The READ_SIG command returns an IC specific, 32-byte ECC signature, to verify NXP Semiconductors as the silicon vendor. The signature is programmed at chip production and cannot be changed afterwards. The command structure is shown in Figure 24 and Table 27.

Table 28 shows the required timing.

All information provided in this document is subject to legal disclaimers.

© NXP Semiconductors N.V. 2016. All rights reserved.

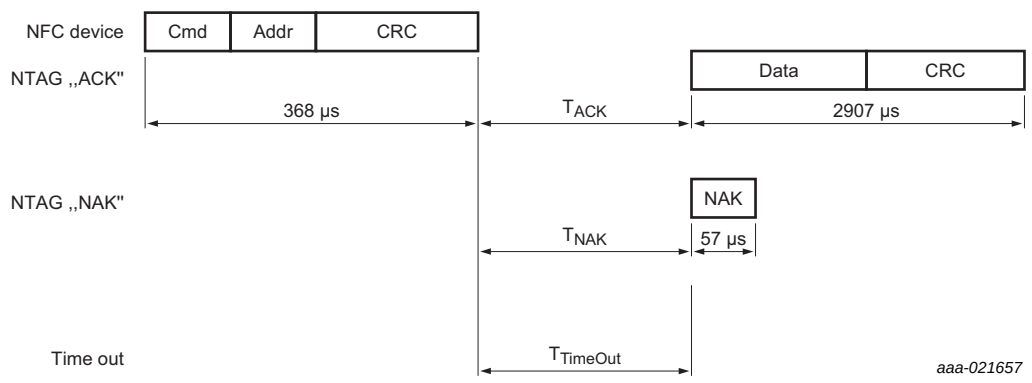

Fig 22. READ_SIG command

Table 23. READ_SIG command

Name	Code	Description	Length
Cmd	3Ch	read ECC signature	1 byte
Addr	00h	RFU, is set to 00h	1 byte
CRC	-	CRC according to Ref. 1	2 bytes
Signature	-	ECC Signature	32 bytes
NAK	see Table 17	see Section 10.3	4 bit

Table 24. READ_SIG timing

These times exclude the end of communication of the NFC device.

	$T_{ACK/NAK}$ min	$T_{ACK/NAK}$ max	$T_{TimeOut}$
READ_SIG	n=9[1]	$T_{TimeOut}$	5 ms

[1] Refer to Section 10.2 “Timing”.

Details on how to check the signature value are provided in the corresponding Application note. It is foreseen to offer an online and offline way to verify originality of NTAG I²C *plus*.

All information provided in this document is subject to legal disclaimers.

© NXP Semiconductors N.V. 2016. All rights reserved.

10.7 PWD_AUTH

A protected memory area can be accessed only after a successful password verification using the PWD_AUTH command. The AUTH0 configuration byte defines the start of the protected area. It specifies the first page that the password mechanism protects. The level of protection can be configured using the NFC_PROT bit either for write protection or read/write protection. The PWD_AUTH command takes the password as parameter and, if successful, returns the password authentication acknowledge, PACK. By setting the AUTHLIM configuration bits to a value larger than 000b, the number of unsuccessful password verifications can be limited. Each unsuccessful authentication is then counted. After reaching the limit ($2^{AUTHLIM}$) of unsuccessful attempts, the memory write access or the memory access at all (specified in NFC_PROT) to the protected area, is no longer possible. The PWD_AUTH command is shown in Figure 23 and Table 25.

Table 26 shows the required timing.

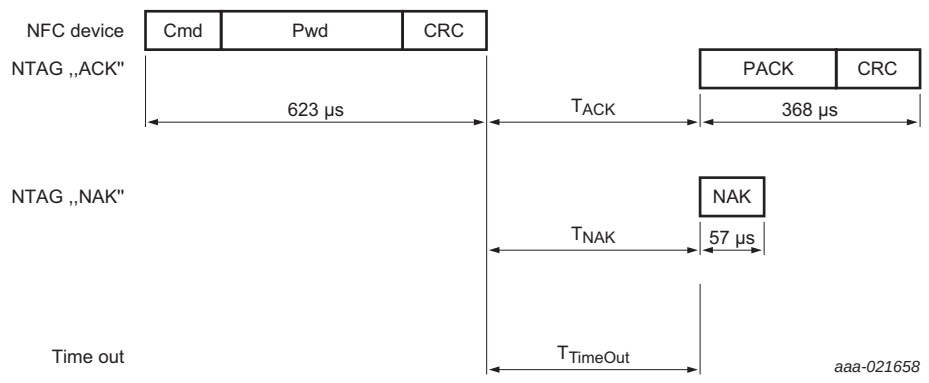

Fig 23. PWD_AUTH command

Table 25. PWD_AUTH command

Name	Code	Description	Length
Cmd	1Bh	password authentication	1 byte
Pwd	-	password	4 bytes
CRC	-	CRC according to Ref. 2	2 bytes
PACK	-	password authentication acknowledge	2 bytes
NAK	see Table 17	see Section 10.3	4-bit

Table 26. PWD_AUTH timing

These times exclude the end of communication of the NFC device.

	$T_{ACK/NAK}$ min	$T_{ACK/NAK}$ max	$T_{TimeOut}$
PWD_AUTH	n=9[1]	$T_{TimeOut}$	5 ms

[1] Refer to Section 10.2 “Timing”.

Remark: It is strongly recommended to change - and diversify for each tag - the password and PACK from its delivery state at tag issuing.

All information provided in this document is subject to legal disclaimers.

© NXP Semiconductors N.V. 2016. All rights reserved.

10.8 READ

The READ command requires a start page address, and returns the 16 bytes of four NTAG I²C *plus* pages. For example, if address (Addr) is 03h then pages 03h, 04h, 05h, 06h are returned. Special conditions apply if the READ command address is near the end of the accessible memory area. For details on those cases and the command structure refer to Figure 24 and Table 27.

Table 28 shows the required timing.

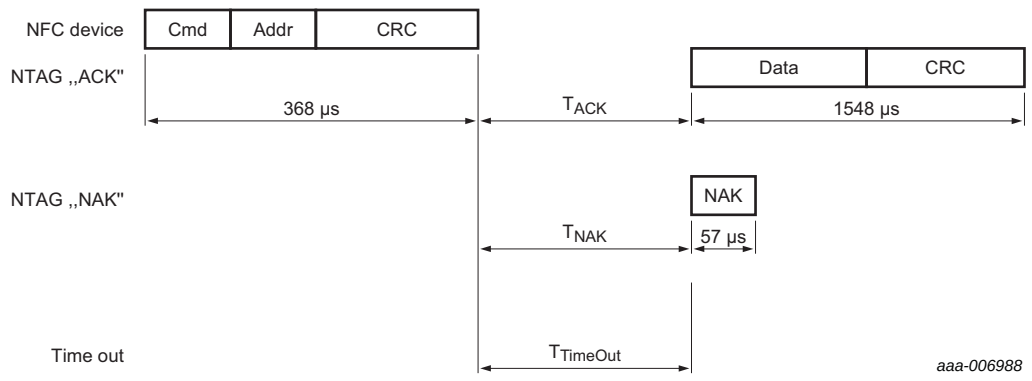

Fig 24. READ command

Table 27. READ command

Name	Code	Description	Length
Cmd	30h	read four pages	1 byte
Addr	-	start page address	1 byte
CRC	-	CRC according to Ref. 1	2 bytes
Data	-	Data content of the addressed pages	16 bytes
NAK	see Table 17	see Section 10.3	4 bit

Table 28. READ timing

These times exclude the end of communication of the NFC device.

	$T_{ACK/NAK}$ min	$T_{ACK/NAK}$ max	$T_{TimeOut}$
READ	n=9[1]	$T_{TimeOut}$	5 ms

[1] Refer to Section 10.2 “Timing”.

In the initial state of NTAG I²C *plus*, all memory pages are allowed as Addr parameter to the READ command:

- Page address from 00h to E9h and pages ECh and EDh for NTAG I²C *plus* 1k and 2k
- Page address from 00h to FFh (Sector 1)for NTAG I²C *plus* 2k only
- SRAM buffer address when pass-through mode is enabled

Addressing a start memory page beyond the limits above results in a NAK response from NTAG I²C *plus*.

In case a READ command addressing start with a valid memory area but extends over an invalid memory area, the content of the invalid memory area will be reported as 00h.

All information provided in this document is subject to legal disclaimers.

© NXP Semiconductors N.V. 2016. All rights reserved.

10.9 FAST_READ

The FAST_READ command requires a start page address and an end page address and returns all n*4 bytes of the addressed pages. For example, if the start address is 03h and the end address is 07h, then pages 03h, 04h, 05h, 06h and 07h are returned.

For details on those cases and the command structure, refer to Figure 25 and Table 29.

Table 30 shows the required timing.

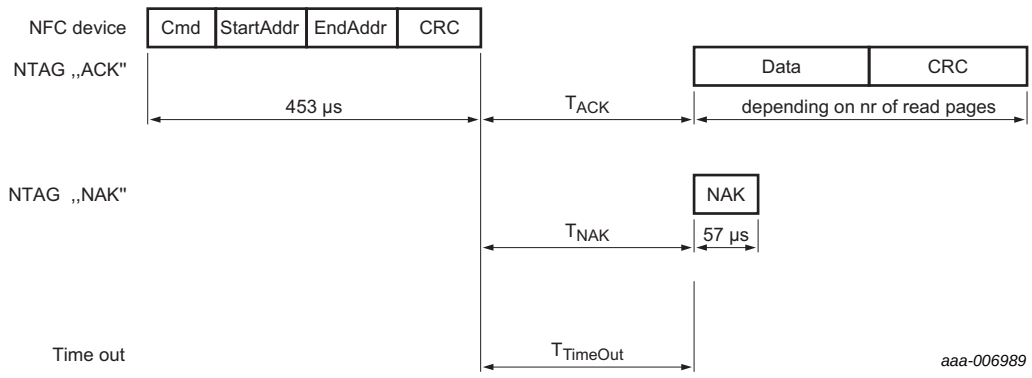

Fig 25. FAST_READ command

Table 29. FAST_READ command

Name	Code	Description	Length
Cmd	3Ah	read multiple pages	1 byte
StartAddr	-	start page address	1 byte
EndAddr	-	end page address	1 byte
CRC	-	CRC according to Ref. 1	2 bytes
Data	-	data content of the addressed pages	n*4 bytes
NAK	see Table 17	see Section 10.3	4 bit

Table 30. FAST_READ timing

These times exclude the end of communication of the NFC device.

	$T_{ACK/NAK}$ min	$T_{ACK/NAK}$ max	$T_{TimeOut}$
FAST_READ	n=9[1]	$T_{TimeOut}$	5 ms

[1] Refer to Section 10.2 “Timing”.

In the initial state of NTAG I²C *plus*, all memory pages are allowed as StartAddr parameter to the FAST_READ command:

- Page address from 00h to E9h and pages ECh and EDh for NTAG I²C *plus* 1k and 2k
- Page address from 00h to FFh (Sector 1) for NTAG I²C *plus* 2k only
- SRAM buffer address when pass-through mode is enabled

If the start addressed memory page (StartAddr) is outside of accessible area, NTAG I²C *plus* replies a NAK.

All information provided in this document is subject to legal disclaimers.

© NXP Semiconductors N.V. 2016. All rights reserved.

In case the FAST_READ command starts with a valid memory area but extends over an invalid memory area, the content of the invalid memory area will be reported as 00h.

The EndAddr parameter must be equal to or higher than the StartAddr.

Remark: The FAST_READ command is able to read out the entire memory of one sector with one command. Nevertheless, the receive buffer of the NFC device must be able to handle the requested amount of data as no chaining is possible.

10.10 WRITE

The WRITE command requires a page address, and writes 4 bytes of data into the addressed NTAG I²C *plus* page. The WRITE command is shown in Figure 26 and Table 31.

Table 32 shows the required timing.

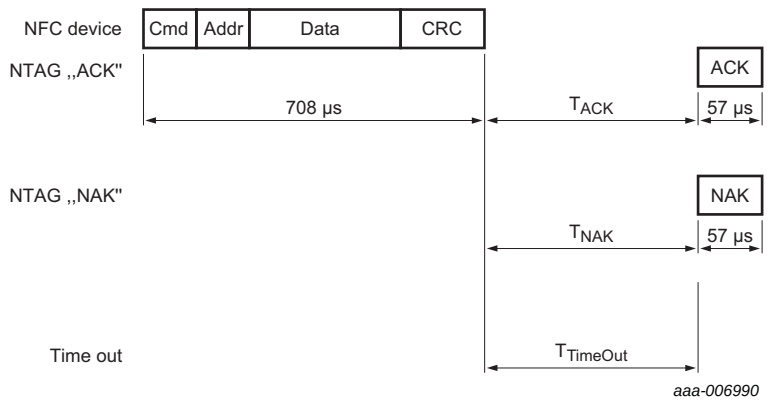

Fig 26. WRITE command

Table 31. WRITE command

Name	Code	Description	Length
Cmd	A2h	write one page	1 byte
Addr	-	page address	1 byte
Data	-	data	4 bytes
CRC	-	CRC according to Ref. 1	2 bytes
NAK	see Table 17	see Section 10.3	4 bit

Table 32. WRITE timing

These times exclude the end of communication of the NFC device.

	$T_{ACK/NAK}$ min	$T_{ACK/NAK}$ max	$T_{TimeOut}$
WRITE	n=9[1]	$T_{TimeOut}$	5 ms

[1] Refer to Section 10.2 “Timing”.

In the initial state of NTAG I²C *plus*, the following memory pages are valid Addr parameters to the WRITE command:

- Page address from 02h to E9h(Sector 0) for NTAG I²C *plus* 1k and 2k

All information provided in this document is subject to legal disclaimers.

© NXP Semiconductors N.V. 2016. All rights reserved.

- Page address from 00h to FFh (Sector 1) for NTAG I²C *plus* 2k
- SRAM buffer addresses when pass-through mode is enabled

Addressing a memory page beyond the limits above results in a NAK response from NTAG I²C *plus*.

Pages that are locked against writing cannot be reprogrammed using any write command. The locking mechanisms include static and dynamic lock bits, as well as the locking of the configuration pages.

10.11 FAST_WRITE

The FAST_WRITE allows to write data in ACTIVE state to the complete SRAM (64 bytes) in pass-through mode, and requires the start block address (0xF0), end address (0xFF) and writes 64 bytes of data into the NTAG I²C *plus* SRAM. The FAST_WRITE command is shown in Figure 26 and Table 31.

Table 32 shows the required timing.

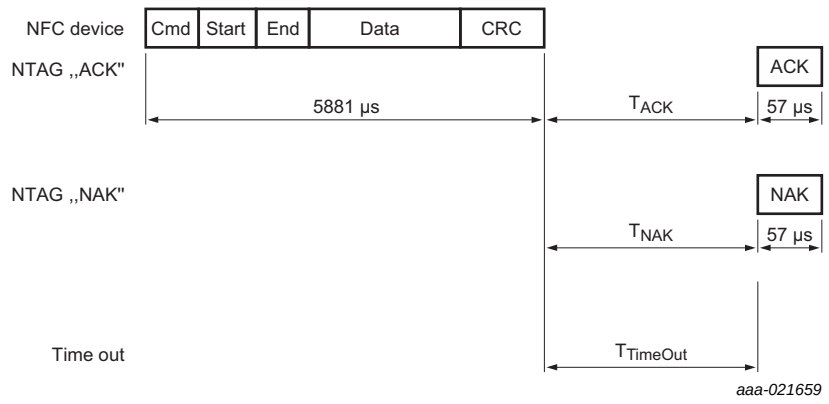

Fig 27. FAST_WRITE command

Table 33. FAST_WRITE command

Name	Code	Description	Length
Cmd	A6h	write complete SRAM	1 byte
START_ADDR	F0h	start SRAM in pass-through mode	1 byte
END_ADDR	FFh	end SRAM in pass-through mode	1 byte
Data	-	data	64 bytes
-	CRC	CRC according to Ref. 1	2 bytes
ACK	see Table 17	see Section 10.3	4 bit
NAK	see Table 17	see Section 10.3	4 bit

Table 34. FAST_WRITE timing

These times exclude the end of communication of the NFC device.

	$T_{ACK/NAK}$ min	$T_{ACK/NAK}$ max	$T_{TimeOut}$
FAST_WRITE	n=9[1]	$T_{TimeOut}$	5 ms

[1] Refer to Section 10.2 “Timing”.

All information provided in this document is subject to legal disclaimers.

© NXP Semiconductors N.V. 2016. All rights reserved.

10.12 SECTOR SELECT

The SECTOR SELECT command consists of two commands packet: the first one is the SECTOR SELECT command (C2h), FFh and CRC. Upon an ACK answer from the Tag, the second command packet needs to be issued with the related sector address to be accessed and 3 bytes RFU.

To successfully access to the requested memory sector, the tag shall issue a passive ACK, which is sending NO REPLY for more than 1 ms after the CRC of the second command set.

The SECTOR SELECT command is shown in Figure 28 and Table 35.

Table 36 shows the required timing.

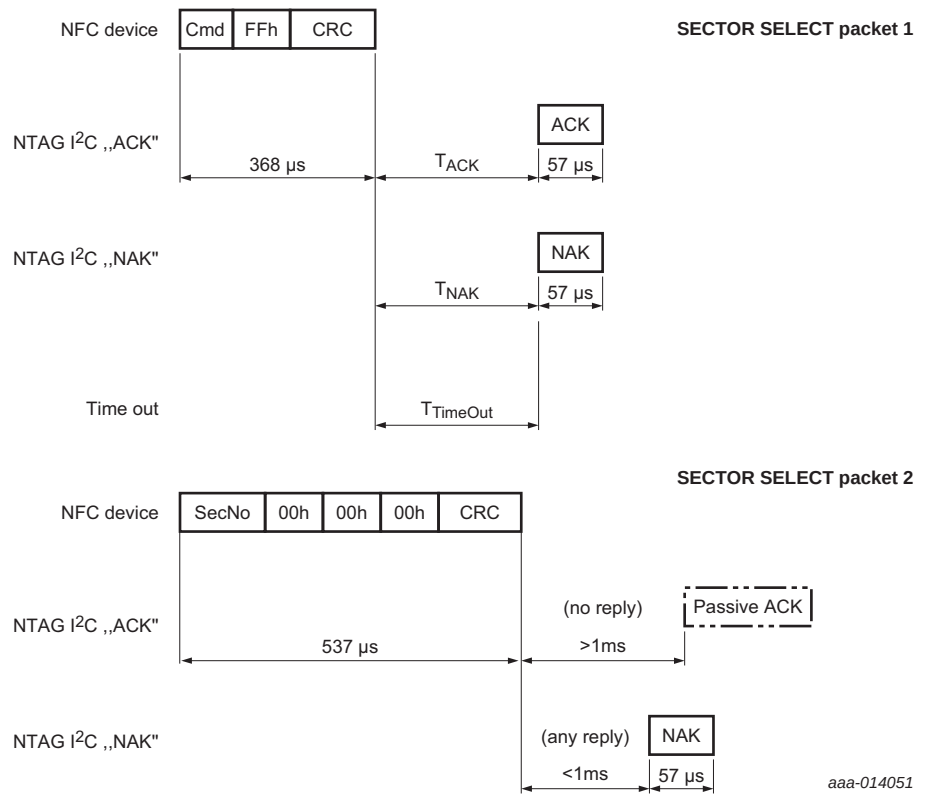

Fig 28. SECTOR_SELECT command

Table 35. SECTOR_SELECT command

Name	Code	Description	Length
Cmd	C2h	sector select	1 byte
FFh	-		1 byte
CRC	-	CRC according to Ref. 1	2 bytes
SecNo	-	Memory sector to be selected (00h - FEh)	1 byte
NAK	see Table 17	see Section 10.3	4 bit

All information provided in this document is subject to legal disclaimers.

© NXP Semiconductors N.V. 2016. All rights reserved.

Table 36. SECTOR_SELECT timing

These times exclude the end of communication of the NFC device.

	$T_{ACK/NAK}$ min	$T_{ACK/NAK}$ max	$T_{TimeOut}$
SECTOR_SELECT	n=9[1]	$T_{TimeOut}$	5 ms

[1] Refer to Section 10.2 “Timing”.

All information provided in this document is subject to legal disclaimers.

© NXP Semiconductors N.V. 2016. All rights reserved.

11. Communication and arbitration between NFC and I²C interface

If both interfaces are powered by their corresponding source, only one interface shall have access to the memory according to the "first-come, first-serve" principle.

In NS_REG, the two status bits I2C_LOCKED and RF_LOCKED reflect the status of the NTAG I²C *plus* memory access and indicate which interface is locking the memory access. At power-on, both bits are 0, setting the arbitration in idle mode.

In the case arbiter locks to the I²C interface, an NFC device still can read the session registers. If the NFC state machine is in ACTIVE state, only the SECTOR SELECT command is allowed. But any other command requiring EEPROM access like READ or WRITE is handled as an illegal command and replied to with a special NAK value.

In the case where the memory access is locked to the NFC interface, the I²C host still can access the session register, by issuing a 'Register READ/WRITE' command. All other read or write commands will be replied to with a NACK to the I²C host.

11.1 Pass-through mode not activated

PTHRU_ON_OFF = 0b (see Table 14) indicates non-pass-through mode.

11.1.1 I²C interface access

If the tag is in the IDLE or HALT state (NFC state after POR or HALT-command) and the correct I²C slave address of NTAG I²C *plus* is received following the START condition, the bit I2C_LOCKED will be automatically set to 1b. If I2C_LOCKED = 1b, the I²C interface has access to the tag memory and the tag will respond with a NACK to any memory READ/WRITE command on the NFC interface other than reading the session register bytes command during this time.

I2C_LOCKED must be either reset to 0b at the end of the I²C sequence or will be cleared automatically after the end of the watch dog timer.

11.1.2 NFC interface access

The arbitration will allow the NFC interface read and write accesses to EEPROM only when I2C_LOCKED is set to 0b.

RF_LOCKED is automatically set to 1b if the tag receives a valid command (EEPROM Access Commands) on the NFC interface. If RF_LOCKED = 1b, the tag is locked to the NFC interface and will not respond to any command from the I²C interface other than READ register command (see Table 14).

RF_LOCKED is automatically set to 0b in one of the following conditions

- At POR or if the NFC field is switched off
- If the tag is set to the HALT state with a HALT command on the NFC interface
- If the memory access command is finished on the NFC interface

When the NFC interface has read the last page of the NDEF message specified in LAST_NDEF_BLOCK (see Table 13 and Table 14) the bit NDEF_DATA_READ - in the register NS_REG see Table 14 - is set to 1b and indicates to the I²C interface that, for example, new NDEF data can be written.

All information provided in this document is subject to legal disclaimers.

© NXP Semiconductors N.V. 2016. All rights reserved.

11.2 SRAM buffer mapping with Memory Mirror enabled

With SRAM_MIRROR_ON_OFF= 1b, the SRAM buffer mirroring is enabled. This mode cannot be combined with the pass-through mode (see Section 11.3).

With the memory mirror enabled, the SRAM is now mapped into the user memory from the NFC interface perspective using the SRAM mirror lower page address specified in SRAM_MIRROR_BLOCK byte (Table 13 and Table 14). See Table 37 (NTAG I²C *plus* 1k) and Table 38 (NTAG I²C *plus* 2k) for an illustration of this SRAM memory mapping when SRAM_MIRROR_BLOCK is set to 01h.

Password protection to this mapped SRAM may be enabled by enabling password authentication and setting SRAM_PROT bit to 1b.

The tag must be VCC powered to make this mode work, because without VCC, the SRAM will not be accessible via NFC powered only.

When mapping the SRAM buffer to the user memory, the user shall be aware that all data written into the SRAM will be lost once the NTAG I²C *plus* is no longer powered from the I²C side (as SRAM is a volatile memory).

All information provided in this document is subject to legal disclaimers.

© NXP Semiconductors N.V. 2016. All rights reserved.

Table 37. Illustration of the SRAM memory addressing via the NFC interface (with SRAM_MIRROR_ON_OFF set to 1b and SRAM_MIRROR_BLOCK set to 01h) for the NTAG I²C *plus* 1k

Sector address	Page address		Byte number within a page				Access cond. ACTIVE state	Access cond. AUTH. state
	Dec.	Hex.	0	1	2	3		
0	0	00h	Serial number				READ	
	1	01h	Serial number			Internal	READ	
	2	02h	Internal		Static lock bytes		READ/R&W	
	3	03h	Capability Container (CC)				READ&WRITE	
	4	04h	SRAM				READ&WRITE	
	...	...						
	19	13h						
	...	...	Unprotected user memory				READ&WRITE	
	AUTH0	AUTH0	Protected user memory				READ	READ&WRITE
	...	...						
	225	E1h						
	226	E2h	Dynamic lock bytes			00h	R&W/READ	
	227	E3h	RFU	RFU	RFU	AUTH0	READ	READ&WRITE
	228	E4h	ACCESS	RFU	RFU	RFU	READ	READ&WRITE
	229	E5h	PWD				READ	READ&WRITE
	230	E6h	PACK		RFU	RFU	READ	READ&WRITE
	231	E7h	PT_I2C	RFU	RFU	RFU	READ	READ&WRITE
	232	E8h	Configuration registers				see 8.3.12	
	233	E9h						
	234	EAh	Invalid access - returns NAK				n.a.	
	235	EBh						
	236	ECh	Session registers				see 8.3.12	
	237	EDh						
	238	EEh	Invalid access - returns NAK				n.a.	
	239	EFh						
	240	F0h	Invalid access - returns NAK				n.a.	
	...	...						
	255	FFh						
1	...	...	Invalid access - returns NAK				n.a.	
2	...	...	Invalid access - returns NAK				n.a.	
3	0	00h	Invalid access - returns NAK				n.a.	
	...	...						
	248	F8h	Session registers				see 8.3.12	
	249	F9h						
	...	...	Invalid access - returns NAK				n.a.	
	255	FFh						

All information provided in this document is subject to legal disclaimers.

© NXP Semiconductors N.V. 2016. All rights reserved.

Table 38. Illustration of the SRAM memory addressing via the NFC interface (with SRAM_MIRROR_ON_OFF set to 1b and SRAM_MIRROR_BLOCK set to 01h) for the NTAG I²C *plus* 2k

Sector address	Page address		Byte number within a page				Access cond. ACTIVE state	Access cond. AUTH. state
	Dec.	Hex.	0	1	2	3		
0	0	00h	Serial number				READ	
	1	01h	Serial number			Internal	READ	
	2	02h	Internal		Static lock bytes		READ/R&W	
	3	03h	Capability Container (CC)				READ&WRITE	
	4	04h	SRAM				READ&WRITE	
	...	...						
	19	13h						
	...	...	Unprotected user memory				READ&WRITE	
	AUTH0	AUTH0	Protected user memory				READ	READ&WRITE
	...	...						
	225	E1h						
	226	E2h	Dynamic lock bytes			00h	R&W/READ	
	227	E3h	RFU	RFU	RFU	AUTH0	READ	READ&WRITE
	228	E4h	ACCESS	RFU	RFU	RFU	READ	READ&WRITE
	229	E5h	PWD				READ	READ&WRITE
	230	E6h	PACK		RFU	RFU	READ	READ&WRITE
	231	E7h	PT_I2C	RFU	RFU	RFU	READ	READ&WRITE
	232	E8h	Configuration registers				see 8.3.12	
	233	E9h						
	234	EAh	Invalid access - returns NAK				n.a.	
	235	EBh						
	236	ECh	Session registers				see 8.3.12	
	237	EDh						
	238	EEh	Invalid access - returns NAK				n.a.	
	239	EFh						
	240	F0h	Invalid access - returns NAK				n.a.	
	...	...						
	255	FFh						
1	0	00h	(Un-)protected user memory				READ&WRITE	
	...	...						
	255	FFh						
2	...	...	Invalid access - returns NAK				n.a.	
3	0	00h	Invalid access - returns NAK				n.a.	
	...	...						
	248	F8h	Session registers				see 8.3.12	
	249	F9h						
	...	...	Invalid access - returns NAK				n.a.	
	255	FFh						

All information provided in this document is subject to legal disclaimers.

© NXP Semiconductors N.V. 2016. All rights reserved.

11.3 Pass-through mode

PTHRU_ON_OFF = 1b (see Table 14) enables and indicates pass-through mode.

Password protection for pass-through mode may be enabled by enabling password authentication and setting SRAM_PROT bit to 1b.

To handle large amount of data transfer from one interface to the other, NTAG I²C *plus* offers the pass-through mode where data is transferred via a 64 byte SRAM. This buffer offers fast write access and unlimited write endurance as well as an easy handshake mechanism between the two interfaces.

This buffer is mapped directly at the end of the Sector 0 of NTAG I²C *plus*.

In both directions, the principle of access to the SRAM buffer via the NFC and I²C interface is exactly the same (see Section 11.3.2 and Section 11.3.3).

The data flow direction must be set with the TRANSFER_DIR bit (see Table 14) within the current communication session using the session registers (in this case, it can only be set via the I²C interfaces) or for the configuration bits after POR (in this case both NFC and I²C interface can set it). This pass-through direction settings avoids locking the memory access during the data transfer from one interface to the SRAM buffer.

The pass-through mode can only be enabled via I²C interface when both interfaces are powered. The PTHRU_ON_OFF bit, located in the session registers NC_REG (see Section 8.3.12), needs to be set to 1b. In case one interface powers off, the pass-through mode is disabled automatically.

NTAG I²C *plus* introduces in addition to the FAST_READ command as FAST_WRITE command. With this new command in ACTIVE state whole SRAM can be written at once, which improves the total pass-through performance significantly.

For more information read related application note Ref. 8.

11.3.1 SRAM buffer mapping

In pass-through mode, the SRAM is mirrored to pages F0h to FFh Sector 0 of NTAG I²C *plus*.

The last page/block of the SRAM (page FFh) is used as the terminator page. Once the terminator page/block in the respective interfaces is read/written, the control would be transferred to other interface (NFC/I²C) - see Section 11.3.2 and Section 11.3.3 for more details.

Accordingly, the application can align on the reader and host side to transfer 16/32/48/64 bytes of data in one pass-through step by only using the last blocks/page of the SRAM buffer.

For best performance in addition to the FAST_READ, the FAST_WRITE command should be used.

All information provided in this document is subject to legal disclaimers.

© NXP Semiconductors N.V. 2016. All rights reserved.

Table 39. Illustration of the SRAM memory addressing via the NFC interface in pass-through mode (PTHRU_ON_OFF set to 1b) for the NTAG I²C 1k

Sector address	Page address		Byte number within a page				Access cond. ACTIVE state	Access cond. AUTH. state
	Dec.	Hex.	0	1	2	3		
0	0	00h	Serial number				READ	
	1	01h	Serial number			Internal	READ	
	2	02h	Internal		Static lock bytes		READ/R&W	
	3	03h	Capability Container (CC)				READ&WRITE	
	4	04h	Unprotected user memory				READ&WRITE	
	...	...						
	AUTH0	AUTH0	Protected user memory				READ	READ&WRITE
	...	...						
	225	E1h						
	226	E2h	Dynamic lock bytes			00h	R&W/READ	
	227	E3h	RFU	RFU	RFU	AUTH0	READ	READ&WRITE
	228	E4h	ACCESS	RFU	RFU	RFU	READ	READ&WRITE
	229	E5h	PWD				READ	READ&WRITE
	230	E6h	PACK		RFU	RFU	READ	READ&WRITE
	231	E7h	PT_I2C	RFU	RFU	RFU	READ	READ&WRITE
	232	E8h	Configuration registers				see 8.3.12	
	233	E9h						
	234	EAh	Invalid access - returns NAK				n.a.	
	235	EBh						
	236	ECh	Session registers				see 8.3.12	
	237	EDh						
	238	EEh	Invalid access - returns NAK				n.a.	
	239	EFh						
	240	F0h	SRAM				READ&WRITE	
	...	...						
	255	FFh						
1	...	...	Invalid access - returns NAK				n.a.	
2	...	...	Invalid access - returns NAK				n.a.	
3	0	00h	Invalid access - returns NAK				n.a.	
	...	...						
	248	F8h	Session registers				see 8.3.12	
	249	F9h						
	...	...	Invalid access - returns NAK				n.a.	
	255	FFh						

All information provided in this document is subject to legal disclaimers.

© NXP Semiconductors N.V. 2016. All rights reserved.

Table 40. Illustration of the SRAM memory addressing via the NFC interface in pass-through mode (PTHRU_ON_OFF set to 1b) for the NTAG I²C 2k

Sector address	Page address		Byte number within a page				Access cond. ACTIVE state	Access cond. AUTH. state
	Dec.	Hex.	0	1	2	3		
0	0	00h	Serial number				READ	
	1	01h	Serial number			Internal	READ	
	2	02h	Internal		Static lock bytes		READ/R&W	
	3	03h	Capability Container (CC)				READ&WRITE	
	4	04h	Unprotected user memory				READ&WRITE	
	...	...						
	AUTH0	AUTH0	Protected user memory				READ	READ&WRITE
	...	...						
	225	E1h						
	226	E2h	Dynamic lock bytes			00h	R&W/READ	
	227	E3h	RFU	RFU	RFU	AUTH0	READ	READ&WRITE
	228	E4h	ACCESS	RFU	RFU	RFU	READ	READ&WRITE
	229	E5h	PWD				READ	READ&WRITE
	230	E6h	PACK		RFU	RFU	READ	READ&WRITE
	231	E7h	PT_I2C	RFU	RFU	RFU	READ	READ&WRITE
	232	E8h	Configuration registers				see 8.3.12	
	233	E9h						
	234	EAh	Invalid access - returns NAK				n.a.	
	235	EBh						
	236	ECh	Session registers				see 8.3.12	
	237	EDh						
	238	EEh	Invalid access - returns NAK				n.a.	
	239	EFh						
	240	F0h	SRAM				READ&WRITE	
	...	...						
	255	FFh						
1	0	00h	(Un-)protected user memory				READ&WRITE	
	...	...						
	255	FFh						
2	...	...	Invalid access - returns NAK				n.a.	
3	0	00h	Invalid access - returns NAK				n.a.	
	...	...						
	248	F8h	Session registers				see 8.3.12	
	249	F9h						
	...	...	Invalid access - returns NAK				n.a.	
	255	FFh						

All information provided in this document is subject to legal disclaimers.

© NXP Semiconductors N.V. 2016. All rights reserved.

11.3.2 NFC to I²C Data transfer

If the NFC interface is enabled (RF_LOCKED = 1b) and data is written to the terminator page FFh of the SRAM via the NFC interface, at the end of the WRITE command, bit SRAM_I2C_READY is set to 1b and bit RF_LOCKED is set to 0b automatically, and the NTAG I²C *plus* is locked to the I²C interface.

To signal the host that data is ready to be read following mechanisms are in place:

- The host polls/reads bit SRAM_I2C_READY from NS_REG (see Table 14) to know if data is ready in SRAM
- A trigger on the FD pin indicates to the host that data is ready to be read from SRAM. This feature can be enabled by programming bits 5:2 (FD_OFF, FD_ON) of the NC_REG appropriately (see Table 13)

This is illustrated in the Figure 29.

If the tag is addressed with the correct I²C slave address, the I2C_LOCKED bit is automatically set to 1b (according to the interface arbitration). After a READ from the terminator page of the SRAM, bit SRAM_I2C_READY and bit I2C_LOCKED are automatically reset to 0b, and the tag returns to the arbitration idle mode where, for example, further data from the NFC interface can be transferred.

All information provided in this document is subject to legal disclaimers.

© NXP Semiconductors N.V. 2016. All rights reserved.

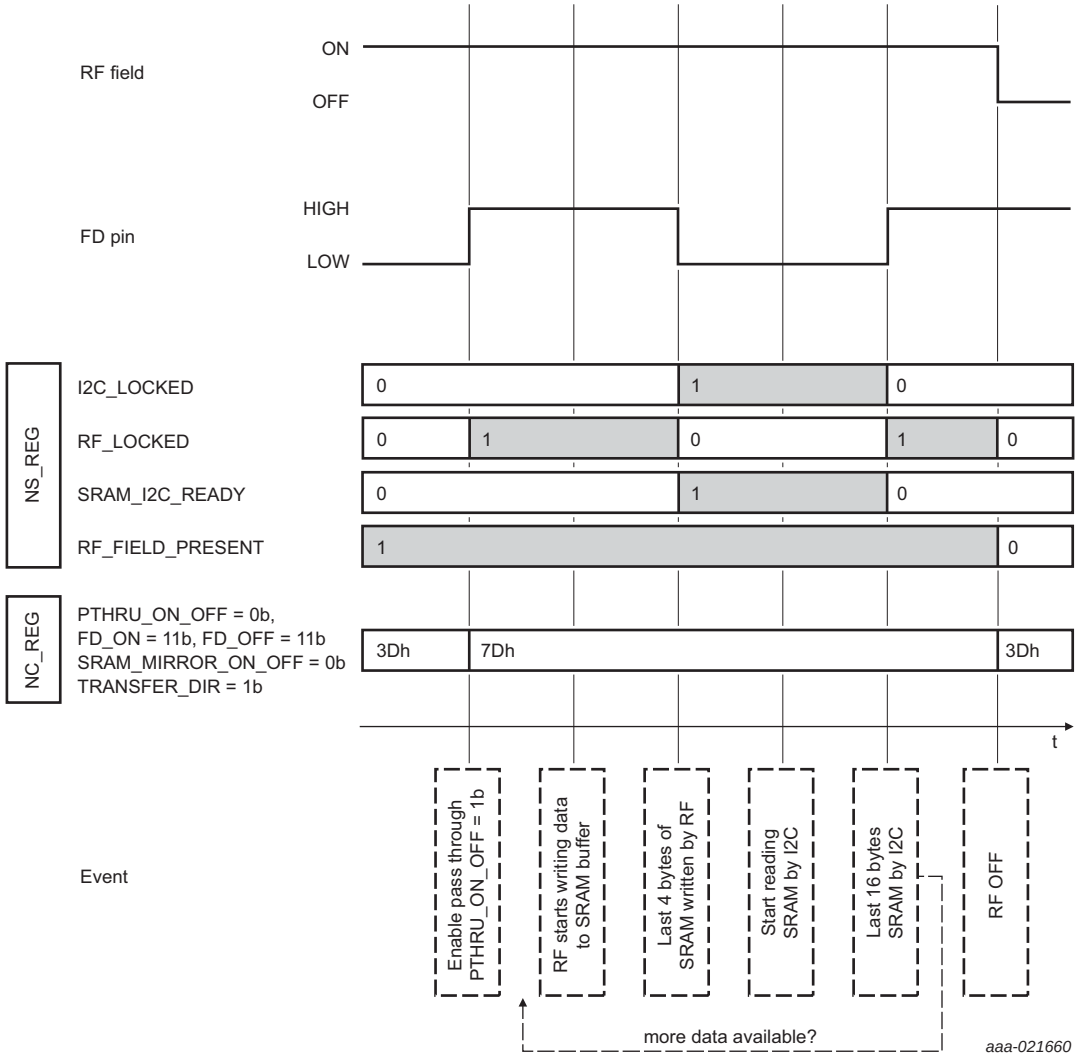

Fig 29. Illustration of the Field detection feature in combination with the pass-through mode for data transfer from NFC to I²C

11.3.3 I²C to NFC Data transfer

If the I²C interface is enabled (I2C_LOCKED is 1b) and data is written to the terminator block FBh of the SRAM via the I²C interface, at the end of the WRITE command, bit SRAM_RF_READY is set to 1b and bit I2C_LOCKED is automatically reset to 0b to set the tag in the arbitration idle state.

The RF_LOCKED bit is then automatically set to 1b (according to the interface arbitration). After a READ or FAST_READ command involving the terminator page of the SRAM, bit SRAM_RF_READY and bit RF_LOCKED are automatically reset to 0b allowing the I²C interface to further write data into the SRAM buffer.

To signal to the host that further data is ready to be written, the following mechanisms are in place:

All information provided in this document is subject to legal disclaimers.

© NXP Semiconductors N.V. 2016. All rights reserved.

- The NFC interface polls/reads the bit SRAM_RF_READY from NS_REG (see Table 14) to know if new data has been written by the I²C interface in the SRAM
- A trigger on the FD pin indicates to the host that data has been read from SRAM by the NFC interface. This feature can be enabled by programming bits 5:2 (FD_OFF, FD_ON) of the NC_REG appropriately (see Table 13)

The above mechanism is illustrated in the Figure 30.

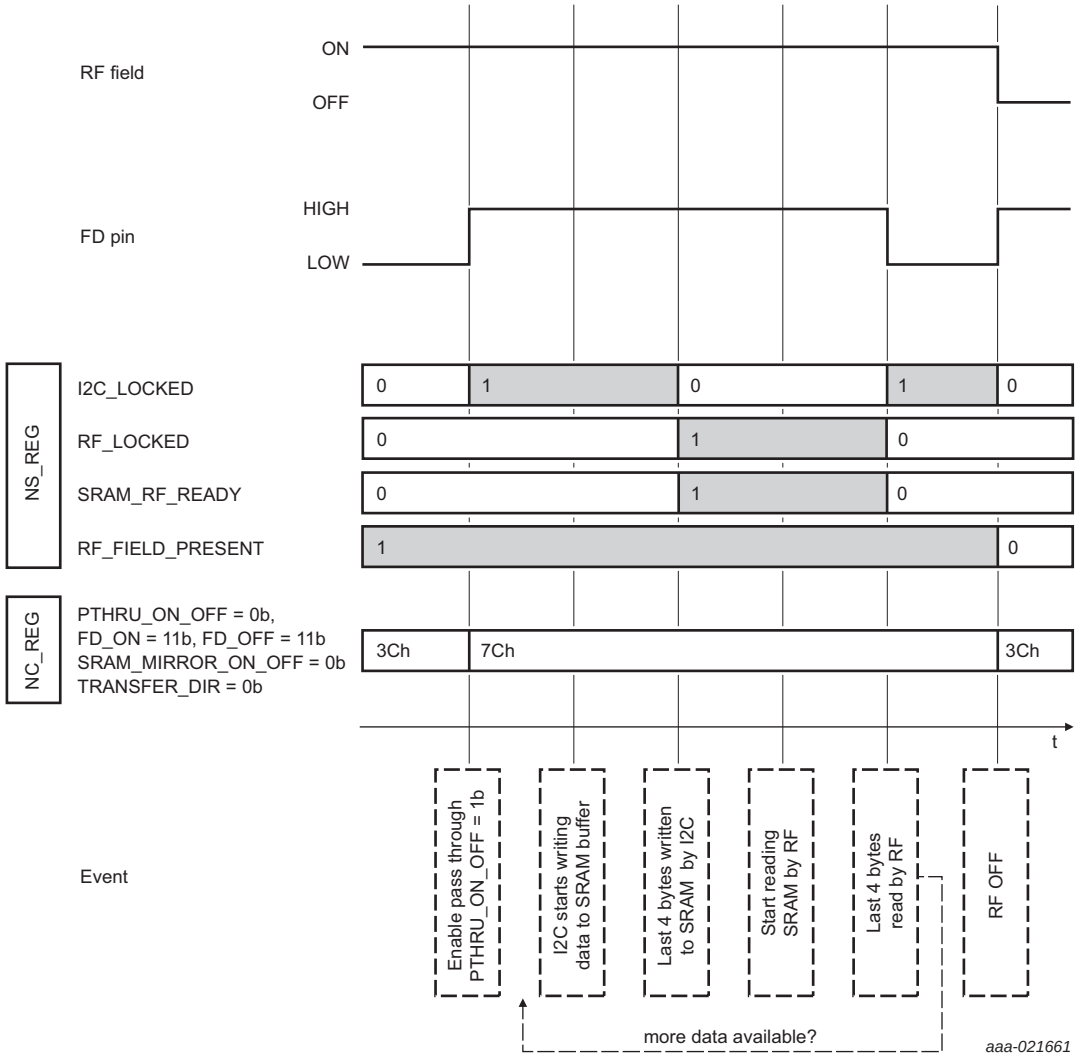

Fig 30. Illustration of the Field detection signal feature in combination with pass-through mode for data transfer from I²C to NFC

All information provided in this document is subject to legal disclaimers.

© NXP Semiconductors N.V. 2016. All rights reserved.

12. Limiting values

Exceeding the limits of one or more values in reference may cause permanent damage to the device. Exposure to limiting values for extended periods may affect device reliability.

Table 41. Limiting values

In accordance with the Absolute Maximum Rating System (IEC 60134).[1][2][3]

Symbol	Parameter	Conditions	Min	Max	Unit
T_{stg}	storage temperature		–55	+125	°C
V_{ESD}	electrostatic discharge voltage (Human Body model)	[3]	-	2	kV
V_{DD}	supply voltage	on pin VCC	-0.5	4.6	V
V_i	input voltage	on pin FD, SDA, SCL	-0.5	4.6	V
I_i	input current	on pin LA, LB	-	40	mA
$V_{i(RF)}$	RF input voltage	on pin LA, LB	-	4.6	V_{peak}

[1] Stresses above one or more of the limiting values may cause permanent damage to the device.

[2] Exposure to limiting values for extended periods may affect device reliability.

[3] ANSI/ESDA/JEDEC JS-001; Human body model: C = 100 pF, R = 1.5 kΩ.

All information provided in this document is subject to legal disclaimers.

© NXP Semiconductors N.V. 2016. All rights reserved.

13. Characteristics

13.1 Electrical characteristics

Table 42. Characteristics

Symbol	Parameter	Conditions	Min	Typ	Max	Unit
C_i	input capacitance	LA - LB, on chip - C_{IC}, f=13.56 MHz, V_{LA-LB}=2.4 V_{RMS}	44	50	56	pF
f_i	input frequency		-	13.56	-	MHz
T_{amb}	ambient temperature		–40	-	+105	°C
Energy harvesting characteristics						
$V_{out,max}$	output voltage	generated at the V_{out} pin, Class 5 antenna, 14 A/m, load current 1 mA	-[1]	-	3.3	V
I²C interface characteristics						
V_{CC}	supply voltage	supplied via V_{CC} only	1.67	-	3.6	V
I_{DD}	supply current	V_{CC}=1.8 V I²C@400KHz	-	-	185	µA
		V_{CC}=2.5 V I²C@400KHz	-	-	210	µA
		V_{CC}=3.3 V I²C@400KHz	-	-	240	µA
I²C pin characteristics						
V_{OL}	LOW-level output voltage	I_{OL}= 3 mA; V_{CC} > 2 V	-	-	0.4	V
		I_{OL}= 2 mA; V_{CC} < 2 V	-	-	0.2*V_{CC}	V
V_{IH}	HIGH-level input voltage		0.7*V_{CC}	-	-	V
V_{IL}	LOW-level input voltage		-	-	0.3*V_{CC}	V
C_i	input capacitance	SCL and SDA pin	-	2.4	-	pF
I_L	leakage current	0 V and $V_{CC,max}$	-	-	10	µA
t_{high}	SCL high time	fast mode 400 kHz	950	-	-	ns
FD pin characteristics						
V_{OL}	LOW-level output voltage	I_{OL}= 4 mA; V_{CC} > 2 V	-	-	0.4	V
		I_{OL}= 3 mA; V_{CC} < 2 V	-	-	0.2*V_{CC}	V
I_L	leakage current		-	-	10	µA
EEPROM characteristics						
t_{ret}	retention time	-40°C to 95°C	20	50	-	year
$N_{endu(W)}$	write endurance	-40°C to 95°C	500000	1000000	-	cycle

[1] Minimum value depends on available field strength and load current conditions. For details refer to Ref. 7

All information provided in this document is subject to legal disclaimers.

© NXP Semiconductors N.V. 2016. All rights reserved.

14. Package outline

XQFN8: plastic, extremely thin quad flat package; no leads; 8 terminals; body 1.6 x 1.6 x 0.5 mm **SOT902-3**

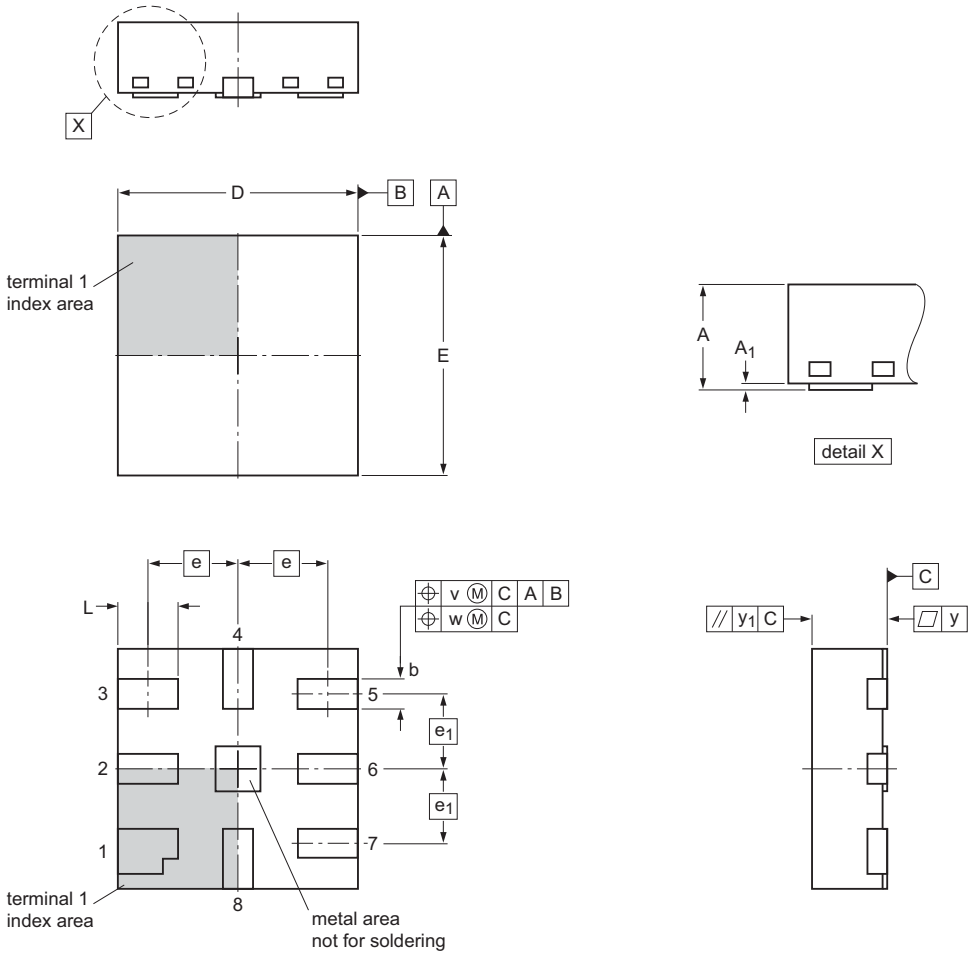

Dimensions

Unit		A	A_1	b	D	E	e	e_1	L	v	w	y	y_1
mm	max	0.5	0.05	0.25	1.65	1.65			0.45				
	nom			0.20	1.60	1.60	0.6	0.5	0.40	0.1	0.05	0.05	0.05
	min		0.00	0.15	1.55	1.55			0.35				

Note
1. Plastic or metal protrusions of 0.075 mm maximum per side are not included.

sot902-3_po

Outline version	References				European projection	Issue date
	IEC	JEDEC	JEITA			
SOT902-3	- - -	MO-255	- - -			~~11-08-16~~ 11-08-18

Fig 31. Package outline SOT902-3 (XQFN8)

All information provided in this document is subject to legal disclaimers.

© NXP Semiconductors N.V. 2016. All rights reserved.

TSSOP8: plastic thin shrink small outline package; 8 leads; body width 3 mm **SOT505-1**

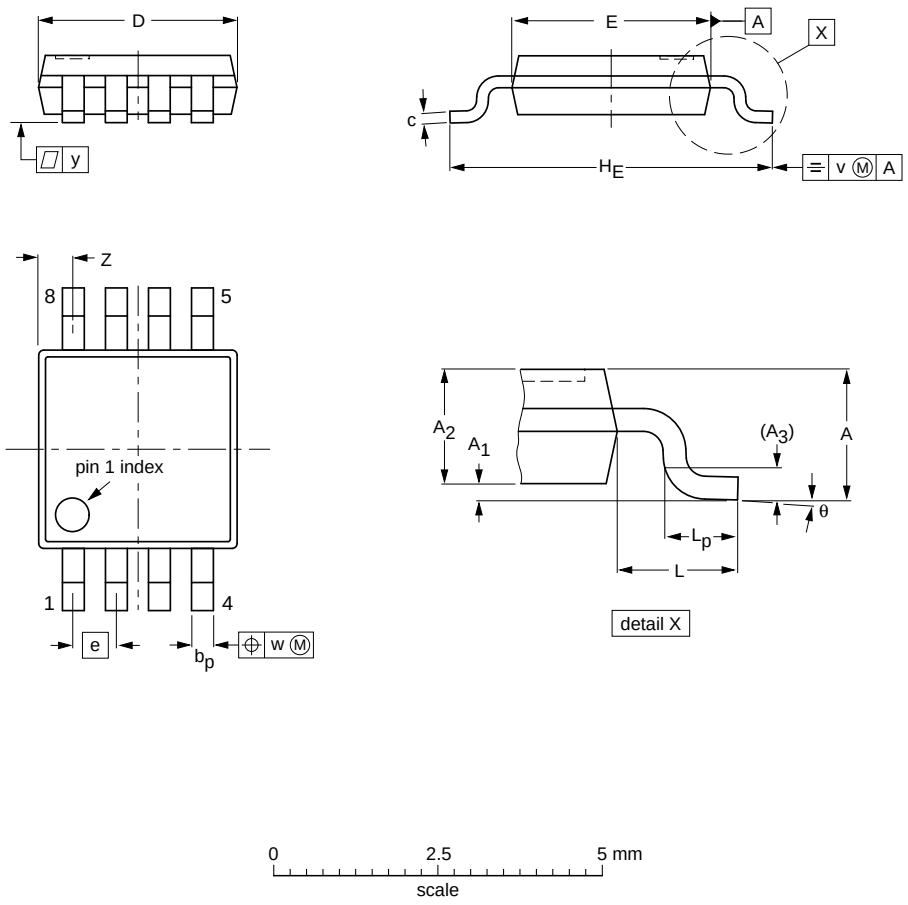

DIMENSIONS (mm are the original dimensions)

UNIT	A max.	A_1	A_2	A_3	b_p	c	D(1)	E(2)	e	H_E	L	L_p	v	w	y	Z(1)	θ
mm	1.1	0.15 0.05	0.95 0.80	0.25	0.45 0.25	0.28 0.15	3.1 2.9	3.1 2.9	0.65	5.1 4.7	0.94	0.7 0.4	0.1	0.1	0.1	0.70 0.35	6° 0°

Notes

1. Plastic or metal protrusions of 0.15 mm maximum per side are not included.
2. Plastic or metal protrusions of 0.25 mm maximum per side are not included.

OUTLINE VERSION	REFERENCES				EUROPEAN PROJECTION	ISSUE DATE
	IEC	JEDEC	JEITA			
SOT505-1						~~99-04-09~~ 03-02-18

Fig 32. Package outline SOT505-1 (TSSOP8)

All information provided in this document is subject to legal disclaimers.

© NXP Semiconductors N.V. 2016. All rights reserved.

SO8: plastic small outline package; 8 leads; body width 3.9 mm **SOT96-1**

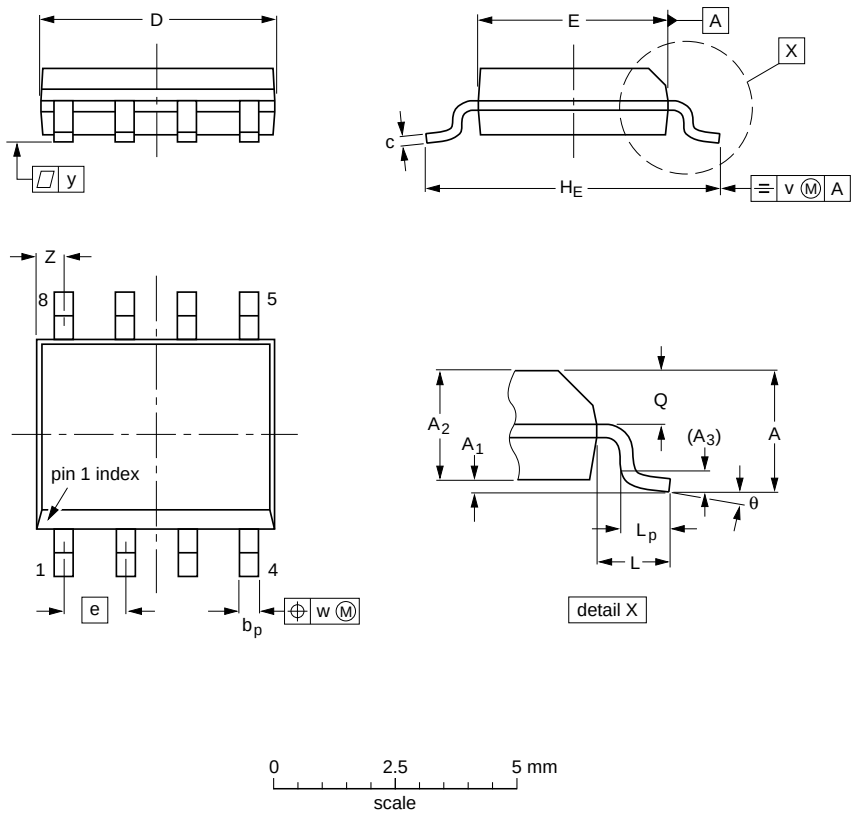

DIMENSIONS (inch dimensions are derived from the original mm dimensions)

UNIT	A max.	A_1	A_2	A_3	b_p	c	D(1)	E(2)	e	H_E	L	L_p	Q	v	w	y	Z(1)	θ
mm	1.75	0.25 0.10	1.45 1.25	0.25	0.49 0.36	0.25 0.19	5.0 4.8	4.0 3.8	1.27	6.2 5.8	1.05	1.0 0.4	0.7 0.6	0.25	0.25	0.1	0.7 0.3	8° 0°
inches	0.069	0.010 0.004	0.057 0.049	0.01	0.019 0.014	0.0100 0.0075	0.20 0.19	0.16 0.15	0.05	0.244 0.228	0.041	0.039 0.016	0.028 0.024	0.01	0.01	0.004	0.028 0.012	

Notes

1. Plastic or metal protrusions of 0.15 mm (0.006 inch) maximum per side are not included.
2. Plastic or metal protrusions of 0.25 mm (0.01 inch) maximum per side are not included.

OUTLINE VERSION	REFERENCES				EUROPEAN PROJECTION	ISSUE DATE
	IEC	JEDEC	JEITA			
SOT96-1	076E03	MS-012				~~99-12-27~~ 03-02-18

Fig 33. Package outline SOT96-1 (SO8)

All information provided in this document is subject to legal disclaimers.

© NXP Semiconductors N.V. 2016. All rights reserved.

15. Abbreviations

Table 43. Abbreviations

Acronym	Description
ASID	Assembly Sequence ID
DBSN	Diffusion Batch Sequence number
POR	Power-On Reset

16. References

[1] NFC Forum - Type 2 Tag Operation V1.2
Technical Specification

[2] ISO/IEC 14443 - Identification cards - Contactless integrated circuit cards - Proximity cards
International Standard

[3] I²C-bus specification and user manual
NXP standard UM10204
http://www.nxp.com/documents/user_manual/UM10204.pdf

[4] NFC Forum - Activity V1.1
Technical Specification

[5] AN11276 NTAG Antenna Design Guide
NXP Application Note
http://www.nxp.com/documents/application_note/AN11276.pdf

[6] AN11350 NTAG21x Originality Signature Validation
NXP Application Note
http://www.nxp.com/restricted_documents/53420/AN11350.pdf

[7] AN11578 NTAG I²C Energy Harvesting
NXP Application Note
http://www.nxp.com/documents/application_note/AN11578.pdf

[8] AN11579 How to use the NTAG I²C (*plus*) for bidirectional communication
NXP Application Note
http://www.nxp.com/documents/application_note/AN11579.pdf

[9] AN11786 NTAG I²C *plus* Memory Configuration Options
NXP Application Note
http://www.nxp.com/documents/application_note/AN11786.pdf

[10] Certicom Research
SEC 2: Recommended Elliptic Curve Domain Parameters V2.0

All information provided in this document is subject to legal disclaimers.

© NXP Semiconductors N.V. 2016. All rights reserved.

17. Revision history

Table 44. Revision history

Document ID	Release date	Data sheet status	Change notice	Supersedes
NT3H2111_2211 v. 3.0	20160203	Product data sheet	-	-

All information provided in this document is subject to legal disclaimers.

© NXP Semiconductors N.V. 2016. All rights reserved.

18. Legal information

18.1 Data sheet status

Document status[1][2]	Product status[3]	Definition
Objective [short] data sheet	Development	This document contains data from the objective specification for product development.
Preliminary [short] data sheet	Qualification	This document contains data from the preliminary specification.
Product [short] data sheet	Production	This document contains the product specification.

[1] Please consult the most recently issued document before initiating or completing a design.

[2] The term 'short data sheet' is explained in section "Definitions".

[3] The product status of device(s) described in this document may have changed since this document was published and may differ in case of multiple devices. The latest product status information is available on the Internet at URL http://www.nxp.com.

18.2 Definitions

Draft — The document is a draft version only. The content is still under internal review and subject to formal approval, which may result in modifications or additions. NXP Semiconductors does not give any representations or warranties as to the accuracy or completeness of information included herein and shall have no liability for the consequences of use of such information.

Short data sheet — A short data sheet is an extract from a full data sheet with the same product type number(s) and title. A short data sheet is intended for quick reference only and should not be relied upon to contain detailed and full information. For detailed and full information see the relevant full data sheet, which is available on request via the local NXP Semiconductors sales office. In case of any inconsistency or conflict with the short data sheet, the full data sheet shall prevail.

Product specification — The information and data provided in a Product data sheet shall define the specification of the product as agreed between NXP Semiconductors and its customer, unless NXP Semiconductors and customer have explicitly agreed otherwise in writing. In no event however, shall an agreement be valid in which the NXP Semiconductors product is deemed to offer functions and qualities beyond those described in the Product data sheet.

18.3 Disclaimers

Limited warranty and liability — Information in this document is believed to be accurate and reliable. However, NXP Semiconductors does not give any representations or warranties, expressed or implied, as to the accuracy or completeness of such information and shall have no liability for the consequences of use of such information. NXP Semiconductors takes no responsibility for the content in this document if provided by an information source outside of NXP Semiconductors.

In no event shall NXP Semiconductors be liable for any indirect, incidental, punitive, special or consequential damages (including - without limitation - lost profits, lost savings, business interruption, costs related to the removal or replacement of any products or rework charges) whether or not such damages are based on tort (including negligence), warranty, breach of contract or any other legal theory.

Notwithstanding any damages that customer might incur for any reason whatsoever, NXP Semiconductors' aggregate and cumulative liability towards customer for the products described herein shall be limited in accordance with the *Terms and conditions of commercial sale* of NXP Semiconductors.

Right to make changes — NXP Semiconductors reserves the right to make changes to information published in this document, including without limitation specifications and product descriptions, at any time and without notice. This document supersedes and replaces all information supplied prior to the publication hereof.

Suitability for use — NXP Semiconductors products are not designed, authorized or warranted to be suitable for use in life support, life-critical or safety-critical systems or equipment, nor in applications where failure or malfunction of an NXP Semiconductors product can reasonably be expected to result in personal injury, death or severe property or environmental damage. NXP Semiconductors and its suppliers accept no liability for inclusion and/or use of NXP Semiconductors products in such equipment or applications and therefore such inclusion and/or use is at the customer's own risk.

Applications — Applications that are described herein for any of these products are for illustrative purposes only. NXP Semiconductors makes no representation or warranty that such applications will be suitable for the specified use without further testing or modification.

Customers are responsible for the design and operation of their applications and products using NXP Semiconductors products, and NXP Semiconductors accepts no liability for any assistance with applications or customer product design. It is customer's sole responsibility to determine whether the NXP Semiconductors product is suitable and fit for the customer's applications and products planned, as well as for the planned application and use of customer's third party customer(s). Customers should provide appropriate design and operating safeguards to minimize the risks associated with their applications and products.

NXP Semiconductors does not accept any liability related to any default, damage, costs or problem which is based on any weakness or default in the customer's applications or products, or the application or use by customer's third party customer(s). Customer is responsible for doing all necessary testing for the customer's applications and products using NXP Semiconductors products in order to avoid a default of the applications and the products or of the application or use by customer's third party customer(s). NXP does not accept any liability in this respect.

Limiting values — Stress above one or more limiting values (as defined in the Absolute Maximum Ratings System of IEC 60134) will cause permanent damage to the device. Limiting values are stress ratings only and (proper) operation of the device at these or any other conditions above those given in the Recommended operating conditions section (if present) or the Characteristics sections of this document is not warranted. Constant or repeated exposure to limiting values will permanently and irreversibly affect the quality and reliability of the device.

Terms and conditions of commercial sale — NXP Semiconductors products are sold subject to the general terms and conditions of commercial sale, as published at http://www.nxp.com/profile/terms, unless otherwise agreed in a valid written individual agreement. In case an individual agreement is concluded only the terms and conditions of the respective agreement shall apply. NXP Semiconductors hereby expressly objects to applying the customer's general terms and conditions with regard to the purchase of NXP Semiconductors products by customer.

No offer to sell or license — Nothing in this document may be interpreted or construed as an offer to sell products that is open for acceptance or the grant, conveyance or implication of any license under any copyrights, patents or other industrial or intellectual property rights.

All information provided in this document is subject to legal disclaimers.

© NXP Semiconductors N.V. 2016. All rights reserved.

Export control — This document as well as the item(s) described herein may be subject to export control regulations. Export might require a prior authorization from competent authorities.

Quick reference data — The Quick reference data is an extract of the product data given in the Limiting values and Characteristics sections of this document, and as such is not complete, exhaustive or legally binding.

Non-automotive qualified products — Unless this data sheet expressly states that this specific NXP Semiconductors product is automotive qualified, the product is not suitable for automotive use. It is neither qualified nor tested in accordance with automotive testing or application requirements. NXP Semiconductors accepts no liability for inclusion and/or use of non-automotive qualified products in automotive equipment or applications.

In the event that customer uses the product for design-in and use in automotive applications to automotive specifications and standards, customer (a) shall use the product without NXP Semiconductors' warranty of the product for such automotive applications, use and specifications, and (b) whenever customer uses the product for automotive applications beyond NXP Semiconductors' specifications such use shall be solely at customer's own risk, and (c) customer fully indemnifies NXP Semiconductors for any liability, damages or failed product claims resulting from customer design and use of the product for automotive applications beyond NXP Semiconductors' standard warranty and NXP Semiconductors' product specifications.

Translations — A non-English (translated) version of a document is for reference only. The English version shall prevail in case of any discrepancy between the translated and English versions.

18.4 Licenses

Purchase of NXP ICs with NFC technology
Purchase of an NXP Semiconductors IC that complies with one of the Near Field Communication (NFC) standards ISO/IEC 18092 and ISO/IEC 21481 does not convey an implied license under any patent right infringed by implementation of any of those standards. Purchase of NXP Semiconductors IC does not include a license to any NXP patent (or other IP right) covering combinations of those products with other products, whether hardware or software.

18.5 Trademarks

Notice: All referenced brands, product names, service names and trademarks are the property of their respective owners.

MIFARE — is a trademark of NXP B.V.

I²C-bus — logo is a trademark of NXP B.V.

19. Contact information

For more information, please visit: **http://www.nxp.com**

For sales office addresses, please send an email to: **salesaddresses@nxp.com**

All information provided in this document is subject to legal disclaimers.

© NXP Semiconductors N.V. 2016. All rights reserved.

20. Contents

1 General description . . . 1
2 Features and benefits . . . 2
2.1 Key features . . . 2
2.2 NFC interface . . . 2
2.3 Memory . . . 3
2.4 I²C interface . . . 3
2.5 Security . . . 3
2.6 Key benefits . . . 3
3 Applications . . . 4
4 Ordering information . . . 5
5 Marking . . . 5
6 Block diagram . . . 6
7 Pinning information . . . 6
7.1 Pinning . . . 6
7.1.1 XQFN8 . . . 6
7.1.2 TSSOP8 . . . 7
7.1.3 SO8 . . . 7
7.2 Pin description . . . 7
8 Functional description . . . 8
8.1 Block description . . . 8
8.2 NFC interface . . . 8
8.2.1 Data integrity . . . 8
8.2.2 NFC state machine . . . 9
8.2.2.1 IDLE state . . . 9
8.2.2.2 READY 1 state . . . 10
8.2.2.3 READY 2 state . . . 10
8.2.2.4 ACTIVE state . . . 10
8.2.2.5 AUTHENTICATED state . . . 10
8.2.2.6 HALT state . . . 10
8.3 Memory organization . . . 11
8.3.1 Memory map from NFC perspective . . . 12
8.3.2 Memory map from I²C interface . . . 14
8.3.3 EEPROM . . . 17
8.3.4 SRAM . . . 17
8.3.5 Serial number (UID) . . . 17
8.3.6 Static Lock Bytes . . . 18
8.3.7 Dynamic Lock Bytes . . . 19
8.3.8 Capability Container (CC) . . . 21
8.3.9 User Memory pages . . . 21
8.3.10 Memory content at delivery . . . 22
8.3.11 Password and Access Configuration . . . 23
8.3.12 NTAG I²C configuration and session registers 25
8.4 Configurable Event Detection Pin . . . 30
8.5 Watchdog timer . . . 34
8.6 Energy harvesting . . . 34
8.7 Password authentication . . . 36
8.7.1 Programming of PWD and PACK . . . 36
8.7.2 Limiting negative verification attempts . . . 37
8.7.3 Protection of configuration segments . . . 37
8.8 Originality signature . . . 37
9 I²C commands . . . 38
9.1 Start condition . . . 38
9.2 Stop condition . . . 38
9.3 I²C soft reset and NFC silence feature . . . 39
9.4 Acknowledge bit (ACK) . . . 39
9.5 Data input . . . 39
9.6 Addressing . . . 39
9.7 READ and WRITE Operation . . . 41
9.8 WRITE and READ register operation . . . 43
10 NFC Command . . . 45
10.1 NTAG I²C *plus* command overview . . . 45
10.2 Timing . . . 45
10.3 NTAG ACK and NAK . . . 46
10.4 ATQA and SAK responses . . . 46
10.5 GET_VERSION . . . 47
10.6 READ_SIG . . . 48
10.7 PWD_AUTH . . . 50
10.8 READ . . . 51
10.9 FAST_READ . . . 52
10.10 WRITE . . . 53
10.11 FAST_WRITE . . . 54
10.12 SECTOR SELECT . . . 55
11 Communication and arbitration between NFC and I²C interface . . . 57
11.1 Pass-through mode not activated . . . 57
11.1.1 I²C interface access . . . 57
11.1.2 NFC interface access . . . 57
11.2 SRAM buffer mapping with Memory Mirror enabled . . . 58
11.3 Pass-through mode . . . 61
11.3.1 SRAM buffer mapping . . . 61
11.3.2 NFC to I²C Data transfer . . . 64
11.3.3 I²C to NFC Data transfer . . . 65
12 Limiting values . . . 67
13 Characteristics . . . 68
13.1 Electrical characteristics . . . 68
14 Package outline . . . 69
15 Abbreviations . . . 72
16 References . . . 72
17 Revision history . . . 73
18 Legal information . . . 74
18.1 Data sheet status . . . 74

continued >>

All information provided in this document is subject to legal disclaimers.

© NXP Semiconductors N.V. 2016. All rights reserved.

18.2 Definitions 74
18.3 Disclaimers 74
18.4 Licenses 75
18.5 Trademarks 75
19 Contact information 75
20 Contents 76

Please be aware that important notices concerning this document and the product(s) described herein, have been included in section 'Legal information'.

© NXP Semiconductors N.V. 2016. All rights reserved.

For more information, please visit: http://www.nxp.com
For sales office addresses, please send an email to: salesaddresses@nxp.com

Date of release: 3 February 2016
359930