C3225X7R2E104M200AA

TDK Item Description : C3225X7R2E104MT****

Lead Free | Halogen Free | REACH | RoHS COMPLIANT

Application & Main Feature

Commercial Grade (Mid Voltage (100 to 630V))

Series

C3225 [EIA CC1210]

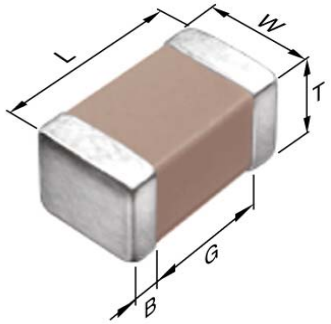

Dimensions

L	3.20mm +/-0.4mm
W	2.50mm +/-0.3mm
T	2.00mm +/-0.2mm
B	0.20mm Min.
G	

Temperature Characteristic

X7R (-55 to 125 degC +/-15%)

Rated Voltage

2E (250Vdc)

Capacitance

100nF

Capacitance Tolerance

M (+/-20%)

Dissipation Factor

3% Max.

Insulation Resitance

5Gohm Min.

AEC-Q200

Not Applicable

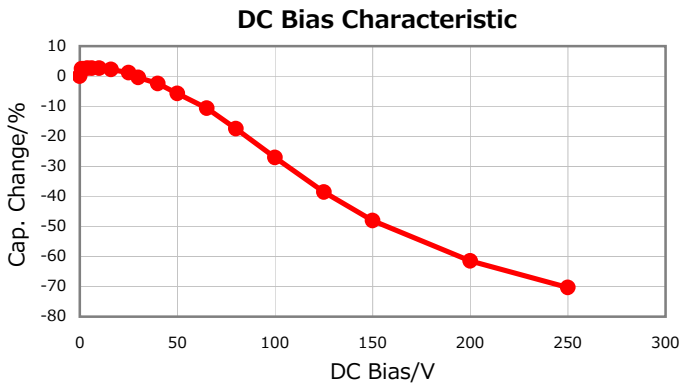

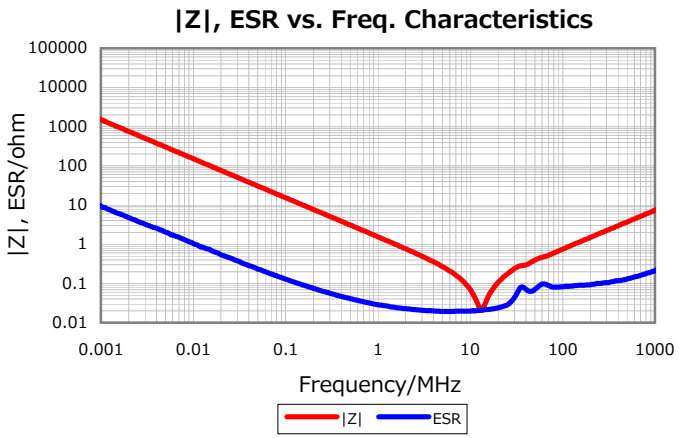

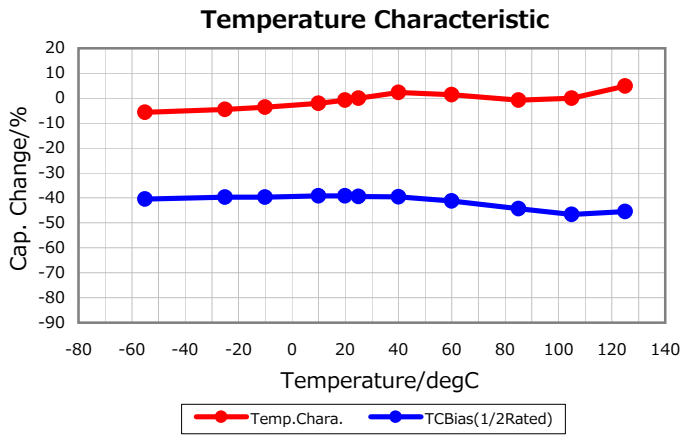

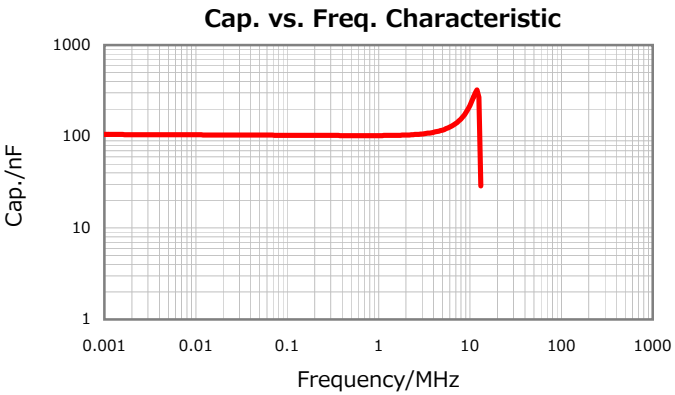

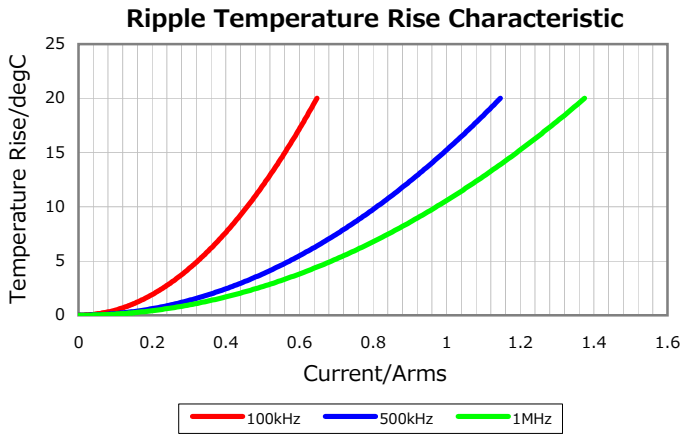

Characterization Sheet (Multilayer Ceramic Chip Capacitors)

TDK

All specifications are subject to change without notice.

September 28, 2013

Mouser Electronics

Authorized Distributor

Click to View Pricing, Inventory, Delivery & Lifecycle Information:

TDK:
C3225X7R2E104M200AA