RFPC-SMA16-FN	CUSTOMER PRODUCT SPECIFICATION SHEET	RoHS Compliant

RFPC-SMA16-FN: SMA Straight Bulkhead Jack With O-ring, PCB Connector, Rated to IP67/68, 6GHz

Material and Plating:

Insulator A: Teflon
Insulator B: Teflon
Body: Brass, Gold Plated
Pin: Phosphor Bronze, Gold Plated
Gasket: Silicon, Color: Red
O-Ring: Silicone, Color: Red

Washer: Brass, Gold Plated

Nut: Brass, Gold Plated

Environmental:
A. Tested to:
  i. IP6x - Dust tight - no particle ingress.
  ii. IPx7 Waterproof for 30 minutes up to 1 meter underwater.
  iii. IPx8 Waterproof for 48 hours at 1 meter underwater.

Notes:
1. Packaging Type: Tray.
2. Working Frequency Range: DC-6GHz.
3. Operating Temperature: -65°C~+165°C.
4. The waterproof sealing function will work once the sealing o-ring is completely pressed and fitted to the device's panel.
5. Impedance: 50 ohm.

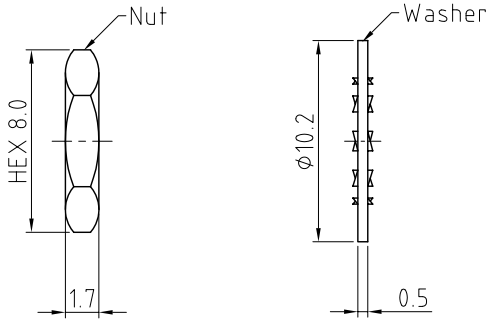

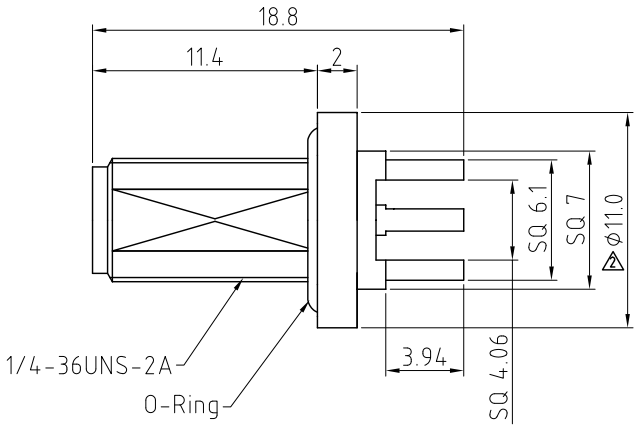

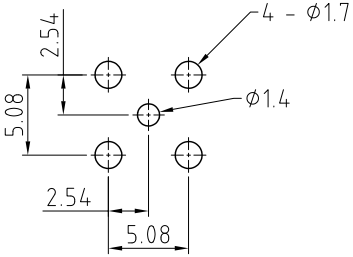

Recommended PCB Hole Layout

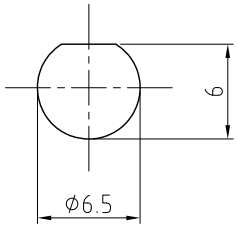

Recommended Mounting Hole

Applicable Panel Thickness:
Min. 0.7mm ~ Max. 3.2mm

HOW TO ORDER

RFPC - SMA16 - FN - X

WASHER AND NUT OPTIONS:
BLANK = SEPARATELY PACKED (STANDARD)
A = ALL ASSEMBLED WITH CONNECTOR

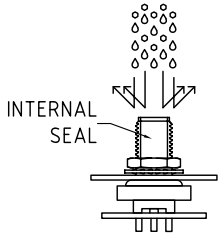

IP RATED EVEN WHEN UNMATED

REV.	DATE & DRN	
1.0	30/07/'18 - NYW	RELEASE
1.1	30/08/'18 - NYW	AMEND DIMENSION. AMEND PIN MATERIAL.
1.2	27/12/'18 - NYW	AMEND DIMENSION.
1.3	18/02/'19 - NYW	ADD WASHER & NUT OPTIONS.
1.4	27/05/'19 - NYW	ADD OPERATING TEMP.
1.5	25/02/'22 - NYW	ADD 'SQ' TO DIMENSIONS. ADD NOTE 4.
1.6	14/02/'23 - NYW	ADD IMPEDANCE.
1.7	20/03/'24 - NYW	ADD PANEL THICKNESS.
1.8	31/03/'24 - CC	ADD IP RATING VIEW
1.9	24/10/'24 - CC	Change frequency as 6GHz. Change operating temp as -65°C~+165°C. Add GCT logo.

Scale: NTS	THIRD ANGLE	Unstated Tolerances: .X ±0.2, .XX ±0.2, .XXX ±0.2, ANGLES N/A	Drawing Number: RFPC-SMA16-FN
Drawn: CC			
App'd: XXX	Title SMA PCB Connector		Sheet 1 of 1
Date: 24 OCT. '24	Revision: 1.9	Unit: mm	Drawing © E and O E

NAUTILUS — IP Rated RF Products
GCT GradConn — www.gct.co www.gradconn.com

© THIS DRAWING IS CONFIDENTIAL AND MUST NOT BE COPIED OR DISCLOSED WITHOUT WRITTEN CONSENT

Mouser Electronics

Authorized Distributor

Click to View Pricing, Inventory, Delivery & Lifecycle Information:

GCT:

RFPC-SMA16-FN-A RFPC-SMA16-FN