Connectors for Aerospace, Defense and Marine

TE connectivity

Markets Served

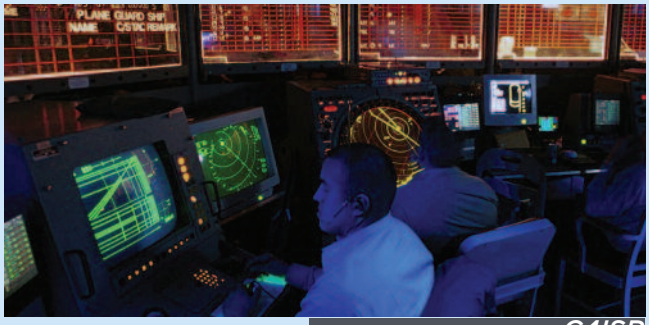

C4ISR

Commercial Aerospace

Ground Defense

Military Aerospace

Military Marine

Missile Defense

Offshore / Civil Marine

Space

www.te.com/ADM

Introduction

For 50+ years, we have been helping the aerospace, defense and marine industry reach new levels of performance with specific product solutions. Built on the foundation of AMP Incorporated, which originated in 1941 as Aircraft Marine Products, TE Connectivity is now the home of an unmatched array of quality components for the MIL-Aero market.

TE has grown to become the world's largest manufacturer of passive electronic components, as well as a world leader in fiber optic active components. We are also one of the largest RF component and subsystem manufacturers in the industry.

In addition to our broad offering of interconnection solutions for copper and fiber, cable and harness assemblies,our portfolio also includes printed circuits, touch screens, relays, high-reliability lasers, aircraft sensors, plus nano- and micro-lens connectors for free space optical interconnect applications. In short, we have the products to meet your MIL-Spec, QPL, space-qualified and COTS requirements.

We're committed to working with you to design the next generation of aerospace and defense products — and delivering cost-effective performance and innovative solutions through capabilities such as:

- Design and development engineering and analysis
- Reliability, quality assurance, testing and agency approvals
- Materials engineering expertise in metals, polymers and plating
- Technology leadership in electromagnetic and shielding analysis and high-speed circuit design
- Program management

Catalog 1308940
Revised 9-14

www.te.com

Dimensions are shown for reference purposes only. Specifications subject to change.

Dimensions are in millimeters unless otherwise specified.

USA: +1 800 522 6752
Asia Pacific: +86 0 400 820 6015
UK: +44 800 267 666

For additional support numbers please visit www.te.com

Table of Contents

Printed Circuit Board Connectors
High Speed Board Level Connectors . . . . . 1-3 to 1-10
AMP MIL-Spec PCB Connectors 1-11
Mini-Box .050 [1.27] Centerline Connectors . . . . . 1-12 to 1-29
AMP-HDI .075 [1.91] Staggered Centerline LRM Connectors . . . . . 1-30 to 1-37
Box .075 [1.91] Centerline Connectors . . . . . 1-38 to 1-44
Box .100 [2.54] Centerline Connectors . . . . . 1-45 to 1-78
Box II Connectors . . . . . 1-79 to 1-90
AMPMODU .100 [2.54] Centerline Connectors per MIL-C-55302 . . . . . 1-91 to 1-98
AMP-BLADE Two-Piece Printed Circuit Edge Connectors . . . . . 1-99 to 1-106

RF Connectors
Military Qualified . . . . . 2-4 to 2-34
Push-On Coaxial Connectors . . . . . 2-35 to 2-61
Threaded Connectors . . . . . 2-62 to 2-75
Coaxial Cable Termination . . . . . 76 to 2-81
Application Tooling . . . . . 2-82 to 2-87
Cross Reference . . . . . 2-88 to 2-92
Cheminax Coaxial Cables Cross Reference 2-92
Nanonics Coaxial Connectors . . . . . 2-93 to 2-101
MICRODOT Coaxial Connectors . . . . . 2-102 to 2-147
Appendix . . . . . 2-148 to 2-158

Ruggedized Fiber Optic Connectors
Introduction . . . . . 3-2 to 3-3
Expanded Beam Products . . . . . 3-4 to 3-28
Physical Contact & Technology . . . . . 3-29 to 3-34
Rugged Circular Connectors . . . . . 3-35 to 3-54
Rugged Board Level Connectors 3-55
Navy CID Approved - Epoxy Applied 3-56, 3-57
LightCrimp Plus Navy Approved . . . . . 3-58 to 3-60
Offshore Optical Connectors and Cable Assemblies 3-61

Rack and Panel Connectors
ARINC 600 Connectors . . . . . 4-2 to 4-44
ARINC 404 Connectors . . . . . 4-45 to 4-70
HexaShield High-Performance EMC/EMI Adapters . . . . . 4-71 to 4-76

Nanominiature and Microminiature Connectors
Nanominiature Connectors . . . . . 5-4 to 5-5
DUALOBE Rectangular Connectors . . . . . 5-6 to 5-43
Strip Connectors . . . . . 5-44 to 5-50
Microminiature Connectors 5-51
Microminiature D Connectors . . . . . 5-52 to 5-82
Rectangular Connectors . . . . . 5-83 to 5-100

High Speed I/O's
CeeLok FAS-T Connectors, Cable Assemblies, and Associated Products . . . . . 6-2 to 6-8
CeeLok FAS-T Nano Circular Connectors . . . . . 6-9 to 6-12
Quadrax Contacts, Connectors and Cables . . . . . 6-13 to 6-36

Catalog 1308940
Revised 9-14

www.te.com

Dimensions are shown for reference purposes only. Specifications subject to change.

Dimensions are in millimeters unless otherwise specified.

USA: +1 800 522 6752
Asia Pacific: +86 0 400 820 6015
UK: +44 800 267 666

For additional support numbers please visit www.te.com

Table of Contents (Continued)

Circular Connectors

Circular HD Connectors . . . . . .7-2 to 7-18

NANONICS Environmentally Sealed Circular Connectors . . . . . .7-19 to 7-40

Rectangular Pin and Socket Connectors

General Purpose Rectangular (GPR) Connectors . . . . . .8-3 to 8-34

AMPLIMITE Subminiature Connectors . . . . . .8-35 to 8-103

High Density Rectangular Connectors . . . . . .8-104 to 8-116

MTC High-Performance Modular Rectangular Connectors with Removable Contacts . . . . . .8-117 to 8-140

"G" Series Modular Connectors . . . . . .8-141 to 8-158

Terminal Junction System (MIL-T-81714 and Commercial) . . . . . .8-159 to 8-179

LGH High Voltage Connectors

Introduction . . . . . .9-2 to 9-4

LGH Lead Assemblies and Receptacles . . . . . .9-4 to 9-26

Commercial Single Line Connectors . . . . . .9-27 to 9-30

Two-Position Connectors, 10 KVDC . . . . . .9-31 to 9-33

Multi-Pin Circular Commercial Connectors, 27 KVDC 9-34, 9-35

Multi-Line High Voltage Connectors 9-36

5-Pin, Metal-Shell Circular Connectors, Military-Type 9-37, 9-38

7-Pin, Metal-Shell Circular Connectors, Military-Type 9-39, 9-40

6-Pin, Subminiature Rectangular Connectors . . . . . .9-41 to 9-45

LGH Micro-Miniature Connectors and Cable Assemblies . . . . . .9-46 to 9-48

Medical Receptacles (Used Primarily for Patient Monitoring) 9-49, 9-50

Various Specials . . . . . .9-51 to 9-62

Accessories 9-63

LGH Product Worksheet for Ordering Custom Designs 9-64

Terminals and Splices

How to Compute Circular Mil Area of Various Wire Shapes 10-2

Terminal Stud Hole Size 10-3

AMP Crimp Style

SOLISTRAND Uninsulated Terminals and Splices . . . . . .10-4 to 10-7

STRATO-THERM Terminals and Splices for High Temperature Applications . .10-8 to 10-22

COPALUM Sealed Terminals and Splices . . . . . .10-23 to 10-28

PIDG (Pre-Insulated DIAMOND GRIP) Terminals and Splices . . . . . .10-29 to 10-37

Radiation Resistant/302°F [150°C] Pre-Insulated Terminals and Splices . .10-38 to 10-40

TERMINYL Insulated Terminals . . . . . .10-41 to 10-42

Data Bus (MIL-STD-1553B) Components

Discrete Connectors 11-2, 11-3

Accessories . . . . . .11-4 to 11-8

Triaxial Size 8 Contacts 11-9

Supporting Information

Equivalents and Conversions 12-2, 12-3

Temperature Conversion Formula 12-4, 12-5

Glossary of Terms . . . . . .13-1 to 13-10

Part Number Index . . . . . .14-1 to 14-17

Engineering Notes

Catalog 1308940
Revised 9-14

www.te.com

Dimensions are shown for reference purposes only. Specifications subject to change.

Dimensions are in millimeters unless otherwise specified.

USA: +1 800 522 6752
Asia Pacific: +86 0 400 820 6015
UK: +44 800 267 666

For additional support numbers please visit www.te.com

Table of Contents

High Speed Board Level Connectors
MULTIGIG RT 2-R Ruggedized Connectors for VPX Applications . . . . . .1-3 to 1-6
Fortis Zd Connector 1-7, 1-8
Mezalok Connector (High Reliability Mezzanine Connector) 1-9, 1-10
AMP MIL-Spec PCB Connectors
Introduction 1-11
Mini-Box .050 [1.27] Centerline Connectors
Introduction 1-12
Mini-Box and Extended Mini-Box Assemblies . . . . . .1-13 to 1-23
Microminiature COAXICON Contacts for Hybrid Cavities 1-24
Recommended Printed Circuit Board Layouts 1-25 to1-27
Keying Hardware 1-27
4-Row Mini-Box Connectors 1-28, 1-29
AMP-HDI .075 [1.91] Staggered Centerline LRM Connectors
Introduction 1-30
AMP-HDI 6-Row and 8-Row Connectors . . . . . .1-31 to 1-35
AMP-HDI Accessories and Shell Accessories 1-36, 1-37
Box .075 [1.91] Centerline Connectors
Introduction 1-38
Assemblies, Receptacle and Pin Header . . . . . 1-39 to 1-42
Stacking Connectors 1-43
Recommended Printed Circuit Board Layouts 1-44
Box .100 [2.54] Centerline Connectors
Introduction 1-45
Assemblies, Receptacle and Pin Header . . . . . .1-46 to 1-55
Pin Housing and Assemblies for Crimp Contacts 1-56, 1-57
Receptacle Housing and Assemblies for Crimp Contacts . . . . . .1-58 to 1-60
Assemblies, 3-Row and 4-Row . . . . . .1-61 to 1-65
Assemblies with Hybrid Cavities . . . . . .1-66 to 1-69
Microminiature COAXICON Contacts for Hybrid Cavities 1-70
Recommended Printed Circuit Board Layouts . . . . . .1-71 to 1-76
Keying Hardware and Replacement Contacts for
.075 [1.91] and .100 [.254] Centerlines 1-77, 1-78
Box II Connectors
Vertical Receptacles with ACTION PIN Posts and Solder Post Contacts 1-79
Horizontal Motherboard Stacking (Not Recommended for MFBL Applications) 1-80
Assemblies, 4-Row, 3-Row, and 2-Row . . . . . .1-81 to 1-84
Recommended Printed Circuit Board Hole Layouts 1-85, 1-86
ACTION PIN Press-Fit Contacts 1-87
Application Tooling 1-88
Hardware and Applications 1-89, 1-90
AMPMODU .100 [2.54] Centerline Connectors per MIL-C-55302
Introduction 1-91
Receptacle Assemblies, Single Row and Double Row . . . . . .1-92 to 1-97
Special Double Row Receptacles 1-98

Catalog 1308940
Revised 9-14

www.te.com

Dimensions are shown for reference purposes only. Specifications subject to change.

Dimensions are in millimeters unless otherwise specified.

USA: +1 800 522 6752
Asia Pacific: +86 0 400 820 6015
UK: +44 800 267 666

For additional support numbers please visit www.te.com

Table of Contents (Continued)

AMP-BLADE Two-Piece Printed Circuit Edge Connectors

Introduction 1-99
AMP-BLADE Connector for Snap-In Receptacle Contacts 1-100
Board Half Housing Pre-loaded with Blade Type Contacts 1-101, 1-102
Wire-Half Assemblies and Housings 1-103
Receptacle Housings for Crimp Snap-In Contacts 1-104
AMP-BLADE Connector Keying 1-105
Application Tooling 1-106

MULTIGIG RT 2-R Ruggedized Connectors for VPX Applications

Product Facts

- **Quad-redundant contact system supports high levels of shock/vibration**
- **Compliant to VITA 46 for Open VPX applications**
- **Supports Ethernet, Fibre Channel, InfiniBand applications, PCIe and Serial RapidIO high speed protocols**
- **Modular, lightweight connector system**
- **Robust "pinless" interface**
- **Differential, single-ended and power**
- **Ruggedized guide hardware available**
- **Supports 0.8 inch card slot pitches**
- **VITA 46 compliance enables upgrade in existing VPX applications**
- **Can be combined with high power modules (VITA 62), RF modules (VITA 67) and Optical modules (VITA 66)**

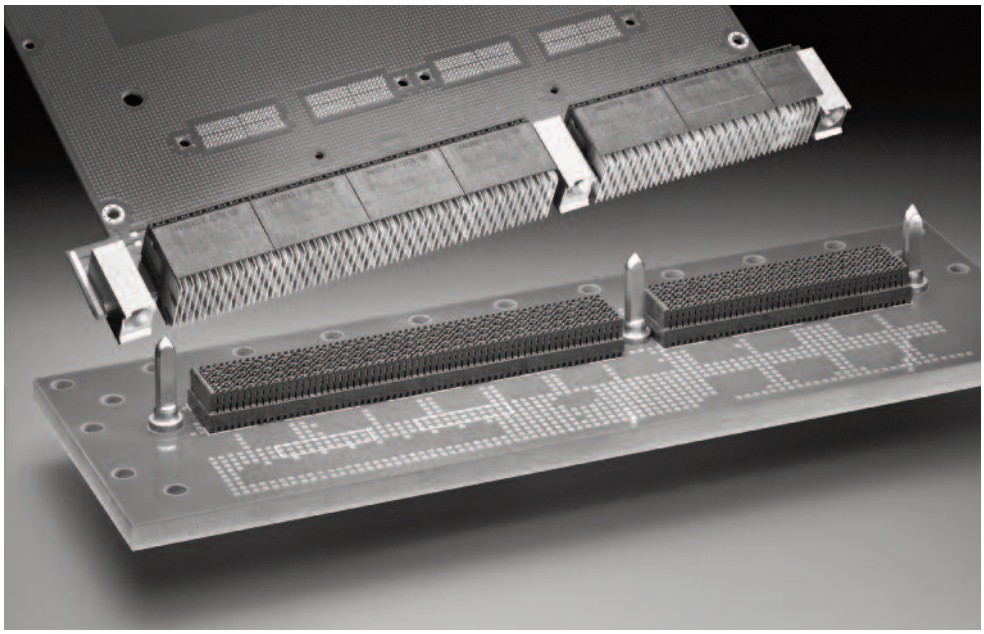

Description

TE's MULTIGIG RT 2-R ruggedized, light weight, high speed board-to-board-interconnect is compliant to VITA 46 standard. This connector system features a quad-redundant contact structure designed for high vibration levels.

Applications

Rugged embedded computing applications:

- Ground Defense
- Missile Defense
- Electronic Systems / C4ISR
- Space
- Commercial and Military Aerospace

Materials

Contacts: High performance copper alloy, plated 50 µin Au over 50 µin Ni in mating area, tin-lead on compliant pin tails

Housings: High temperature thermoplastic

Rugged Guide Hardware: Aluminum and passivated stainless steel

Mechanical

Operating Temperature: -55 to +105˚C

Mating Force: 0.75 N [2.70 ozf] maximum per contact

Standards & Specifications

Compliant to VITA 46 (VPX)

Product Specification: 108-2072

Application Specification: 114-13056

Qualification Test Report: 501-544

Physical or other Properties

Tested to HALT (Highly accelerated life test) vibration levels (0.2G2/Hz) per VITA 72

Connector modules available for 3U and 6U VPX slot profiles, including rear transition modules

Reliable press-fit termination, requiring only flat rock tooling

Lightest weight VPX connector system: mated set of connectors and guide hardware for typical module and backplane slots: 3U - 62.66g (2.21 oz); 6U - 140.26g (4.95 oz)

Catalog 1308940
Revised 9-14

www.te.com

Dimensions are shown for reference purposes only. Specifications subject to change.

Dimensions are in millimeters unless otherwise specified.

USA: +1 800 522 6752
Asia Pacific: +86 0 400 820 6015
UK: +44 800 267 666

For additional support numbers please visit www.te.com

MULTIGIG RT 2-R Ruggedized Connectors for VPX Applications (Continued)

Part Configurations

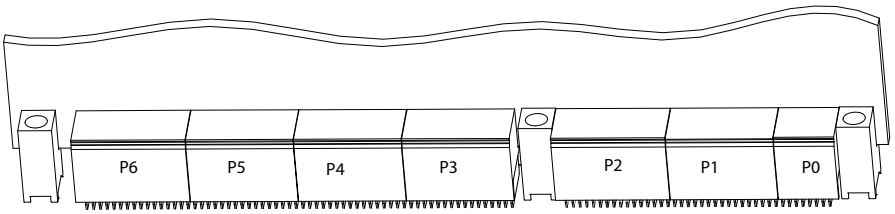

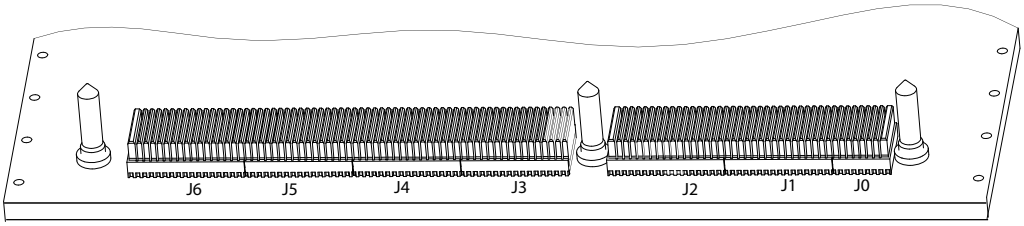

Daughtercard

Module Position		Part No. Ruggedized MULTIGIG RT 2-R (Extended Pad Wafers)	Part No. MULTIGIG RT 2 Connectors
PO		2102772-1	1410189-3
P1, P2, P3, P4, P5, P6	Differential	2102771-1	1410187-3
	Single-Ended	2102847-1	1410190-3

Keying Guide Modules	2000713-X Machined 6061 Aluminum Guide Socket, w/ESD Contact	1-1469492-X Standard (Zinc Die Cast) Guide Socket

See TE drawings for guide module and pin options.

Backplane

Module Position	Part No. Ruggedized MULTIGIG RT 2-R (Quad Redundant Contacts)	Part No. MULTIGIG RT 2 Connectors
JO	2102735-1	1410186-1
J1, J3, J4, J5	2102736-1	1410140-1
J2, J6	2102737-1	1410142-1

Keying Guide Pin	2000676-X Stainless Steel Guide Pin	1-1469491-X Standard (Zinc Die Cast) Guide Pin

See TE drawings for guide module and pin options.

Dimensions are shown for reference purposes only. Specifications subject to change.

Dimensions are in millimeters unless otherwise specified.

USA: +1 800 522 6752
Asia Pacific: +86 0 400 820 6015
UK: +44 800 267 666

For additional support numbers please visit www.te.com

MULTIGIG RT 2-R Ruggedized Connectors for VPX Applications (Continued)

Part Configurations

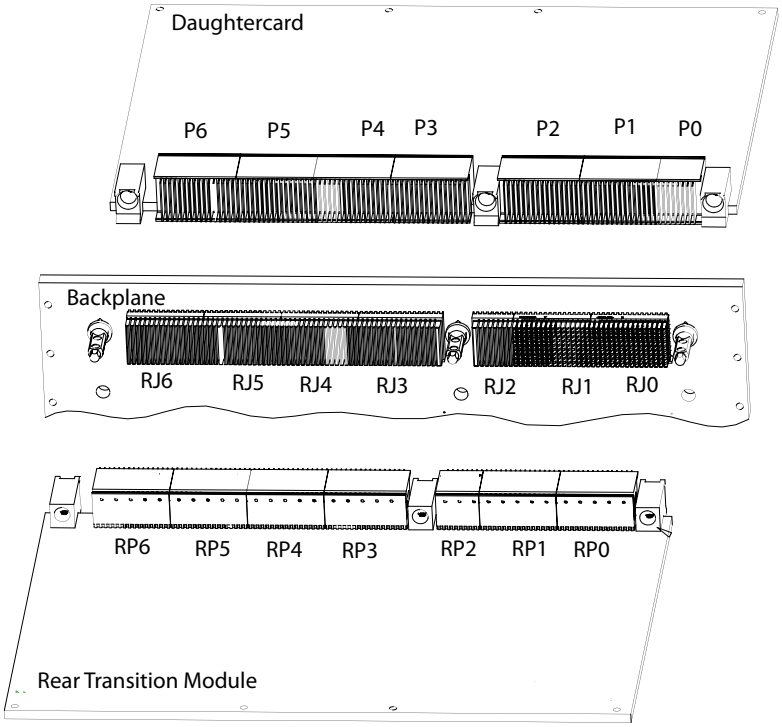

Rear Transition Module

Module Position MULTIGIG RT 2		Part No. Ruggedized MULTIGIG RT 2-R (Extended Pad Wafers)	Part No. Ruggedized MULTIGIG RT 2-R Connectors
RPO		2102773-1	1410968-3
RP1	Differential	2102774-1	1410975-3
	Differential & Single-Ended	2102849-1	1410970-3
RP2	Differential	2102775-1	1410971-3
	Single-Ended	2102848-1	1410972-3
RP3, RP4, RP5, RP6	Differential	2102774-1	1410975-3
	Single-Ended	2102847-1	1410190-3

Keying Guide Modules	2000713-X Machined 6061 Aluminum Guide Socket, w/ESD Contact	1-1469492-X Standard (Zinc Die Cast) Guide Socket

See TE drawings for guide module and pin options.

Rear Transition Backplane

Module Position		Part No. Ruggedized MULTIGIG RT 2-R (Quad Redundant Contacts)	Part No. MULTIGIG RT 2 Connectors
RJO	See Note 1	2102768-1	1410964-1
	See Note 2	2102850-1	1410965-1
RJ1	See Note 3	2102736-1	1410140-1
	See Note 4	2102851-1	1410966-1
RJ2		2102735-1	1410186-1
RJ3		2102737-1	1410142-1
RJ4, RJ5, RJ6		2102736-1	1410140-1

Keying Guide Pin	2226127-1 Stainless Steel Guide Pin	1410956-1 Standard (Zinc Die Cast) Guide Pin

Notes (Reference VITA 46.10; Observation 3-6):
Note 1: 16 column shell, 15 columns of contacts
Note 2: 16 column shell, 7 columns of contacts present
Note 3: 16 column shell, 16 columns of contacts
Note 4: 16 column shell, 8 columns of contacts present

Catalog 1308940
Revised 9-14

www.te.com

Dimensions are shown for reference purposes only. Specifications subject to change.

Dimensions are in millimeters unless otherwise specified.

USA: +1 800 522 6752
Asia Pacific: +86 0 400 820 6015
UK: +44 800 267 666

For additional support numbers please visit www.te.com

MULTIGIG RT 2-R Ruggedized Connectors for VPX Applications (Continued)

Associated VPX Solutions

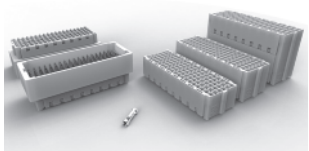

MEZALOK Mezzanine Connectors (Compliant to VITA 61)

- Utilizes the proven, reliable MIL-55302 Mini-Box contact interface, with four points of contact
- Backwards compatible with XMC board footprint
- Accommodates 10mm, 12mm, 15mm and 18mm stack heights
- Solder ball SMT attach in SnPb and RoHS options
- 114 (6 x 19) positions and 60 (6 x 10) positions
- Protected “stub-proof” socket contacts w/superior signal integrity
- Exceptional solder joint reliability (1000+ cycles thermal shock)

MULTI-BEAM XLE Power Connectors (Compliant to VITA 62)

- 20A and 50A power contacts, plus signal contacts
- 3-beam high-conductivity-copper contact design allows for a greater angular misalignment between mating connectors and offers a lower mating force
- Slim guide sockets reduce the overall PCB footprint
- Vented housing allows for better heat dissipation
- Hot-plug capable

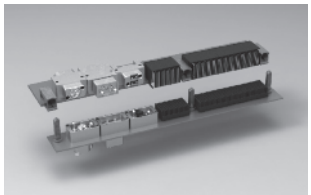

Optical Modules (Compliant to VITA 66)

- Light weight
- High bandwidth
- EMI immunity
- 3 fiber optic interface types available:
  - 66.1 has two MT ribbon ferrules up to 24 fibers each
  - 66.2 four ARINC 801 termini
  - 66.3 one expanded beam lensed insert with four fibers

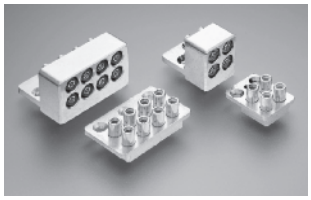

RF Modules (Compliant to VITA 67)

- Excellent channel-to-channel isolation and RF performance to 65 GHz
- Modular design permits application specific configuration with high RF contact count
- Float mounted jack maintains positive RF ground
- 240 center-to-center spacing
- 4 and 8 position modules are designed to meet the requirements of VITA 67.1 and VITA 67.2

Dimensions are shown for reference purposes only. Specifications subject to change.

Dimensions are in millimeters unless otherwise specified.

USA: +1 800 522 6752
Asia Pacific: +86 0 400 820 6015
UK: +44 800 267 666

For additional support numbers please visit www.te.com

Fortis Zd Connector

Product Facts

- **Allows 10+ Gb/s data rates**
- **Extreme mechanical and electrical performance for the most demanding applications**
- **Modular design allows for user configurability and modular evolution**
- **M55302 heritage Mini-Box separable interface provides 4 points of contact**
- **Three options for application versatility, including standard, shielded and rugged metal shell**
- **3-Pair and 2-Pair versions available to accommodate multiple slot pitches**
- **Space compatible materials**
- **Proven compliant pin board attach facilitates manufacturing efficiency, repairability, and superior electrical performance**
- **Staggered daughtercard pin field supports 2 level maintenance**
- **Protected pin field on backplane for reliability and durability**

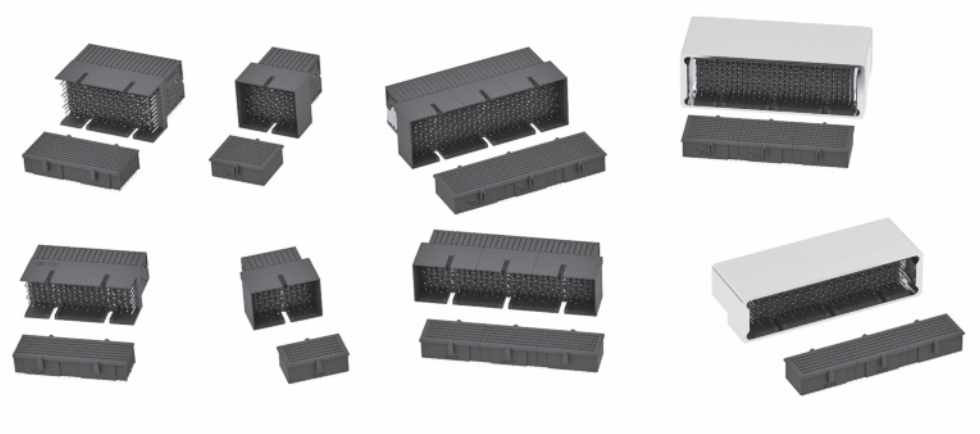

Description

Modular backplane connector system combining the highest performance mil/aero and commercial technologies in a user configurable platform.

Built to be the most robust and highest performance backplane connector.

Technical Documents

Product Specifications: 108-2409

Qualification Test Report: 501-752

Application Specification: 114-13267

Product Dimensions

2000896-1 (3-pair, Vertical Center Module)

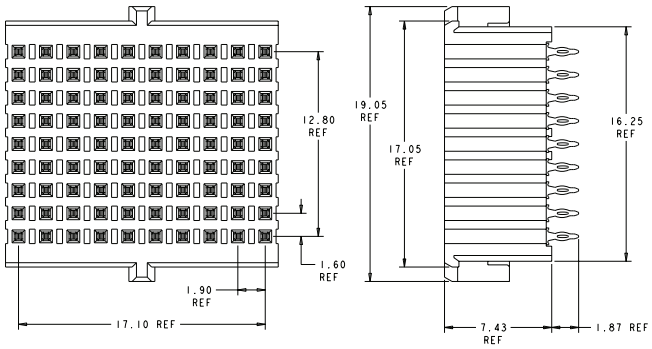

-1 (3-pair, Right-Angle Center Module)

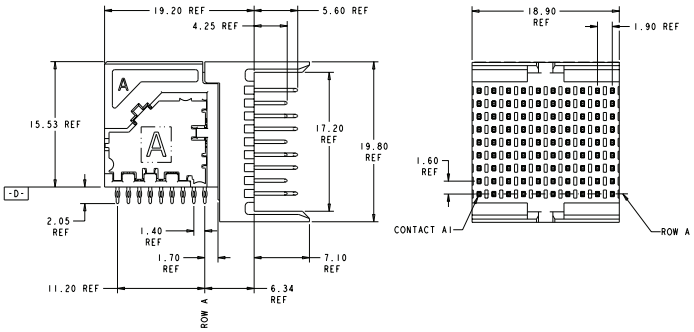

Catalog 1308940
Revised 9-14

www.te.com

Dimensions are shown for reference purposes only. Specifications subject to change.

Dimensions are in millimeters unless otherwise specified.

USA: +1 800 522 6752
Asia Pacific: +86 0 400 820 6015
UK: +44 800 267 666

For additional support numbers please visit www.te.com

Fortis Zd Connector (Continued)

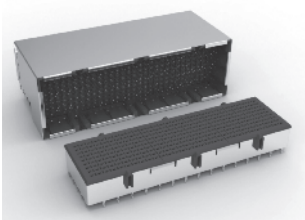

3-Bay Shielded

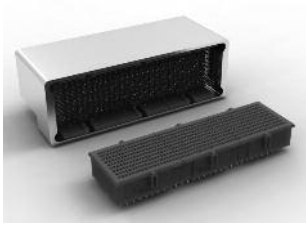

3-Bay Metal Shell

Mechanical

Durability: 500 mating cycles

Operating Temperature: -55 to +125˚C

Contact Engaging & Separating Force: 4.0 oz. max

Physical or Other Properties

10 and 20 column modules

3-pair (9-row) and 2-pair (6-row) modules

6U configuration offers 300 differential pairs

Multi-bay shielded and rugged shell options

6 row module enables 0.6” reduced form factor card pitch

Modularity enables scalability for various card sizes

Materials

Contacts: High performance copper alloy
Plated 50µin Au over 50µin Ni in mated contact area
Tin/lead or tin (RoHS) on compliant tails

Housings: High temperature thermoplastic

Shell:
Shield: Copper alloy
Rugged shell: 6061 Aluminum with trivalent chromate conversion coating

Ordering Information

Size	Description	Right Angle Connector Modules[1]						Vertical Connector Modules[1]				
		10-col. left	10-col. center	20-col. center	10-col. right	10-col. full shroud	20-col. full shroud	10-col. end	10-col. center	20-col. center	10-col. full shroud	20-col. full shroud
2-pair	Differential	2102086	2102087	2102096	2102088	2102081	2102232	2102092	2102093	2102098	2102094	2102234
3-pair	Differential	2000890	2000891	2000903	2000892	2102155	2102159	2000895	2000896	2000905	2102157	2102161
3-pair[2]	Single-Ended	2102314	2102315	2102316	2102317	2102318	2102319					

Size	Description	Shielded Right Angle Connector Modules						Shielded Vertical Connector Modules					
		10-col.	20-col.	30-col.	40-col.	50-col.	60-col.	10-col.	20-col.	30-col.	40-col.	50-col.	60-col.
3-pair	Differential	2102247-1	2102247-2	2102247-3	2102247-4	2102247-5	2102247-6	2102248-1	2102248-2	2102248-3	2102248-4	2102248-5	2102248-6
3-pair[2]	Single-Ended	2102320-1	2102320-3	2102320-4	2102320-4	2102320-5	2102320-6						

Size	Description	Rugged Shell for Right Angle Connector Modules					
		10-col.	20-col.	30-col.	40-col.	50-col.	60-col.
2-pair	Differential	2102114-1	2102114-2	2102114-3	2102114-4	2102114-5	2102114-6
3-pair	Differential	2102077-1	2102077-2	2102077-3	2102077-4	2102077-5	2102077-6

1. -1 SnPb Tails, -2 Sn Tails
2. Single-Ended 3-pair uses the same vertical connector as differential 3-pair

	VITA 46 Die Cast	VITA 46 Machined
Guide Pin	1469491	2000676
Guide Module	1469492	2000677 or 2000713

See drawings for dash number options.

Differential Insertion Loss

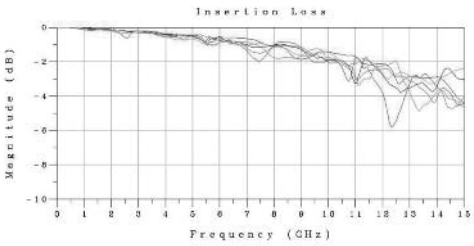

Differential Return Loss

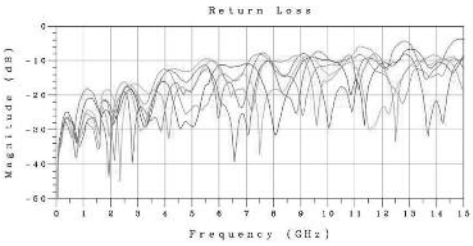

Dimensions are shown for reference purposes only. Specifications subject to change.

Dimensions are in millimeters unless otherwise specified.

USA: +1 800 522 6752
Asia Pacific: +86 0 400 820 6015
UK: +44 800 267 666

For additional support numbers please visit www.te.com

Mezalok Connector (High Reliability Mezzanine Connector)

Product Facts

- **Allows 10Gb/s and data rates**
- **60, 114, and 320 positions**
- **Mini-Box contact system provides 4 points of contact for ultra reliability**
- **LCP plastic housings offer superior thermal stability and are low-outgassing**
- **Compliant BGA board attach supports standard surface mount processing and excellent thermal stability**
- **114 position footprint compatible to XMC footprint and all dimensional constraints, VITA 61 compliant**
- **Stack heights from 10 mm to 18 mm**

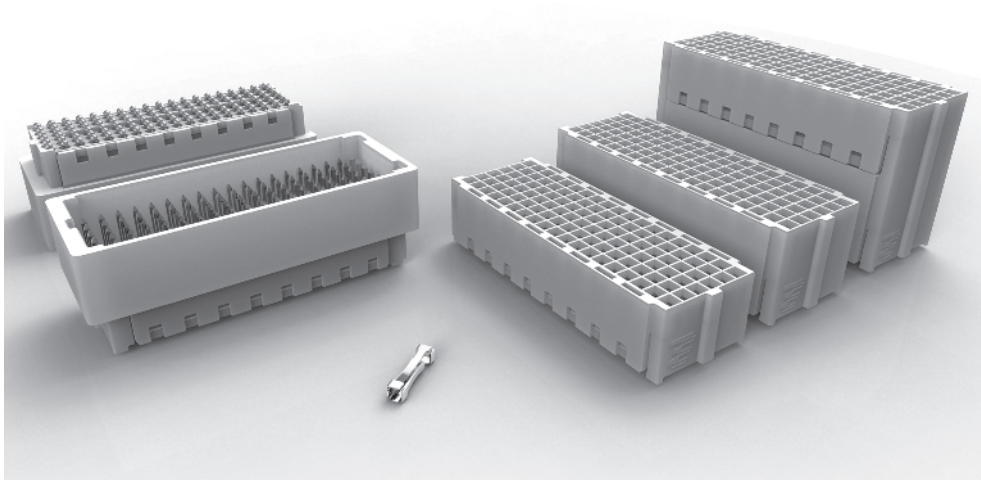

Technical Documents

Product Specifications: 108-2411

Qualification Test Report: 501-735

Application Specification: 114-13279

Description

Rugged surface mount mezzanine connector incorporating “super-redundant” Mini-Box contact system for separable interface.

Designed for 10 mm through 18 mm stack heights.

Applications

Stacking or mezzanine applications

114 position is designed to support VITA 61 XMC architecture as rugged alternative to VITA 42 XMC

60 and 320 position designed for custom architecture stacking applications

Mechanical

500 mating cycles durability

Mating force: 0.30 lb. max. times number of contacts

-65˚C to +125˚C operating temperature

Shock and vibration per VITA 47 requirements

Materials

Pin Assembly: LCP plastic housings, white in color

Socket Assembly: LCP plastic housings, white in color

Contacts: High Performance Copper Alloy, 50µ” Au in mating interface (Sn/Pb and SAC305 solder balls are available)

Standards & Specs

114 position conforms to requirement of VITA 61 (VITA 42 Alternate)

VITA 42 and VITA 61 are not intermateable, but are footprint and XMCarchitecture compatible

Application Tooling

Product is installed via standard BGA surface mount processes.

Catalog 1308940
Revised 9-14

www.te.com

Dimensions are shown for reference purposes only. Specifications subject to change.

Dimensions are in millimeters unless otherwise specified.

USA: +1 800 522 6752
Asia Pacific: +86 0 400 820 6015
UK: +44 800 267 666

For additional support numbers please visit www.te.com

Mezalok Connector (High Reliability Mezzanine Connector) (Continued)

Mini-box contact

No. of Pos.	Interface	Mated Stack Height (mm)	Part No.	Contact Plating	BGA Solder
60	pin		2102079-1	1.27 um gold	tin-lead
			2102079-2	1.27 um gold	lead free
			2102079-3	0.76 um gold	tin-lead
			2102079-4	0.76 um gold	lead free
	socket	10	2102080-1	1.27 um gold	tin-lead
			2102080-2	1.27 um gold	lead free
			2102080-5	0.76 um gold	tin-lead
			2102080-6	0.76 um gold	lead free
		12	2102080-3	1.27 um gold	tin-lead
			2102080-4	1.27 um gold	lead free
			2102080-7	0.76 um gold	tin-lead
			2102080-8	0.76 um gold	lead free
		18	2102080-9	1.27 um gold	tin-lead
			1-2102080-0	1.27 um gold	lead free
			1-2102080-1	0.76 um gold	tin-lead
			1-2102080-2	0.76 um gold	lead free
114	pin		2102060-1	1.27 um gold	tin-lead
			2102060-2	1.27 um gold	lead free
			2102060-3	0.76 um gold	lead free
			2102060-4	0.76 um gold	lead free
	socket	10	2102061-1	1.27 um gold	tin-lead
			2102061-2	1.27 um gold	lead free
			2102061-5	0.76 um gold	tin-lead
			2102061-6	0.76 um gold	lead free
		12	2102061-3	1.27 um gold	tin-lead
			2102061-4	1.27 um gold	lead free
			2102061-7	0.76 um gold	tin-lead
			2102061-8	0.76 um gold	lead free
		15	1-2102061-3	1.27 um gold	tin-lead
			1-2102061-4	1.27 um gold	lead free
			1-2102061-5	0.76 um gold	tin-lead
			1-2102061-6	0.76 um gold	lead free
		18	2102061-9	1.27 um gold	tin-lead
			1-2102061-0	1.27 um gold	lead free
			1-2102061-1	0.76 um gold	tin-lead
			1-2102061-2	0.76 um gold	lead free
320	pin		2102429-1	1.27 um gold	tin-lead
			2102429-2	1.27 um gold	lead free
			2102429-3	0.76 um gold	tin-lead
			2102429-4	0.76 um gold	lead free
	socket	10	2102430-1	1.27 um gold	tin-lead
			2102430-2	1.27 um gold	lead free
			2102430-5	0.76 um gold	tin-lead
			2102430-6	0.76 um gold	lead free
		18	2102430-9	1.27 um gold	tin-lead
			1-2102430-0	1.27 um gold	lead free
			1-2102430-1	0.76 um gold	tin-lead
			1-2102430-2	0.76 um gold	lead free

Pin — 2102060

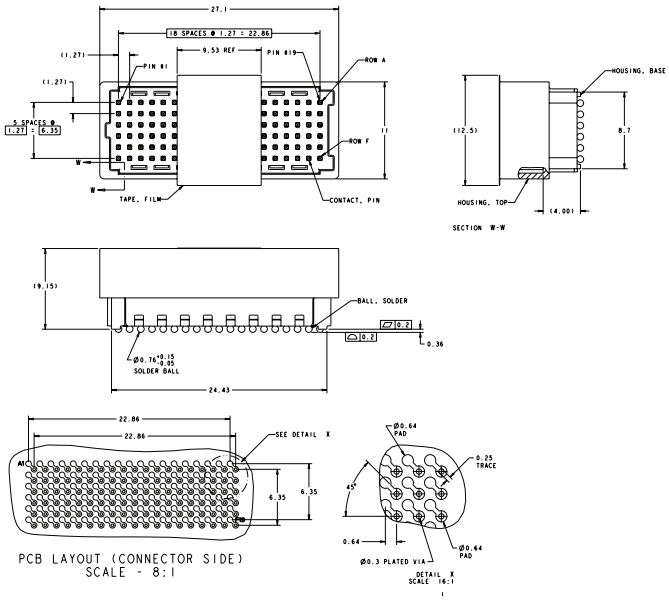

Socket — 2102061

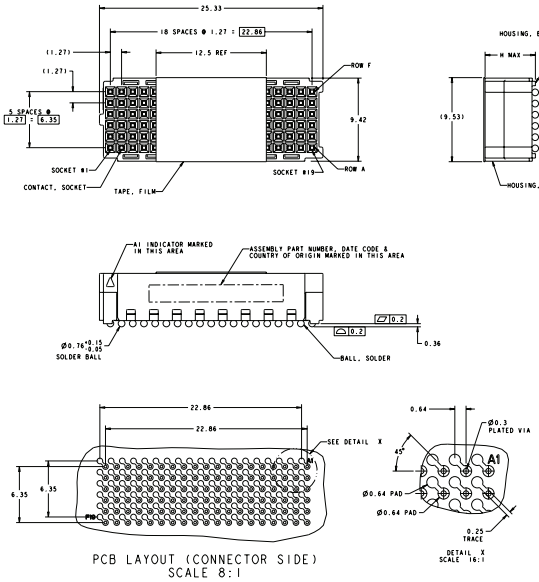

Dimensions are shown for reference purposes only. Specifications subject to change.

Dimensions are in millimeters unless otherwise specified.

USA: +1 800 522 6752
Asia Pacific: +86 0 400 820 6015
UK: +44 800 267 666

For additional support numbers please visit www.te.com

Introduction

Mini-Box .050 [1.27] Centerline Connectors

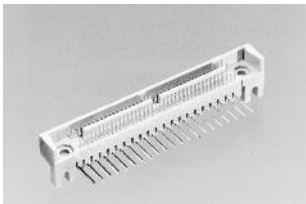

Mini-Box Contact Connectors, per MIL-C-55302 are available in 2-row configurations with pin counts from 20 to 200 positions and uses the reliable 4-beam box contact and 4-row configurations up to 320 positions. The tighter centerline spacing, .050 x .150 [1.27 x 3.81] in 2-row, .050 x .100 [1.27 x 2.54] in 4-row, provides more pins within a specified distance and the staggered footprint allows for easier manufacturing of the pc boards.

Standard receptacles are thru-hole flow solder, surface mount, press fit tail and straddle mount. Standard pin headers are available in a choice of surface mount, straddle mount or right-angle configurations.

Extended receptacles are vertical thru-hole and pin headers are available in straddle mount or right-angle thru-hole versions.

In addition, Mini-Box 2-row connectors are available with 4 or 6 hybrid cavities which accept micro-miniature coax contacts or a choice of high voltage pin and socket contacts.

TE Connectivity Mini-Box connectors are also available in 4-row connector configurations. Vertical mount receptacle assemblies and pin headers with flexible circuit tails.

AMP-HDI .050 [1.27] and .075 [1.91] Centerline Connectors

This family includes .050 [1.27] stacking connectors and 6 & 8 Row LRM (Line Replaceable Module) Connectors

Designed specifically to be the next generation, high density electronic packaging system, the AMP-HDI 6 Row, .075 [1.91] centerlines and 8 Row, .080 [2.03] centerlines, LRM Interconnection System meets applicable DSCC 89065 LRM specifications. This advanced system features high temperature plastic housings compatible with IR reflow solder techniques. Added advantage of the AMP-HDI LRM System is its capability of accepting MIL SPEC fiber optic contacts per MIL-T29504/5. Six-row configurations available in 306 contact positions. Eight-row configurations feature two 214 position plug halves which mate with one 428-position receptacle. This technological leader is offered with standard tin-lead plated solder tails and for those applications where maintaining a light weight system is a factor. The 8-row configuration is made available with weight saving, flexible film tails.

Equally important are Application Costs. The AMP-HDI LRM interconnection system offers advanced tooling that simplifies contact alignment to the pc board, substantially reducing overall applied labor costs.

.075 [1.91] & .100 [2.54] Centerline Box Contact Connectors

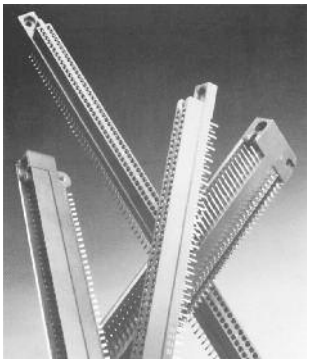

Box Contact Connectors with contacts on .075 [1.91] & .100 [2.54] centerline spacing are available in 2, 3 and 4-row configurations with pin counts up to 300 contact positions. Box contact connectors use this unique, reliable four-beam design which offers low applied cost while maintaining high reliability and performance.

Commercial military versions are available for both pin headers and receptacles.

Box II vertical receptacles with ACTION PIN Posts and Solder Post Contacts are also available. When mated with AMP-HDI pin assemblies, these permit horizontal stacking of motherboards. 2, 3, and 4-row connector versions are available.

.100 [2.54] Centerline Connectors

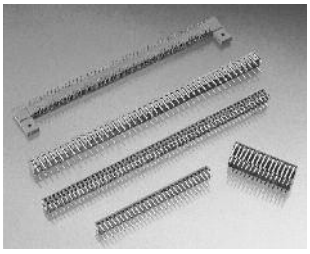

AMPMODU Board-Mount Receptacle Assemblies are qualified to MIL-C-55302, and provide a compact and versatile means of interconnecting today's complex electronic modules. Right-angle receptacle connectors mate with .025[2] [0.64[2]] posts, have dual cantilever spring contact design and built-in anti-overstress, duplex gold-over-nickel plating, and wide misalignment tolerances. Contacts are on .100 [2.54] centerlines, and are available in single or double row, blue diallyl phthalate housings. Assemblies will accommodate pcb .062 [1.57] or .093 [2.36] thick.

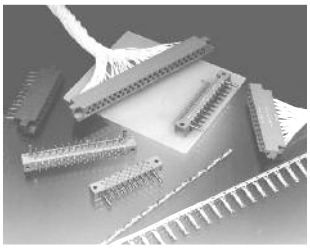

AMP-BLADE Two-Piece PC Edge Connectors provide high levels of conductivity and reliability to meet the performance specifications of MIL-C-21097, and the design requirements of MIL-E-5400. Blade and receptacle contacts, on .100 [2.54] centerlines provide multiple areas of contact for maximum conductivity. Blade contacts are gold plated in the contact mating area, with tin-lead on the solder tails all over nickel underplate.

PC board housings are available with or without mounting hole while cable-mount connectors are designed for maximum versatility, and will accept a variety of receptacle contact designs.

Catalog 1308940
Revised 9-14

www.te.com

Dimensions are shown for reference purposes only. Specifications subject to change.

Dimensions are in millimeters unless otherwise specified.

USA: +1 800 522 6752
Asia Pacific: +86 0 400 820 6015
UK: +44 800 267 666

For additional support numbers please visit www.te.com

Introduction

Product Facts

- **Contacts are on .050 x .150 [1.27 x 3.81] centers**
- **Four-beam box-type receptacle contact design provides four areas of contact per connection**
- **Quad-beam contact redundancy makes it an excellent choice in high-vibration environments**
- **2-row standard versions: 2 to 120 contact positions**
- **2-row extended versions: 132 to 200 contact positions**
- **4-row versions: 120 to 320 contact positions**
- **Sealed versions available**
- **Pin headers are available in straddle mount (with or without pin protectors) and right-angle versions (with pin protectors)**
- **Solder tails on receptacles and right-angle pin headers are staggered for easy access**
- **Hybrid connectors with coaxial and signal contacts available**
- **Qualified to MIL-C-55302/117, /118, /119**
- **2 row and 4 row versions available**

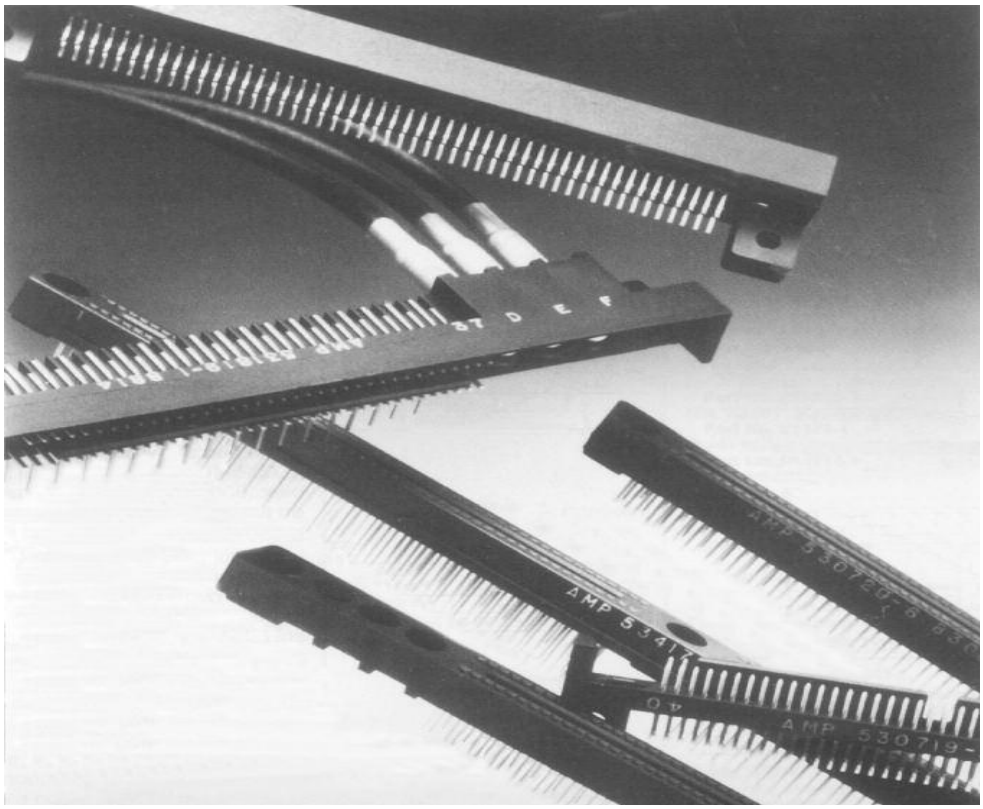

TE Connectivity Mini-Box .050 [1.27] centerline connectors are available in 2-row connector configurations having 20 to 128 contact positions in the standard version, and 132 to 200 contact positions in the extended version.

Standard Mini-Box receptacle assemblies are available with a choice of thru-hole, surface-mount or straddle mount solder tails. Standard Mini-Box pin headers are designed with surface-mount, straddle mount, and thru-hole right-angle solder tails.

Extended receptacle assemblies are vertical-mount thru-hole configurations, and pin headers are in a choice of straddle mount or thru-hole versions.

A 4-row version for compact high count connections* is offered in thru-hole receptacle and straddle mount pin header configurations.

Mini-Box connectors are also available in four or six cavity hybrid configurations with 26 to 74-Mini-Box contacts.

Coaxial Cavities in the hybrid Mini-Box connectors will also accept high voltage pin or socket contacts with operating voltage up to 5KVDC.

External keying is an added feature of the TE Mini-Box connector family. External keys are used with receptacle assemblies and pin headers. Keys used in one end of each mated pair will yield eight keying combinations. If used in both ends sixty-four keying combinations are possible.

*up to 360 positions

Performance Characteristics

Rated Current — 1.5 amps per contact

Operating Temperature Range — -85° to 257°F [-65° to 125° C]

Maximum Mating Force — .3 lb. [.08N] per contact

Durability — 500 cycles of mating and unmating

Dielectric Withstanding Voltage — 600 VAC at sea level, 150 VAC at 70,000 feet

Technical Documents

Product Specifications

108-9046 Connector Mini-Box Contact

108-1663 Connector Mini-Box Contact with Compliant Printed Wiring Board Termination

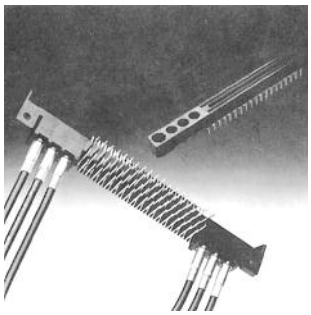

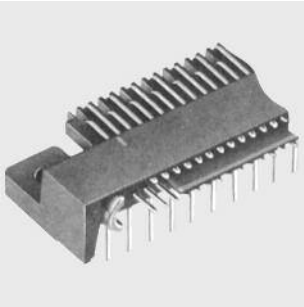

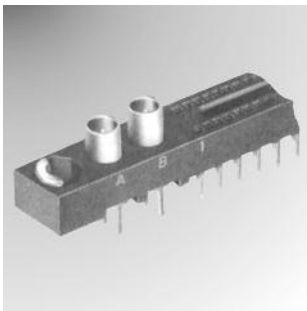

Catalog 1308940
Revised 9-14

www.te.com

Dimensions are shown for reference purposes only. Specifications subject to change.

Dimensions are in millimeters unless otherwise specified.

USA: +1 800 522 6752
Asia Pacific: +86 0 400 820 6015
UK: +44 800 267 666

For additional support numbers please visit www.te.com

Mini-Box Receptacle Assemblies for Flow Soldering — MIL-C-55302 Qualified

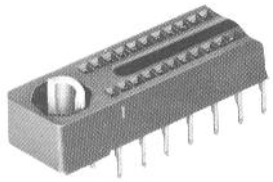

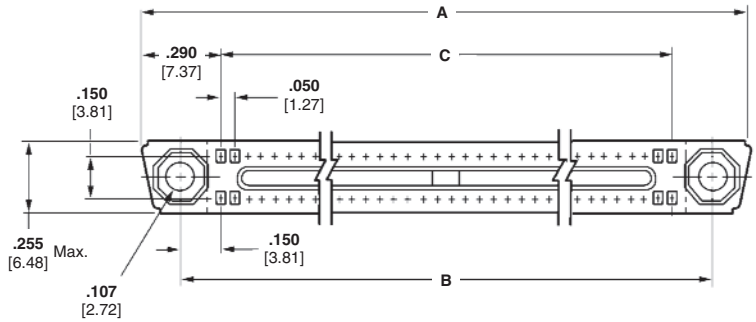

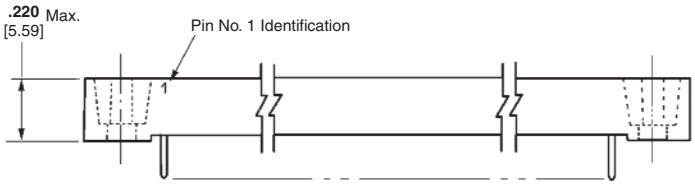

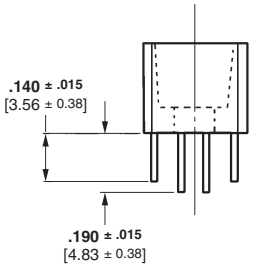

530720 and 530745 Series

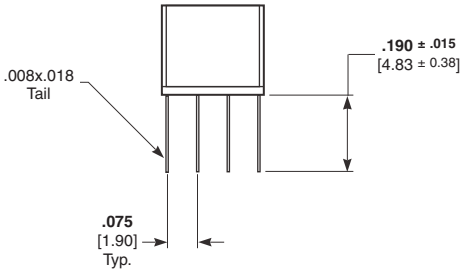

534175 Series

Housing Material — In accordance with MIL-M-24519 per MIL-C-55302. GLCP-30F, liquid crystal polymer

Contact Material and Finish — Commercial receptacle — Beryllium copper per QQ-C-533 or ASTM B768, or phosphor bronze per ASTM B103 plated .000030 [0.00076] min. gold in the mating area, .000100 [0.00254] min. tin-lead in the terminating area over .000030 [0.00076] min. nickel on the entire contact; Military receptacle — Beryllium copper per QQ-C-533 or ASTM B768, or phosphor bronze per ASTM B103 plated .000050 [0.00127] min. gold in the mating area, .000100 [0.00254] min. tin-lead in the terminating area over .000030 [0.00076] min. nickel on the entire contact

Related Product Data

Mates with — Pin headers, pages 1-21 to 1-22

External Keying — page 1-30

Recommended PC Board Layout — page 1-28

No. of Pos.	Dimensions			Assembly Part Nos.		Military Assembly Part Nos.		
	A	B	C	Commercial	Epoxy Sealed*	M55302/	Unsealed	Sealed
128	**3.740** 95.00	**3.450** 87.63	**3.150** 80.01	530720-9	534175-1	119-11	1-530745-1	2-530745-2
110	**3.290** 83.57	**3.000** 76.2	**2.700** 68.58	530720-8	534175-2	119-10	1-530745-0	2-530745-1
100	**3.040** 77.22	**2.750** 69.85	**2.450** 62.23	530720-7	534175-3	119-09	530745-9	2-530745-0
90	**2.790** 70.87	**2.500** 63.5	**2.200** 55.88	530720-6	534175-4	119-08	530745-8	1-530745-9
80	**2.540** 64.52	**2.250** 57.15	**1.950** 49.53	530720-5	534175-5	119-07	530745-7	1-530745-8
70	**2.290** 58.17	**2.000** 50.8	**1.700** 43.18	530720-4	534175-6	119-06	530745-6	1-530745-7
60	**2.040** 51.82	**1.750** 44.45	**1.450** 36.83	530720-3	534175-7	119-05	530745-5	1-530745-6
50	**1.790** 45.47	**1.500** 38.1	**1.200** 30.48	530720-2	534175-8	119-04	530745-4	1-530745-5
40	**1.540** 39.12	**1.250** 31.75	**.950** 24.13	530720-1	534175-9	119-03	530745-3	1-530745-4
30	**1.290** 32.77	**1.000** 25.4	**.700** 17.78	1-530720-0	1-534175-0	119-02	530745-2	1-530745-3
20	**1.040** 26.42	**.750** 19.05	**.450** 11.43	1-530720-1	1-534175-1	119-01	530745-1	1-530745-2

Note: Contact Align—Part Number 58107-1
*Same contact material and finish per military receptacle

Dimensions are shown for reference purposes only. Specifications subject to change.

Dimensions are in millimeters unless otherwise specified.

USA: +1 800 522 6752
Asia Pacific: +86 0 400 820 6015
UK: +44 800 267 666

For additional support numbers please visit www.te.com

Mini-Box Receptacle Assemblies for Flow Soldering — MIL-C-55302 Qualified (Continued)

Vertical, Surface-Mount

Material and Finish

Housing — In accordance with MIL-M-24519 per MIL-C-55302. GLCP-30F, liquid crystal polymer, grey

Contacts — Beryllium copper per QQ-C-533 or ASTM B768, or phosphor bronze per ASTM B103 plated .000050 [0.00127] min. gold in themating area, .000100 [0.00254] min. tin-lead in the terminating area, over .000030 [0.00076] min. nickel on the entire contact

Related Product Data

Mates with — Pin headers, pages 1-21 to 1-22

External Keying — page 1-30

Recommended PC Board Layout — page 1-28

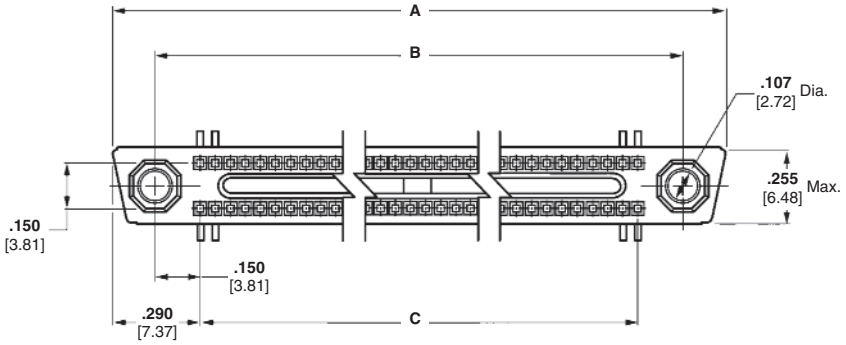

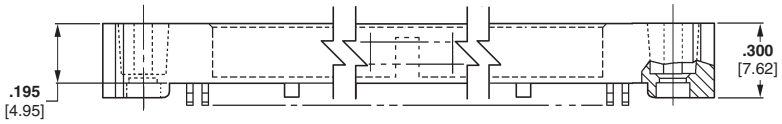

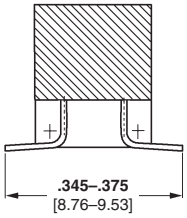

No. of Pos.	Dimensions A	Dimensions B	Dimensions C	Assembly Part No.
128	**3.740** 95.00	**3.450** 87.63	**3.150** 80.01	1-449599-1
110	**3.290** 83.57	**3.000** 76.20	**2.700** 68.58	1-449599-0
100	**3.040** 77.22	**2.750** 69.85	**2.450** 62.23	449599-9
90	**2.790** 70.87	**2.500** 63.50	**2.200** 55.88	449599-8
80	**2.540** 64.52	**2.250** 57.15	**1.950** 49.53	449599-7
70	**2.290** 58.17	**2.000** 50.80	**1.700** 43.18	449599-6
60	**2.040** 51.82	**1.750** 44.45	**1.450** 36.83	449599-5
50	**1.790** 45.47	**1.500** 38.10	**1.200** 30.48	449599-4
40	**1.540** 39.12	**1.250** 31.75	**.950** 24.13	449599-3
30	**1.290** 32.77	**1.000** 25.40	**.700** 17.78	449599-2
20	**1.040** 26.42	**.750** 19.05	**.450** 11.43	449599-1

Dimensions are shown for reference purposes only. Specifications subject to change.

Dimensions are in millimeters unless otherwise specified.

USA: +1 800 522 6752
Asia Pacific: +86 0 400 820 6015
UK: +44 800 267 666

For additional support numbers please visit www.te.com

Mini-Box Straddle Mount Receptacle Assemblies

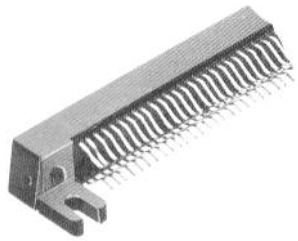

Housing Material — Liquid crystal polymer

Contact Material and Finish — Beryllium copper per QQ-C-533 or ASTM B768, or phosphor bronze per ASTM B103 plated .000050 [0.00127] min. gold in the mating area, .000100 [0.00254] min. tin-lead in the terminating area over .000030 [0.00076] min. nickel on the entire contact

Related Product Data

Mates with — Pin headers, pages 1-21 to 1-22

External Keying — page 1-30

Recommended PC Board Layout — page 1-28

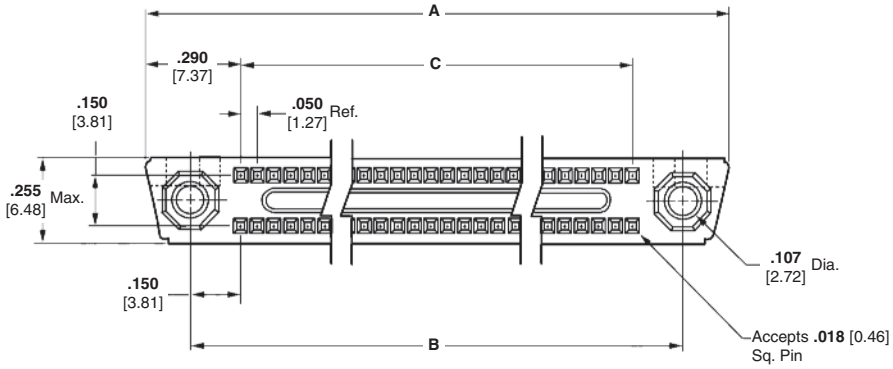

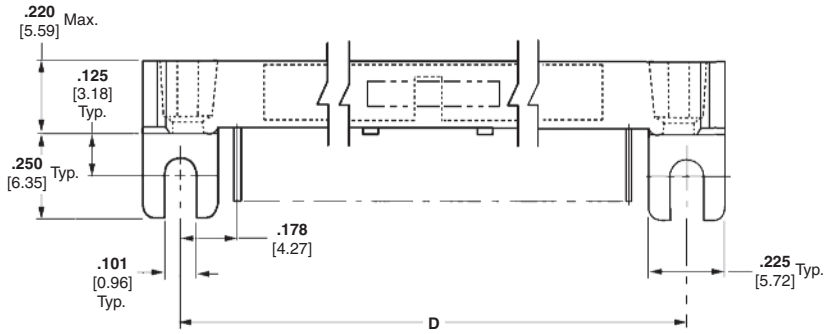

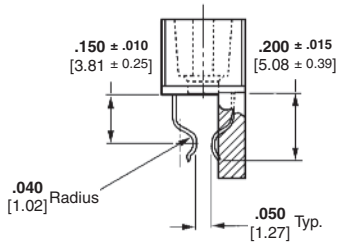

No. of Pos.	Dimensions				Assembly Part No.
	A	B	C	D	
128	**3.740** 95.00	**3.450** 87.63	**3.150** 80.01	**3.505** 89.03	445185-1
110	**3.290** 83.57	**3.000** 76.2	**2.700** 68.58	**3.055** 77.60	445185-2
100	**3.040** 77.22	**2.750** 69.85	**2.450** 62.23	**2.805** 71.25	445185-3
90	**2.790** 70.87	**2.500** 63.5	**2.200** 55.88	**2.555** 64.90	445185-4
80	**2.540** 64.52	**2.250** 57.15	**1.950** 49.53	**2.305** 58.55	445185-5
70	**2.290** 58.17	**2.000** 50.8	**1.700** 43.18	**2.055** 52.20	445185-6
60	**2.040** 51.82	**1.750** 44.45	**1.450** 36.83	**1.805** 45.85	445185-7
50	**1.790** 45.47	**1.500** 38.1	**1.200** 30.48	**1.555** 39.50	445185-8
40	**1.540** 39.12	**1.250** 31.75	**.950** 24.13	**1.305** 33.15	445185-9
30	**1.290** 32.77	**1.000** 25.4	**.700** 17.78	**1.055** 26.80	1-445185-0
20	**1.040** 26.42	**.750** 19.05	**.450** 11.43	**.805** 20.45	1-445185-1

Dimensions are shown for reference purposes only. Specifications subject to change.

Dimensions are in millimeters unless otherwise specified.

USA: +1 800 522 6752
Asia Pacific: +86 0 400 820 6015
UK: +44 800 267 666

For additional support numbers please visit www.te.com

Mini-Box Pin Header Assemblies

Vertical, Surface Mount

Material and Finish

Housing — In accordance with MIL-M-24519 per MIL-C-55302. GLCP-30F, liquid crystal polymer, grey

Contacts — Brass per QQ-B-626, plated .000050 [0.00127] min. gold in the mating area, .000100 [0.00254] min. tin-lead in the terminating area, over .000030 [0.00076] min. nickel on the entire contact

Related Product Data

Mates with — Receptacle assemblies, pages 1-18 to 1-20

External Keying — page 1-30

Recommended PC Board Layout — page 1-28

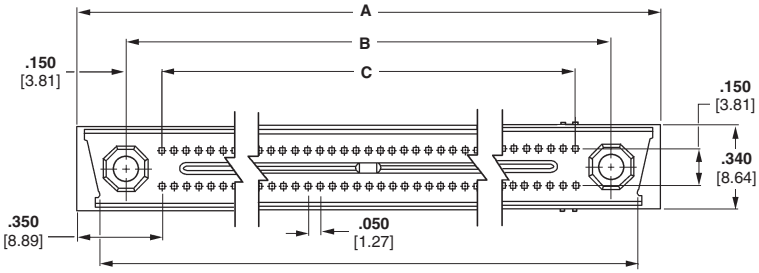

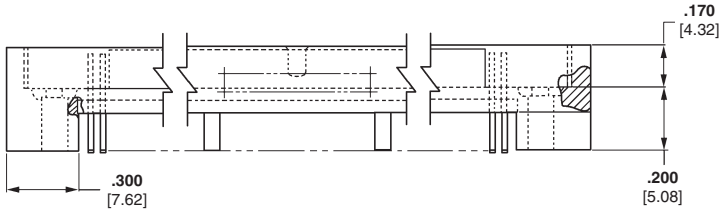

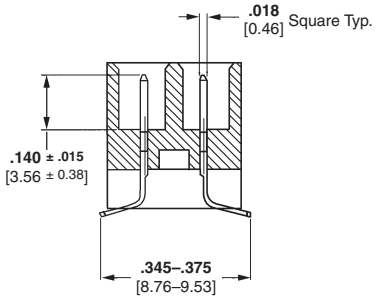

No. of Pos.	Dimensions A	Dimensions B	Dimensions C	Assembly Part No.
128	**3.850** 97.79	**3.450** 87.63	**3.150** 80.01	447441-3
110	**3.400** 86.36	**3.000** 76.20	**2.700** 68.58	447441-1
100	**3.150** 80.01	**2.750** 69.85	**2.450** 62.23	447441-4
90	**2.900** 73.66	**2.500** 63.50	**2.200** 55.88	447441-5
80	**2.650** 67.31	**2.250** 57.15	**1.950** 49.53	447441-6
70	**2.400** 60.96	**2.000** 50.80	**1.700** 43.18	447441-2
60	**2.150** 54.61	**1.750** 44.45	**1.450** 36.83	447441-7
50	**1.900** 48.26	**1.500** 38.10	**1.200** 30.48	447441-8
40	**1.650** 41.91	**1.250** 31.75	**.950** 24.13	447441-9
30	**1.400** 35.56	**1.000** 25.40	**.700** 17.78	1-447441-0
20	**1.150** 29.21	**.750** 19.05	**.450** 11.43	1-447441-1

Dimensions are shown for reference purposes only. Specifications subject to change.

Dimensions are in millimeters unless otherwise specified.

USA: +1 800 522 6752
Asia Pacific: +86 0 400 820 6015
UK: +44 800 267 666

For additional support numbers please visit www.te.com

Mini-Box Pin Header Assemblies (Continued)

Related Product Data

Mates with — Receptacles, pages 1-21 to 1-22

External Keying — Page 1-30

Recommended PC Board Layout — Page 1-28

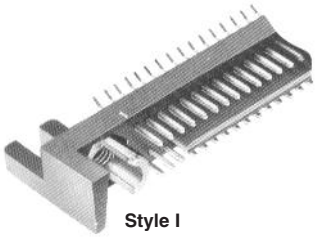
Style I

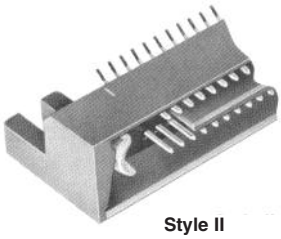
Style II

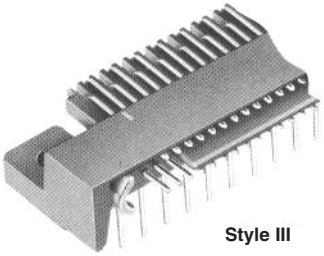
Style III

Commercial Pin Header Assemblies

Housing Material — In accordance with MIL-M-24519 per MIL-C-55302 GLCP-30F, liquid crystal polymer

Contact Material and Finish — Brass per QQ-B-626 plated .000030 [0.00076] min. gold in the contact area, .000100 [0.00254] min. tin-lead on the tail over .000050 [0.00127] min. nickel on the entire contact

No. of Pos.	Dimensions A	Dimensions B	Dimensions C	Style I Straddle Mount Part No.	Style II Straddle Mt. w/Pin Protect. Part No.	Style III Right-Angle Mount Part No.
128	**3.850** 97.79	**3.600** 91.44	**3.150** 80.01	530719-9	1-531122-1	530733-9
110	**3.400** 86.36	**3.150** 80.01	**2.700** 68.58	—	—	530733-8
100	**3.150** 80.01	**2.900** 73.66	**2.450** 62.23	530719-7	—	530733-7
90	**2.900** 73.66	**2.650** 67.31	**2.200** 55.88	530719-6	—	530733-6
80	**2.650** 67.31	**2.400** 60.96	**1.950** 49.53	530719-5	—	530733-5
70	**2.400** 60.96	**2.150** 54.61	**1.700** 43.18	530719-4	531122-6	530733-4
60	**2.150** 54.61	**1.900** 48.26	**1.450** 36.83	530719-3	531122-5	530733-3
50	**1.900** 48.26	**1.650** 41.91	**1.200** 30.48	530719-2	—	530733-2
40	**1.650** 41.91	**1.400** 35.56	**.950** 24.13	530719-1	—	530733-1
30	**1.400** 35.56	**1.150** 29.21	**.700** 17.78	—	—	1-530733-0
20	**1.150** 29.21	**.900** 22.86	**.450** 11.43	—	—	1-530733-1

Military Pin Header Assemblies — Qualified to MIL-C-55302

Housing Material — In accordance with MIL-C-55302

Contact Material and Finish — Brass per QQ-B-626 plated .000050 [0.00127] min. gold in the contact area, .000100 [0.00254] min. tin-lead on the tail over .000050 [0.00127] min. nickel on the entire contact.

No. of Pos.	Dimensions A	Dimensions B	Dimensions C	Style I - Straddle Mount MIL-C-55302/	Style I - Straddle Mount Part No.	Style II - Straddle Mt. w/ Pin Protect. MIL-C-55302/	Style II - Straddle Mt. w/ Pin Protect. Part No.	Style III - Right-Angle MIL-C-55302/	Style III - Right-Angle Part No.
128	**3.850** 97.79	**3.600** 91.44	**3.150** 80.01	118-11	2-530744-2	118-22	2-531803-2	117-11	2-530743-2
110	**3.400** 86.36	**3.150** 80.01	**2.700** 68.58	118-10	2-530744-1	118-21	2-531803-1	117-10	2-530743-1
100	**3.150** 80.01	**2.900** 73.66	**2.450** 62.23	118-09	2-530744-0	118-20	2-531803-0	117-09	2-530743-0
90	**2.900** 73.66	**2.650** 67.31	**2.200** 55.88	118-08	1-530744-9	118-19	1-531803-9	117-08	1-530743-9
80	**2.650** 67.31	**2.400** 60.96	**1.950** 49.53	118-07	1-530744-8	118-18	1-531803-8	117-07	1-530743-8
70	**2.400** 60.96	**2.150** 54.61	**1.700** 43.18	118-06	1-530744-7	118-17	1-531803-7	117-06	1-530743-7
60	**2.150** 54.61	**1.900** 48.26	**1.450** 36.83	118-05	1-530744-6	118-16	1-531803-6	117-05	1-530743-6
50	**1.900** 48.26	**1.650** 41.91	**1.200** 30.48	118-04	1-530744-5	118-15	1-531803-5	117-04	1-530743-5
40	**1.650** 41.91	**1.400** 35.56	**.950** 24.13	118-03	1-530744-4	118-14	1-531803-4	117-03	1-530743-4
30	**1.400** 35.56	**1.150** 29.21	**.700** 17.78	118-02	1-530744-3	118-13	1-531803-3	117-02	1-530743-3
20	**1.150** 29.21	**.900** 22.86	**.450** 11.43	118-01	1-530744-2	118-12	1-531803-2	117-01	1-530743-2

Dimensions are shown for reference purposes only. Specifications subject to change.

Dimensions are in millimeters unless otherwise specified.

USA: +1 800 522 6752
Asia Pacific: +86 0 400 820 6015
UK: +44 800 267 666

For additional support numbers please visit www.te.com

Mini-Box Pin Header Assemblies (Continued)

Style I
Straddle Mount without Pin Protectors

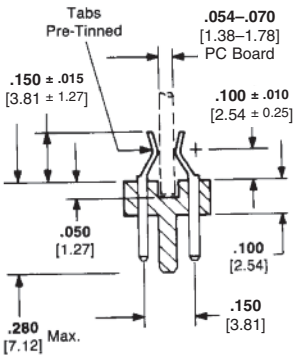

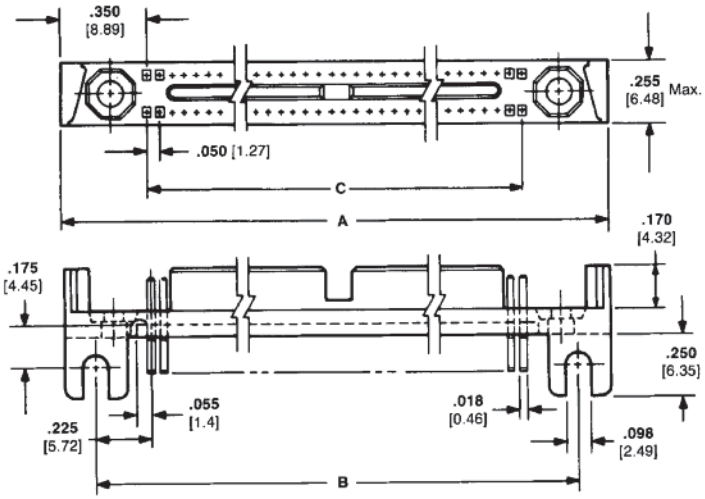

Style II
Straddle Mount with Pin Protectors

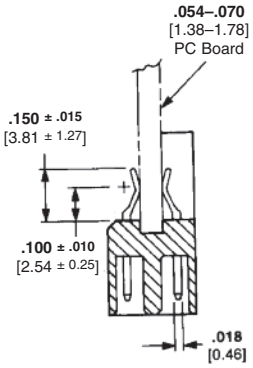

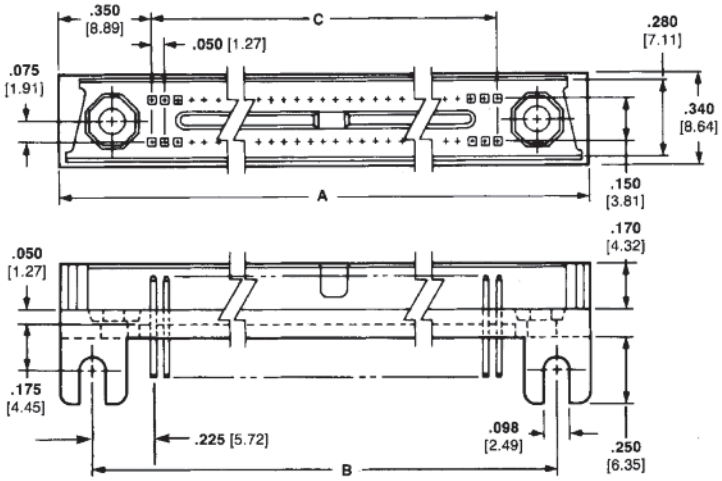

Style III
Right-Angle Mount

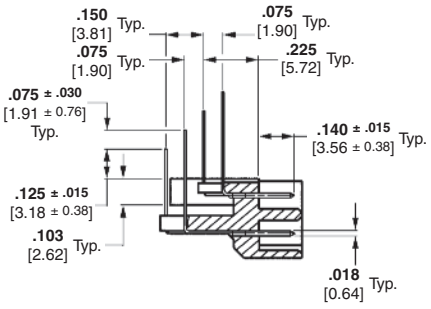

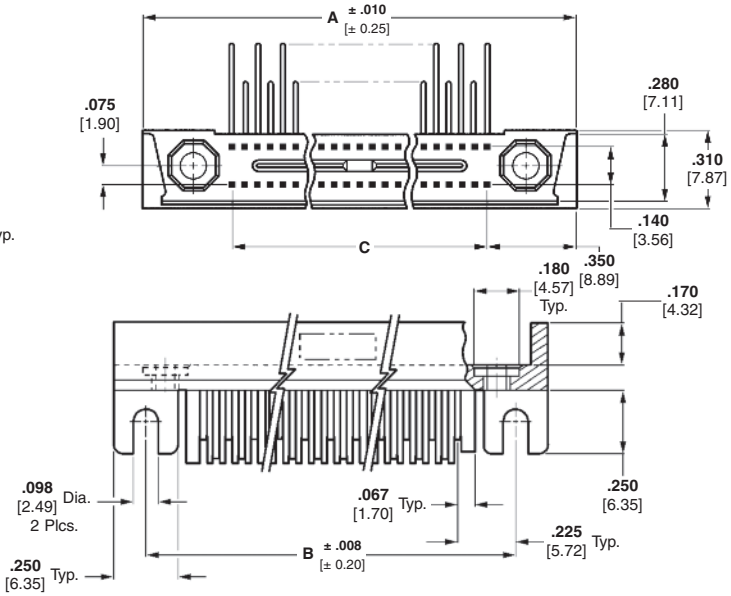

Dimensions are shown for reference purposes only. Specifications subject to change.

Dimensions are in millimeters unless otherwise specified.

USA: +1 800 522 6752
Asia Pacific: +86 0 400 820 6015
UK: +44 800 267 666

For additional support numbers please visit www.te.com

Extended Mini-Box Receptacle Assemblies

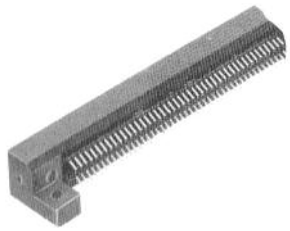

Housing Material — Liquid crystal polymer

Contact Material and Finish — Beryllium copper per QQ-C-533 or ASTM B768, or phosphor bronze per ASTM B103 plated .000050 [0.00127] min. gold in the mating area, .000100 [0.00254] min. tin-lead in the terminating area over .000030 [0.00076] min. nickel on the entire contact

Related Product Data

Mates with — Straddle mount pin header assembly, page 1-23, and right-angle pin header, page 1-24

External Keying — page 1-30

Recommended PC Board Layout — page 1-28

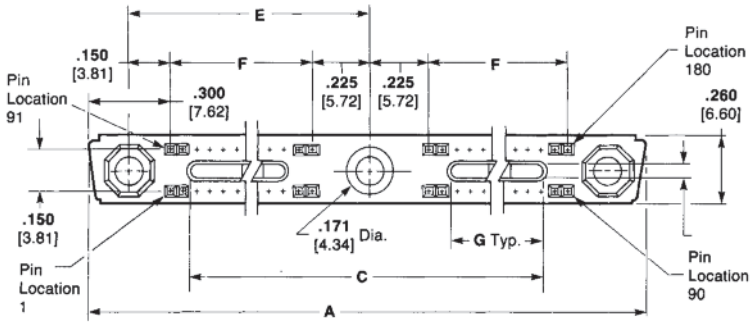

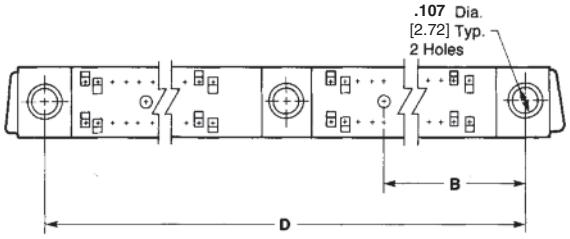

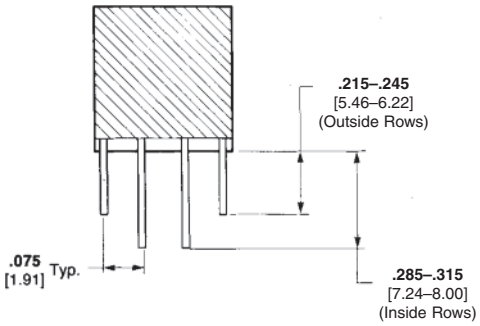

No. of Pos.	Dimensions							Assembly Part No.
	A	B	C	D	E	F	G	
200	**5.950** 151.13	**1.413** 35.89	**5.200** 132.08	**5.650** 143.51	**2.825** 71.76	**2.450** 62.23	**2.300** 58.42	534179-8
192	**5.750** 146.05	**1.362** 34.60	**5.000** 127.00	**5.450** 138.43	**2.725** 69.22	**2.350** 59.69	**2.200** 55.88	534179-7
180	**5.450** 138.43	**1.287** 32.69	**4.700** 119.38	**5.150** 130.81	**2.575** 65.41	**2.200** 55.88	**2.050** 52.07	534179-6
172	**5.250** 133.35	**1.237** 31.42	**4.500** 114.30	**4.950** 125.73	**2.475** 62.87	**2.100** 53.34	**1.950** 49.53	534179-5
160	**4.950** 125.73	**1.162** 29.52	**4.200** 106.68	**4.650** 118.11	**2.325** 59.06	**1.950** 49.53	**1.800** 45.72	534179-4
152	**4.750** 120.65	**1.062** 26.98	**4.000** 101.60	**4.450** 113.03	**2.225** 56.52	**1.850** 46.99	**1.700** 43.18	534179-3
140	**4.450** 113.03	**1.037** 26.34	**3.700** 93.98	**4.150** 105.41	**2.075** 52.71	**1.700** 43.18	**1.550** 39.37	534179-2
132	**4.250** 107.95	**.987** 25.07	**3.500** 88.90	**3.950** 100.33	**1.975** 50.17	**1.600** 40.64	**1.450** 36.83	534179-1

Dimensions are shown for reference purposes only. Specifications subject to change.

Dimensions are in millimeters unless otherwise specified.

USA: +1 800 522 6752
Asia Pacific: +86 0 400 820 6015
UK: +44 800 267 666

For additional support numbers please visit www.te.com

Extended Mini-Box Pin Header Assemblies

Style I

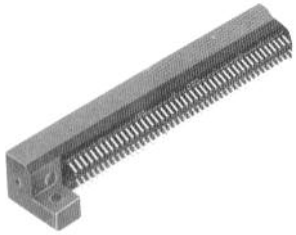

Housing Material — Liquid crystal polymer

Contact Material and Finish — Brass per QQ-B-626 plated .000050 [0.00127] min. gold in the contact area, .000100 [0.00254] min. tin-lead on the tails over .000050 [0.00127] min. nickel on the entire contact

Related Product Data

Mates with — Receptacle, page 1-23

External Keying— page 1-30

Recommended PC Board Layout — page 1-29

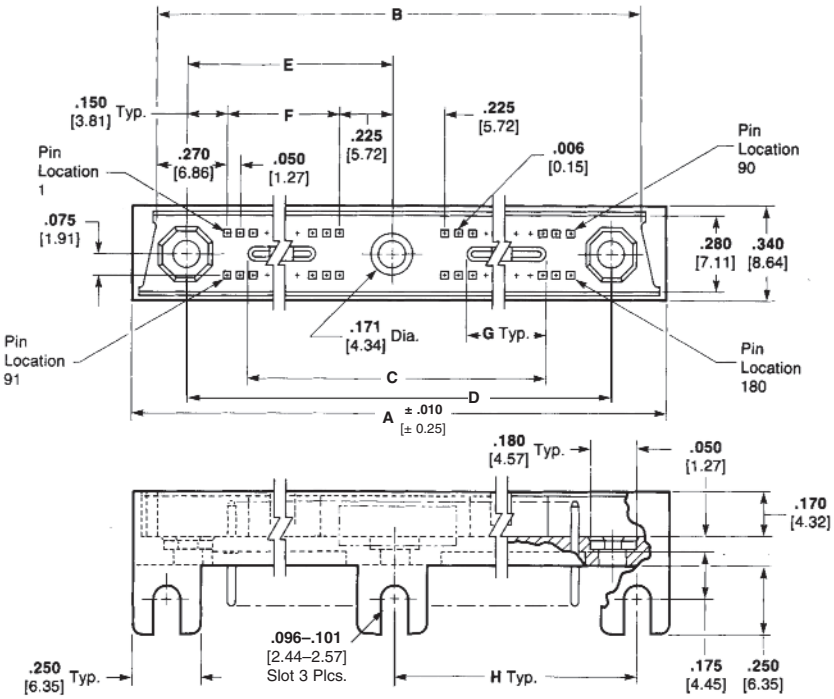

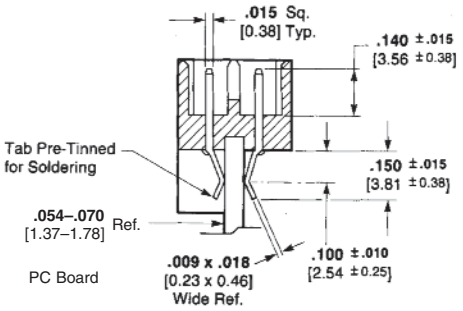

No. of Pos.	Dimensions								Assembly Part No.
	A	B	C	D	E	F	G	H	
200	**6.050** 153.67	**5.890** 149.61	**5.190** 131.83	**5.650** 143.51	**2.825** 71.76	**2.450** 62.23	**2.290** 58.17	**2.900** 73.66	534180-8
192	**5.850** 148.6	**5.690** 144.53	**4.990** 126.75	**5.450** 138.43	**2.725** 69.22	**2.350** 59.69	**2.190** 55.63	**2.800** 71.12	534180-7
180	**5.550** 140.97	**5.390** 136.91	**4.690** 119.13	**5.150** 130.81	**2.575** 65.41	**2.200** 55.88	**2.040** 51.82	**2.650** 67.31	534180-6
172	**5.350** 135.89	**5.190** 131.83	**4.490** 114.00	**4.950** 125.73	**2.475** 62.87	**2.100** 53.34	**1.940** 49.28	**2.550** 64.77	534180-5
160	**5.050** 128.27	**4.890** 124.21	**4.190** 106.43	**4.650** 118.11	**2.325** 59.06	**1.950** 49.53	**1.790** 45.47	**2.400** 60.96	534180-4
152	**4.850** 123.19	**4.690** 119.13	**3.990** 101.35	**4.450** 113.03	**2.225** 56.52	**1.850** 46.99	**1.690** 42.93	**2.300** 58.42	534180-3
140	**4.550** 115.57	**4.390** 111.51	**3.690** 93.73	**4.150** 105.41	**2.075** 52.71	**1.700** 43.18	**1.540** 38.12	**2.150** 54.60	534180-2
132	**4.350** 110.49	**4.190** 106.43	**3.490** 88.65	**3.950** 100.33	**1.975** 50.17	**1.600** 40.64	**1.440** 36.58	**2.050** 52.07	534180-1

Dimensions are shown for reference purposes only. Specifications subject to change.

Dimensions are in millimeters unless otherwise specified.

USA: +1 800 522 6752
Asia Pacific: +86 0 400 820 6015
UK: +44 800 267 666

For additional support numbers please visit www.te.com

Extended Mini-Box Right-Angle Pin Header Assemblies

Style II

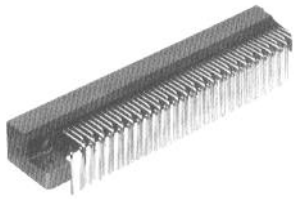

Housing Material — Liquid crystal polymer

Contact Material and Finish — Brass per QQ-B-626 plated .000050 [0.00127] min. gold in the contact area, .000100 [0.00254] min. tin-lead on the tail over .000050 [0.00127] min. nickel on the entire contact

Related Product Data

Mates with — Receptacle assemblies, page 1-22

External Keying — page 1-30

Recommended PC Board Layout — page 1-26

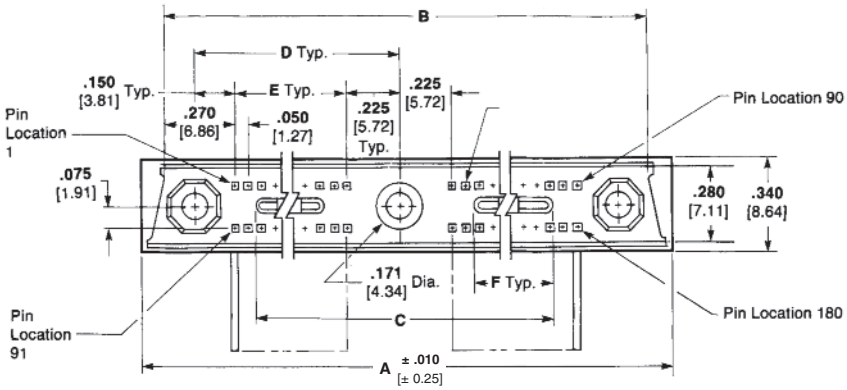

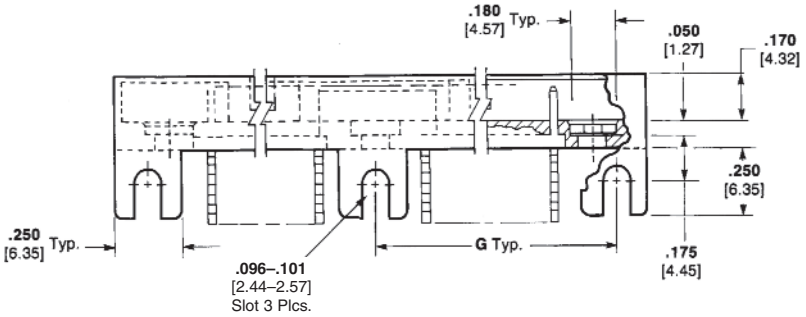

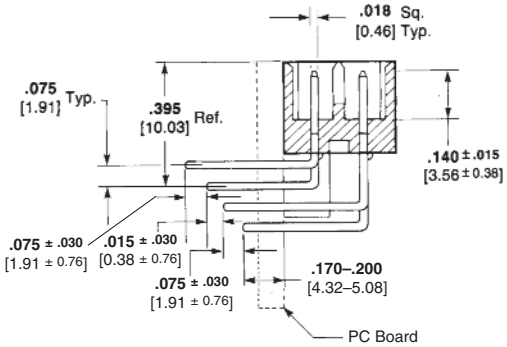

No. of Pos.	Dimensions							Assembly Part No.
	A	B	C	D	E	F	G	
200	**6.050** 153.67	**5.890** 149.61	**5.190** 131.83	**2.825** 71.76	**2.450** 62.23	**2.290** 58.17	**2.900** 73.66	534688-8
192	**5.850** 148.60	**5.690** 144.53	**4.990** 126.75	**2.725** 69.22	**2.350** 59.69	**2.190** 55.63	**2.800** 71.12	534688-7
180	**5.550** 140.97	**5.390** 136.91	**4.690** 119.13	**2.575** 65.41	**2.200** 55.88	**2.040** 51.82	**2.650** 67.31	534688-1
172	**5.350** 135.89	**5.190** 131.83	**4.490** 114.00	**2.475** 62.87	**2.100** 53.34	**1.940** 49.28	**2.550** 64.77	534688-6
160	**5.050** 128.27	**4.890** 124.21	**4.190** 106.43	**2.325** 59.06	**1.950** 49.53	**1.790** 45.47	**2.400** 60.96	534688-5
152	**4.850** 123.19	**4.690** 119.13	**3.990** 101.35	**2.225** 56.52	**1.850** 46.99	**1.690** 42.93	**2.300** 58.42	534688-4
140	**4.550** 115.57	**4.390** 111.51	**3.690** 93.73	**2.075** 52.71	**1.700** 43.18	**1.540** 38.12	**2.150** 54.60	534688-3
132	**4.350** 110.49	**4.190** 106.43	**3.490** 88.65	**1.975** 50.17	**1.600** 40.64	**1.440** 36.58	**2.050** 52.07	534688-2

Dimensions are shown for reference purposes only. Specifications subject to change.

Dimensions are in millimeters unless otherwise specified.

USA: +1 800 522 6752
Asia Pacific: +86 0 400 820 6015
UK: +44 800 267 666

For additional support numbers please visit www.te.com

Mini-Box Receptacle Assemblies with 4 or 6 Hybrid Cavities

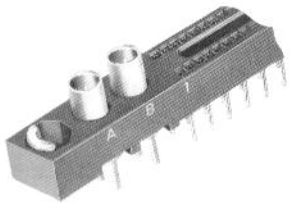

Housing Material — In accordance with MIL-C-55302

Contact Material and Finish — Beryllium copper per QQ-C-533 or ASTM B768, or phosphor bronze per ASTM B103 plated .000030 [0.00076] min. gold in the contact area, .000100 [0.00254] min. tin-lead in the termination area over .000030 [0.00076] min. nickel on the entire contact

Related Product Data

Mates with — Pin headers, page 1-26

External Keying — page 1-30

Other sizes and configurations available. Consult TE Connectivity.

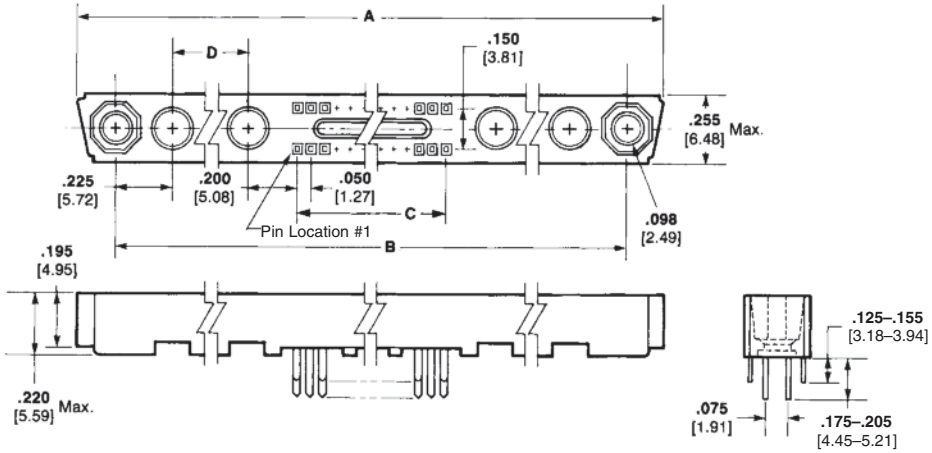

No. of Box Contact Pos.	No. of Coaxial Cavities	Dimensions				Assembly Part No.
		A	B	C	D	
90	4	**3.740** 95.00	**3.450** 87.63	**2.200** 55.88	**.200** 5.08	532797-1
74	6	**3.740** 95.00	**3.450** 87.63	**1.800** 45.72	**.400** 10.16	531820-1
36	6	**2.790** 70.87	**2.500** 63.5	**.850** 21.59	**.400** 10.16	531820-3
26	6	**2.540** 65.52	**2.250** 57.15	**.600** 15.24	**.400** 10.16	531820-2

Note: These receptacle assemblies accept coaxial contact—Vertical PC Board Mount Socket 227603-1

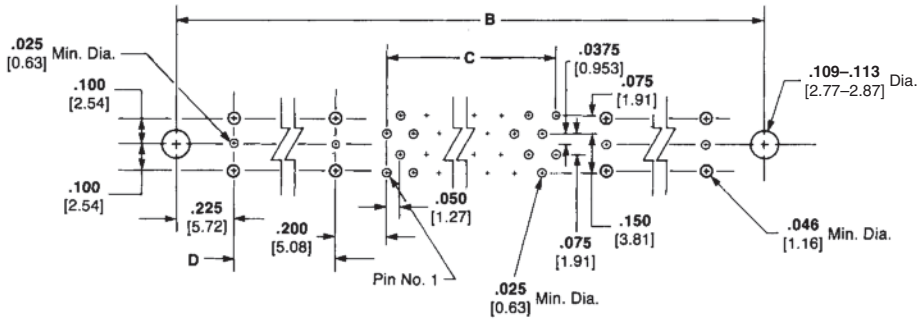

Recommended PC Board Layout

Dimensions are shown for reference purposes only. Specifications subject to change.

Dimensions are in millimeters unless otherwise specified.

USA: +1 800 522 6752
Asia Pacific: +86 0 400 820 6015
UK: +44 800 267 666

For additional support numbers please visit www.te.com

Mini-Box Right-Angle Pin Header Assemblies with 4 or 6 Hybrid Cavities

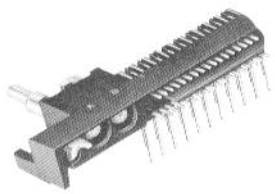

Housing Material — In accordance with MIL-C-55302

Contact Material and Finish — Brass per QQ-B-626 plated .000030 [0.00076] min. gold in the contact area, .000100 [0.00254] min. tin-lead on the post over .000030 [0.00076] min. nickel on the entire contact

Related Product Data

Mates with — Receptacles, page 1-25

External Keying — page 1-30

Other sizes and configurations available. Consult TE Connectivity.

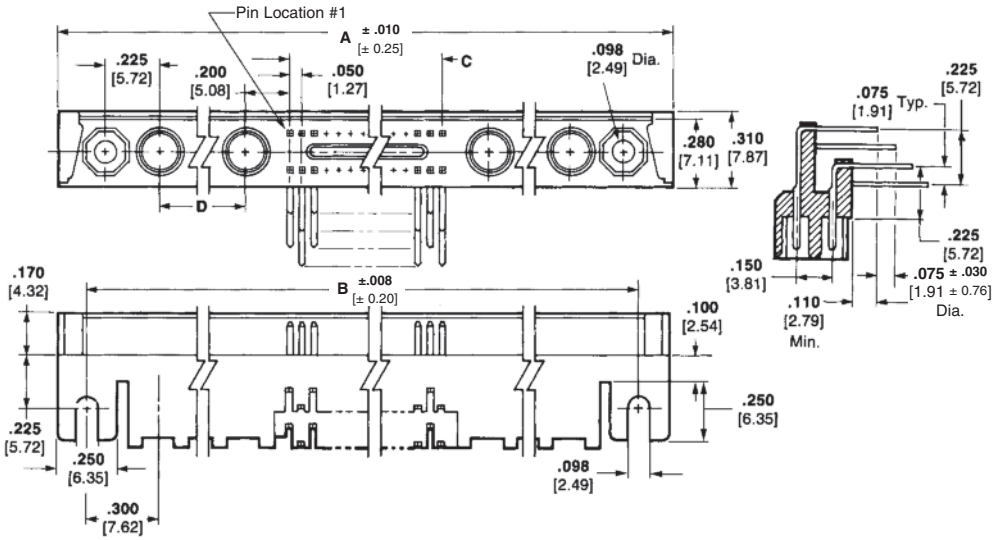

No. of Box Contact Pos.	No. of Coaxial Cavities	Dimensions				Assembly Part No.
		A	B	C	D	
90	4	**3.850** 97.79	**3.600** 91.44	**2.200** 55.88	**.200** 5.08	532796-1
74	6	**3.850** 97.79	**3.600** 91.44	**1.800** 45.72	**.400** 10.16	531819-1
36	6	**2.900** 73.66	**2.650** 67.31	**.850** 21.59	**.400** 10.16	531819-3
26	6	**2.650** 67.31	**2.400** 60.96	**.600** 15.24	**.400** 10.16	531819-2

Note: These pin header assemblies accept coaxial contacts—Vertical Cable Pin 227604-1 and Right-Angle PC Board Mount Pin 227602-1.

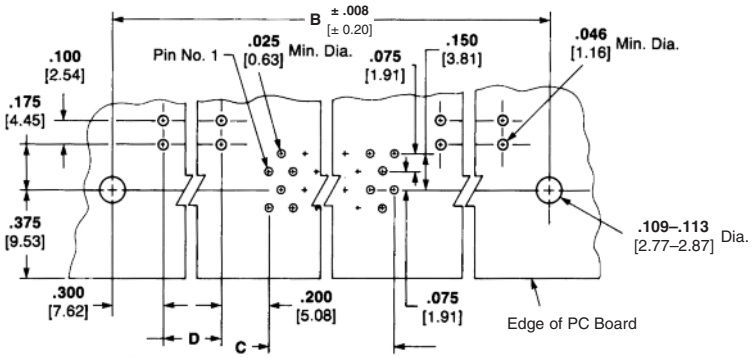

Recommended PC Board Layout

Dimensions are shown for reference purposes only. Specifications subject to change.

Dimensions are in millimeters unless otherwise specified.

USA: +1 800 522 6752
Asia Pacific: +86 0 400 820 6015
UK: +44 800 267 666

For additional support numbers please visit www.te.com

Microminiature COAXICON Contacts for Hybrid Cavities

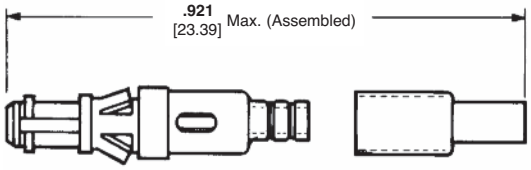

Cable Pin

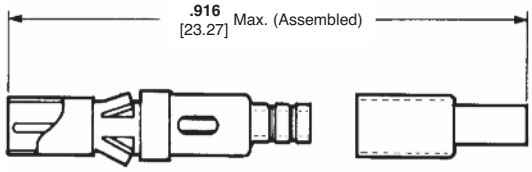

Cable Socket

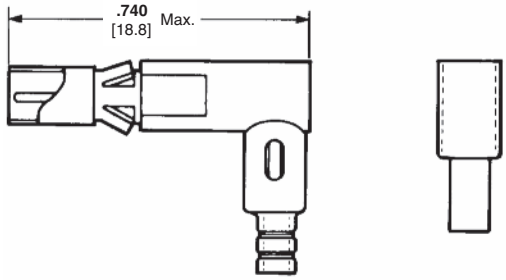

Right-Angle Cable Socket

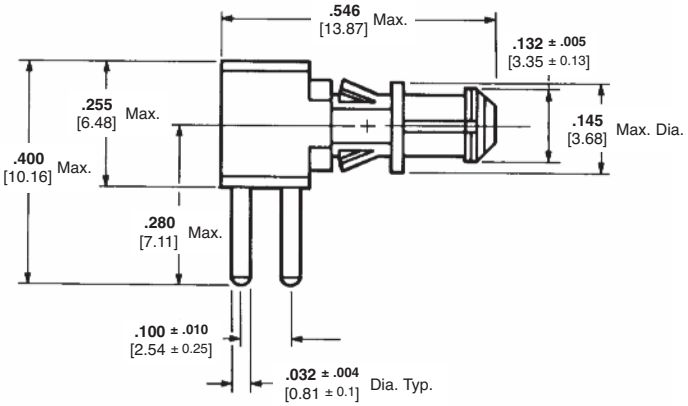

Right-Angle Pin
for PC Board Application
Part Number 227602-1
Plated .000030 [0.00076] gold

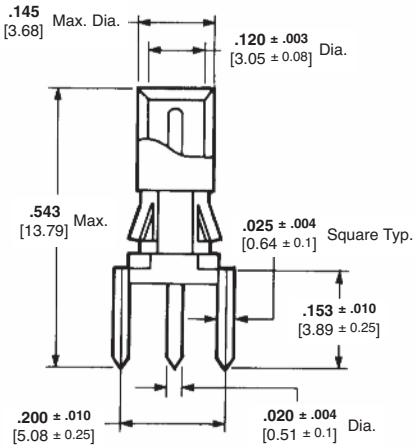

Vertical Socket
for PC Board Application
Part Number 227603-1

Cable Size	Contact Style	Part No.	Application Tool Part No.
RG 178/U Double Braid RG 196/U	Cable Pin	227604-1	220215-1
	Cable Socket	227605-1	
	Right-Angle Cable Socket	227606-1	

Extraction Tool Part Number 220216-1

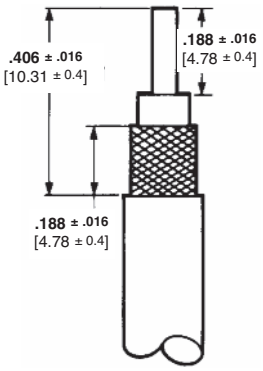

Recommended Strip Length

Notes:
1. Center contacts are plated with .000030 [0.00076] gold.
2. For .125 [3.18] maximum thick pc boards.

Electrical Characteristics

Nominal Impedance — 50 ohms

Frequency Range — 0-2 GHz

Maximum Operating Voltage (Sea Level) — 150 VAC RMS

Mechanical Characteristics

Operating Temperature Range — -67°C to +257°F [-55°C to +125°C]

Cable Retention — 15 lb. [66.7N] min. (RG 178 type double braid)

Contact Materials

Stainless Steel — QQ-S-766

Gold Plate — MIL-G-45204

Nickel Plate — QQ-N-290

Beryllium Copper — QQ-C-530

PTFE — MIL-P-19468A

Brass — QQ-B-626

Ferrule Material

Brass — MIL-C-50, tin plate per MIL-T-10727

Dimensions are shown for reference purposes only. Specifications subject to change.

Dimensions are in millimeters unless otherwise specified.

USA: +1 800 522 6752
Asia Pacific: +86 0 400 820 6015
UK: +44 800 267 666

For additional support numbers please visit www.te.com

Mini-Box Connectors Recommended Printed Circuit Board Layouts

Receptacle Assemblies

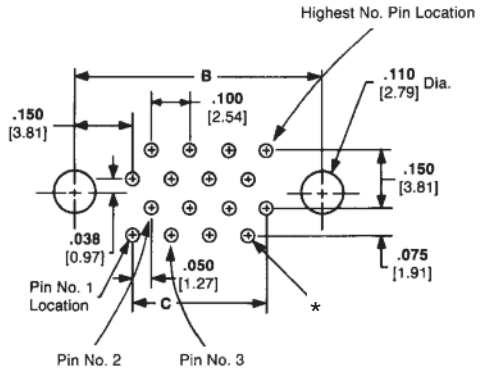

(Connector Side)

Pin Header Assemblies

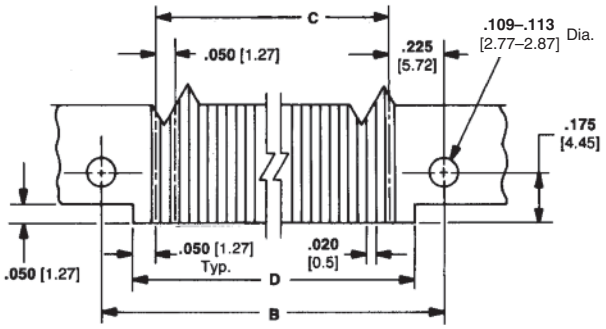

Style I & II

*Holes for solder type receptacle connectors should be .025 to .032 [0.64 to 0.81] dia. Holes for compliant tails should be manufactured as follows: .0320$^{\pm.0010}$ [0.813$^{\pm0.025}$] drilled hole dia. (no. 67 drill), .0003 [0.008] min. tin-lead plating over .001 to .002 [0.025 to 0.051] thick copper on wall. Finished hole diameter to be .026 to .030 [0.66 to 0.76] after plating, .025 to .030 [0.64 to 0.76] after reflow.

Straddle Mount Receptacle Assemblies

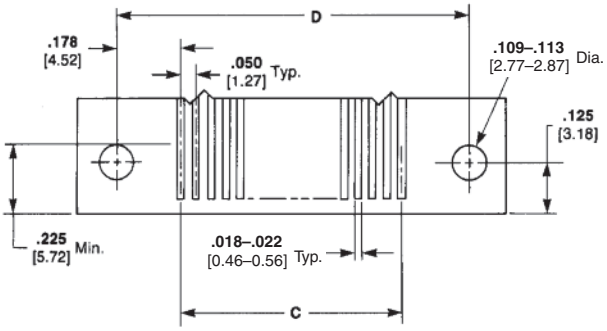

Right-Angle Pin Header Assemblies

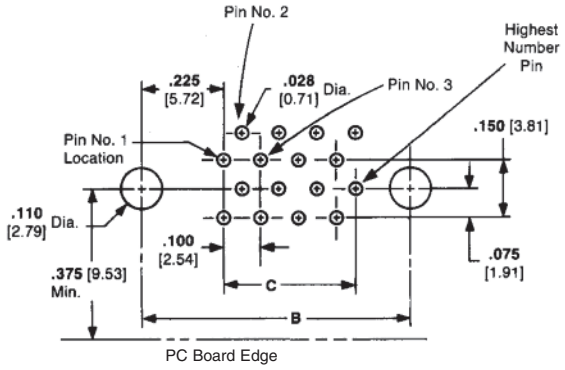

Style III
(Connector Side)

No. of Pos.	Dimensions		
	B	C	D
128	**3.450** 87.63	**3.150** 80.01	**3.505** 89.03
110	**3.000** 76.2	**2.700** 68.58	**3.055** 77.60
100	**2.750** 69.85	**2.450** 62.23	**2.805** 71.25
90	**2.500** 63.5	**2.200** 55.88	**2.555** 64.90
80	**2.250** 57.15	**1.950** 49.53	**2.305** 58.55
70	**2.000** 50.8	**1.700** 43.18	**2.055** 52.20
60	**1.750** 44.45	**1.450** 36.83	**1.805** 45.85
50	**1.500** 38.1	**1.200** 30.48	**1.555** 39.50
40	**1.250** 31.75	**.950** 24.13	**1.305** 33.15
30	**1.000** 25.4	**.700** 17.78	**1.055** 26.80
20	**.750** 19.05	**.450** 11.43	**.805** 20.45

No. of Pos.	Dimensions		
	B	C	D
128	**3.600** 91.44	**3.150** 80.01	**3.250** 82.55
110	**3.150** 80.01	**2.700** 68.58	**2.800** 71.12
100	**2.900** 73.66	**2.450** 62.23	**2.550** 64.77
90	**2.650** 67.31	**2.200** 55.88	**2.300** 58.42
80	**2.400** 60.96	**1.950** 49.53	**2.050** 52.07
70	**2.150** 54.61	**1.700** 43.18	**1.800** 45.72
60	**1.900** 48.26	**1.450** 36.83	**1.550** 39.37
50	**1.650** 41.91	**1.200** 30.48	**1.300** 33.02
40	**1.400** 35.56	**.950** 24.13	**1.050** 26.67
30	**1.150** 29.21	**.700** 17.78	**.800** 20.32
20	**.900** 22.86	**.450** 11.43	**.550** 13.97

Dimensions are shown for reference purposes only. Specifications subject to change.

Dimensions are in millimeters unless otherwise specified.

USA: +1 800 522 6752
Asia Pacific: +86 0 400 820 6015
UK: +44 800 267 666

For additional support numbers please visit www.te.com

Mini-Box Connectors Recommended Printed Circuit Board Layouts (Continued)

Vertical Surface Mount Receptacle and Pin Header Assemblies

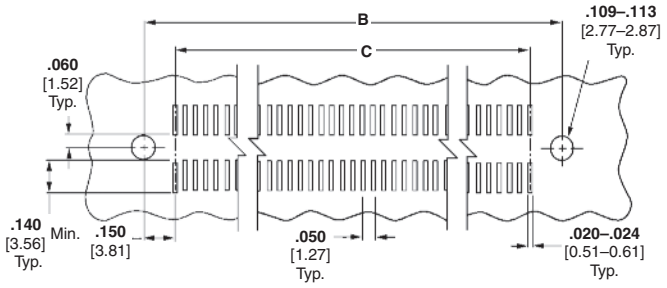

Extended Mini-Box Connectors Recommended Printed Circuit Board Layouts (Connector Side of Board)

Receptacle Assemblies

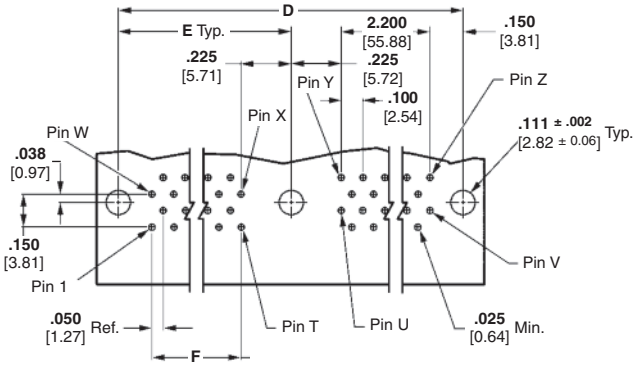

PC Layout I

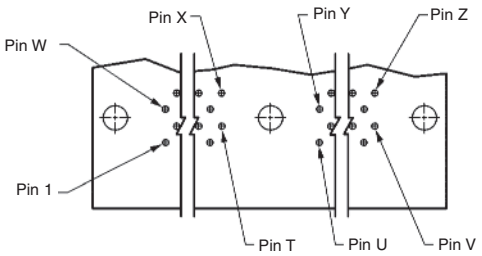

PC Layout II

Pin Header Assemblies

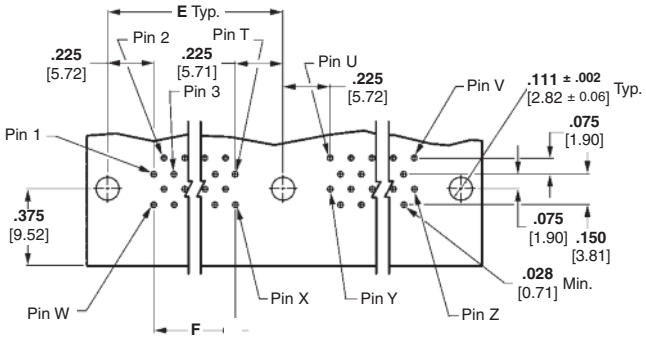

Right-Angle—PC Layout I

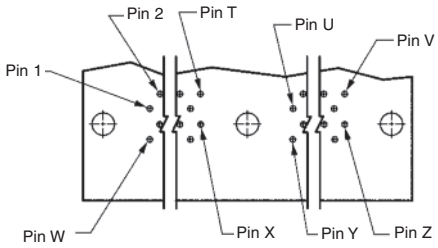

Right-Angle—PC Layout II

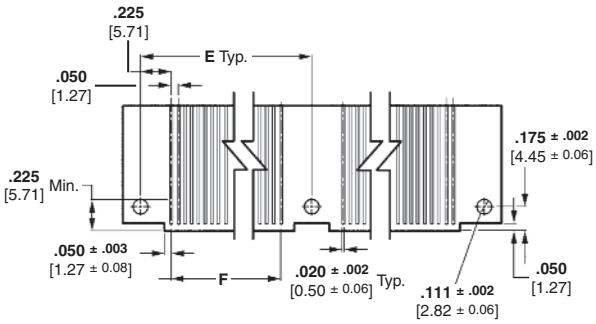

Straddle Mount

Catalog 1308940
Revised 9-14

www.te.com

Dimensions are shown for reference purposes only. Specifications subject to change.

Dimensions are in millimeters unless otherwise specified.

USA: +1 800 522 6752
Asia Pacific: +86 0 400 820 6015
UK: +44 800 267 666

For additional support numbers please visit www.te.com

Extended Mini-Box Connectors Recommended Printed Circuit Board Layouts (Connector Side of Board) (Continued)

Receptacles

PC Layout	Pin Locations						
	T	U	V	W	X	Y	Z
II	50	51	100	101	150	151	200
II	48	49	96	97	144	145	192
I	45	46	90	91	135	136	180
I	43	44	86	87	129	130	172
II	40	41	80	81	120	121	160
II	38	39	76	77	114	115	152
I	35	36	70	71	105	106	140
I	33	34	66	67	99	100	132

No. of Pos.	Dimensions		
	D	E	F
200	**5.650** 143.51	**2.825** 71.76	**2.450** 62.23
192	**5.450** 138.43	**2.725** 69.22	**2.350** 59.69
180	**5.150** 130.81	**2.575** 65.41	**2.200** 55.88
172	**4.950** 125.73	**2.475** 62.87	**2.100** 53.34
160	**4.650** 118.11	**2.325** 59.06	**1.950** 49.53
152	**4.450** 113.03	**2.225** 56.52	**1.850** 46.99
140	**4.150** 105.41	**2.075** 52.71	**1.700** 43.18
132	**3.950** 100.33	**1.975** 50.17	**1.600** 40.64

Pin Headers

PC Layout	Pin Locations						
	T	U	V	W	X	Y	Z
II	50	51	100	101	150	151	200
II	48	49	96	97	144	145	192
I	45	46	90	91	135	136	180
I	43	44	86	87	129	130	172
II	40	41	80	81	120	121	160
II	38	39	76	77	114	115	152
I	35	36	70	71	105	106	140
I	33	34	66	67	99	100	132

No. of Pos.	Dimensions	
	F	E
200	**2.450** 62.23	**2.900** 73.66
192	**2.350** 59.69	**2.800** 71.12
180	**2.200** 55.88	**2.650** 67.31
172	**2.100** 53.34	**2.550** 64.77
160	**1.950** 49.53	**2.400** 60.96
152	**1.850** 46.99	**2.300** 60.96
140	**1.700** 43.18	**2.150** 54.61
132	**1.600** 40.64	**2.050** 52.07

Mini-Box and Extended Mini-Box Connector Keying Hardware

External Keys

These external keys can be used with all the receptacle assemblies and with all the pin header assemblies. They are press fitted into position using tool number 91117-2. Keys used in one end of each mated pair will yield 8 keying combinations, and when used in both ends of the mated pairs will yield 64 keying combinations. The No. 2-56 screws are used to mount keyed receptacles to a printed circuit board. See instruction sheet 408-7894 for details. Rivets can be used to retain keys in pin header assemblies. See instruction sheet 408-9240.

Pin Headers

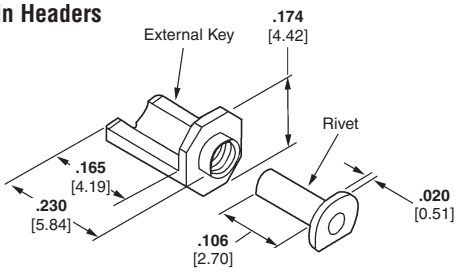

External Key Kit Number 530721-4
Kit includes 2 each of the following:
Keys — Part Number 530721-1
Military Part Number M55302/31-06
Rivets — Part Number 534164-2
Material — Passivated Stainless Steel

Receptacles

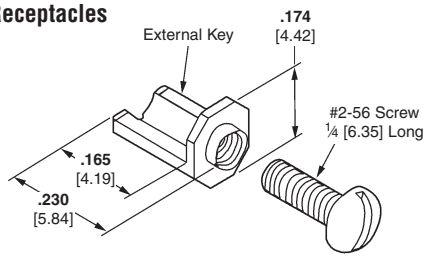

External Key Kit Number 530721-3
Kit includes 2 each of the following:
Keys — Part Number 530721-1
Military Part Number M55302/31-06
#2-56 Screws, **.250** [6.35] Long
Material — Passivated Stainless Steel

Dimensions are shown for reference purposes only. Specifications subject to change.

Dimensions are in millimeters unless otherwise specified.

USA: +1 800 522 6752
Asia Pacific: +86 0 400 820 6015
UK: +44 800 267 666

For additional support numbers please visit www.te.com

4-Row Mini-Box Connectors

Receptacle Assemblies, Vertical

Material and Finish

Housing — In accordance with MIL-M-24519 per MIL-C-55302. GLCP-30F, liquid crystal polymer, grey

Contacts — Beryllium copper per QQ-C-533 or ASTM B760, or phosphor bronze per ASTM B103 plated .000050 [0.00127] min. gold in the mating area, .000100 [0.00254] min. tin-lead in the terminating area, over .000030 [0.00076] min. nickel on the entire contact

Related Product Data

Mates with — Pin headers, page 1-32

External Keying — page 1-30

Technical Documents

Product Specifications — 108-1551

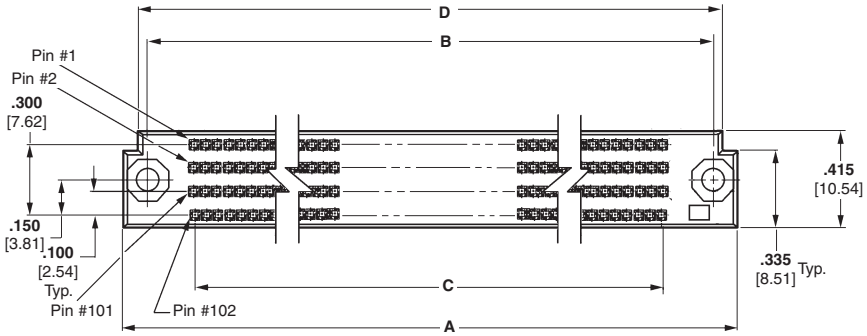

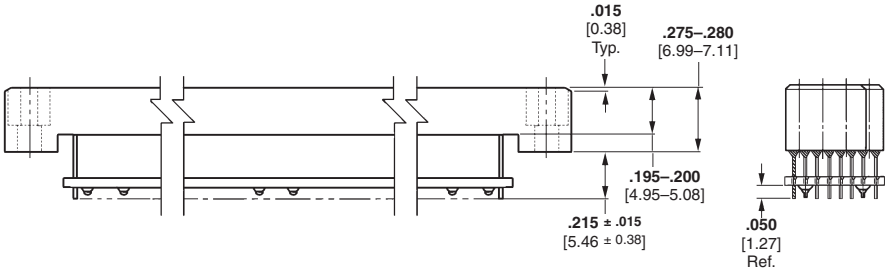

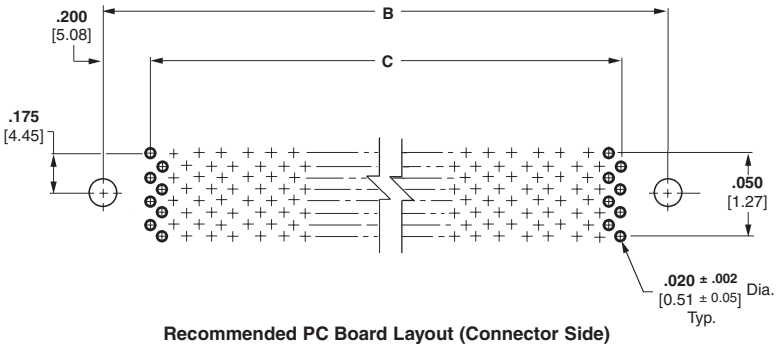

Recommended PC Board Layout (Connector Side)

No. of Pos.	Dimensions A	Dimensions B	Dimensions C	Dimensions D	Connector w/ Hardware*	Part No.
120	**2.095** 53.21	**1.850** 46.99	**1.450** 36.83	**1.950** 49.53	—	448445-1
152	**2.495** 63.37	**2.250** 57.15	**1.850** 46.99	**2.350** 59.69	449650-2	448445-4
200	**3.095** 78.61	**2.850** 72.39	**2.450** 62.23	**2.950** 74.93	—	448445-2
300	**4.345** 110.36	**4.100** 104.14	**3.700** 93.98	**4.200** 106.68	449650-1	448445-5
320	**4.595** 116.71	**4.350** 110.49	**3.950** 100.33	**4.450** 113.03	—	448445-3

* Hardware includes 2 each 531721-3 External Key Kit (See page 1-27)

Dimensions are shown for reference purposes only. Specifications subject to change.

Dimensions are in millimeters unless otherwise specified.

USA: +1 800 522 6752
Asia Pacific: +86 0 400 820 6015
UK: +44 800 267 666

For additional support numbers please visit www.te.com

4-Row Mini-Box Connectors (Continued)

Pin Headers, with Flexible Circuit Terminations

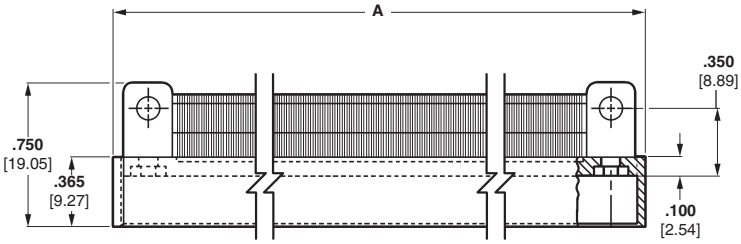

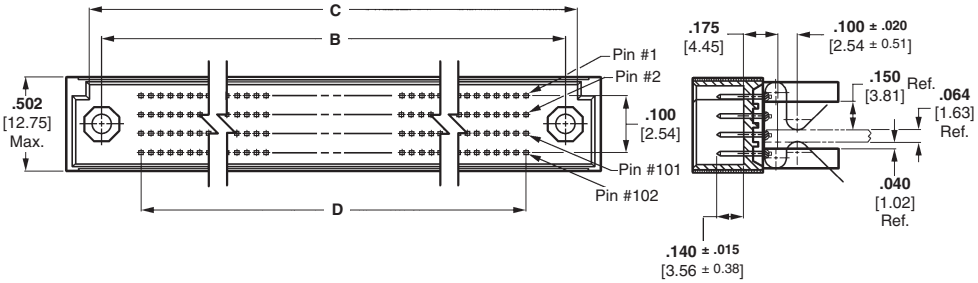

Material and Finish

Housing — In accordance with MIL-M-24519 per MIL-C-55302. GLCP-30F, liquid crystal polymer, grey

Contacts — Brass per ASTM B36 plated .000050 [0.00127] min. gold in the mating area, .000100 [0.00254] min. tin-lead in the terminating area, over .000030 [0.00076] min. nickel on the entire contact with flexible circuits, 3.5 oz [99.23 g] beryllium copper per QQ-C-530 conductors with polymide dielectric and acrylic adhesive

Related Product Data

Mates with — Receptacle assemblies, page 1-31

External Keying — page 1-30

Technical Documents

Product Specifications — 108-1551

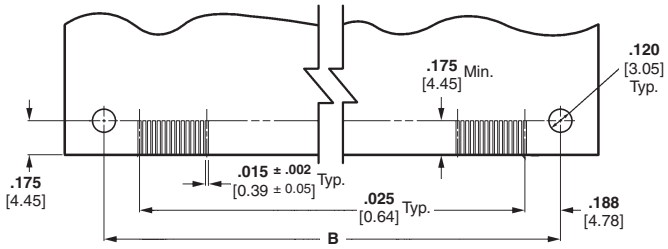

Recommended PC Board Layout

No. of Pos.	Dimensions A	Dimensions B	Dimensions C	Dimensions D	Connector w/ Hardware*	Part No.
120	**2.210** 56.13	**1.850** 46.99	**1.975** 50.17	**1.450** 36.83	—	448446-1
152	**2.610** 63.37	**2.250** 57.15	**2.375** 46.99	**1.850** 59.69	449619-2	448446-4
200	**3.210** 78.61	**2.850** 72.39	**2.975** 62.23	**2.450** 74.93	—	448446-2
300	**4.460** 110.36	**4.100** 104.14	**4.225** 93.98	**3.700** 106.68	449619-1	448446-5
320	**4.710** 116.71	**4.350** 110.49	**4.475** 100.33	**3.950** 113.03	—	448446-3

* Connector includes 2 each of 449601-1 Hardware Kit. Hardware Kit can also be purchased separately. Hardware Kit includes: external key, screw, spacers, e-ring and threaded spacer.

Dimensions are shown for reference purposes only. Specifications subject to change.

Dimensions are in millimeters unless otherwise specified.

USA: +1 800 522 6752
Asia Pacific: +86 0 400 820 6015
UK: +44 800 267 666

For additional support numbers please visit www.te.com

Introduction

Product Facts

- **Two-piece high density, high performance connectors for printed circuit board use**
- **Four-beam box-type contact design provides four areas of contact per connection**
- **Available in 6-Row 306 position and 8-Row 428 position**
- **Receptacles designed for through-hole soldering**
- **Pins designed for surface mount card edge applications**
- **Guide posts provide proper alignment during mating**
- **Octagonal shape keys ensure proper mating**
- **Meets DSCC 89065 performance requirements**

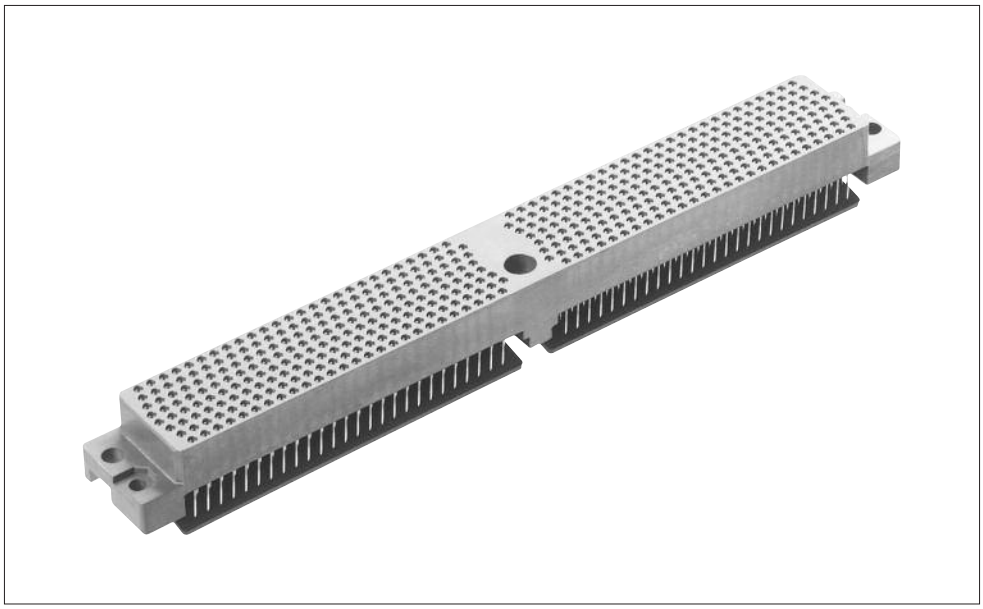

AMP-HDI 6 and 8 Row LRM (Line Replaceable Module) Connectors

Designed specifically to be the next generation, high density electronic packaging system, the AMP-HDI 6 Row, .075 [1.91] centerlines and 8 Row, .080 [2.03] centerlines, LRM Interconnection System meets all DSCC 89065 LRM specifications. This advanced system features high temperature plastic housings compatible with IR reflow solder techniques. Added advantage of the AMP-HDI LRM Connector System is its capability of accepting MIL SPEC fiber optic contacts per MIL-T29504/5. Six-row configurations available in 306 contact positions. Eight-row configurations feature two 214 position plug halves which mate with one 428-position receptacle. This technological leader is offered with standard tin-lead plated solder tails and for those applications where maintaining a light weight system is a factor. The 8-row configuration is made available with weight saving, flexible film tails.

Equally important are Application Costs. The AMP-HDI LRM Connector interconnection system offers advanced tooling that simplifies contact alignment to the pc board, substantially reducing overall applied labor costs.

Guide posts provide alignment for the connectors when mating. Shell accessories protect the pin assemblies from physical damage. Octagonal shape keys permit eight rotational positions assuring only the proper mating assembly can be inserted.

The connectors offer 6 row and 306 positions with 4 fiber optic ports capability or 8 rows with 428 positions.

Housings are made from Polyphenylene sulfide with duplex plated .000050 [.00127] min. gold beryllium copper contacts. The contact tails are tin-lead coated for easy soldering.

Technical Features

Available Number of Positions — 306 and 428

Center Spacing — .075 [1.91] and .080 [2.03]

Housing Material — Polyphenylene Sulfide per MIL-M-24519

Contact Material — Beryllium copper

Contact Finish — 50 µ in gold per MIL-G-45204

Contact Dimension — .008 [0.20] wide

Current Rating — 1 ampere

Termination Resistance (Max.) — 20 milliohms

Connector Mating Force — Less than 130 pounds

Performance Characteristics

Dielectric Withstanding Voltage — 600 VRMS

Insulation Resistance — 100 VDC, 1000 Megaohms

Connector Mating/Unmating — Less than 3 oz. per contact

Durability — 500 cycles

Vibration — MIL-STD-1344 per Method 2005 Condition V

Physical Shock — MIL-STD-1344 per Method 2004 Condition H (15G)

Thermal Shock — MIL-STD-1344 method 1003 cond A

Temperature Humidity — MIL-STD-1344 method 1002 Type II

Technical Documents
Instruction Sheet 408-4008

Dimensions are shown for reference purposes only. Specifications subject to change.

Dimensions are in millimeters unless otherwise specified.

USA: +1 800 522 6752
Asia Pacific: +86 0 400 820 6015
UK: +44 800 267 666

For additional support numbers please visit www.te.com

AMP-HDI 6-Row, 306-Position Connector

LRM Receptacle Connectors with Additional, 4-Position, Fiber Optic Contact Ports

Part Number 445270-1

Material and Finish:

Housing — Polyphenylene sulfide, (PPS) per MIL-M-24519

Contacts — Beryllium copper, duplex plated .000050 [0.00127] min. gold in the mating area,.000100 [0.00254] min. tin-lead in the termination area per 5N60 or 5N63

Sealant — Epoxy, all 306 positions

Insert Key — Stainless steel, passivated

Fiber Optic Seats — Fluorosilicone rubber compound, blue

Fiber Optic Clip — Beryllium copper per QQ-C-533

Interfacial Seal — Fluorosilicone rubber compound, blue

Guide Post and Ground — Stainless steel, passivated

Shell — Aluminum per ASTM B 221-alloy 6061-T6, plated chromate per MIL-C-5541, Class 3 with **Captive Screws** — MS 246903-C7 modified

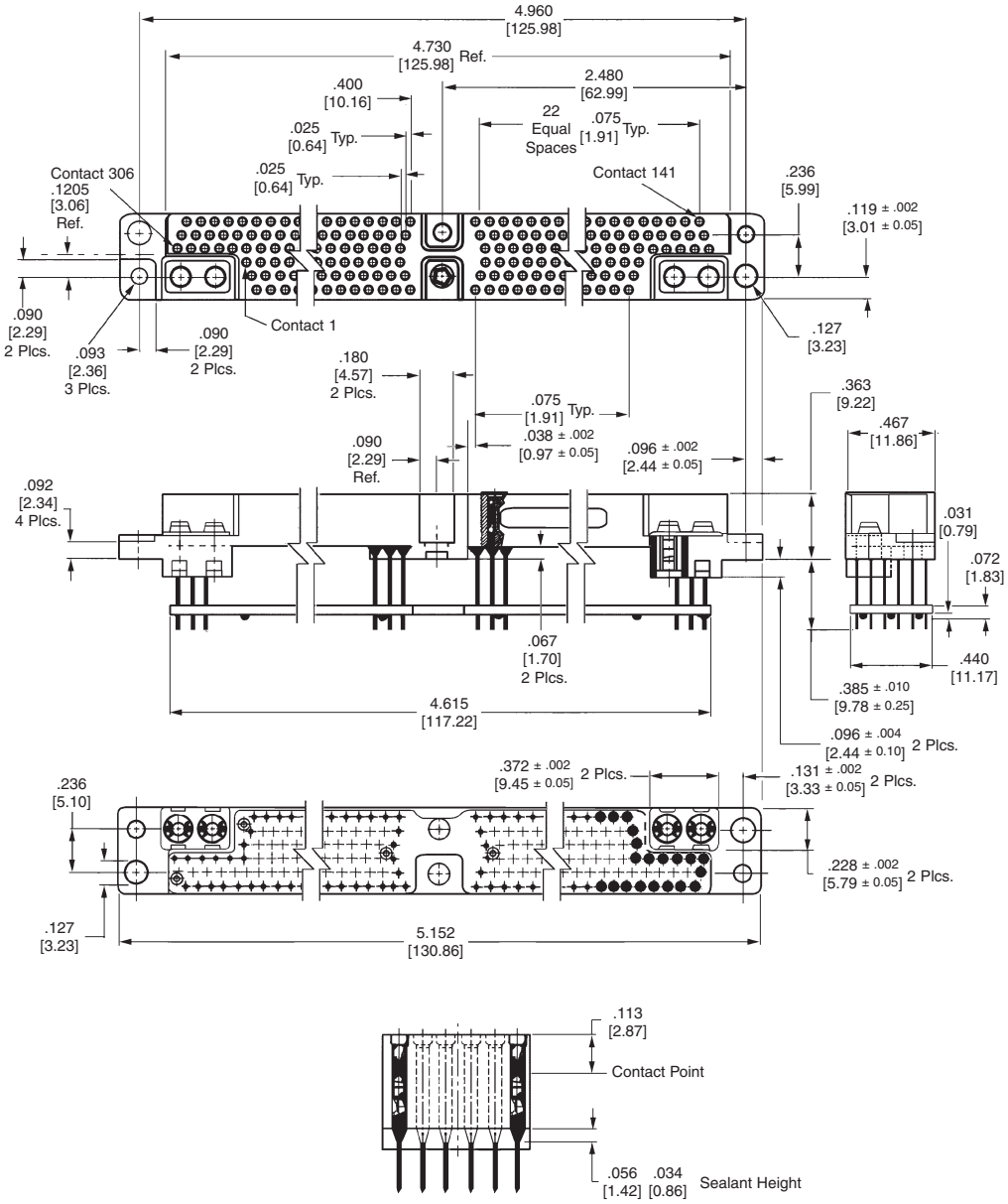

Dimensions are shown for reference purposes only. Specifications subject to change.

Dimensions are in millimeters unless otherwise specified.

USA: +1 800 522 6752
Asia Pacific: +86 0 400 820 6015
UK: +44 800 267 666

For additional support numbers please visit www.te.com

AMP-HDI 6-Row, 306-Position Connector (Continued)

LRM Receptacle Connectors with Additional, 4-Position, Fiber Optic Contact Ports
(Continued)

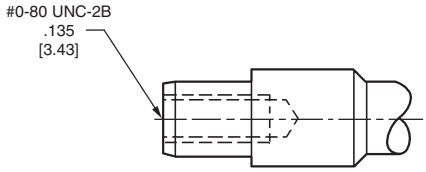

Part Number 445287-2

Part Number 445287-1

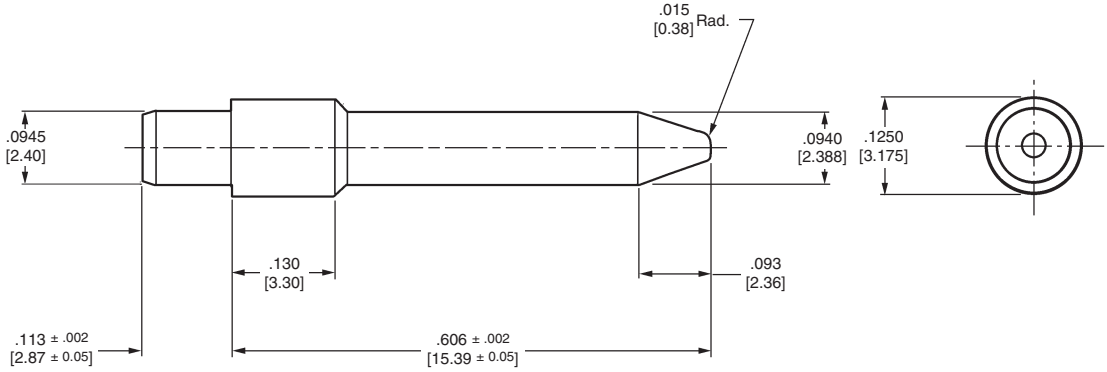

Guide Post

Left Half
Part Number 445525-1

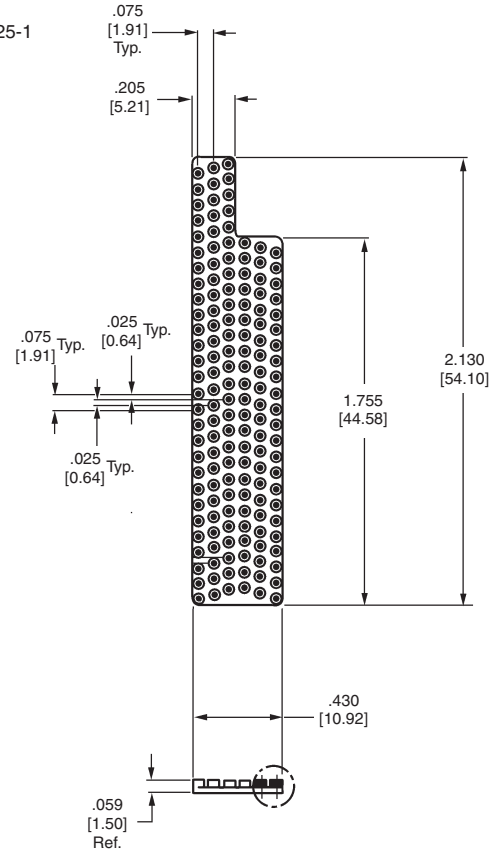

Right Half
Part Number 445274-1

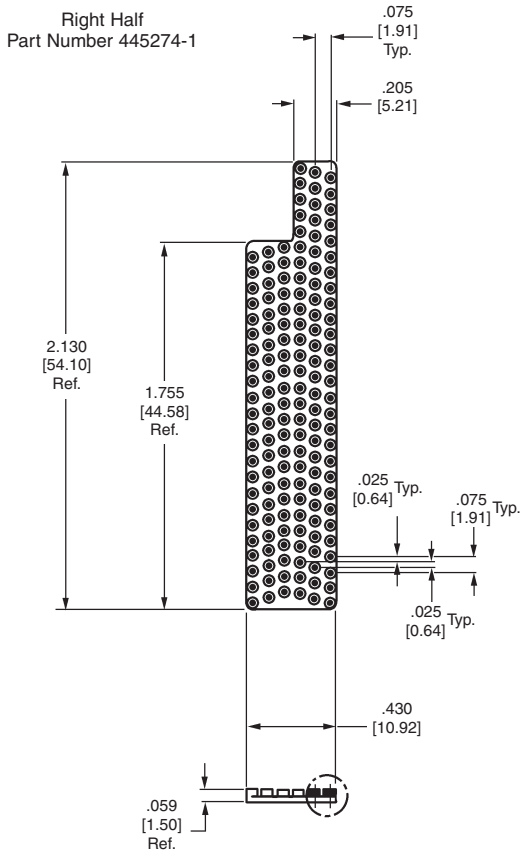

Interfacial Sealing Gaskets

Dimensions are shown for reference purposes only. Specifications subject to change.

Dimensions are in millimeters unless otherwise specified.

USA: +1 800 522 6752
Asia Pacific: +86 0 400 820 6015
UK: +44 800 267 666

For additional support numbers please visit www.te.com

AMP-HDI 6-Row, 306-Position Connector (Continued)

LRM Plug Assembly with Additional, 4-Position, Fiber Optic Contacts

Part Number 445269-1

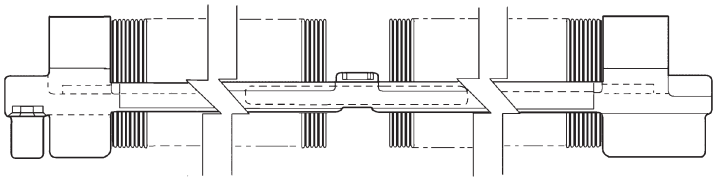

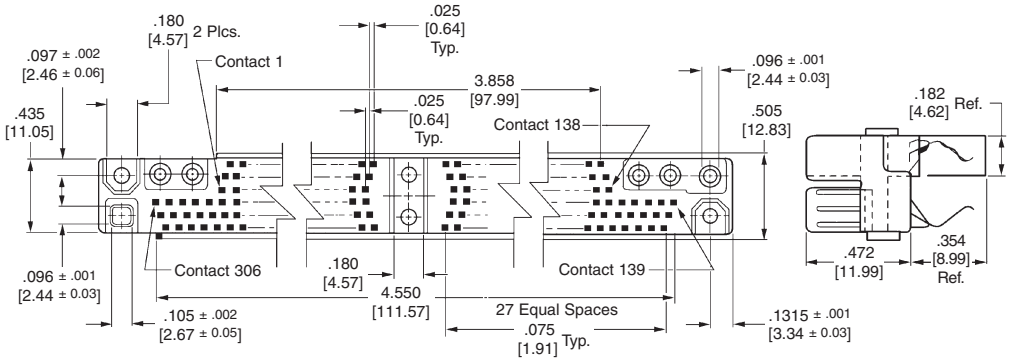

Material and Finish

Housing — Polyphenylene sulfide (PPS) per MIL-M-24519

Contacts — Beryllium copper, duplex .000050 [0.00127] min. gold in the mating area, .000100 [0.00254] min. tin-lead in the termination area per 5N60 or 5N63

Fiber Optic Contacts — Per MIL-T-29504/5 (are customer supplied)

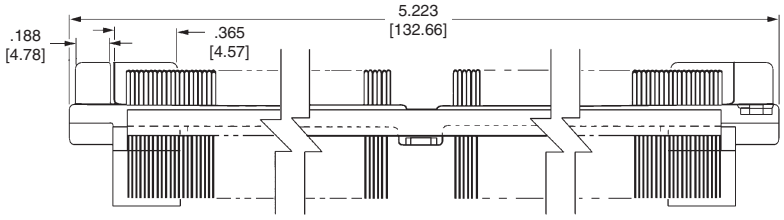

Dimensions are shown for reference purposes only. Specifications subject to change.

Dimensions are in millimeters unless otherwise specified.

USA: +1 800 522 6752
Asia Pacific: +86 0 400 820 6015
UK: +44 800 267 666

For additional support numbers please visit www.te.com

AMP-HDI 8-Row, 428-Position Connector

LRM Motherboard Connector

Part Number 447447-1

Material and Finish

Housing — Polyphenylene sulfide per MIL-M-24519

Contacts — Beryllium copper, plated .000050 [0.00127] min. gold per MIL-G-45204 in the contact area, over .000050 [0.00127] min. on the entire contact per QQ-N-290

Related Product Data

Mates with — Pin headers, page 1-38

Available Hardware — External Keys, Guide Pins

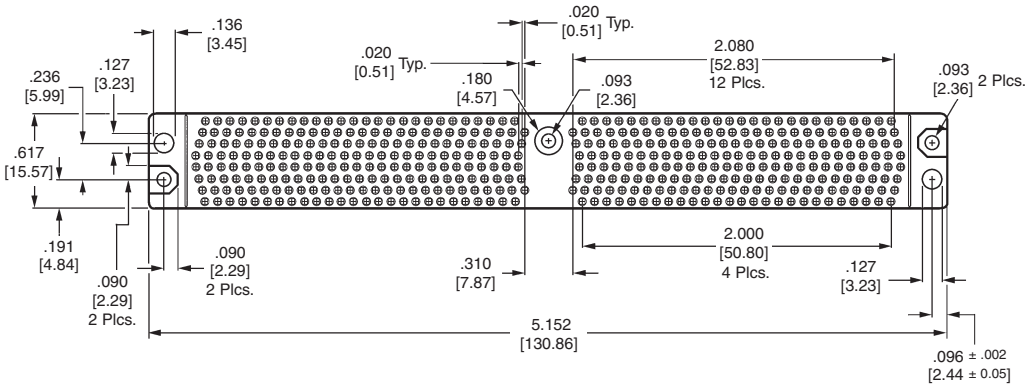

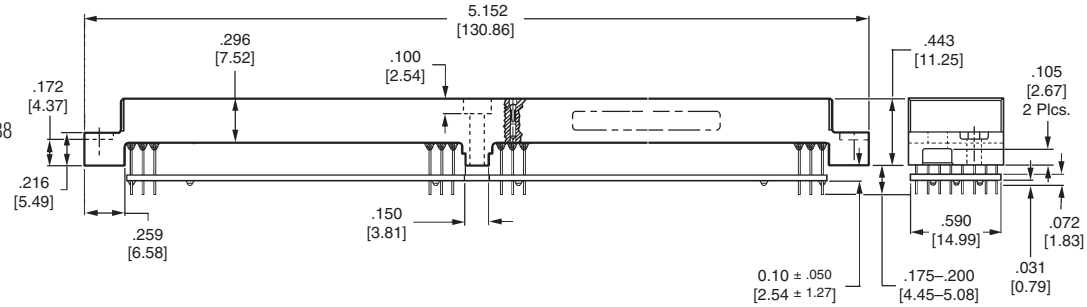

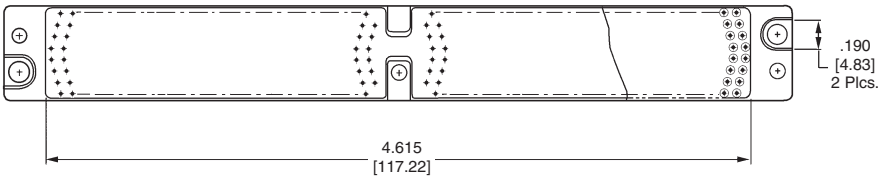

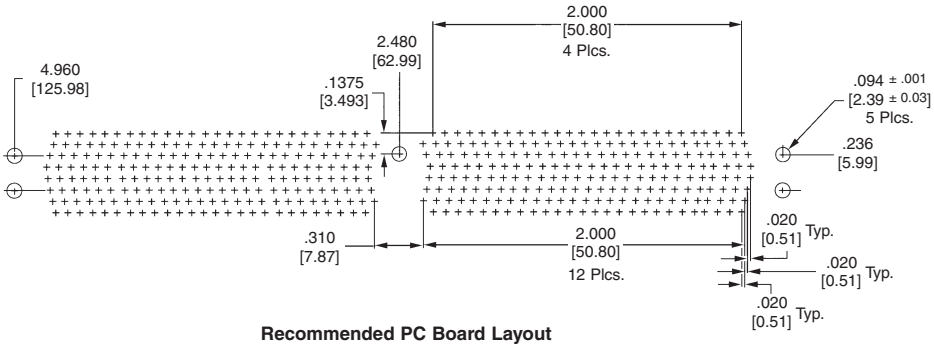

Recommended PC Board Layout

Catalog 1308940
Revised 9-14

www.te.com

Dimensions are shown for reference purposes only. Specifications subject to change.

Dimensions are in millimeters unless otherwise specified.

USA: +1 800 522 6752
Asia Pacific: +86 0 400 820 6015
UK: +44 800 267 666

For additional support numbers please visit www.te.com

AMP-HDI 8-Row, 428-Position Connector (Continued)

LRM Daughterboard Connector

Part Number 447444

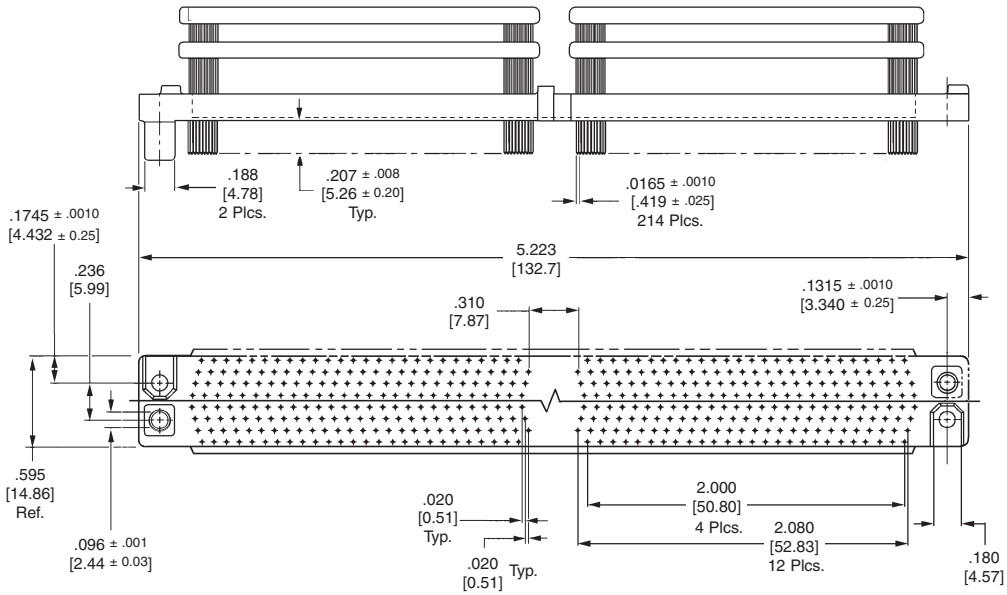

Material and Finish

Housing — Polyphenylene sulfide per MIL-M-24519

Contacts — Beryllium copper, plated .000050 [0.00127] min. gold per MIL-G-45204 in the contact area, over .000050 [0.00127] min. on the entire contact per QQ-N-290

Related Product Data

Mates with — Receptacle, page 1-37

Available Hardware — Shell Assembly, Polarizing Keys

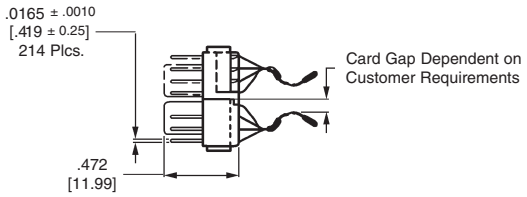

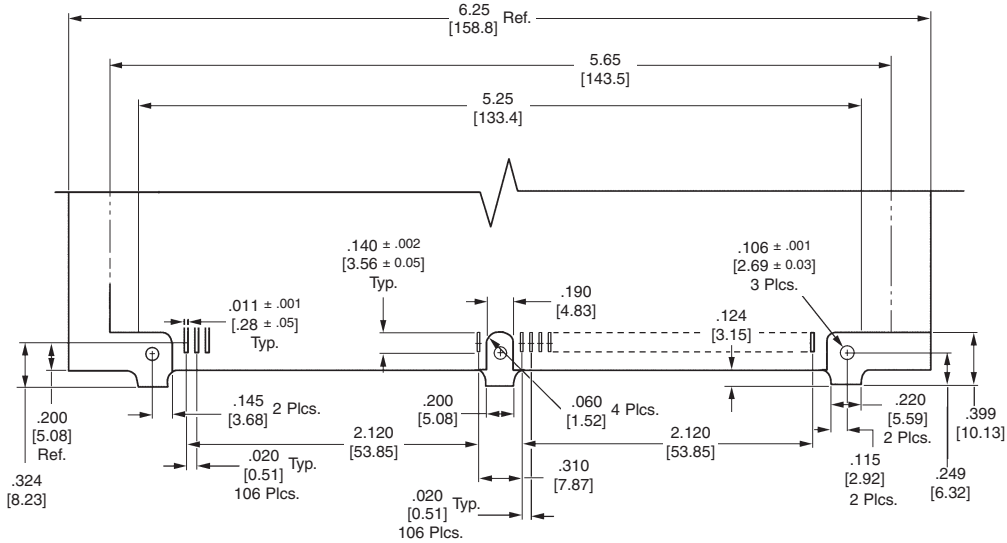

Recommended PC Board Layout

Plug Housing Assembly		Part Number
Plug Half (214 Pos.)	B Side	447444-4
		447444-2
	A Side	447444-3
		447444-1

Note: 8-Row Housing Dim. (Typ.) —
Plug, 5.223 [132.66] L x .585 [14.86] W x .472 [11.99] H.

Dimensions are shown for reference purposes only. Specifications subject to change.

Dimensions are in millimeters unless otherwise specified.

USA: +1 800 522 6752
Asia Pacific: +86 0 400 820 6015
UK: +44 800 267 666

For additional support numbers please visit www.te.com

AMP-HDI Connector Accessories

External Key for Part Number 445270 and Part Number 447447

Material — Passivated stainless steel. Fasten with 2-56 cap screw x .50" long not included.

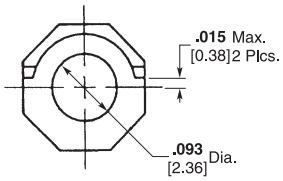

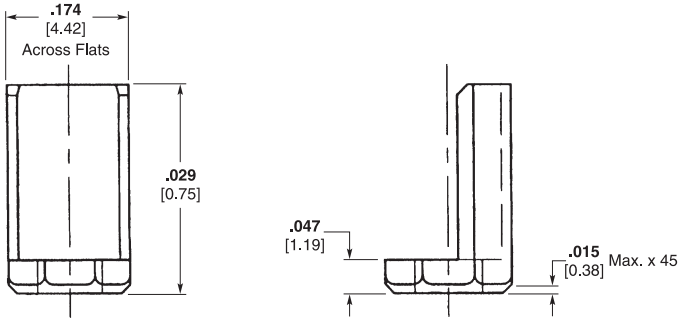

Part Number 445282-1

Threaded Post Guide for Part Number 445270 and Part Number 447447

Material — Passivated stainless steel. Fasten with 2-56 nut not included.

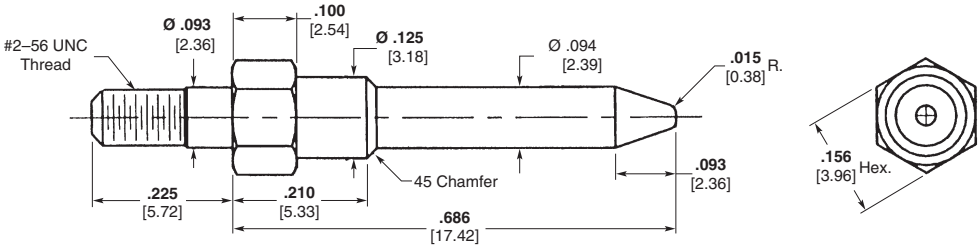

Part Number 447448-1

Catalog 1308940
Revised 9-14

www.te.com

Dimensions are shown for reference purposes only. Specifications subject to change.

Dimensions are in millimeters unless otherwise specified.

USA: +1 800 522 6752
Asia Pacific: +86 0 400 820 6015
UK: +44 800 267 666

For additional support numbers please visit www.te.com

AMP-HDI Connector Shell Accessories

Protective Shell for Part Number 447444

Part Number 447445-2
Side "A" Shell With Captive Screws

Part Number 447446-2
Side "B" Shell Without Captive Screws

Material — Aluminum

Finish — Chromate conversion.
Special shell markings available.

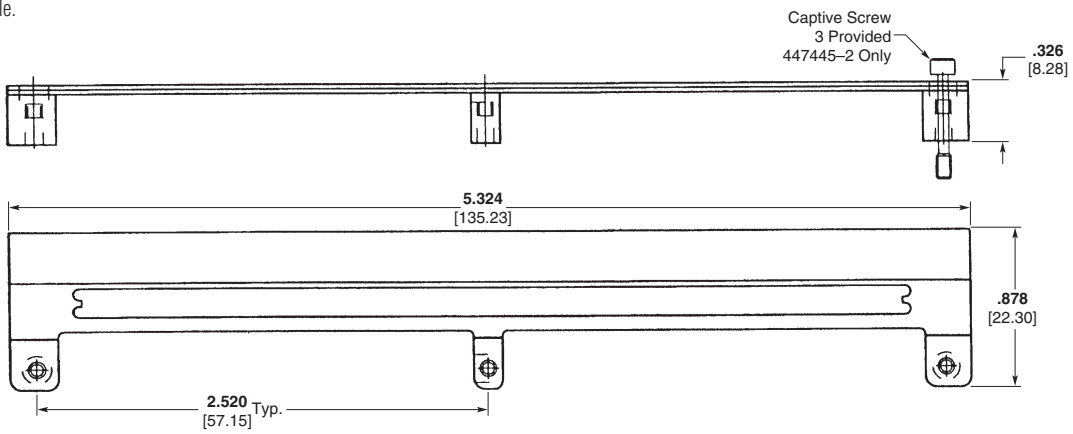

Protective Shell for Part Number 445269

Part Number 447007-2
Side "A" Shell With Captive Screws

Part Number 447006-2
Side "B" Shell Without Captive Screws

Material — Aluminum

Finish — Chromate conversion.
Special shell markings available.

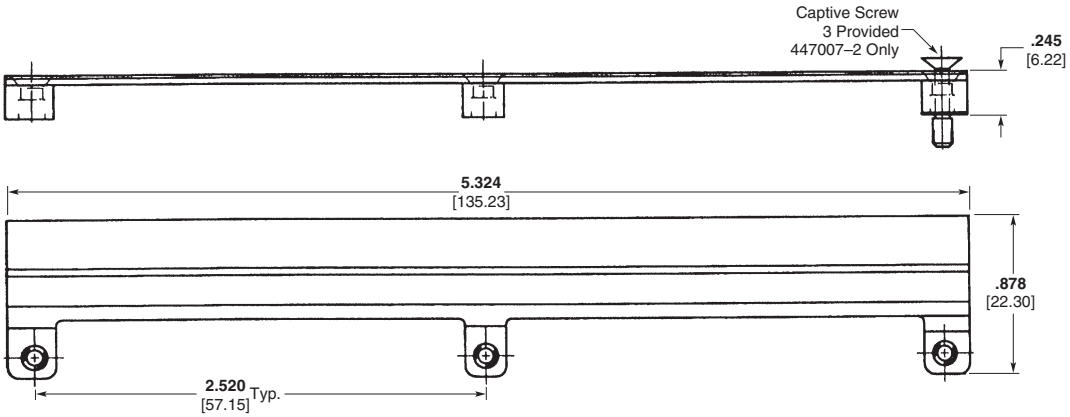

Dimensions are shown for reference purposes only. Specifications subject to change.

Dimensions are in millimeters unless otherwise specified.

USA: +1 800 522 6752
Asia Pacific: +86 0 400 820 6015
UK: +44 800 267 666

For additional support numbers please visit www.te.com

Introduction

Product Facts

- **Contacts are on .075 x .125 [1.91 x 3.18] centers**
- **Pin headers are provided with pin protectors**
- **Box receptacles contacts are available in flow solder, solder eyelet and straddle mount styles**
- **Qualified to MIL-C-55302/24, /25, /23, /156**
- **Four-beam box-type receptacle contact design provides four areas of contact per connection**

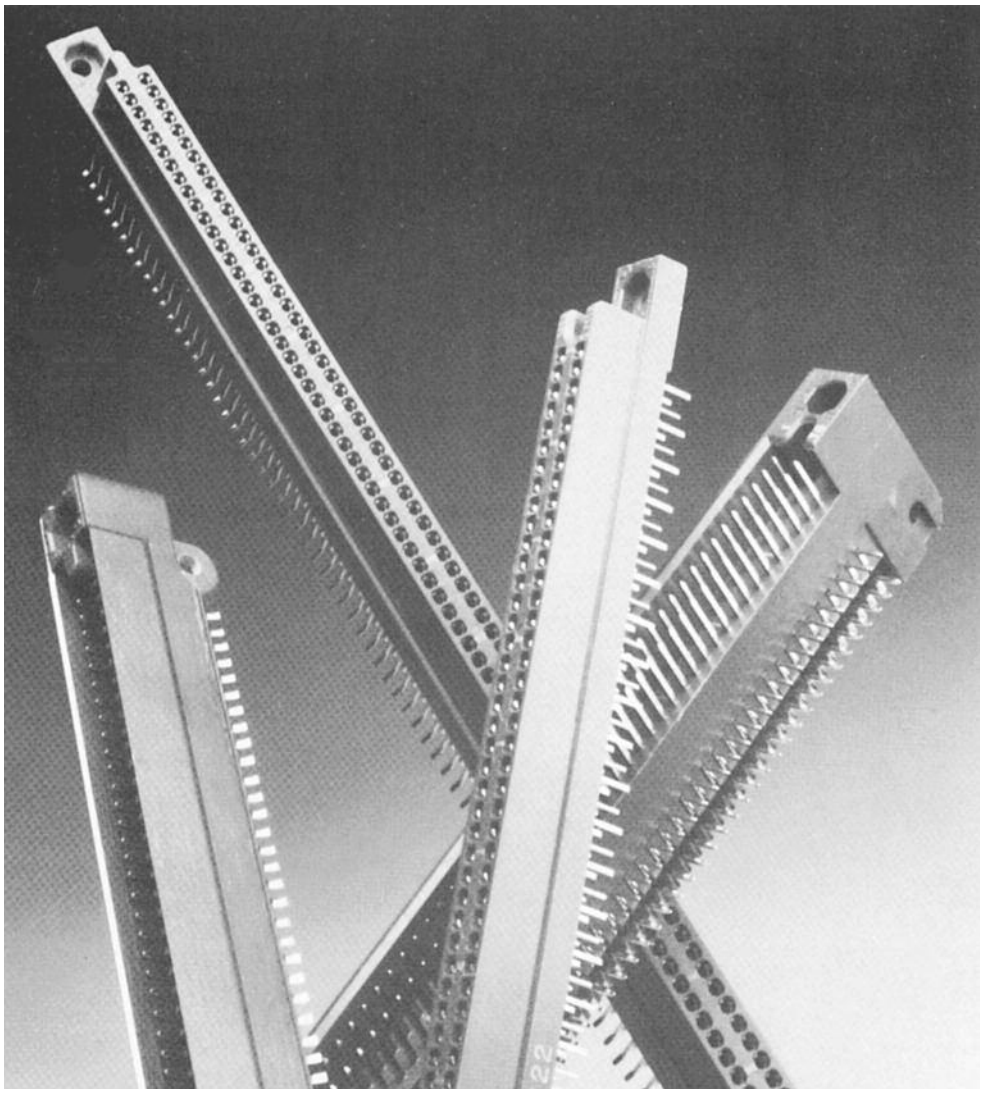

The .075 [1.91] centerline Box Connector series is available in a 2-row configuration with pin counts from 10 to 180 positions and uses the reliable four-beam box contact. The tighter centerline spacing provides more pins within a specified distance and the staggered footprint allows for easier manufacturing of the printed circuit board.

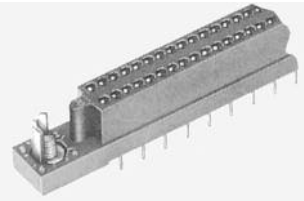

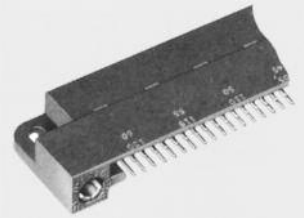

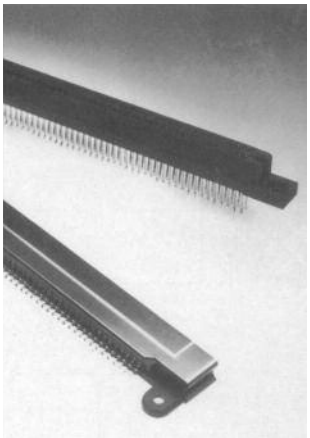

Catalog 1308940
Revised 9-14

www.te.com

Dimensions are shown for reference purposes only. Specifications subject to change.

Dimensions are in millimeters unless otherwise specified.

USA: +1 800 522 6752
Asia Pacific: +86 0 400 820 6015
UK: +44 800 267 666

For additional support numbers please visit www.te.com

Receptacle Assemblies for Flow Soldering — MIL-C-55302 Qualified

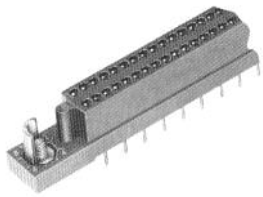

Related Product Data

Mates with — Pin Headers, pages 1-44 and 1-45

External Keying — page 1-80

Recommended PC Board Layout — page 1-47

Type Y

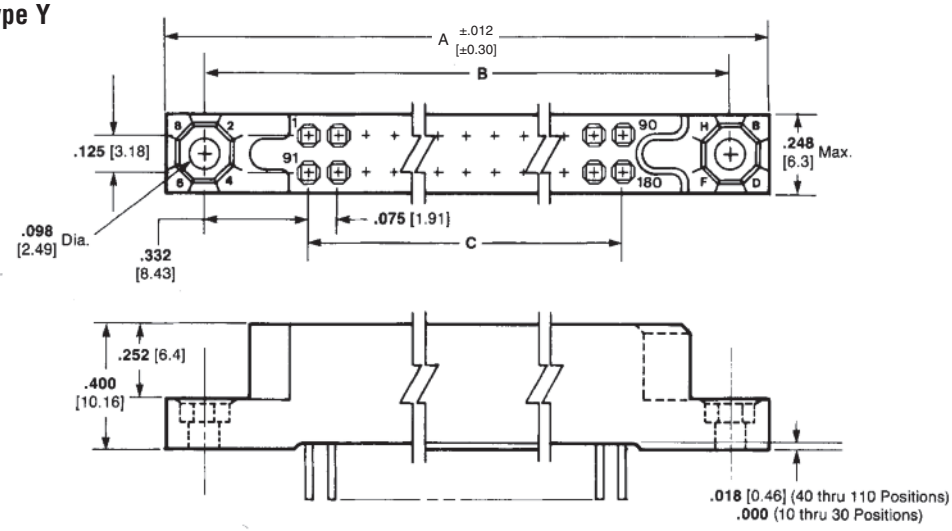

Type Z

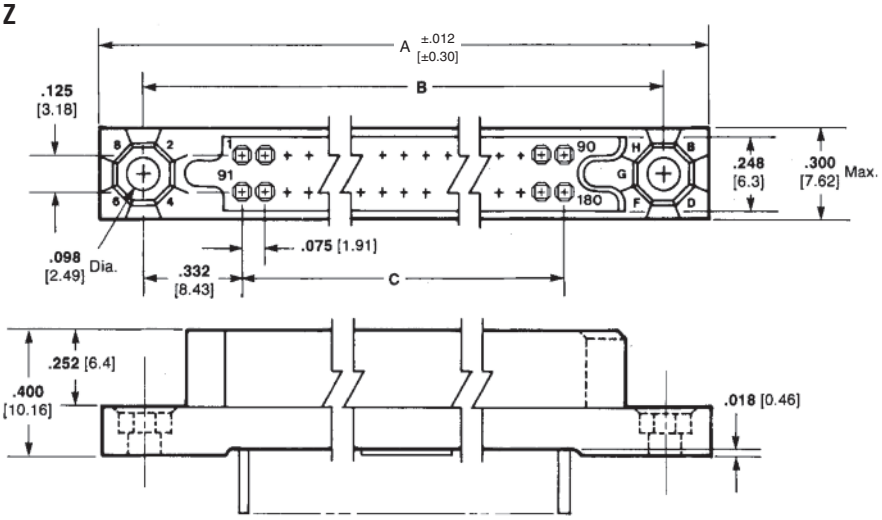

Contact Styles

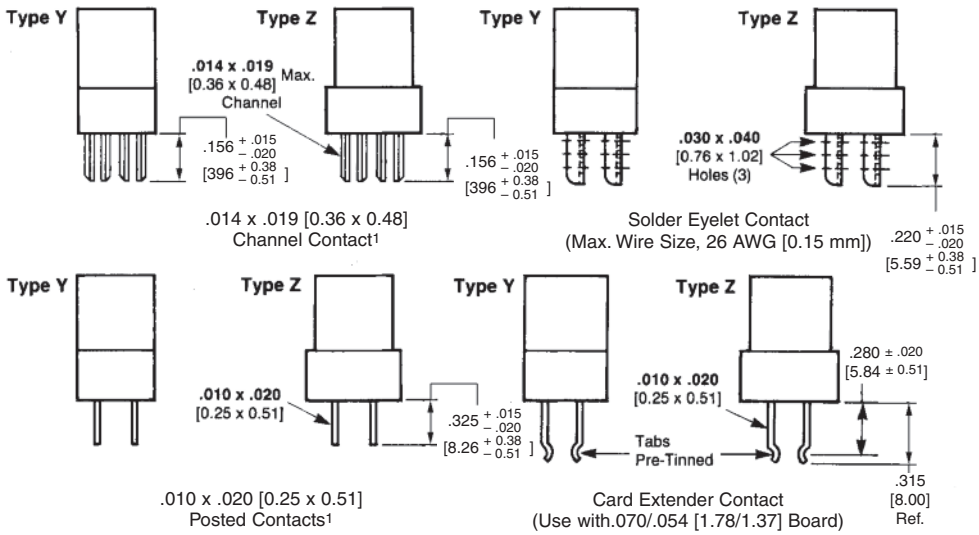

Dimensions are shown for reference purposes only. Specifications subject to change.

Dimensions are in millimeters unless otherwise specified.

USA: +1 800 522 6752
Asia Pacific: +86 0 400 820 6015
UK: +44 800 267 666

For additional support numbers please visit www.te.com

Receptacle Assemblies for Flow Soldering — MIL-C-55302 Qualified (Continued)

Commercial Receptacle Assemblies

Housing Material—In accordance with MIL-C-55302 or MIL-M-24519 type GLCP-30F

Contact Material and Finish—Beryllium copper per QQ-C-533 or copper nickel silicon per ASTM B422 and ASTM B888

Channel Contact, Posted Contact and Card Extender Contact—Plated .000030 [0.00076] gold in contact area, .000100 [0.00254] tin-lead on the tails over .00030 [0.00076] nickel on the entire contact.

Solder Eyelet Contact—Plated .000030 [0.00076] gold in the contact area, .000100 [0.00254] tin-lead on the tails over .000030 [0.00076] nickel on the entire contact.

No. of Pos.	Housing Type	Dimensions A	Dimensions B	Dimensions C	.014 x .019 [0.36 x 0.48] Channel Contacts AMP Part No.	Solder Eyelet Contacts AMP Part No.	.010 x .020 [0.25 x 0.51] Posted Contacts AMP Part No.	Card Extender Contacts AMP Part No.
180	Z	7.630 193.8	7.340 186.44	6.675 169.55	531813-4	531811-4	531815-4	531817-4
160	Z	6.880 174.75	6.590 167.39	5.925 150.5	531813-3	—	—	531817-3
150	Z	6.505 165.23	6.215 157.86	5.550 140.97	531813-2	—	—	531817-2
120	Z	5.380 136.65	5.090 129.29	4.425 112.4	—	531811-1	531815-1	531817-1
100	Y	4.630 117.6	4.340 110.24	3.675 93.35	—	1-531810-0	—	1-531816-0
80	Y	3.880 98.55	3.590 91.19	2.925 74.3	531812-8	531810-8	—	—
50	Y	2.755 69.98	2.465 62.61	1.800 45.72	531812-5	531810-5	—	531816-5
40	Y	2.380 60.45	2.090 53.09	1.425 36.2	531812-4	531810-4	—	531816-4
30	Y	2.005 50.93	1.715 43.56	1.050 26.67	531812-3	—	—	531816-3
10	Y	1.255 31.88	.965 24.51	.300 7.62	—	—	531814-1	—

Military Receptacle Assemblies

Housing Material—In accordance with MIL-C-55302 or MIL-M-24519 type GLCP-30F

Contact Material and Finish—Beryllium copper per QQ-C-533

Channel Contact, Posted Contact and Card Extender Contact—Plated .000050 [0.00127] gold in the contact area, .000100 [0.00254] tin-lead on the tails over .000030 [0.00076] nickel on the entire contact.

Solder Eyelet Contact—Plated .000050 [0.00127] gold in the contact area, .000100 [0.00254] tin-lead on the tails over .000050 [0.00127] nickel on the entire contact.

No. of Pos.	Housing Type	Dimensions A	Dimensions B	Dimensions C	.014 x .019 [0.36 x 0.48] Channel Contacts		Solder Eyelet Contacts		.010 x .020 [0.25 x 0.51] Posted Contacts		Card Extender Contacts	
					MIL-Part No. M55302/	AMP Part No.	MIL-Part No. M55302/	AMP Part No.	MIL-Part No. M55302/	AMP Part No.	MIL-Part No. M55302/	AMP Part No.
180	Z	7.630 193.8	7.340 186.44	6.675 169.55	25-29	531145-4	25-30	531146-4	25-31	531147-4	25-32	531148-4
160	Z	6.880 174.75	6.590 167.39	5.925 150.5	25-25	531145-3	25-26	531146-3	25-27	531147-3	25-28	531148-3
150	Z	6.505 165.23	6.215 157.86	5.550 140.97	25-21	531145-2	25-22	531146-2	25-23	531147-2	25-24	531148-2
120	Z	5.380 136.65	5.090 129.92	4.425 112.4	25-17	531145-1	25-18	531146-1	25-19	531147-1	25-20	531148-1
110	Y	5.005 127.13	4.715 119.76	4.050 102.87	24-85	1-531142-1	24-86	1-531129-1	24-87	1-531143-1	24-88	1-531144-1
100	Y	4.630 117.6	4.340 110.24	3.675 93.35	24-81	1-531142-0	24-82	1-531129-0	24-83	1-531143-0	24-84	1-531144-0
90	Y	4.255 108.08	3.965 100.71	3.300 83.82	24-77	531142-9	24-78	1-531129-2	24-79	531143-9	24-80	531144-9
80	Y	3.880 98.55	3.590 91.19	2.925 74.3	24-73	531142-8	24-74	531129-9	24-75	531143-8	24-76	531144-8
70	Y	3.505 89.03	3.215 81.66	2.550 64.77	24-69	531142-7	24-70	531129-8	24-71	531143-7	24-72	531144-7
60	Y	3.130 79.5	2.840 72.14	2.175 55.25	24-65	531142-6	24-66	531129-7	24-67	531143-6	24-68	531144-6
50	Y	2.755 69.98	2.465 62.61	1.800 45.72	24-61	531142-5	24-62	531129-6	24-63	531143-5	24-64	531144-5
40	Y	2.380 60.45	2.090 53.09	1.425 36.2	24-57	531142-4	24-58	531129-5	24-59	531143-4	24-60	531144-4
30	Y	2.005 50.93	1.715 43.56	1.050 26.67	24-53	531142-3	24-54	531129-4	24-55	531143-3	24-56	531144-3
20	Y	1.630 41.4	1.340 34.04	.675 17.15	24-49	531142-2	24-50	531129-3	24-51	531143-2	24-52	531144-2
10	Y	1.255 31.88	.965 24.51	.300 7.62	24-45	531142-1	24-46	531129-2	24-47	531143-1	24-48	531144-1

Dimensions are shown for reference purposes only. Specifications subject to change.

Dimensions are in millimeters unless otherwise specified.

USA: +1 800 522 6752
Asia Pacific: +86 0 400 820 6015
UK: +44 800 267 666

For additional support numbers please visit www.te.com

Straddle Mount Pin Header Assemblies with Anodized Pin Protectors — MIL-C-55302 Qualified

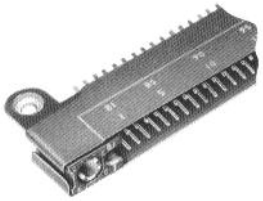

Related Product Data

Mates with — Receptacles, pages 1-42 and 1-43

External Keying — page 1-80

Recommended PC Board Layout — page 1-47

Commercial Pin Header Assemblies

Housing Material — In accordance with MIL-C-55302 or MIL-M-24519 Type GLCP-30F

Pin Protector Material — Anodized aluminum per QQ-A-250/1

Contact Material and Finish — Brass per QQ-B-626 plated .000030 [0.00076] gold in the contact area, .000100 [0.00254] tin-lead on the tabs over .000050 [0.00127] nickel on the entire contact.

Military Pin Header Assemblies

Housing Material—In accordance with MIL-C-55302 or MIL-M-24519 Type GLCP-30F

Pin Protector Material—Anodized aluminum per QQ-A-250/1

Contact Material and Finish—Brass per QQ-B-626 plated .000050 [0.000127] gold in the contact area, .000100 [0.00254] tin-lead on the tabs over .000050 [0.00127] nickel on the entire contact.

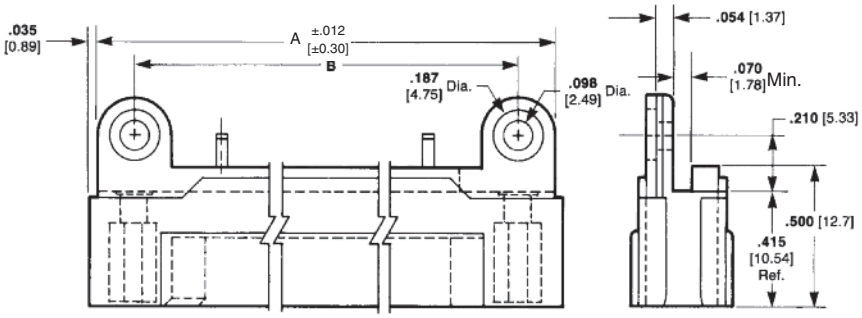

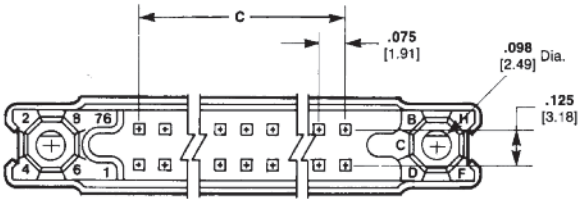

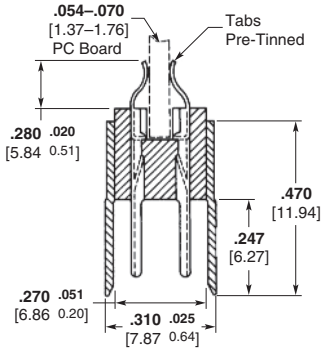

No. of Pos.	Dimensions			Military Pin Header	
	A	B	C	M55302/	AMP Part No.
180	7.630 193.8	7.340 186.44	6.675 169.55	23-30	530785-4
160	6.880 174.75	6.590 167.39	5.925 150.5	23-29	530785-5
150	6.505 165.23	6.215 157.86	5.550 140.97	23-28	530785-2
120	5.380 136.65	5.090 129.29	4.425 112.4	23-27	530785-6
110	5.005 127.13	4.715 119.76	4.050 102.87	23-26	530785-7
100	4.630 117.6	4.340 110.24	3.675 93.35	23-25	530785-8
90	4.255 108.08	3.965 100.71	3.300 83.82	23-24	1-530785-7
80	3.880 98.55	3.590 91.19	2.925 74.3	23-23	530785-9
70	3.505 89.03	3.215 81.66	2.550 64.77	23-22	1-530785-0
60	3.130 79.5	2.840 72.14	2.175 55.25	23-21	1-530785-1
50	2.755 69.98	2.465 62.61	1.800 45.72	23-20	1-530785-2
40	2.380 60.45	2.090 53.09	1.425 36.2	23-19	1-530785-3
30	2.005 50.93	1.715 43.56	1.050 26.67	23-18	1-530785-4
20	1.630 41.4	1.340 34.04	.675 17.15	23-17	1-530785-5
10	1.255 31.88	.965 24.51	.300 7.62	23-16	1-530785-6

Dimensions are shown for reference purposes only. Specifications subject to change.

Dimensions are in millimeters unless otherwise specified.

USA: +1 800 522 6752
Asia Pacific: +86 0 400 820 6015
UK: +44 800 267 666

For additional support numbers please visit www.te.com

Right-Angle Pin Header Assemblies for Flow Soldering — MIL-C-55302 Qualified

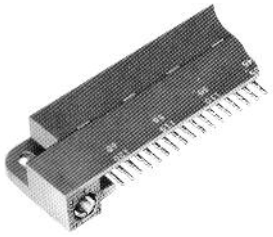

Related Product Data

Mates with — Receptacles, pages 1-42 and 1-43

External Keying—page 1-80

Recommended PC Board Layout — page 1-47

Commercial Pin Header Assemblies

Housing Material — In accordance with MIL-C-55302

Contact Material and Finish — Brass per QQ-B-626 plated .000030 [0.00076] gold in the contact area, .000100 [0.00254] tin-lead on the tails over .000050 [0.00127] nickel on the entire contact

Military Pin Header Assemblies

Housing Material — In accordance with MIL-C-55302

Contact Material and Finish — Brass per QQ-B-626 plated .000050 [0.00127] gold in the contact area, .000100 [0.00254] tin-lead on the tails over .000050 [0.00127] nickel on the entire contact

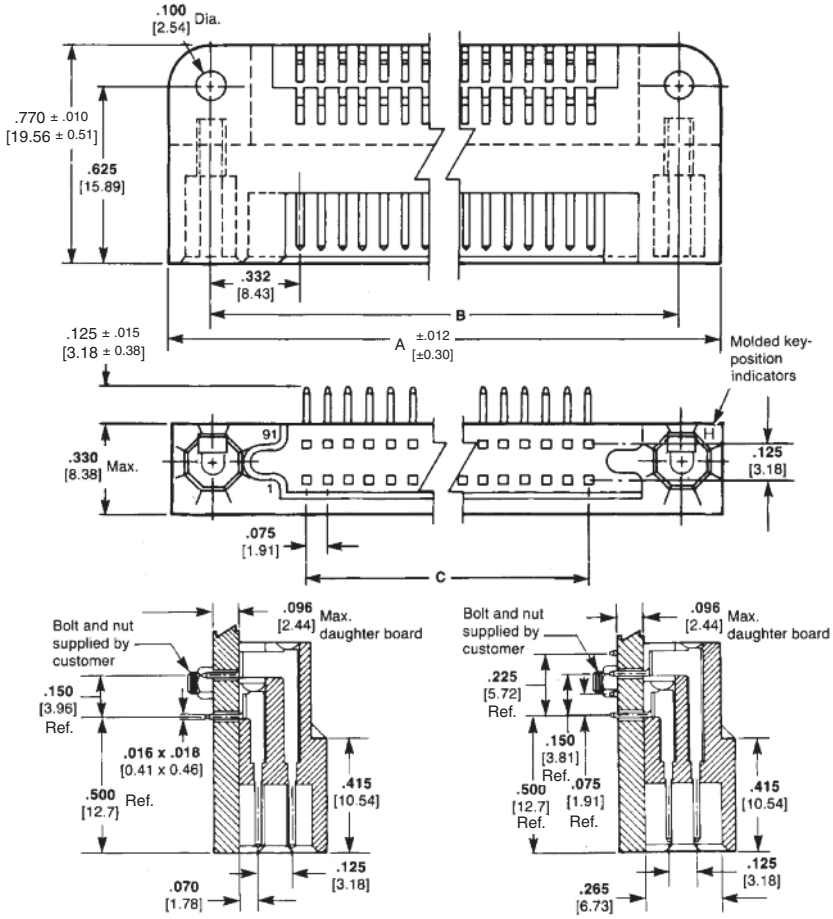

In-Line Tails — Type I
(2-row circuit board layout)

Staggered Tails — Type II
(4-row circuit board layout)

No. of Positions	Dimensions			In-line, Type I			Staggered, Type II		
	A	B	C	Commercial Part No.	MIL-Part No. M55302/	AMP MIL Part No.	Commercial Part No.	MIL-Part No. M55302/	AMP MIL Part No.
180	7.630 193.8	7.340 186.44	6.675 169.55	—	156-15	1-531719-5	1-531124-5	156-30	1-531720-5
160	6.880 174.75	6.590 167.39	5.925 150.5	1-531127-4	156-14	1-531719-4	—	156-29	1-531720-4
150	6.505 165.23	6.215 157.86	5.550 140.97	—	156-13	1-531719-3	1-531124-3	156-28	1-531720-3
120	5.380 136.65	5.090 129.29	4.425 112.4	—	156-12	1-531719-2	—	156-27	1-531720-2
110	5.005 127.13	4.715 119.76	4.050 102.87	—	156-11	1-531719-1	—	156-26	1-531720-1
100	4.630 117.6	4.340 110.24	3.675 93.35	—	156-10	1-531719-0	—	156-25	1-531720-0
90	4.255 108.08	3.965 100.71	3.300 83.82	—	156-09	531719-9	—	156-24	531720-9
80	3.880 98.55	3.590 91.19	2.925 74.3	—	156-08	531719-8	—	156-23	531720-8
70	3.505 89.03	3.215 81.66	2.550 64.77	—	156-07	531719-7	—	156-22	531720-7
60	3.130 79.5	2.840 72.14	2.175 55.25	—	156-06	531719-6	531124-6	156-21	531720-6
50	2.755 69.98	2.465 62.61	1.800 45.72	—	156-05	531719-5	531124-5	156-20	531720-5
40	2.380 60.45	2.090 53.09	1.425 36.2	—	156-04	531719-4	531124-4	156-19	531720-4
30	2.005 50.93	1.715 43.56	1.050 26.67	—	156-03	531719-3	531124-3	156-18	531720-3
20	1.630 41.4	1.340 34.04	.675 17.15	—	156-02	531719-2	—	156-17	531720-2
10	1.255 31.88	.965 24.51	.300 7.62	—	156-01	531719-1	—	156-16	531720-1

Catalog 1308940
Revised 9-14

www.te.com

Dimensions are shown for reference purposes only. Specifications subject to change.

Dimensions are in millimeters unless otherwise specified.

USA: +1 800 522 6752
Asia Pacific: +86 0 400 820 6015
UK: +44 800 267 666

For additional support numbers please visit www.te.com

Stacking Connectors

Receptacle Assembly

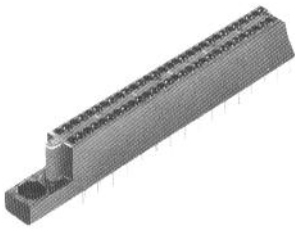

Housing Material — Blue Diallyl Phthalate or MIL-M-24519 Type GLCP-30F

Contact Material and Finish — Beryllium copper or copper nickel silicon per ASTM B422 and ASTM B888, plated gold .000050 [0.00127] thick all over nickel .000030 [0.00076] thick

Related Product Data

Mates with — Pin Shroud Housing

External Keying — page 1-80

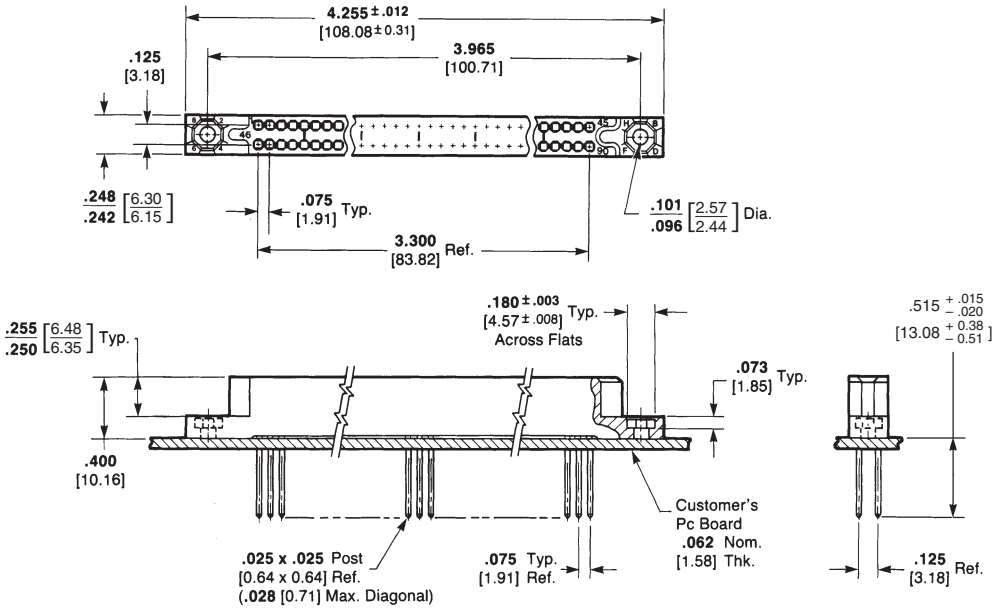

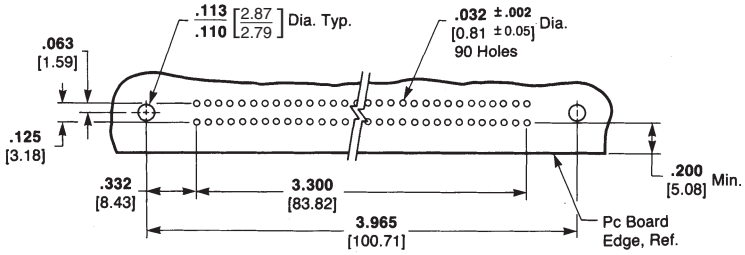

Recommended PC Board Layout

Pin Shroud Housing

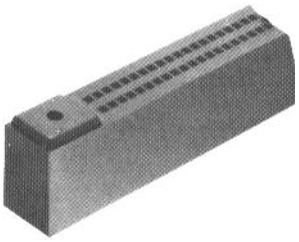

Housing Material — Blue Polyester

Related Product Data

Mates with — Receptacle Assembly

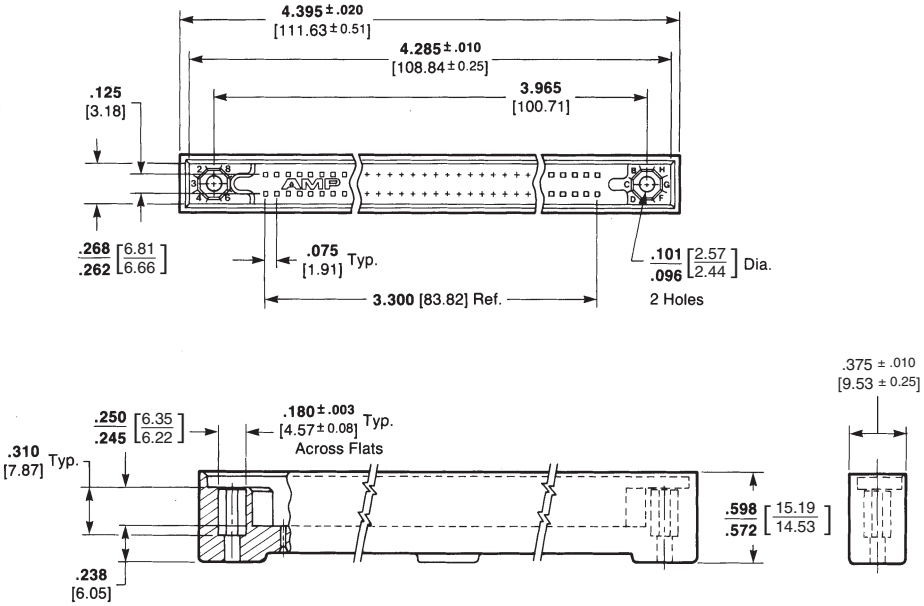

Dimensions are shown for reference purposes only. Specifications subject to change.

Dimensions are in millimeters unless otherwise specified.

USA: +1 800 522 6752
Asia Pacific: +86 0 400 820 6015
UK: +44 800 267 666

For additional support numbers please visit www.te.com

Recommended Printed Circuit Board Layouts

Receptacle Assemblies

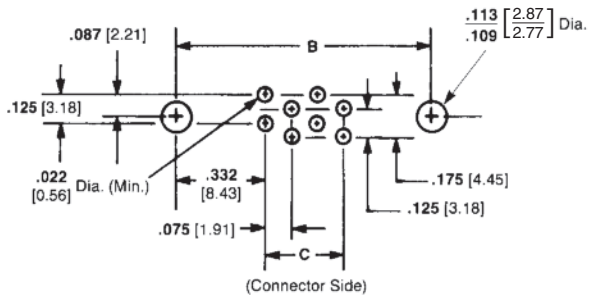

.014 x .019 [0.36 x 0.48]
Channel Contacts

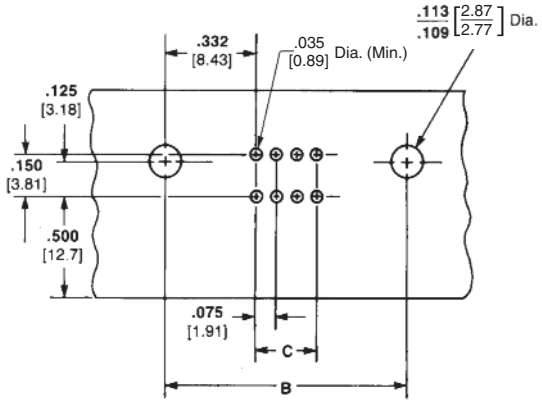

In-Line, Right-Angle

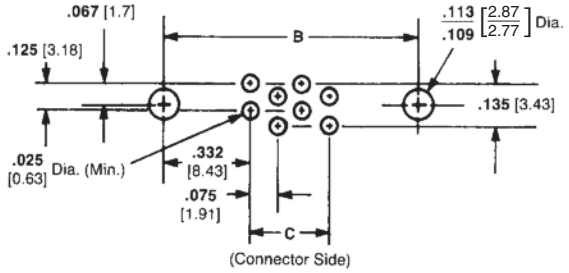

.010 x .020 [0.25 x 0.51]
Posted Contacts

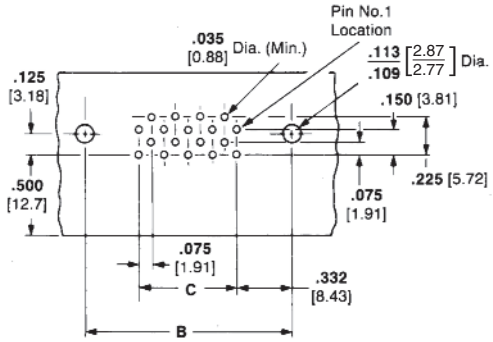

Staggered, Right-Angle
(Connector Side)

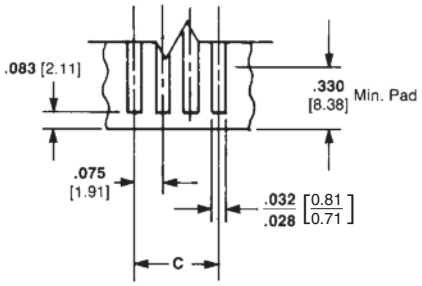

Card Extender Contacts

No. of Pos.	Dimensions	
	B	C
180	7.340 186.44	6.675 169.55
160	6.590 167.39	5.925 150.5
150	6.215 157.86	5.550 140.97
120	5.090 129.29	4.425 112.4
110	4.715 119.76	4.050 102.87
100	4.340 110.24	3.675 93.35
90	3.965 100.71	3.300 83.82
80	3.590 91.19	2.925 74.3
70	3.215 81.66	2.550 64.77
60	2.840 72.14	2.175 55.25
50	2.465 62.61	1.800 45.72
40	2.090 53.09	1.425 36.2
30	1.715 43.56	1.050 26.67
20	1.340 34.04	.675 17.15
10	.965 24.51	.300 7.62

Note: These drawings are for reference only. Consult TE Connectivity for board layout details.

Pin Header Assemblies

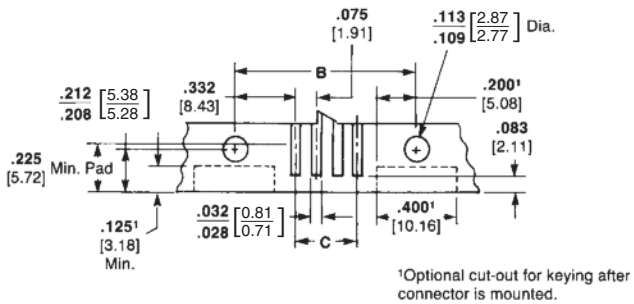

Straddle Mount Assembly

Catalog 1308940
Revised 9-14

www.te.com

Dimensions are shown for reference purposes only. Specifications subject to change.

Dimensions are in millimeters unless otherwise specified.

USA: +1 800 522 6752
Asia Pacific: +86 0 400 820 6015
UK: +44 800 267 666

For additional support numbers please visit www.te.com

Introduction

Product Facts

- **Contacts are on .100 x .100 [2.54 x 2.54] centers**
- **Four-beam box-type contact design provides four areas of contact per connection**
- **Quad-beam redundancy offers high performance and reliability**
- **Sealed versions available**
- **Straddle mount pin headers have pretinned tabs for connection to daughter boards**
- **Pin headers are provided with pin protectors**
- **Straddle mount pin headers have replaceable contacts**
- **Box receptacle contacts are available in flow solder, solder eyelet, straddle mount, wrap-type and crimp styles**
- **Pin header assemblies are available in right-angle, straddle mount and crimp styles**
- **Solder tails are tin-lead plated for solderability**
- **Signal-coax mix connectors available**
- **Qualified to MIL-C-55302/26, /27, /110, /113, /129, /130**

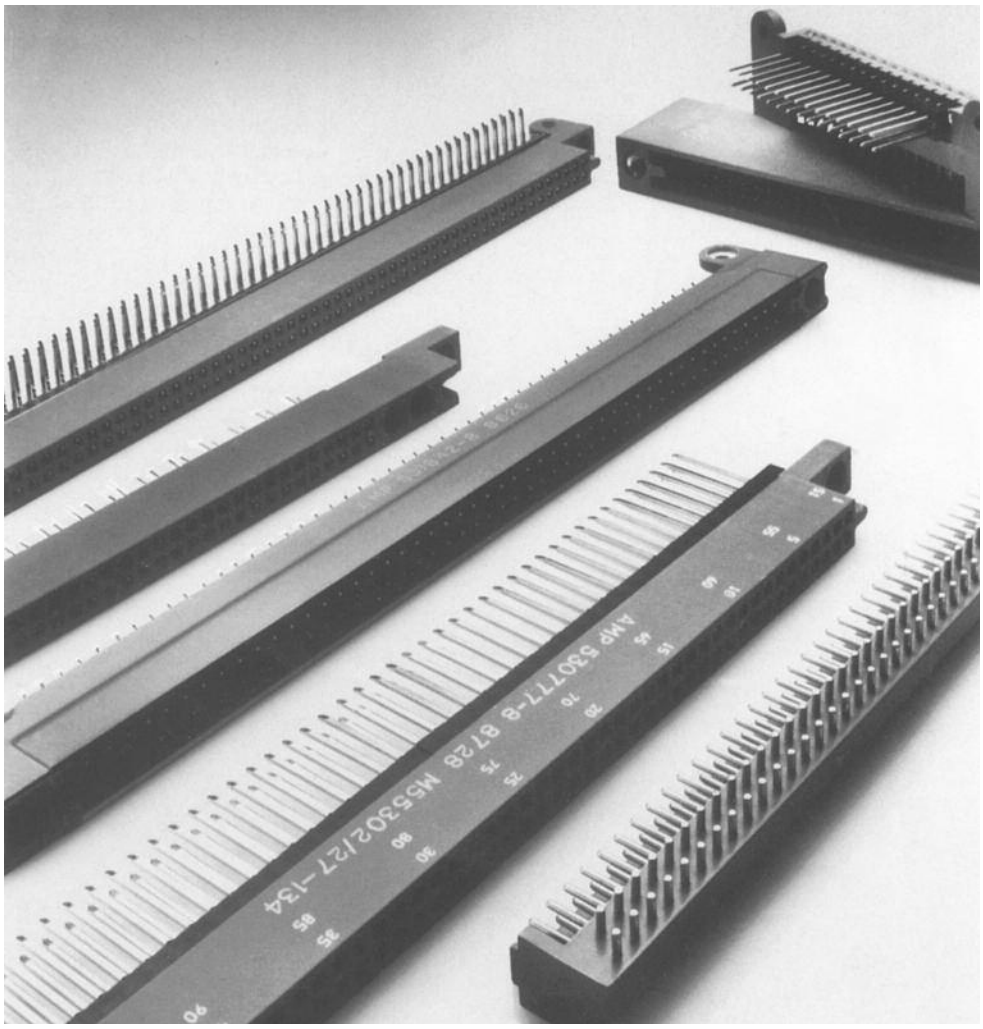

The .100 [2.54] Box Contact Connector series is available in 2, 3 and 4-row configurations with pin counts up to 300 positions. Each configuration uses the unique, very reliable four-beam box design which offers low applied cost while maintaining high performance and reliability. The ability to choose different sizes; housing materials; terminations; sealed versions; hybrids; etc. provides one with needed versatility in designing a system.

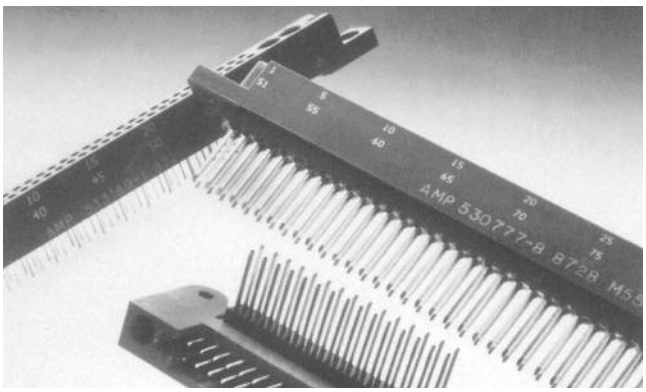

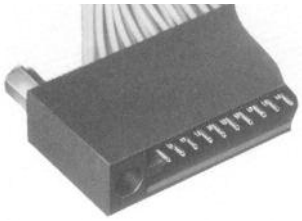

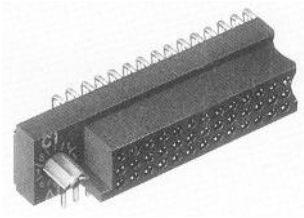

Dimensions are shown for reference purposes only. Specifications subject to change.

Dimensions are in millimeters unless otherwise specified.

USA: +1 800 522 6752
Asia Pacific: +86 0 400 820 6015
UK: +44 800 267 666

For additional support numbers please visit www.te.com

2-Row Receptacle Assemblies — MIL-C-55302 Qualified

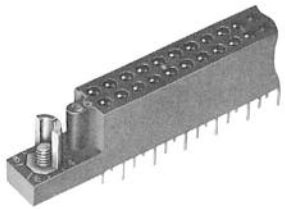

Related Product Data

Mates with — Pin Headers and Assemblies, pages 1-56 to 1-60

External Keying — page 1-80

Recommended PC Board Layout — page 1-74

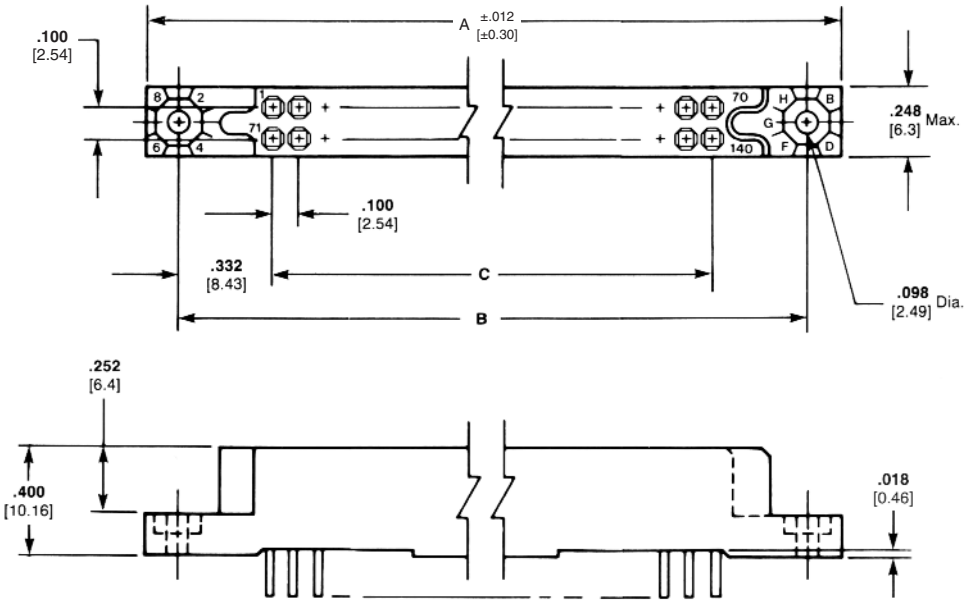

Contact Styles

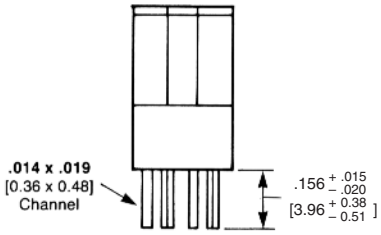

.014 x .019 [0.36 x 0.48] Channel Contact[1] (Flow Solder)

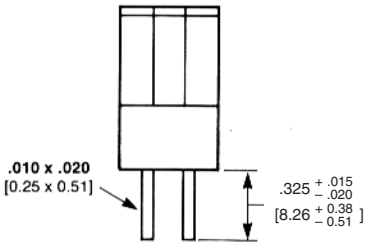

.010 x .020 [0.25 x 0.51] Posted Contact[1]

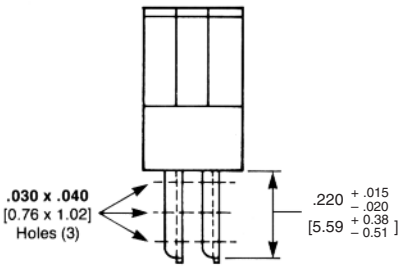

Solder Eyelet Contact Max. Wire Size, 26 AWG [0.15 mm²]

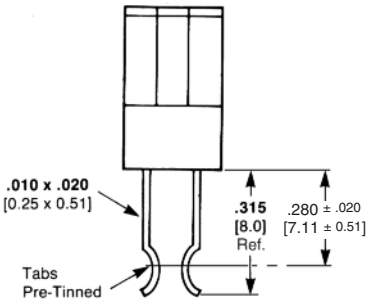

Card Extender Contact (Use with .070/.054 [1.78/1.37] Board)

[1] For flow solder application

Catalog 1308940
Revised 9-14

www.te.com

Dimensions are shown for reference purposes only. Specifications subject to change.

Dimensions are in millimeters unless otherwise specified.

USA: +1 800 522 6752
Asia Pacific: +86 0 400 820 6015
UK: +44 800 267 666

For additional support numbers please visit www.te.com

2-Row Receptacle Assemblies — MIL-C-55302 Qualified (Continued)

Commercial Receptacle Assemblies

Housing Material — In accordance with MIL-C-55302

Contact Material and Finish — Beryllium copper or copper nickel silicon per ASTM B422 and ASTM B888
Channel Contact, Posted Contact and Card Extender Contact — Plated .000030 [0.00076] gold in contact area. .000100 [0.00254] tin-lead on the tails over .000030 [0.00076] nickel on the entire contact.

Solder Eyelet Contact — Plated .000030 [0.00076] gold in contact area, .000100 [0.00254] tin-lead on tails over .000030 [0.00076] nickel on the entire contact.

No. of Pos.	Dimensions A	Dimensions B	Dimensions C	.014 x .019 [0.36 x 0.48] Channel Contacts AMP Part No.	.010 x .020 [0.25 x 0.51] Posted Contacts AMP Part No.	Solder Eyelet Contacts AMP Part No.	Card Extender Contacts AMP Part No.
140	**7.855** 199.52	**7.565** 192.15	**6.900** 175.26	1-531832-3	—*	—*	—*
134	**7.555** 191.90	**7.265** 184.53	**6.600** 167.64	—*	—*	1-531833-2	—*
130	**7.355** 186.82	**7.065** 179.45	**6.400** 162.56	—*	—*	—*	—*
120	**6.855** 174.12	**6.565** 166.75	**5.900** 149.86	—*	—*	—*	—*
110	**6.355** 161.42	**6.065** 154.05	**5.400** 137.16	531832-9	—*	—*	531835-9
100	**5.855** 148.72	**5.565** 141.35	**4.900** 124.46	531832-8	—*	—*	—*
90	**5.355** 136.02	**5.065** 128.65	**4.400** 111.76	—*	—*	—*	—*
80	**4.855** 123.32	**4.565** 115.95	**3.900** 99.06	—*	531834-6	—*	—*
70	**4.355** 110.62	**4.065** 103.25	**3.400** 83.36	—*	—*	—*	—*
60	**3.855** 97.92	**3.565** 90.55	**2.900** 73.66	—*	—*	531833-4	—*
50	**3.355** 85.22	**3.065** 77.85	**2.400** 60.96	—*	—*	—*	531835-3
40	**2.855** 72.52	**2.565** 65.15	**1.900** 48.26	—*	—*	—*	—*
30	**2.355** 59.82	**2.065** 52.4 5	**1.400** 35.56	—*	—*	—*	—*

* Part Numbers available upon request, contact TE Connectivity.

Military Receptacle Assemblies

Housing Material — In accordance with MIL-C-55302

Contact Material and Finish — Beryllium copper or copper nickel silicon per ASTM B422 and ASTM B888
Channel Contact, Posted Contact and Card Extender Contact — Plated .000050 [0.00127] gold in contact area, .000100 [0.00254] tin-lead on the tails over .000030 [0.00076] nickel on the entire contact.

Solder Eyelet Contact — Plated .000050 [0.00127] gold in contact area, in accordance with MIL-C-55302 .000100 [0.00254] tin-lead on tails over .000050 [0.00127] nickel on the entire contact.

No. of Pos.	Dimensions A	Dimensions B	Dimensions C	.014 x .019 [0.36 x 0.48] Channel Contacts		Solder Eyelet Contacts		.010 x .020 [0.25 x 0.51] Posted Contacts		Card Extender Contacts	
				MIL-Part No. M55302/	AMP Part No.	MIL-Part No. M55302/	AMP Part No.	MIL-Part No. M55302/	AMP Part No.	MIL-Part No. M55302/	AMP Part No.
140	**7.855** 199.52	**7.565** 192.15	**6.900** 175.26	27-193	2-530340-2	27-197	1-530758-3	27-201	1-530776-3	27-229	1-530782-3
134	**7.555** 191.90	**7.265** 184.53	**6.600** 167.64	27-192	2-530340-1	27-196	1-530758-2	27-200	1-530776-2	27-228	1-530782-2
130	**7.355** 186.82	**7.065** 179.45	**6.400** 162.56	27-191	2-530340-0	27-195	1-530758-1	27-199	1-530776-1	27-227	1-530782-1
120	**6.855** 174.12	**6.565** 166.75	**5.900** 149.86	27-190	1-530340-9	27-194	1-530758-0	27-198	1-530776-0	27-226	1-530782-0
110	**6.355** 161.42	**6.065** 154.05	**5.400** 137.16	27-99	530340-9	27-108	530758-9	27-117	530776-9	27-180	530782-9
100	**5.855** 148.72	**5.565** 141.35	**4.900** 124.46	27-98	530340-8	27-107	530758-8	27-116	530776-8	27-179	530782-8
90	**5.355** 136.02	**5.065** 128.65	**4.400** 111.76	27-97	530340-7	27-106	530758-7	27-115	530776-7	27-178	530782-7
80	**4.855** 123.32	**4.565** 115.95	**3.900** 99.06	27-96	530340-6	27-105	530758-6	27-114	530776-6	27-177	530782-6
70	**4.355** 110.62	**4.065** 103.25	**3.400** 83.36	27-95	530340-5	27-104	530758-5	27-113	530776-5	27-176	530782-5
60	**3.855** 97.92	**3.565** 90.55	**2.900** 73.66	27-94	530340-4	27-103	530758-4	27-112	530776-4	27-175	530782-4
50	**3.355** 85.22	**3.065** 77.85	**2.400** 60.96	27-93	530340-3	27-102	530758-3	27-111	530776-3	27-174	530782-3
40	**2.855** 72.52	**2.565** 65.15	**1.900** 48.26	27-92	530340-2	27-101	530758-2	27-110	530776-2	27-173	530782-2
30	**2.355** 59.82	**2.065** 52.45	**1.400** 35.56	27-91	530340-1	27-100	530758-1	27-109	530776-1	27-172	530782-1

Catalog 1308940
Revised 9-14

www.te.com

Dimensions are shown for reference purposes only. Specifications subject to change.

Dimensions are in millimeters unless otherwise specified.

USA: +1 800 522 6752
Asia Pacific: +86 0 400 820 6015
UK: +44 800 267 666

For additional support numbers please visit www.te.com

2-Row Receptacle Assemblies for Rack Mounting with Posted Contacts (Wrap-Type) — MIL-C-55302 Qualified

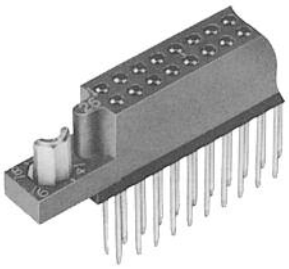

Related Product Data

Mates with — Pin Headers Assemblies, pages 1-56 to 1-60

External Keying — page 1-80

Recommended PC Board Layout — page 1-74

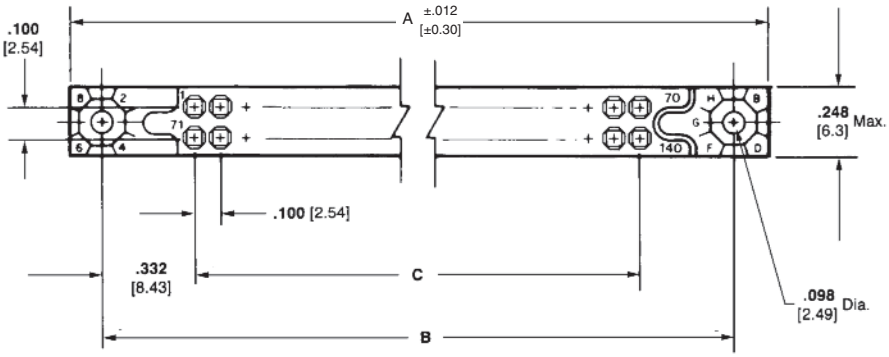

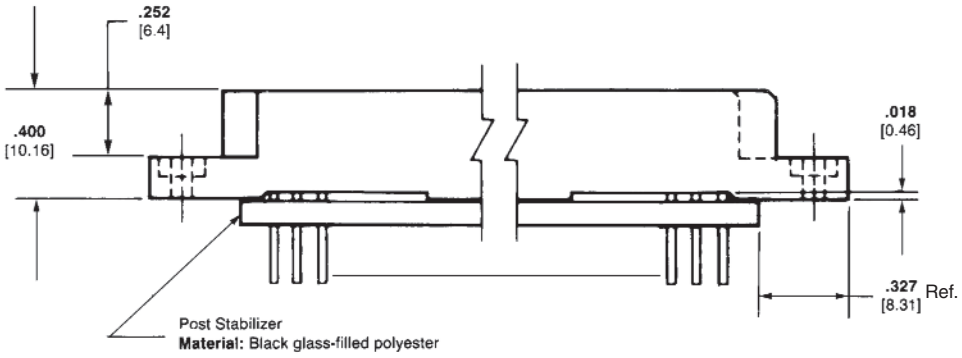

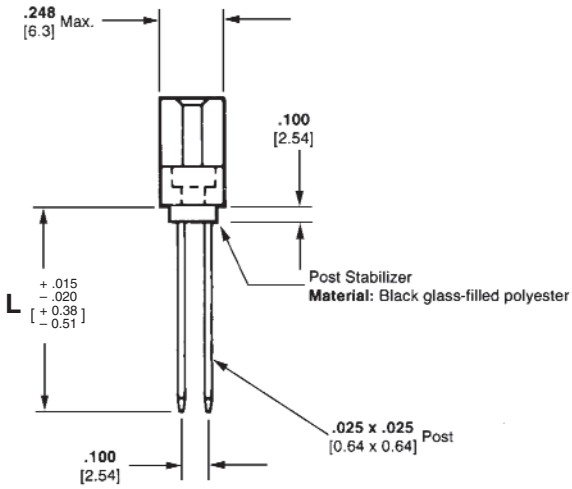

Post Length	No. of Terminals per Post		
	1 High	2 High	3 High
L	.405 10.29	.565 14.35	.725 18.42

Post Wrapping Information

Maximum wire size for wrapping a posted box terminal is 30 AWG [0.05mm²] (maximum insulated wire diameter, .019 [0.49mm]).

The following data can be used to determine bit and sleeve size:

Maximum Terminal Diagonal: .034 [0.87]
Minimum Terminal Diagonal: .031 [0.78]
Maximum Effective Radius: .067 [1.71]

Recommended Sleeve:
No. 507100[1]
Recommended Bits:
No. 511208[1]
No. 507063[1]

[1]Available from Gardner-Denver Co., Grand Haven, Michigan.

Dimensions are shown for reference purposes only. Specifications subject to change.

Dimensions are in millimeters unless otherwise specified.

USA: +1 800 522 6752
Asia Pacific: +86 0 400 820 6015
UK: +44 800 267 666

For additional support numbers please visit www.te.com

2-Row Receptacle Assemblies for Rack Mounting with Posted Contacts (Wrap-Type) — MIL-C-55302 Qualified (Continued)

Commercial Receptacle Assemblies

Housing Material — In accordance with MIL-C-55302 or MIL-M-24519 Type GLCP-30F

[1] **Contact Material and Finish** — Beryllium copper or copper nickel silicon per ASTM B422 and ASTM B888 plated .000030 [0.00076] gold in the contact area, .000100 [0.00254] tin-lead on the tails over .000030 [0.00076] nickel on the entire contact

[2] **Contact Material and Finish** — Same as above except for tin on the tails

No. of Pos.	Dimensions			No. of Terminations Per Post			
	A	B	C	1 High Part No.[1]	2 High Part No.[1]	3 High Part No.[1]	3 High RoHS Part No.[2]
140	**7.855** 199.52	**7.565** 192.15	**6.900** 175.26	—*	—*	—*	—
134	**7.555** 191.50	**7.265** 184.53	**6.600** 167.64	—*	—*	—*	—
130	**7.355** 186.82	**7.065** 179.45	**6.400** 162.56	—*	—*	—*	—
120	**6.855** 174.12	**6.565** 166.75	**5.900** 149.86	—*	—*	—*	—
110	**6.355** 161.42	**6.065** 154.05	**5.400** 137.16	—*	—*	531838-9	—
100	**5.855** 148.72	**5.565** 141.35	**4.900** 124.46	—*	531837-8	531838-8	5-531838-8
90	**5.355** 136.02	**5.065** 128.65	**4.400** 111.76	531836-7	—*	—*	—
80	**4.855** 123.32	**4.565** 115.95	**3.900** 99.06	—*	—*	531838-6	5-531838-6
70	**4.355** 110.62	**4.065** 103.25	**3.400** 86.36	—*	—*	—*	—
60	**3.855** 97.92	**3.565** 90.55	**2.900** 73.66	—*	—*	—*	—
50	**3.355** 85.22	**3.065** 77.85	**2.400** 60.96	531836-3	—*	531838-3	5-531838-3
40	**2.855** 72.52	**2.565** 65.15	**1.900** 48.26	—*	—*	—*	—
30	**2.355** 59.82	**2.065** 52.45	**1.400** 35.56	—*	—*	—*	—

* Part Numbers available upon request, contact TE Connectivity.

Military Receptacle Assemblies

Housing Material — In accordance with MIL-C-55302 or MIL-M-24519 Type GLCP-30F

Contact Material and Finish — Beryllium copper or copper nickel silicon per ASTM B422 and ASTM B888 plated .000050 [0.00127] gold over .000030 [0.00076] nickel on the entire contact

No. of Pos.	Dimensions			No. of Terminations Per Post					
				1 High		2 High		3 High	
	A	B	C	MIL-Part No.	AMP Part No.	MIL-Part No.	AMP Part No.	MIL-Part No.	AMP Part No.
140	**7.855** 199.52	**7.565** 192.15	**6.900** 175.26	M55302/27-213	—	M55302/27-209	1-530777-3	M55302/27-205	1-530763-3
134	**7.555** 191.50	**7.265** 184.53	**6.600** 167.64	M55302/27-212	1-530778-2	M55302/27-208	1-530777-2	M55302/27-204	1-530763-2
130	**7.355** 186.82	**7.065** 179.45	**6.400** 162.56	M55302/27-211	1-530778-1	M55302/27-207	1-530777-1	M55302/27-203	1-530763-1
120	**6.855** 174.12	**6.565** 166.75	**5.900** 149.86	M55302/27-210	1-530778-0	M55302/27-206	1-530777-0	M55302/27-202	1-530763-0
110	**6.355** 161.42	**6.065** 154.05	**5.400** 137.16	M55302/27-144	530778-9	M55302/27-135	530777-9	M55302/27-126	530763-9
100	**5.855** 148.72	**5.565** 141.35	**4.900** 124.46	M55302/27-143	530778-8	M55302/27-134	530777-8	M55302/27-125	530763-8
90	**5.355** 136.02	**5.065** 128.65	**4.400** 111.76	M55302/27-142	530778-7	M55302/27-133	530777-7	M55302/27-124	530763-7
80	**4.855** 123.32	**4.565** 115.95	**3.900** 99.06	M55302/27-141	530778-6	M55302/27-132	530777-6	M55302/27-123	530763-6
70	**4.355** 110.62	**4.065** 103.25	**3.400** 86.36	M55302/27-140	530778-5	M55302/27-131	530777-5	M55302/27-122	530763-5
60	**3.855** 97.92	**3.565** 90.55	**2.900** 73.66	M55302/27-139	530778-4	M55302/27-130	530777-4	M55302/27-121	530763-4
50	**3.355** 85.22	**3.065** 77.85	**2.400** 60.96	M55302/27-138	530778-3	M55302/27-129	530777-3	M55302/27-120	530763-3
40	**2.855** 72.52	**2.565** 65.15	**1.900** 48.26	M55302/27-137	530778-2	M55302/27-128	530777-2	M55302/27-119	530763-2
30	**2.355** 59.82	**2.065** 52.45	**1.400** 35.56	M55302/27-136	530778-1	M55302/27-127	530777-1	M55302/27-118	530763-1

Catalog 1308940
Revised 9-14

www.te.com

Dimensions are shown for reference purposes only. Specifications subject to change.

Dimensions are in millimeters unless otherwise specified.

USA: +1 800 522 6752
Asia Pacific: +86 0 400 820 6015
UK: +44 800 267 666

For additional support numbers please visit www.te.com

2-Row Receptacle Assemblies for PC Solder Mount with Posted Contacts (Wrap-Type) — MIL-C-55302 Qualified

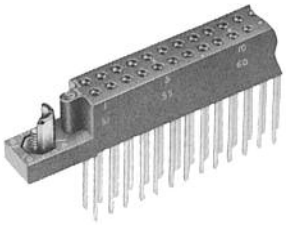

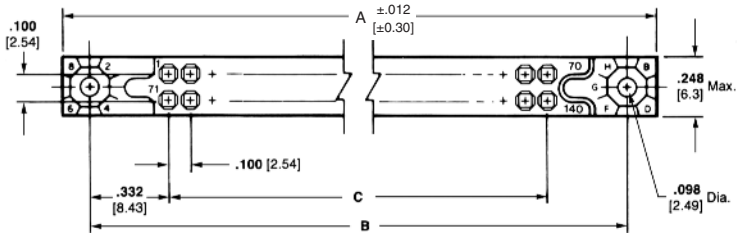

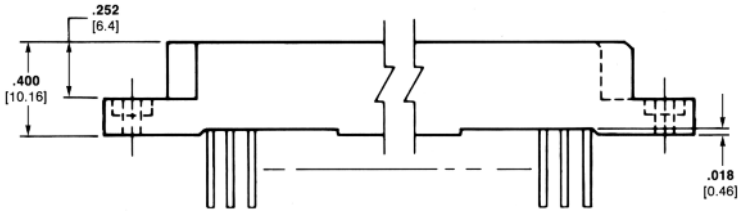

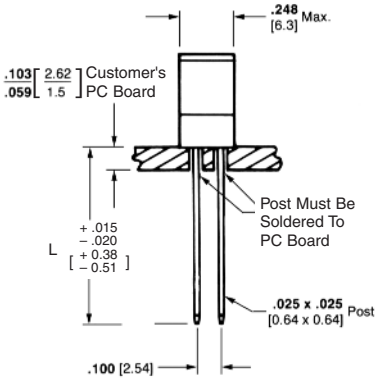

Related Product Data

Mates with — Pin Header Assemblies, pages 1-56 to 1-60

External Keying — page 1-80

Post Wrapping Information — page 1-51

Recommended PC Board Layout — page 1-74

Military Receptacle Assemblies

Housing Material — In accordance with MIL-C-55302 or MIL-M-24519 Type GLCP-30F

Contact Material and Finish — Beryllium copper or copper nickel silicon per ASTM B422 and ASTM B888 plated .000050 [0.00127] gold over .000030 [0.00076] nickel on the entire contact.

No. of Pos.	Dimensions			No. of Terminations Per Post					
				1 High		2 High		3 High	
	A	B	C	MIL-Part No.	AMP Part No.	MIL-Part No.	AMP Part No.	MIL-Part No.	AMP Part No.
140	**7.855** 199.52	**7.565** 192.15	**6.900** 175.26	M55302/27-225	—	M55302/27-221	1-530780-3	M55302/27-217	1-530779-3
134	**7.555** 191.90	**7.265** 184.53	**6.600** 167.64	M55302/27-224	—	M55302/27-220	1-530780-2	M55302/27-216	1-530779-2
130	**7.355** 186.82	**7.065** 179.45	**6.400** 162.56	M55302/27-223	1-530781-1	M55302/27-219	1-530780-1	M55302/27-215	1-530779-1
120	**6.855** 174.12	**6.565** 166.75	**5.900** 149.86	M55302/27-222	—	M55302/27-218	1-530780-0	M55302/27-214	1-530779-0
110	**6.355** 161.42	**6.065** 154.05	**5.400** 137.16	M55302/27-171	530781-9	M55302/27-162	530780-9	M55302/27-153	530779-9
100	**5.855** 148.72	**5.565** 141.35	**4.900** 124.46	M55302/27-170	530781-8	M55302/27-161	530780-8	M55302/27-152	530779-8
90	**5.355** 136.02	**5.065** 128.65	**4.400** 111.76	M55302/27-169	530781-7	M55302/27-160	530780-7	M55302/27-151	530779-7
80	**4.855** 123.32	**4.565** 115.95	**3.900** 99.06	M55302/27-168	530781-6	M55302/27-159	530780-6	M55302/27-150	530779-6
70	**4.355** 110.62	**4.065** 103.25	**3.400** 86.36	M55302/27-167	530781-5	M55302/27-158	530780-5	M55302/27-149	530779-5
60	**3.855** 97.92	**3.565** 90.55	**2.900** 73.66	M55302/27-166	—	M55302/27-157	530780-4	M55302/27-148	530779-4
50	**3.355** 85.22	**3.065** 77.85	**2.400** 60.96	M55302/27-165	530781-3	M55302/27-156	530780-3	M55302/27-147	530779-3
40	**2.855** 72.52	**2.565** 65.15	**1.900** 48.26	M55302/27-164	530781-2	M55302/27-155	530780-2	M55302/27-146	530779-2
30	**2.355** 59.82	**2.065** 52.45	**1.400** 35.56	M55302/27-163	530781-1	M55302/27-154	530780-1	M55302/27-145	530779-1

Dimensions are shown for reference purposes only. Specifications subject to change.

Dimensions are in millimeters unless otherwise specified.

USA: +1 800 522 6752
Asia Pacific: +86 0 400 820 6015
UK: +44 800 267 666

For additional support numbers please visit www.te.com

2-Row Right-Angle Receptacle Assemblies with Posted Contacts (Wrap-Type)

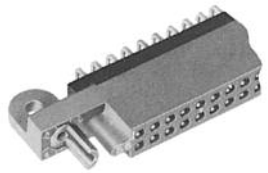

Related Product Data

Housing Material — In accordance with MIL-C-55302 or MIL-M-24519 Type GLCP-30F

[1] **Contact Material and Finish** — Beryllium copper or copper nickel silicon per ASTM B422 and ASTM B888 plated .000030 [0.00076] gold in the contact area, .000100 [0.00254] tin-lead on posts over .000030 [0.00076] nickel on the entire contact

[2] **Contact Material and Finish** — Same as above except for tin on posts

Mates with — Pin Header Assemblies, pages 1-56 to 1-60

External Keying — page 1-80

Recommended PC Board Layout — page 1-74

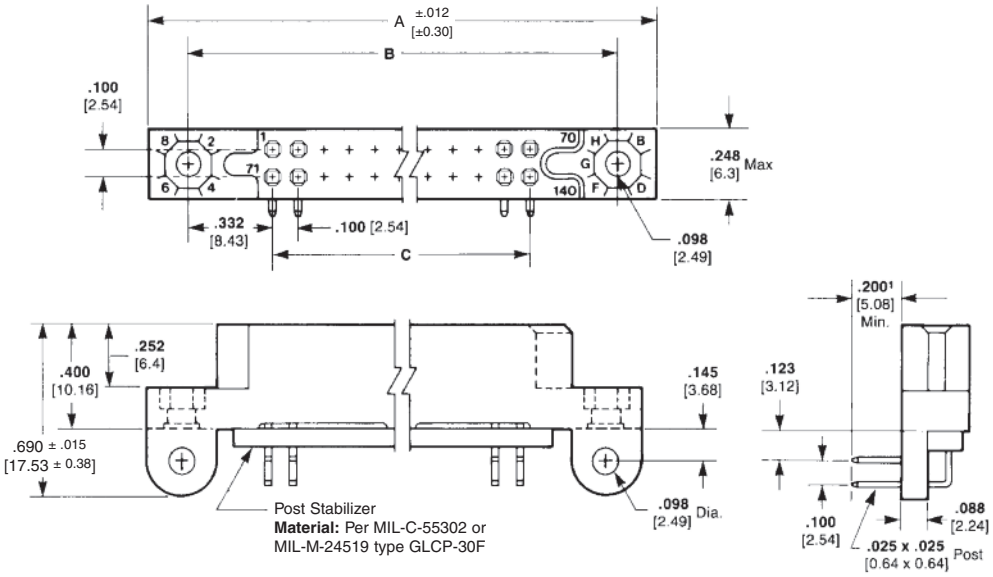

[1]The rows of posts will not be of equal length.

No. of Pos.	Dimensions A	Dimensions B	Dimensions C	Part No.[1]	RoHS Part No.[2]
140	**7.855** 199.52	**7.565** 192.15	**6.900** 175.26	—	—
134	**7.555** 191.50	**7.265** 184.53	**6.600** 167.64	—	—
130	**7.355** 186.82	**7.065** 179.45	**6.400** 162.56	—	—
120	**6.855** 174.12	**6.565** 166.75	**5.900** 149.86	532469-4	—
110	**6.355** 161.42	**6.065** 154.05	**5.400** 137.16	1-532469-0	—
100	**5.855** 148.72	**5.565** 141.35	**4.900** 124.46	532469-9	5-532469-9
90	**5.355** 136.02	**5.065** 128.65	**4.400** 111.76	532469-3	5-532469-3
80	**4.855** 123.32	**4.565** 115.95	**3.900** 99.06	—	—
70	**4.355** 110.62	**4.065** 103.25	**3.400** 86.36	—	—
60	**3.855** 97.92	**3.565** 90.55	**2.900** 73.66	532469-2	—
50	**3.355** 85.22	**3.065** 77.85	**2.400** 60.96	—	—
40	**2.855** 72.52	**2.565** 65.15	**1.900** 48.26	532469-6	—
30	**2.355** 59.82	**2.065** 52.45	**1.400** 35.56	532469-5	—

Dimensions are shown for reference purposes only. Specifications subject to change.

Dimensions are in millimeters unless otherwise specified.

USA: +1 800 522 6752
Asia Pacific: +86 0 400 820 6015
UK: +44 800 267 666

For additional support numbers please visit www.te.com

2-Row Sealed Receptacle Connector

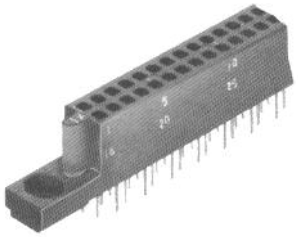

Housing Material — Per MIL-C-55302 or MIL-M-24519 type GLCP-30F

Contact Material and Finish — Beryllium copper or copper nickel silicon per ASTM B422 and ASTM B888 plated .000050 [0.00127] gold in the contact area, .000100 [0.00254] tin-lead on the solder tails over .000030 [0.00076] nickel on the entire contact

Related Product Data

Mates with — Pin Header Assemblies, pages 1-56 to 1-60

External Keying — page 1-80

Mating Sealed Pin Header Assembly — Part Number 532795

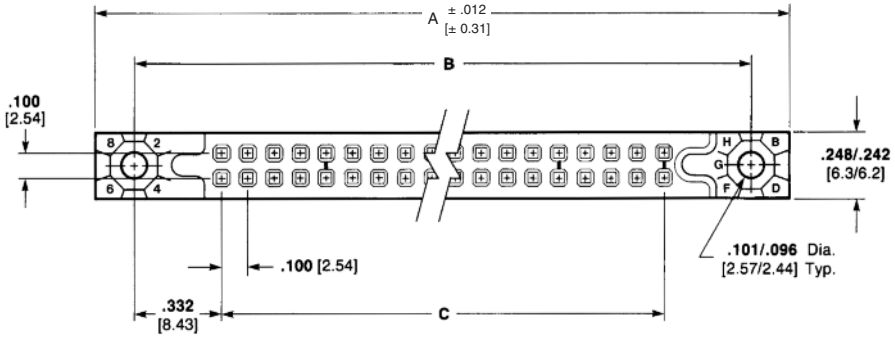

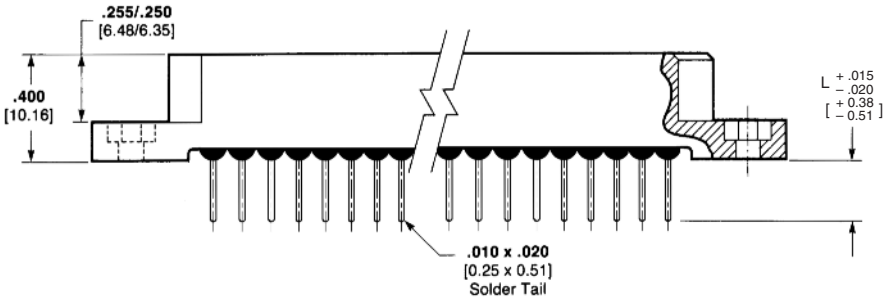

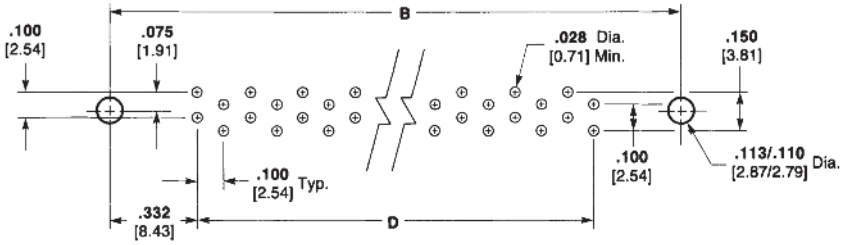

Recommended PC Board Layout

No. of Pos.	Dimensions A	Dimensions B	Dimensions C	Dimensions D	Part Nos. Dim. L .156 [3.96]	Part Nos. Dim. L .235 [5.97]
140	**7.855** 199.52	**7.565** 192.15	**7.165** 181.99	**6.900** 175.26	—*	—*
134	**7.555** 191.90	**7.265** 184.53	**6.865** 174.37	**6.600** 167.64	—*	—*
130	**7.355** 186.82	**7.065** 179.45	**6.555** 166.50	**6.400** 162.56	—*	—*
120	**6.855** 174.12	**6.565** 166.75	**6.165** 156.59	**5.906** 149.86	—*	—*
110	**6.355** 161.42	**6.065** 154.05	**5.655** 143.64	**5.400** 137.16	534195-9	534650-9
100	**5.855** 148.72	**5.565** 141.35	**5.165** 131.19	**4.900** 124.46	—*	—*
90	**5.355** 136.02	**5.065** 128.65	**4.655** 118.24	**4.400** 111.76	534195-7	—*
80	**4.855** 123.32	**4.565** 115.95	**4.165** 105.79	**3.900** 99.06	534195-6	—*
70	**4.355** 110.62	**4.065** 103.25	**3.655** 92.84	**3.400** 86.36	534195-5	—*
60	**3.855** 97.92	**3.565** 90.55	**3.165** 80.39	**2.900** 73.66	534195-4	—*
50	**3.355** 85.22	**3.065** 77.85	**2.655** 67.44	**2.400** 60.96	534195-3	—*
40	**2.855** 72.52	**2.565** 65.15	**2.165** 54.99	**1.900** 48.26	534195-2	—*
30	**2.355** 59.82	**2.065** 52.45	**1.665** 42.29	**1.400** 35.56	534195-1	—*

* Part Numbers available upon request, contact TE Connectivity.

Dimensions are shown for reference purposes only. Specifications subject to change.

Dimensions are in millimeters unless otherwise specified.

USA: +1 800 522 6752
Asia Pacific: +86 0 400 820 6015
UK: +44 800 267 666

For additional support numbers please visit www.te.com

2-Row Straddle Mount Pin Header Assemblies with Anodized Pin Protectors — MIL-C-55302 Qualified

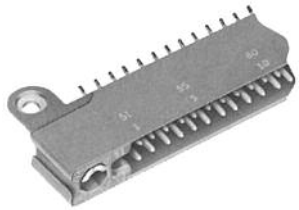

Commercial Pin Header Assembly

Housing Material — In accordance with MIL-C-55302 or MIL-M-24519 type GLCP-30F

Pin Protector Material — Anodized aluminum per QQ-A-250/1

Contact Material and Finish — Brass per QQ-B-626 plated .000030 [0.00076] gold in the contact area, .000100 [0.00254] tin-lead on the tabs over .000050 [0.00127] nickel on the entire contact

Military Pin Header Assembly

Housing Material — In accordance with MIL-C-55302 or MIL-M-24519 type GLCP-30F

Pin Protector Material — Anodized aluminum per QQ-A-250/1

Contact Material and Finish — Brass per QQ-B-626 plated .000050 [0.00127] gold in the contact area, .000100 [0.00254] tin-lead on the tabs over .000050 [0.00127] nickel on the entire contact

Related Product Data

Mates with — Receptacles, pages 1-49 to 1-54, 1-61 and 1-62

External Keying — page 1-80

Recommended PC Board Layout — page 1-75

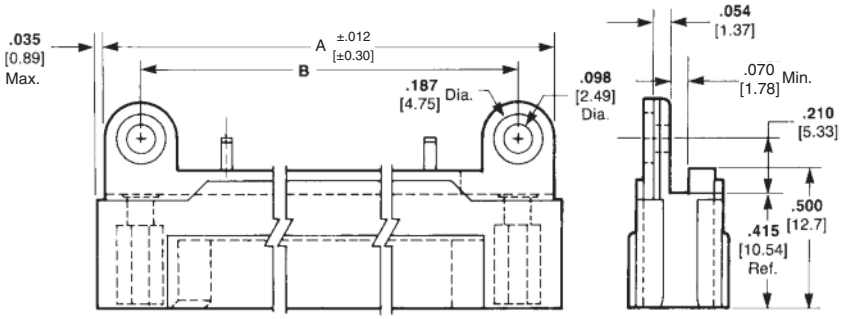

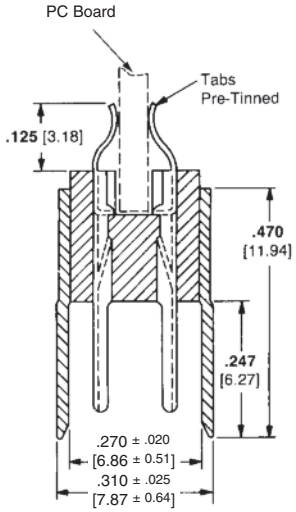

Edge Mount

No. of Pos.	Dimensions A	Dimensions B	Dimensions C	Commercial Part No.	Military MIL Part No.	AMP Part No.
140	**7.855** 199.52	**7.565** 192.15	**6.900** 175.26	—	M55302/26-22	1-530761-5
134	**7.555** 191.50	**7.265** 184.53	**6.600** 167.64	—	M55302/26-21	530761-3
130	**7.355** 186.82	**7.065** 179.45	**6.400** 162.56	—	M55302/26-20	1-530761-4
120	**6.855** 174.12	**6.565** 166.75	**5.900** 149.86	—	M55302/26-19	1-530761-3
110	**6.355** 161.42	**6.065** 154.05	**5.400** 137.16	—	M55302/26-18	530761-5
100	**5.855** 148.72	**5.565** 141.35	**4.900** 124.46	531842-8	M55302/26-17	530761-6
90	**5.355** 136.02	**5.065** 128.65	**4.400** 111.76	531842-7	M55302/26-16	530761-7
80	**4.855** 123.32	**4.565** 115.95	**3.900** 99.06	531842-6	M55302/26-15	530761-4
70	**4.355** 110.62	**4.065** 103.25	**3.400** 86.36	—	M55302/26-14	530761-8
60	**3.855** 97.92	**3.565** 90.55	**2.900** 73.66	531842-4	M55302/26-13	530761-9
50	**3.355** 85.22	**3.065** 77.85	**2.400** 60.96	531842-3	M55302/26-12	1-530761-0
40	**2.855** 72.52	**2.565** 65.15	**1.900** 48.26	—	M55302/26-11	1-530761-1
30	**2.355** 59.82	**2.065** 52.45	**1.400** 35.56	—	M55302/26-10	1-530761-2

Dimensions are shown for reference purposes only. Specifications subject to change.

Dimensions are in millimeters unless otherwise specified.

USA: +1 800 522 6752
Asia Pacific: +86 0 400 820 6015
UK: +44 800 267 666

For additional support numbers please visit www.te.com

2-Row Right-Angle Pin Header Assemblies for Flow Soldering — MIL-C-55302 Qualified

Commercial Pin Header

[1] Contact Material and Finish — Brass per QQ-B-626 plated .000030 [0.00076] gold in the contact area, .000100 [0.00254] tin-lead on the tails over .000050 [0.00127] nickel on the entire contact

[2] Contact Material and Finish — Same as above except for tin on the tails

Housing Material — In accordance with MIL-C-55302 or MIL-M-24519 type GLCP-30F

Military Pin Header

Contact Material and Finish — Brass per QQ-B-626 plated .000050 [0.00127] gold in the contact area, .000100 [0.00254] tin-lead on the tails over .000050 [0.00127] nickel on the entire contact

Housing Material — In accordance with MIL-C-55302 or MIL-M-24519 type GLCP-30F

Related Product Data

Mates with — Receptacles, pages 1-49 to 1-54, 1-61 and 1-62

External Keying — page 1-80

Recommended PC Board Layout — page 1-75

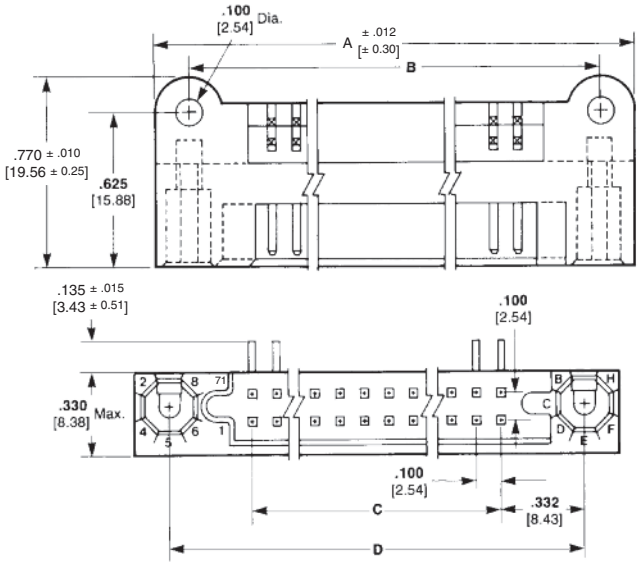

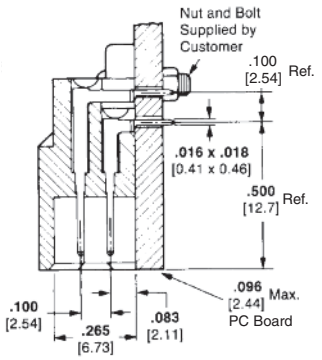

Standard Housing

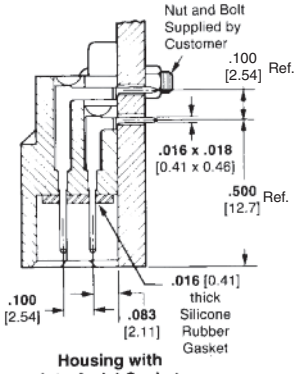

Housing with Interfacial Gasket

No. of Pos.	Dimensions				Standard Housing			Housing with Interfacial Gasket	
	A	B	C	D	Commercial Part No.	MIL Part No. M55302/	AMP Part No.	MIL Part No. M55302/	AMP Part No.
140	**7.855** 199.52	**7.565** 192.15	**6.900** 175.26	**7.565** 192.15	—	110-31	1-531721-3	110-35	1-531722-3
134	**7.555** 191.50	**7.265** 184.53	**6.600** 167.64	**7.265** 184.53	1-530942-2[1] 6-530942-2[2]	110-30	1-531721-2	110-34	1-531722-2
130	**7.355** 186.82	**7.065** 179.45	**6.400** 162.56	**7.065** 179.45	—	110-29	1-531721-1	110-33	1-531722-1
120	**6.855** 174.12	**6.565** 166.75	**5.900** 149.86	**6.565** 166.75	—	110-28	1-531721-0	110-32	1-531722-0
110	**6.355** 161.42	**6.065** 154.05	**5.400** 137.16	**6.065** 154.05	530942-9[1]	110-18	531721-9	110-27	531722-9
100	**5.855** 148.72	**5.565** 141.35	**4.900** 124.46	**5.565** 141.35	530942-8[1] 5-530942-8[2]	110-17	531721-8	110-26	531722-8
90	**5.355** 136.02	**5.065** 128.65	**4.400** 111.76	**5.065** 128.65	530942-7[1]	110-16	531721-7	110-25	531722-7
80	**4.855** 123.32	**4.565** 115.95	**3.900** 99.06	**4.565** 115.95	—	110-15	531721-6	110-24	531722-6
70	**4.355** 110.62	**4.065** 103.25	**3.400** 86.36	**4.065** 103.25	530942-5[1] 5-530942-5[2]	110-14	531721-5	110-23	531722-5
60	**3.855** 97.92	**3.565** 90.55	**2.900** 73.66	**3.565** 90.55	530942-4[1] 5-530942-4[2]	110-13	531721-4	110-22	531722-4
50	**3.355** 85.22	**3.065** 77.85	**2.400** 60.96	**3.065** 77.85	530942-3[1]	110-12	531721-3	110-21	531722-3
40	**2.855** 72.52	**2.565** 65.15	**1.900** 48.26	**2.565** 65.15	530942-2[1]	110-11	531721-2	110-20	531722-2
30	**2.355** 59.82	**2.065** 52.45	**1.400** 35.56	**2.065** 52.45	—	110-10	531721-1	110-19	531722-1

[1]See Material and Finish above. [2]See Material and Finish for RoHS Part Numbers above.

Catalog 1308940
Revised 9-14

www.te.com

Dimensions are shown for reference purposes only. Specifications subject to change.

Dimensions are in millimeters unless otherwise specified.

USA: +1 800 522 6752
Asia Pacific: +86 0 400 820 6015
UK: +44 800 267 666

For additional support numbers please visit www.te.com

2-Row Right-Angle Pin Header Assemblies with Posted Contacts (Wrap-Type)

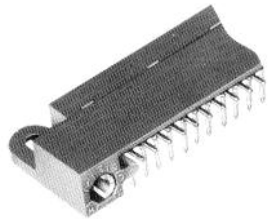

Related Product Data

Housing Material — In accordance with MIL-C-55302 or MIL-M-24519 type GLCP-30F

Contact Material and Finish — Phosphor bronze plated .000050 [0.00127] gold over .000030 [0.00076] nickel on the entire contact

Mates with — Receptacles, pages 1-49 to 1-54, 1-61 and 1-62

External Keying — page 1-80

Recommended PC Board Layout — page 1-75

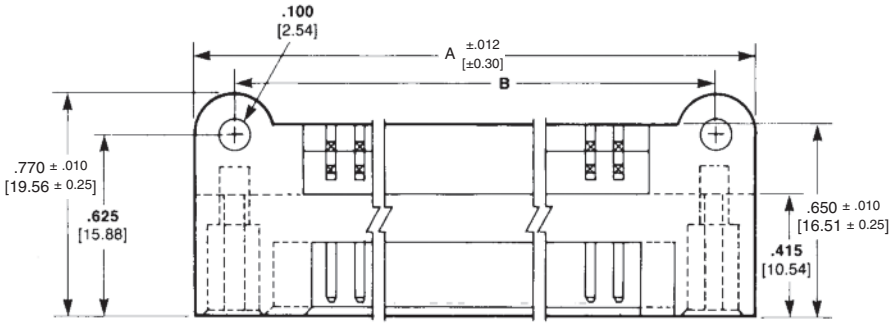

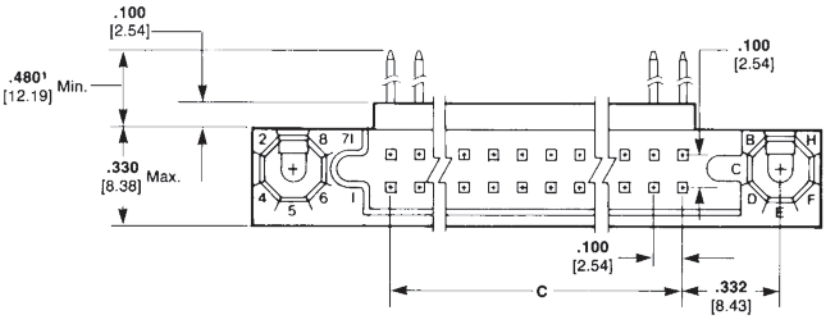

¹The two rows of posts will not be of equal length.

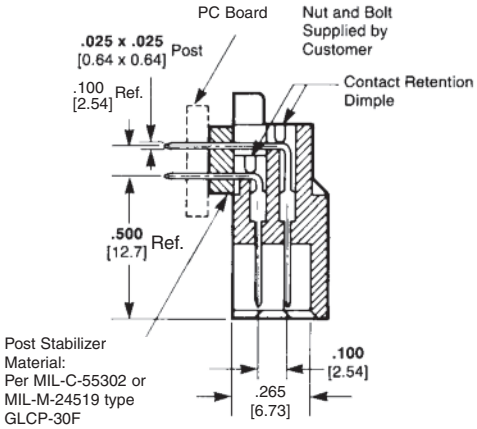

No. of Pos.	Dimensions A	Dimensions B	Dimensions C	AMP Part No.
110	**6.355** 161.42	**6.065** 154.05	**5.400** 137.16	532488-9
90	**5.355** 136.02	**5.065** 128.65	**4.400** 111.76	532488-7
80	**4.855** 123.32	**4.565** 115.95	**3.900** 99.06	—
70	**4.355** 110.62	**4.065** 103.25	**3.400** 86.36	—
30	**2.355** 59.82	**2.065** 52.45	**1.400** 35.56	532488-1

Dimensions are shown for reference purposes only. Specifications subject to change.

Dimensions are in millimeters unless otherwise specified.

USA: +1 800 522 6752
Asia Pacific: +86 0 400 820 6015
UK: +44 800 267 666

For additional support numbers please visit www.te.com

2-Row Pin Housing and Assemblies for Crimp Contacts — MIL-C-55302 Qualified

Housing Assembly
(includes turnable jackscrews)

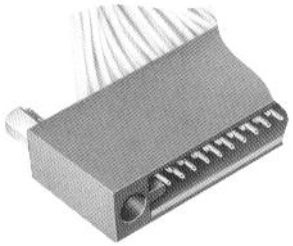

Housing Material — In accordance with MIL-C-55302 or MIL-M-24519 type GLCP-30F

Jackscrew Material — Passivated stainless steel

Related Product Data

Mates with — Receptacle assemblies, pages 1-49 to 1-54, and receptacle housings, pages 1-61 and 1-62

Crimp Type Pin Contact

Material — Brass

Finish — .000050 [0.00127] gold over .000050 [0.00127] nickel

Wire Range — 26-22 AWG [0.12-0.4mm²]

Ins. Dia. Range — .036-.054 [0.91-1.37]

Extraction Tool —
Part Number 91156-1

Loose Piece
Military Part Number M55302/113-05
AMP Part Number 530750-5

Strip Form
Military Part Number M55302/113-06
AMP Part Number 530750-4

Tooling

Hand Tool No. 90346-1 is used to apply the loose piece contacts (Hand tool instruction sheet 408-7820). For the application of strip contacts use the AMP-O-LECTRIC Machine with the applicator No. 466625-3. Other automated machines are available, consult TE Connectivity for specifications.

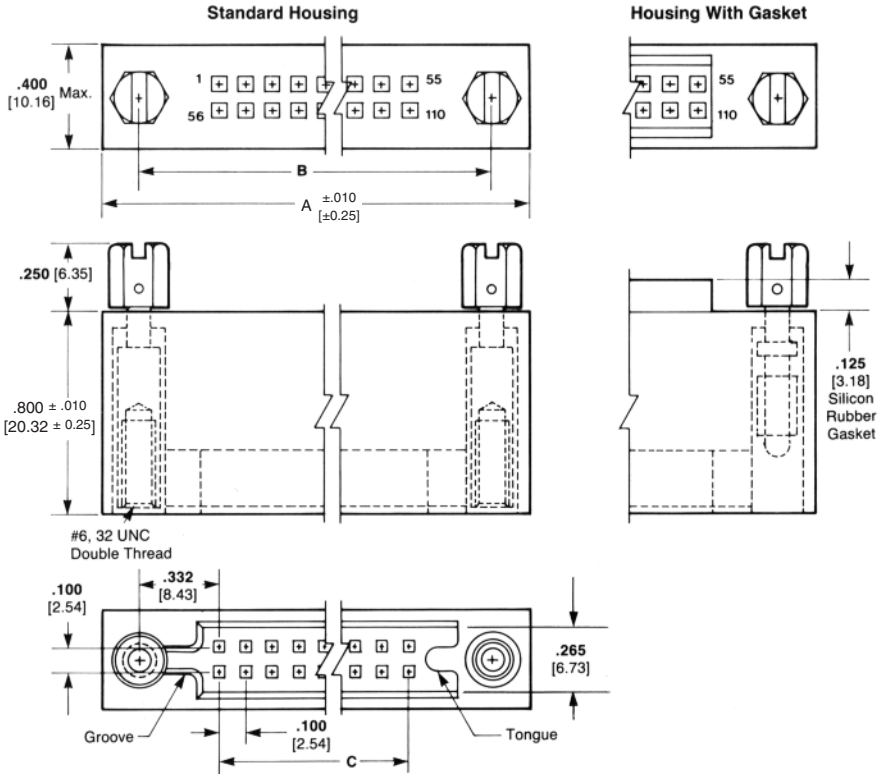

Turnable Jackscrews

Material — Passivated stainless steel

Note: To be used as replacement jackscrew for the pin housing assemblies shown above. They are not compatible with any other pin header assemblies.

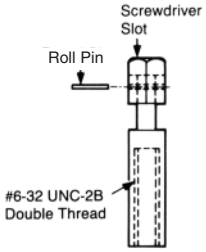

Female
Military Part No. M55302/113-11
AMP Part No. 530754-2

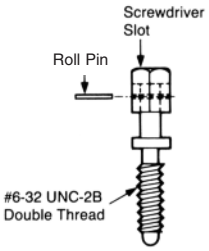

Male
Military Part No. M55302/113-12
AMP Part No. 530754-1

Fixed Jackscrews

Material — Passivated stainless steel

Note: To be used with receptacle assemblies shown on pages 1-49 to 1-54 for mating with pin assemblies shown above.

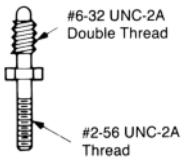

Male
Military Part No. M55302/113-14
AMP Part No. 531141-3
(Nut supplied by customer)

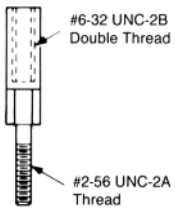

Female
Military Part No. M55302/113-13
AMP Part No. 531141-4
(Nut supplied by customer)

Catalog 1308940
Revised 9-14

www.te.com

Dimensions are shown for reference purposes only. Specifications subject to change.

Dimensions are in millimeters unless otherwise specified.

USA: +1 800 522 6752
Asia Pacific: +86 0 400 820 6015
UK: +44 800 267 666

For additional support numbers please visit www.te.com

2-Row Pin Housing and Assemblies for Crimp Contacts — MIL-C-55302 Qualified (Continued)

Standard Housing

No. of Pos.	Dimensions A	Dimensions B	Dimensions C	Housing Part Nos. Military Part No. M55302/	Housing Part Nos. AMP Part No.	Turnable Jackscrew Combinations Tongue End	Turnable Jackscrew Combinations Groove End	Housing Assembly Part Nos.[1] Military Part No. M55302/	Housing Assembly Part Nos.[1] AMP Part No.	Kit Part Nos.[2] Military Part No. M55302/	Kit Part Nos.[2] AMP Part No.
110	**6.355** 161.42	**6.065** 154.05	**5.400** 137.16	113-23	1-530753-8	Female	Female	113-84	3-530752-3	113-80	530755-5
						Male	Female	113-85	3-530752-4	113-81	530755-6
						Female	Male	113-86	3-530752-5	113-82	530755-7
						Male	Male	113-87	3-530752-6	113-83	530755-8
100	**5.855** 148.72	**5.565** 141.35	**4.900** 124.46	113-22	1-530753-6	Female	Female	113-76	2-530752-9	113-72	3-530755-3
						Male	Female	113-77	3-530752-0	113-73	3-530755-4
						Female	Male	113-78	3-530752-1	113-74	3-530755-5
						Male	Male	113-79	3-530752-2	113-75	3-530755-6
90	**5.355** 136.02	**5.065** 128.65	**4.400** 111.76	113-21	1-530753-4	Female	Female	113-68	2-530752-5	113-64	2-530755-9
						Male	Female	113-69	2-530752-6	113-65	3-530755-0
						Female	Male	113-70	2-530752-7	113-66	3-530755-1
						Male	Male	113-71	2-530752-8	113-67	3-530755-2
80	**4.855** 123.32	**4.565** 115.95	**3.900** 99.06	113-20	1-530753-2	Female	Female	113-60	2-530752-1	113-56	2-530755-5
						Male	Female	113-61	2-530752-2	113-57	2-530755-6
						Female	Male	113-62	2-530752-3	113-58	2-530755-7
						Male	Male	113-63	2-530752-4	113-59	2-530755-8
70	**4.355** 110.62	**4.065** 103.25	**3.400** 86.36	113-19	530753-2	Female	Female	113-07	530752-1	113-01	530755-1
						Male	Female	113-08	530752-2	113-02	530755-2
						Female	Male	113-09	530752-3	113-03	530755-3
						Male	Male	113-10	530752-4	113-04	530755-4
60	**3.855** 97.92	**3.565** 90.55	**2.900** 73.66	113-18	1-530753-0	Female	Female	113-52	1-530752-7	113-48	2-530755-1
						Male	Female	113-53	1-530752-8	113-49	2-530755-2
						Female	Male	113-54	1-530752-9	113-50	2-530755-3
						Male	Male	113-55	2-530752-0	113-51	2-530755-4
50	**3.355** 85.22	**3.065** 77.85	**2.400** 60.06	113-17	530753-8	Female	Female	113-44	1-530752-3	113-40	1-530755-7
						Male	Female	113-45	1-530752-4	113-41	1-530755-8
						Female	Male	113-46	1-530752-5	113-42	1-530755-9
						Male	Male	113-47	1-530752-6	113-43	2-530755-0
40	**2.855** 72.52	**2.565** 65.15	**1.900** 48.26	113-16	530753-6	Female	Female	113-36	530752-9	113-32	1-530755-3
						Male	Female	113-37	1-530752-0	113-33	1-530755-4
						Female	Male	113-38	1-530752-1	113-34	1-530755-5
						Male	Male	113-39	1-530752-2	113-35	1-530755-6
30	**2.355** 59.82	**2.065** 52.45	**1.400** 35.56	113-15	530753-4	Female	Female	113-28	530752-5	113-24	530755-9
						Male	Female	113-29	530752-6	113-25	1-530755-0
						Female	Male	113-30	530752-7	113-26	1-530755-1
						Male	Male	113-31	530752-8	113-27	1-530755-2

Housing with Gasket

No. of Pos.	Dimensions A	Dimensions B	Dimensions C	Housing Part Nos. Military Part No. M55302/	Housing Part Nos. AMP Part No.	Turnable Jackscrew Combinations Tongue End	Turnable Jackscrew Combinations Groove End	Housing Assembly Part Nos.[1] Military Part No. M55302/	Housing Assembly Part Nos.[1] AMP Part No.	Kit Part Nos.[2] Military Part No. M55302/	Kit Part Nos.[2] AMP Part No.
110	**6.355** 161.42	**6.065** 154.05	**5.400** 137.16	113-89	530884-2	Female	Female	113-94	530885-5	113-102	530886-5
						Male	Female	113-95	530885-6	113-103	530886-6
						Female	Male	113-96	530885-7	113-104	530886-7
						Male	Male	113-97	530885-8	113-105	530886-8
70	**4.355** 110.62	**4.065** 103.25	**3.400** 86.36	113-88	530884-1	Female	Female	113-90	530885-1	113-98	530886-1
						Male	Female	113-91	530885-2	113-99	530886-2
						Female	Male	113-92	530885-3	113-100	530886-3
						Male	Male	113-93	530885-4	113-101	530886-4

[1]Each Housing Assembly contains: A. 1 Housing. B. 2 Turnable Jackscrews installed (four combinations available, see table).
[2]Each Kit contains: A. 1 Housing Assembly with 2 Turnable Jackscrews installed (four combinations are available, see table). B. 2 Fixed Jackscrews to mate with Turnable Jackscrews (nuts included). These jackscrews are for installation on the mating receptacle housing. C. Loose Piece Contacts. Quantity is number of positions plus 5 extra.

Pin Housing Assembly with Strain Relief

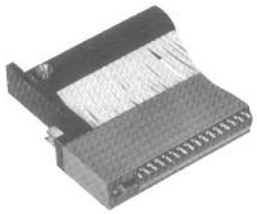

Material

Strain Relief — Black glass-filled nylon

Jackscrews — Passivated stainless steel

Housing — Blue glass-filled polyester

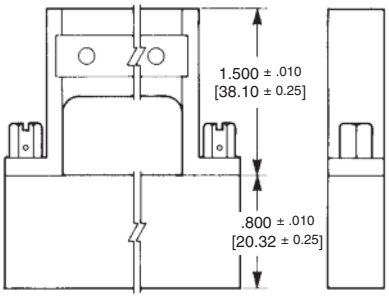

110 Position Housing and Strain Relief Kits

Tongue End	Groove End	Part No.
Female	Female	533194-1
Male	Female	—
Female	Male	—
Male	Male	533194-4

Other sizes can be made available, consult TE Connectivity.

Dimensions are shown for reference purposes only. Specifications subject to change.

Dimensions are in millimeters unless otherwise specified.

USA: +1 800 522 6752
Asia Pacific: +86 0 400 820 6015
UK: +44 800 267 666

For additional support numbers please visit www.te.com

2-Row Receptacle Housing and Assemblies for Crimp Contacts

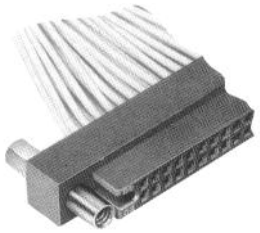

Cable Receptacle with Jackscrews

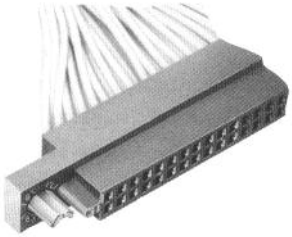

Rack Mount Receptacle with External Keying

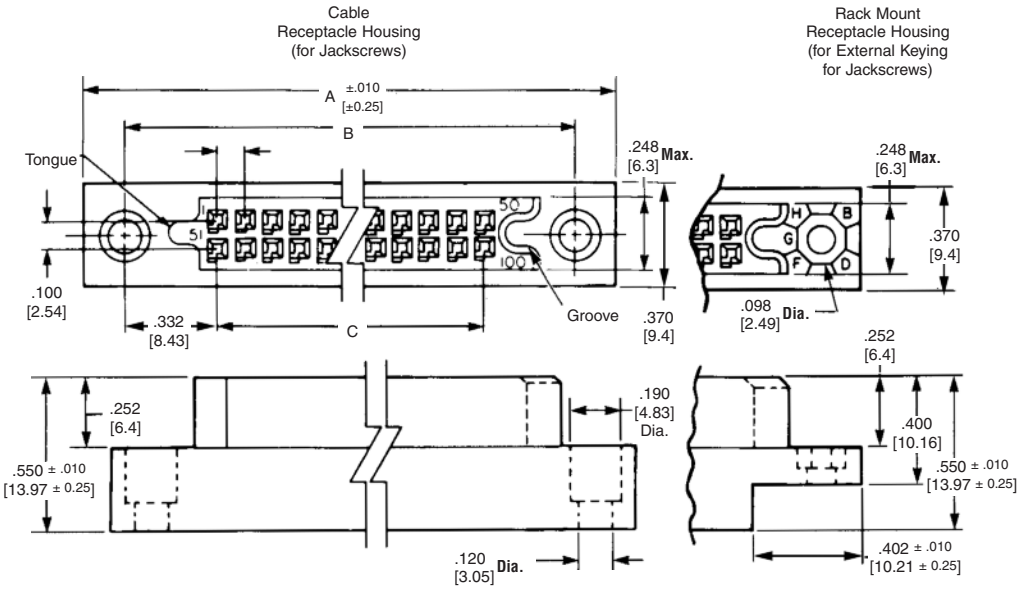

Housing Material — In accordance with MIL-C-55302 or MIL-M-24519 type GLCP-30F

Related Product Data

Mates with — Cable Receptacle Housings mate with Pin Housings on pages 1-56 to 1-60. Rack Mount Receptacle Housings mate with Pin Header Assemblies pages 1-56 to 1-60

External Keying — page 1-80

Turnable Jackscrews

Material — Passivated stainless steel

Note: To be used with the cable receptacle housings shown above. They are not compatible with other receptacle assemblies.

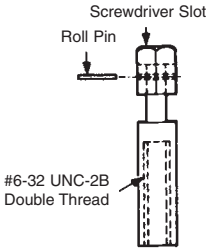

Female
Part Number 530754-4

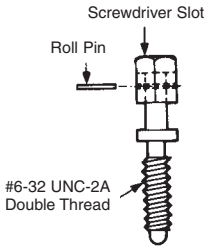

Male
Part Number 530754-3

Fixed Jackscrews

Material — Passivated stainless steel

Note: For use with rack mount receptacles shown above.

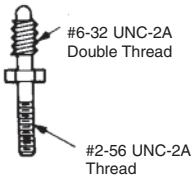

Male
Part Number 532484-1
(Includes nut)

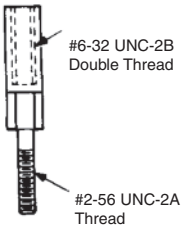

Female
Part Number 532483-2
(Includes nut)

Turnable Jackscrews

Material — Passivated stainless steel

Note: For use with rack mount receptacles shown above.

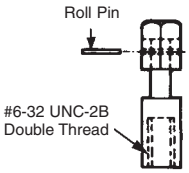

Male
Part Number 531993-2

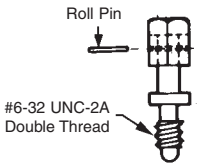

Male
Part Number 531993-1

Fixed Jackscrews

Material — Passivated stainless steel

Note: For use with external key type Right-Angle pin headers when mating with rack mount receptacle housings with turnable jackscrews shown to the left.

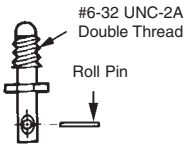

Male
Part Number 531985-2

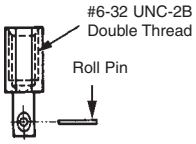

Female
Part Number 531985-1

Dimensions are shown for reference purposes only. Specifications subject to change.

Dimensions are in millimeters unless otherwise specified.

USA: +1 800 522 6752
Asia Pacific: +86 0 400 820 6015
UK: +44 800 267 666

For additional support numbers please visit www.te.com

2-Row Receptacle Housing and Assemblies for Crimp Contacts (Continued)

No. of Pos.	Dimensions A	Dimensions B	Dimensions C	Rack Mount Housing Part No.	Cable Housing Part No.	Jackscrews Combinations[1] Groove End	Jackscrews Combinations[1] Tongue End	Cable Housing with Jackscrews Part No.
110	**6.355** 161.42	**6.065** 154.05	**5.400** 137.16	1-531802-7	1-531840-7	Male	Male	—
						Female	Female	3-531841-3
100	**5.855** 148.72	**5.565** 141.35	**4.900** 124.46	1-531802-5	1-531840-5	Male	Male	—
						Male	Female	—
						Female	Male	3-531841-0
						Female	Female	—
80	**4.855** 123.32	**4.565** 115.95	**3.900** 99.06	—	1-531840-1	Male	Male	—
						Female	Female	2-531841-1
70	**4.355** 110.62	**4.065** 103.25	**3.400** 86.36	531802-9	531840-9	Male	Male	—
						Female	Female	—
60	**3.855** 97.92	**3.565** 90.55	**2.900** 73.66	531802-7	531840-7	Male	Male	—
						Male	Female	—
						Female	Female	—
50	**3.355** 85.22	**3.065** 77.85	**2.400** 60.96	531802-5	531840-5	Male	Male	1-531841-2
						Male	Female	—
						Female	Male	—
						Female	Female	—
40	**2.855** 72.52	**2.565** 65.15	**1.900** 48.26	531802-3	531840-3	Male	Male	—
						Female	Male	—
						Female	Female	—
30	**2.355** 59.82	**2.065** 52.45	**1.400** 35.56	531802-1	531840-1	Male	Male	531841-4
						Male	Female	531841-3
						Female	Male	—

[1]Jackscrews supplied with assemblies 531841 are 530754-4, female, and 530754-3, male, shown on page 1-61.

Crimp Type Receptacle Contacts

Material — Phosphor bronze
Finish — Gold over nickel
(See chart for gold thickness)

Wire Range	Insulation Range	Loose Piece .000030 [0.00076] Gold	Loose Piece .000050 [0.00127] Gold	Strip .000030 [0.00076] Gold	Strip .000050 [0.00127] Gold	Hand Tool	Applicator for AMP-O-LECTRIC Machine	Applicator for Stripper Crimper Machine
26-22 AWG 0.15-0.3mm²	.036-.054 0.91-1.37	531216-2	531216-4	531216-1	531216-3	91540-1	466819-2[2]	466943-1

[2]Use Applicator 466819-1 for the AMPOMATOR Machine.

Note: Instruction sheet for Hand Tool 90301-2 is 408-7909.

Extraction Tool Part Number 91156-2

Dimensions are shown for reference purposes only. Specifications subject to change.

Dimensions are in millimeters unless otherwise specified.

USA: +1 800 522 6752
Asia Pacific: +86 0 400 820 6015
UK: +44 800 267 666

For additional support numbers please visit www.te.com

3-Row Receptacle Housings for Crimp Contacts

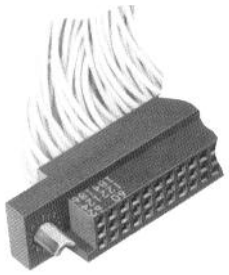

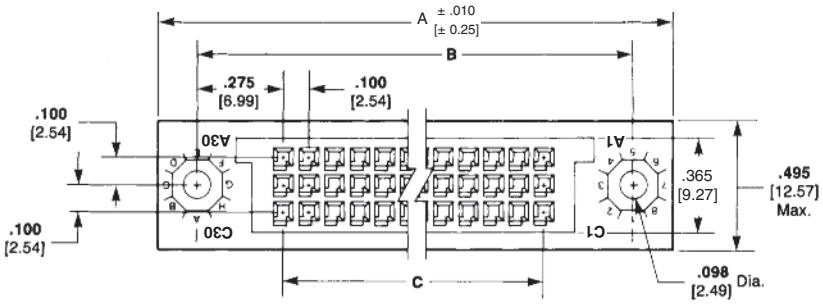

Housing Material — In accordance with MIL-C-55302 or MIL-M-24519 type GLCP-30F

Related Product Data

Mates with — Pin Headers, page 1-66
External Keying — page 1-80

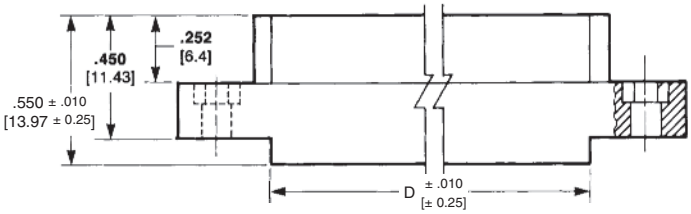

No. of Pos.	Dimensions A	B	C	D	Part No.
165	**6.250** 158.75	**5.950** 151.13	**5.400** 137.16	**5.550** 140.97	1-531984-4
150	**5.750** 146.05	**5.450** 138.43	**4.900** 124.46	**5.050** 128.27	1-531984-3
135	**5.250** 133.35	**4.950** 125.73	**4.400** 111.76	**4.550** 115.57	1-531984-1
126	**4.950** 125.73	**4.650** 118.11	**4.100** 104.14	**4.250** 107.95	531984-8
120	**4.750** 120.65	**4.450** 113.03	**3.900** 99.06	**4.050** 102.87	531984-6
105	**4.250** 107.95	**3.950** 100.33	**3.400** 86.36	**3.550** 90.17	531984-4
90	**3.750** 95.25	**3.450** 87.63	**2.900** 73.66	**3.050** 77.47	531984-1

Crimp Type Receptacle Contact

(Refer to page 1-62 for specifications and part numbers)

Turnable Jackscrews

Material — Passivated stainless steel

Note: For use with receptacle housings shown above when mating with Right-Angle pin headers having fixed jackscrews (531985-1 and 531985-2) shown on page 1-61.

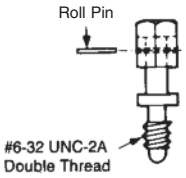

Male
AMP Part Number 532021-1

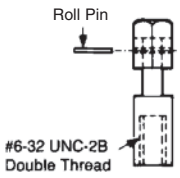

Female
AMP Part Number 532021-2

Dimensions are shown for reference purposes only. Specifications subject to change.

Dimensions are in millimeters unless otherwise specified.

USA: +1 800 522 6752
Asia Pacific: +86 0 400 820 6015
UK: +44 800 267 666

For additional support numbers please visit www.te.com

3-Row Receptacle Assemblies — MIL-C-55302 Qualified

Commercial Receptacle Assemblies

Housing Material — In accordance with MIL-C-55302 or MIL-M-24519 type GLCP-30F

[1] **Contact Material and Finish** — Beryllium copper or copper nickel silicon per ASTM B422 and ASTM B888 Channel Contact and Wrap-Type Posted Contact — Plated .000030 [0.00076] gold in the contact area, .000100 [0.00254] tin-lead on the tails over .000030 [0.00076] nickel on the entire contact; Solder Eyelet — Plated .000030 [0.00076] gold in the contact area, in accordance with MIL-C-55302 tin-lead on the tails over .000030 [0.00076] nickel on the entire contact

[2] **Contact Material and Finish** — Same as above except for tin on the tails

Military Receptacle Assemblies

Housing Material — In accordance with MIL-C-55302 or MIL-M-24519 type GLCP-30F

Contact Material and Finish — Beryllium copper or copper nickel silicon per ASTM B422 and ASTM B888 Channel Contact — Plated .000050 [0.00127] gold in the contact area, .000100 [0.00254] tin-lead on the tails over .000030 [0.00076] nickel on the entire contact; Wrap-Type Posted Contact — Plated .000050 [0.00127] gold over .000030 [0.00076] nickel on the entire contact; Solder Eyelet — Plated .000050 [0.00127] gold in the contact area, in accordance with MIL-C-55302 .000100 [0.00254] tin-lead on the tails over .000050 [0.00127] nickel on the entire contact

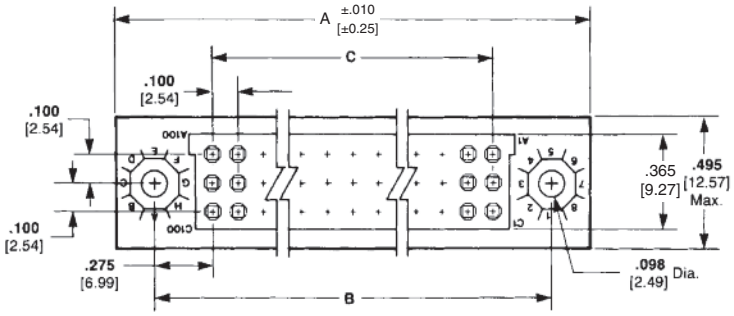

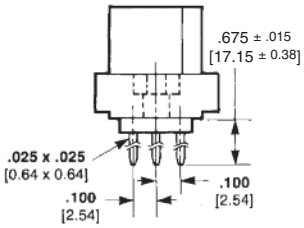

Wrap-Type Posted Contact

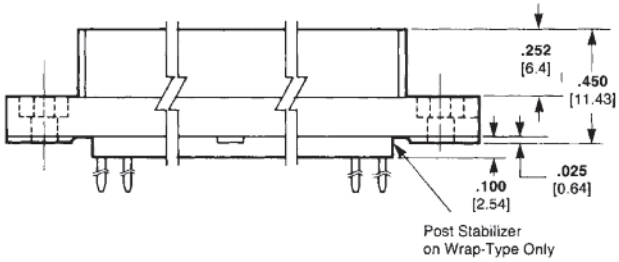

Material: In accordance with MIL-C-55302 or MIL-M-24519 type GLCP-30F

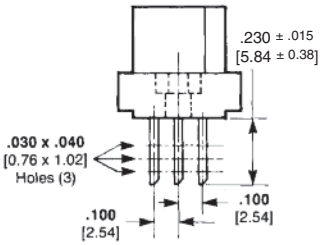

Solder Eyelet Contact

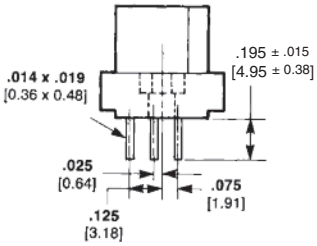

Flow Solder
.014 x .019 [0.36 x 0.48]
Channel Contact—Unsealed
.010 x .020 [0.25 x 0.50]
Posted Contact—Sealed

Related Product Data

Mates with — Pin Headers, page 1-68
External Keying — page 1-80
Recommended PC Board Layout — page 1-76

No. of Pos.	Dimensions A	Dimensions B	Dimensions C	Flow Solder Contacts: Commercial Part No. Sealed	Flow Solder Contacts: Commercial Part No. Unsealed	Flow Solder Contacts: Military M55302/130	Flow Solder Contacts: AMP Part No. Sealed	Flow Solder Contacts: AMP Part No. Unsealed	Solder Eyelet: Commercial Part No.	Solder Eyelet: Military M55302/130	Solder Eyelet: AMP Part No.	Wrap-Type Posted Contact: Commercial Part No.	Wrap-Type Posted Contact: Military M55302/130	Wrap-Type Posted Contact: AMP Part No.
300[3]	**10.750** 273.05	**10.450** 265.43	**9.900** 251.46	—	—	—	—	—	—	—	—	—	—	—
270[3]	**9.750** 247.65	**9.450** 240.03	**8.900** 226.06	—	—	—	—	—	—	—	—	—	—	—
240	**8.750** 222.25	**8.450** 214.63	**7.900** 200.66	—	531138-8[1]	-44	446853-8	531134-8	—	-46	447192-8	—	-45	447193-8
210	**7.750** 196.85	**7.450** 189.23	**6.900** 175.26	—	531138-7[1]	-41	446853-7	531134-7	—	-43	447192-7	—	-42	447193-7
195	**7.250** 184.15	**6.950** 176.53	**6.400** 162.56	—	1-531138-3[1]	-38	1-446853-0	1-531134-3	1-531140-3[1]	-40	1-447192-0	—	-39	1-447193-0
180	**6.750** 171.45	**6.450** 163.83	**5.900** 149.86	—	531138-6[1]	-35	446853-6	531134-6	—	-37	447192-6	531139-6[1]	-36	447193-6
165	**6.250** 158.75	**5.950** 151.13	**5.400** 137.16	—	531138-5[1]	-32	446853-5	531134-5	—	-34	447192-5	—	-33	447193-5
150	**5.750** 146.05	**5.450** 138.43	**4.900** 124.46	—	531138-4[1] 5-531138-4[2]	-29	446853-4	531134-4	—	-31	447192-4	—	-30	447193-4
135	**5.250** 133.35	**4.950** 125.73	**4.400** 111.76	—	1-531138-2[1]	-26	446853-9	1-531134-2	—	-28	447192-9	1-531139-2[1]	-27	447193-9
126[3]	**4.950** 125.73	**4.650** 118.11	**4.100** 104.14	—	—	—	—	—	—	—	—	—	—	—
120	**4.750** 120.65	**4.450** 113.03	**3.900** 99.06	—	531138-3[1]	-23	446853-3	531134-3	—	-25	447192-3	—	-24	447193-3
105	**4.250** 107.95	**3.950** 100.33	**3.400** 86.36	—	531138-2[1] 5-531138-2[2]	-20	446853-2	531134-2	—	-22	447192-2	—	-21	447193-2
90	**3.750** 95.25	**3.450** 87.63	**2.900** 73.66	—	531138-1[1] 5-531138-1[2]	-17	446853-1	531134-1	—	-19	447192-1	531139-1[1]	-18	447193-1

[1]See Material and Finish above. [2]See Material and Finish for RoHS Part Numbers above. [3]Part Numbers available upon request.

Dimensions are shown for reference purposes only. Specifications subject to change.

Dimensions are in millimeters unless otherwise specified.

USA: +1 800 522 6752
Asia Pacific: +86 0 400 820 6015
UK: +44 800 267 666

For additional support numbers please visit www.te.com

3-Row Right-Angle Receptacle Assemblies with Posted Contacts (Wrap-Type)

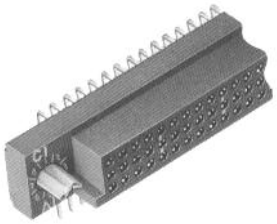

Housing Material — In accordance with MIL-C-55302

Contact Material and Finish — Beryllium copper or copper nickel silicon per ASTM B422 and ASTM B888 plated .000050 [0.00127] gold over .000030 [0.00076] nickel on the entire contact

Related Product Data

Mates with — Pin Headers, page 1-66

External Keying — page 1-80

Recommended PC Board Layout — page 1-76

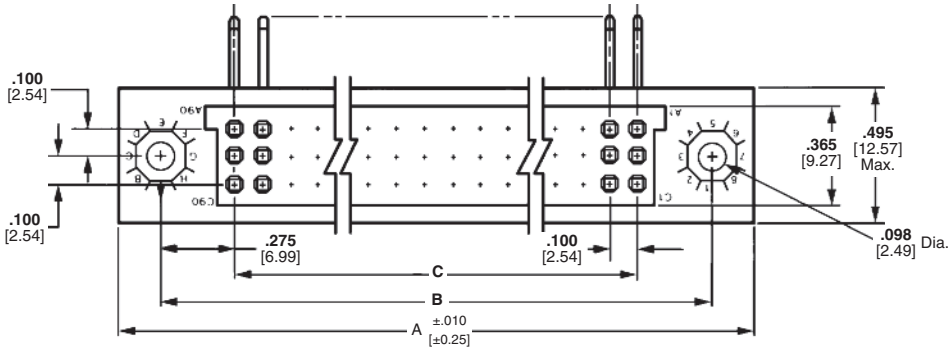

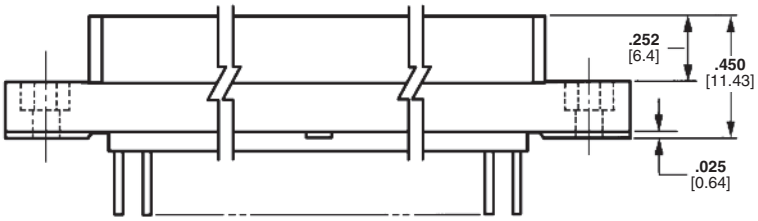

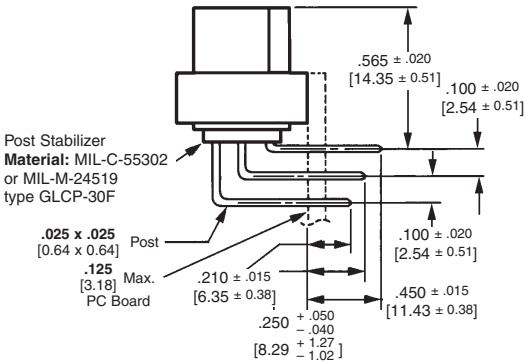

Right-Angle Wrap-Type Posts

No. of Pos.	Dimensions A	Dimensions B	Dimensions C	Part No.
270[1]	**9.750** 247.65	**9.450** 240.03	**8.900** 226.06	—
240[1]	**8.750** 222.25	**8.450** 214.63	**7.900** 200.66	—
210	**7.750** 196.85	**7.450** 189.23	**6.900** 175.26	447255-2
195	**7.250** 184.15	**6.950** 176.53	**6.400** 162.58	447255-3
180	**6.750** 171.45	**6.450** 163.83	**5.900** 149.86	447255-4
165[1]	**6.250** 158.75	**5.950** 151.13	**5.400** 137.16	—
150	**5.750** 146.05	**5.450** 138.43	**4.900** 124.46	447255-6
135[1]	**5.250** 133.35	**4.950** 125.73	**4.400** 111.76	—
126[1]	**4.950** 125.73	**4.650** 118.11	**4.100** 104.14	—
123[1]	**4.850** 123.19	**4.550** 115.57	**4.000** 101.6	—
120	**4.750** 120.65	**4.450** 113.03	**3.900** 86.36	447255-8
105	**4.250** 107.95	**3.950** 100.33	**3.400** 86.36	447255-9
90	**3.750** 95.25	**3.450** 87.63	**2.900** 73.66	1-447255-0

[1]Part numbers available upon request.

Catalog 1308940
Revised 9-14

www.te.com

Dimensions are shown for reference purposes only. Specifications subject to change.

Dimensions are in millimeters unless otherwise specified.

USA: +1 800 522 6752
Asia Pacific: +86 0 400 820 6015
UK: +44 800 267 666

For additional support numbers please visit www.te.com

3-Row Right-Angle Pin Header Assemblies — MIL-C-55302 Qualified

Housing Material — In accordance with MIL-C-55302 or MIL-M-24519 type GLCP-30F

[1] **Contact Material and Finish** — Commercial Flow Solder Contact — Brass per QQ-B-626 plated .000030 [0.00076] gold in the contact area, .000100 [0.00254] tin-lead on the tails over .000050 [0.00127] nickel on the entire contact; Military Flow Solder Contact — Brass per QQ-B-626 plated .000050 [0.00127] gold in the contact area, .000100 [0.00254] tin-lead on the tails over .000050 [0.00127] nickel on the entire contact; Wrap-Type Contact — Phosphor bronze plate .000050 [0.00127] gold over .000030 [0.00076] nickel on the entire contact

[2] **Contact Material and Finish** — Same as above except for tin on the tails

Related Product Data

Mates with — 3-Row Receptacles, pages 1-63 to 1-65

External Keying — page 1-80

Recommended PC Board Layout — page 1-76

Fixed Jackscrew — page 1-61

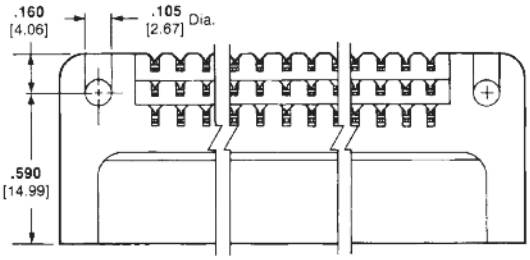

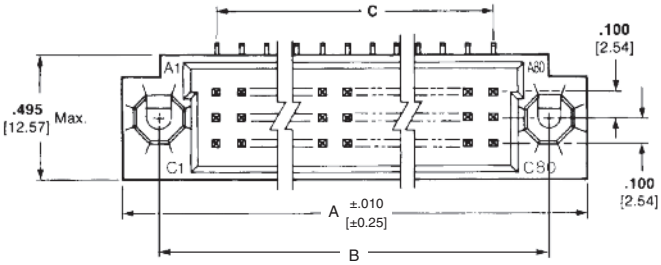

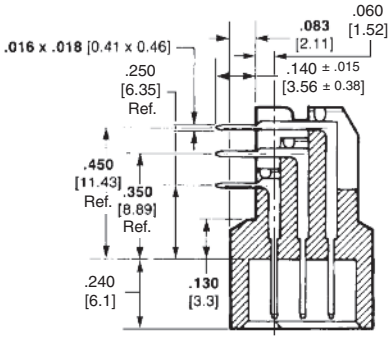

Flow Solder Contacts (for use with .096 [2.44] Max. thick PC board)

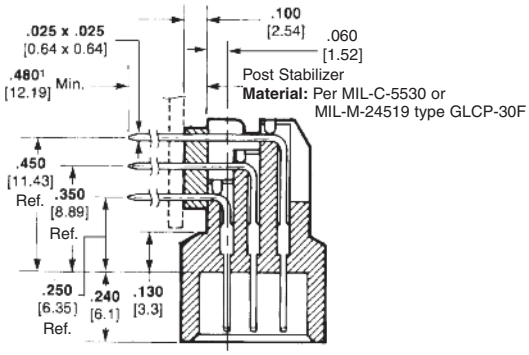

Wrap-Type Posted Contacts

[1]The three rows of posts will not be of equal length.

No. of Pos.	Dimensions A	Dimensions B	Dimensions C	Flow Solder Contacts: Commercial Part No. Sealed	Flow Solder Contacts: Commercial Part No. Unsealed	Flow Solder Contacts: MIL-Part No. M55302/129	Flow Solder Contacts: AMP Part No. Sealed	Flow Solder Contacts: AMP Part No. Unsealed	Wrap-Type Posted Contacts (2 High): AMP Part No. Without Stabilizer	Wrap-Type Posted Contacts (2 High): AMP Part No. With Stabilizer
300[3]	**10.750** 273.05	**10.450** 265.43	**9.900** 251.46	1-447373-1[1]	—	—	—	—	—	—
270[3]	**9.750** 247.65	**9.450** 240.03	**8.900** 226.06	—	—	—	—	—	—	—
240	**8.750** 222.25	**8.450** 214.63	**7.900** 200.66	—	531137-8[1]	-18	446852-8[1]	531133-8[1]	—	—
210	**7.750** 196.85	**7.450** 189.23	**6.900** 175.26	—	531137-7[1]	-17	446852-7[1]	531133-7[1]	—	—
195	**7.250** 184.15	**6.950** 176.53	**6.400** 162.56	—	1-531137-3[1]	-16	1-446852-0[1]	1-531133-3[1]	—	—
180	**6.750** 171.45	**6.450** 163.83	**5.900** 149.86	—	—	-15	446852-6[1]	531133-6[1]	—	—
165	**6.250** 158.75	**5.950** 151.13	**5.400** 137.16	—	531137-5[1]	-14	446852-5[1]	531133-5[1]	532775-3[1]	—
150	**5.750** 146.05	**5.450** 138.43	**4.900** 124.46	—	531137-4[1] 5-531137-4[2]	-13	446852-4[1]	531133-4[1]	1-532775-2[1]	—
135	**5.250** 133.35	**4.950** 125.73	**4.400** 111.76	—	—	-12	446852-9[1]	1-531133-2[1]	—	—
126	**4.950** 125.73	**4.650** 118.11	**4.100** 104.14	—	—	—	—	1-531133-0[1]	1-532775-0[1]	—
120	**4.750** 120.65	**4.450** 113.03	**3.900** 99.06	—	531137-3[1]	-11	446852-3[1]	531133-3[1]	532775-8[1]	447380-7[1]
105	**4.250** 107.95	**3.950** 100.33	**3.400** 86.36	—	531137-2[1] 5-531137-2[2]	-10	446852-2[1]	531133-2[1]	—	—
90	**3.750** 95.25	**3.450** 87.63	**2.900** 73.66	—	531137-1[1] 5-531137-1[2]	-09	446852-1[1]	531133-1[1]	—	447380-5[1]

[1]See Material and Finish above. [2]See Material and Finish for RoHS Part Numbers. [3]Part Numbers available upon request.

Dimensions are shown for reference purposes only. Specifications subject to change.

Dimensions are in millimeters unless otherwise specified.

USA: +1 800 522 6752
Asia Pacific: +86 0 400 820 6015
UK: +44 800 267 666

For additional support numbers please visit www.te.com

4-Row Receptacle Assemblies

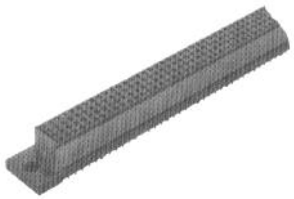

Housing Material — Polyphenylene sulfide per MIL-M-24519 or type GLCP-30F

[1] **Contact Material and Finish** — Beryllium copper or copper nickel silicon per ASTM B422 and ASTM B888 plated gold .000050 [0.00127] thick per MIL-G-45204 in contact area, tails plated tin-lead all over nickel per QQ-N-290

[2] **Contact Material and Finish** — Same as above except for tin on tails

Related Product Data

Mates with — Pin Header assembly, page 1-68

External Keying — page 1-80

Recommended PC Board Layout — page 1-77

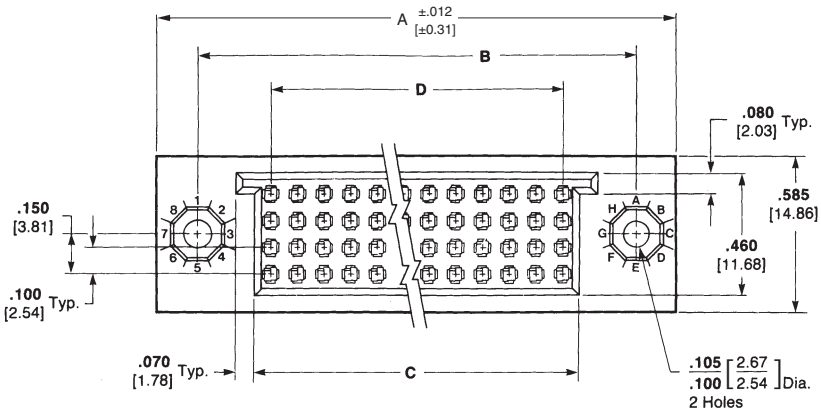

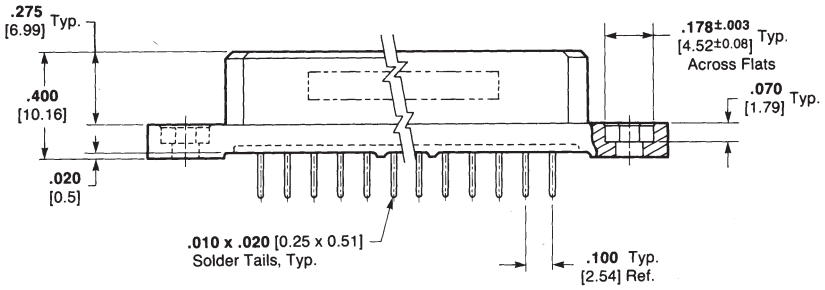

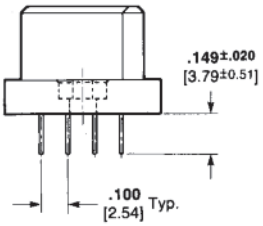

No. of Pos.	Dimensions A	Dimensions B	Dimensions C	Dimensions D	Part No.[1]	RoHS Part No.[2]
300	**8.250** 209.60	**7.950** 201.93	**7.524** 191.11	**7.400** 187.96	—*	—
292	**8.050** 204.47	**7.750** 196.85	**7.324** 186.03	**7.200** 182.88	—*	—
280	**7.750** 196.85	**7.450** 189.23	**7.024** 178.41	**6.900** 175.26	—*	—
268	**7.450** 189.23	**7.150** 181.61	**6.724** 170.79	**6.600** 167.64	—*	—
260	**7.250** 184.15	**6.950** 176.53	**6.524** 165.71	**6.400** 162.56	—*	—
240	**6.750** 171.45	**6.450** 163.83	**6.024** 153.01	**5.900** 149.86	—*	—
232	**6.550** 166.37	**6.250** 158.75	**5.824** 147.93	**5.700** 144.78	—*	—
220	**6.250** 158.75	**5.950** 151.13	**5.524** 140.31	**5.400** 137.16	446081-8	—
216	**6.150** 156.21	**5.850** 148.59	**5.424** 137.77	**5.300** 134.62	—*	—
200	**5.750** 146.05	**5.450** 138.43	**5.024** 127.61	**4.900** 124.46	1-446081-0	6-446081-0
192	**5.550** 140.97	**5.250** 133.35	**4.824** 122.53	**4.700** 119.38	—*	—
180	**5.250** 133.35	**4.950** 125.73	**4.524** 114.91	**4.400** 111.76	—*	—
168	**4.950** 125.73	**4.650** 118.11	**4.224** 107.29	**4.100** 104.14	—*	—
160	**4.750** 120.65	**4.450** 113.03	**4.024** 102.21	**3.900** 99.06	—*	—
152	**4.550** 115.57	**4.250** 107.95	**3.824** 97.13	**3.700** 93.98	—*	—
140	**4.250** 107.95	**3.950** 100.33	**3.524** 89.51	**3.400** 86.36	—*	—
128	**3.950** 100.33	**3.650** 92.71	**3.224** 81.89	**3.100** 78.74	1-446081-7	6-446081-7
120	**3.750** 95.25	**3.450** 87.63	**3.024** 76.81	**2.900** 73.66	—*	—
100	**3.250** 82.55	**2.950** 74.93	**2.524** 64.11	**2.400** 60.96	1-446081-9	—
68	**2.450** 62.23	**2.150** 54.60	**1.727** 43.87	**1.600** 40.64	—*	—
40	**1.750** 44.45	**1.450** 36.83	**1.024** 26.01	**.900** 22.86	—*	—

* Part Numbers available upon request, contact TE Connectivity.

Dimensions are shown for reference purposes only. Specifications subject to change.

Dimensions are in millimeters unless otherwise specified.

USA: +1 800 522 6752
Asia Pacific: +86 0 400 820 6015
UK: +44 800 267 666

For additional support numbers please visit www.te.com

4-Row Right-Angle Pin Header Assemblies

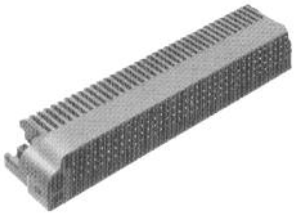

Housing Material — Polyphenylene sulfide per MIL-M-24519 or type GLCP-30F

[1] **Contact Material and Finish** — Phosphor bronze per QQ-B-750, plated gold .000050 [0.00127] thick per MIL-G-45204 on mating end for a length of .120 [3.05] min., tails plated tin-lead over nickel per QQ-N-290

[2] **Contact Material and Finish** — Same as above except for tin on tails

Related Product Data

Mates with — Receptacle assembly, page 1-67

External Keying — page 1-80

Recommended PC Board Layout — page 1-77

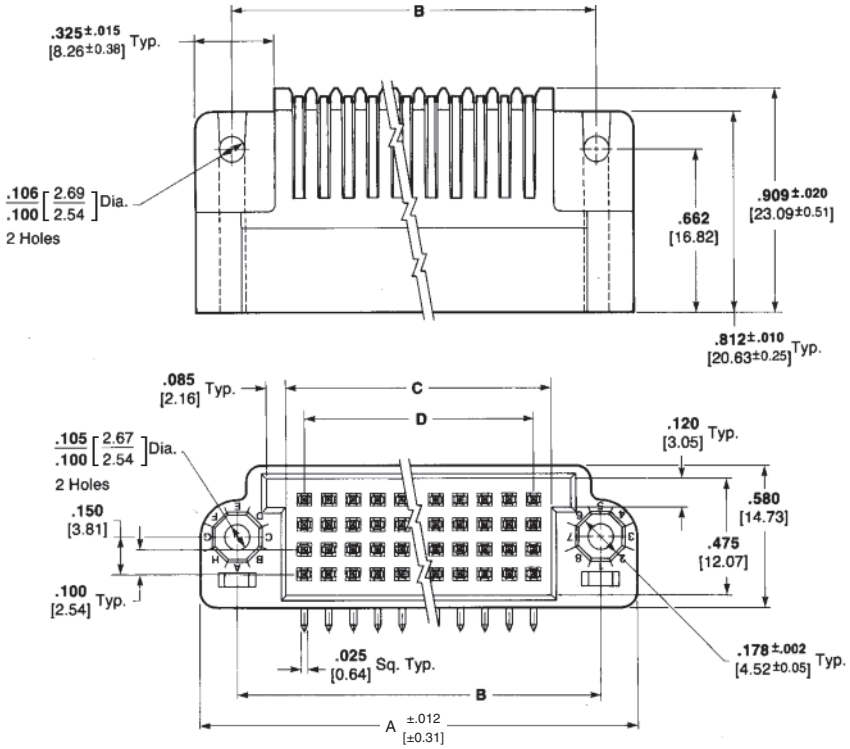

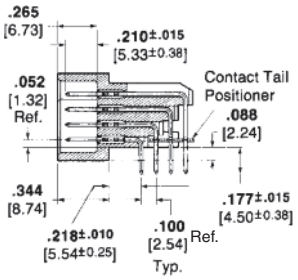

No. of Pos.	Dimensions A	B	C	D	Part No.[1]	RoHS Part No.[2]
300	**8.250** 209.60	**7.950** 201.93	**7.550** 191.77	**7.400** 187.96	—*	—
292	**8.050** 204.47	**7.750** 196.85	**7.350** 186.69	**7.200** 182.88	—*	—
280	**7.750** 196.85	**7.450** 189.23	**7.050** 179.07	**6.900** 175.26	—*	—
268	**7.450** 189.23	**7.150** 181.61	**6.750** 171.45	**6.600** 167.64	—*	—
260	**7.250** 184.15	**6.950** 176.53	**6.550** 166.37	**6.400** 162.56	—*	—
240	**6.750** 171.45	**6.450** 163.83	**6.050** 153.67	**5.900** 149.86	—*	—
232	**6.550** 166.37	**6.250** 158.75	**5.850** 148.59	**5.700** 144.78	—*	—
220	**6.250** 158.75	**5.950** 151.13	**5.550** 140.97	**5.400** 137.16	—*	—
216	**6.150** 156.21	**5.850** 148.59	**5.450** 138.43	**5.300** 134.62	—*	—
200	**5.750** 146.05	**5.450** 138.43	**5.050** 128.27	**4.900** 124.46	1-446080-0	6-446080-0
192	**5.550** 140.97	**5.250** 133.35	**4.850** 123.19	**4.700** 119.38	—*	—
180	**5.250** 133.35	**4.950** 125.73	**4.550** 115.57	**4.400** 111.76	1-446080-2	—
168	**4.950** 125.73	**4.650** 118.11	**4.250** 107.95	**4.100** 104.14	—*	—
160	**4.750** 120.65	**4.450** 113.03	**4.050** 102.87	**3.900** 99.06	—*	—
152	**4.550** 115.57	**4.250** 107.95	**3.850** 97.79	**3.700** 93.98	—*	—
140	**4.250** 107.95	**3.950** 100.33	**3.550** 90.17	**3.400** 86.36	—*	—
128	**3.950** 100.33	**3.650** 92.71	**3.250** 82.55	**3.100** 78.74	1-446080-7	6-446080-7
120	**3.750** 95.25	**3.450** 87.63	**3.050** 77.47	**2.900** 73.66	—*	—
100	**3.250** 82.55	**2.950** 74.93	**2.550** 64.77	**2.400** 60.96	—*	—
68	**2.450** 62.23	**2.150** 54.60	**1.750** 44.45	**1.600** 40.64	—*	—
40	**1.750** 44.45	**1.450** 36.83	**1.050** 26.67	**.900** 22.86	—*	—

* Part Numbers available upon request, contact TE Connectivity.

Dimensions are shown for reference purposes only. Specifications subject to change.

Dimensions are in millimeters unless otherwise specified.

USA: +1 800 522 6752
Asia Pacific: +86 0 400 820 6015
UK: +44 800 267 666

For additional support numbers please visit www.te.com

Receptacle Assemblies with Hybrid Cavities

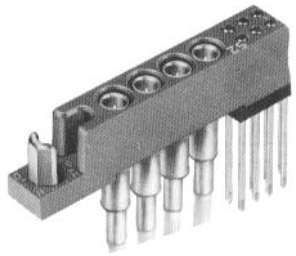

8 Hybrid Cavity Shown

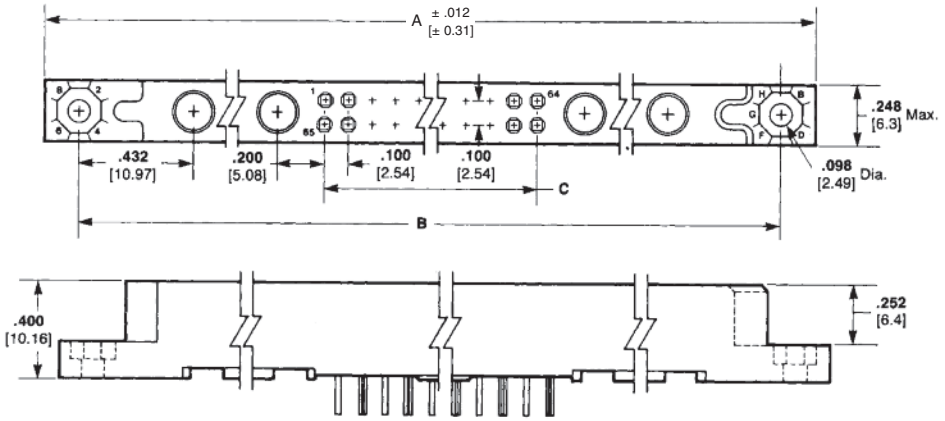

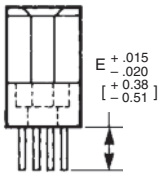

.014 x .019 [0.36 x 0.48] Channel Contact

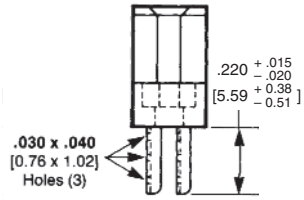

Solder Eyelet Contact (Max. Wire Size, #26 AWG [0.15 mm])

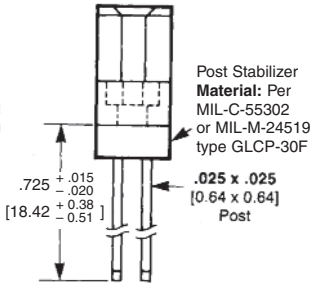

Wrap-Type Posted Contact (3 terminations per post)

E = .235 [5.97] - 2 Hybrid cavity connector
.154 [3.91] - 4 and 6 Hybrid cavity connector

Housing Material — In accordance with MIL-C-55302 or MIL-M-24519 type GLCP-30F

Contact Material and Finish — Beryllium copper per QQ-C-533 or copper nickel silicon per ASTM B422 and ASTM B888 Channel Contact and Posted Contact — Plated .000050 [0.00127] gold in contact area, .000100 [0.00254] tin-lead on the tails over .00030 [0.0076] nickel on the entire contact; Solder Eyelet Contact — Plated .000050 [0.00127] gold in the contact area, in accordance with MIL-C-55302 .000100 [0.00254] tin-lead on the tails over .000050 [0.00127] nickel on the entire contact

Related Product Data

Mates with — Right-Angle Pin Headers, pages 1-71 and 1-72

External Keying — page 1-80

Recommended PC Board Layout — page 1-78

2 Hybrid Cavity Connectors[1]

No. of Box Contact Pos.	Dimensions A	Dimensions B	Dimensions C	.014 x .019 [0.36 x 0.48] Channel Contacts Part No.
128	**7.885** 199.52	**7.565** 192.15	**6.300** 160.02	—*
122	**7.555** 191.90	**7.265** 184.53	**6.000** 152.4	—*
118	**7.355** 186.82	**7.065** 179.45	**5.800** 147.32	—*
108	**6.855** 174.12	**6.565** 166.75	**5.300** 134.62	—*
98	**6.335** 161.42	**6.065** 154.05	**4.800** 121.92	—*
88	**5.855** 148.72	**5.565** 141.35	**4.300** 109.22	—*
78	**5.355** 136.02	**5.065** 128.65	**3.800** 96.52	533606-7
68	**4.855** 123.32	**4.565** 115.95	**3.300** 83.82	—*
58	**4.355** 110.62	**4.065** 103.25	**2.800** 71.12	533606-5
48	**3.855** 97.92	**3.565** 90.55	**2.300** 58.42	—*
38	**3.355** 85.22	**3.065** 77.85	**1.800** 45.72	—*
28	**2.855** 72.52	**2.565** 65.15	**1.300** 33.02	533606-2
18	**2.355** 58.82	**2.065** 52.45	**.800** 20.32	533606-1

[1]These receptacle assemblies accept coaxial contacts—Vertical Cable Socket 227605-1, Right-Angle Cable Socket 227606-1 and Vertical Printed Circuit Board Mount Socket 227603-1.
* Part Numbers available upon request, contact TE Connectivity.

Catalog 1308940
Revised 9-14

www.te.com

Dimensions are shown for reference purposes only. Specifications subject to change.

Dimensions are in millimeters unless otherwise specified.

USA: +1 800 522 6752
Asia Pacific: +86 0 400 820 6015
UK: +44 800 267 666

For additional support numbers please visit www.te.com

Receptacle Assemblies with Hybrid Cavities (Continued)

4 Hybrid Cavity Connectors[1]

No. of Box Contact Pos.	Dimensions A	B	C	D	.014 x .019 [0.36 x 0.48] Channel Contacts Part No.	Solder Eyelet Contacts Part No.	Wrap-Type Posted Contacts Part No.
120	**7.855** 199.52	**7.565** 192.15	**5.900** 149.86	**.200** 5.08	—*	—*	—*
110	**7.355** 186.82	**7.065** 179.45	**5.400** 137.16	**.200** 5.08	—*	—*	—*
100	**6.855** 174.12	**6.565** 166.75	**4.900** 124.46	**.200** 5.08	533189-8	—*	533181-3
90	**6.355** 161.42	**6.065** 154.05	**4.400** 111.76	**.200** 5.08	—*	—*	—*
80	**5.855** 148.72	**5.565** 141.35	**3.900** 99.06	**.200** 5.08	—*	—*	—*
70	**5.355** 136.02	**5.065** 128.65	**3.400** 86.36	**.200** 5.08	—*	—*	—*
60	**4.855** 123.32	**4.565** 115.95	**2.900** 73.66	**.200** 5.08	—*	—*	—*
50	**4.355** 110.62	**4.065** 103.25	**2.400** 60.96	**.200** 5.08	—*	—*	—*
40	**3.855** 97.92	**3.565** 90.55	**1.900** 48.26	**.200** 5.08	533189-3	—*	—*
30	**3.355** 85.22	**3.065** 77.85	**1.400** 35.56	**.200** 5.08	533189-2	—*	—*

6 Hybrid Cavity Connectors[1]

No. of Box Contact Pos.	Dimensions A	B	C	D	.014 x .019 [0.36 x 0.48] Channel Contacts Part No.
112	**7.855** 199.52	**7.565** 192.15	**5.500** 139.7	**.400** 10.16	—*
102	**7.355** 186.82	**7.065** 179.45	**5.000** 127.0	**.400** 10.16	—*
92	**6.855** 174.12	**6.565** 166.75	**4.500** 114.3	**.400** 10.16	—*
82	**6.355** 161.42	**6.065** 154.05	**4.000** 101.6	**.400** 10.16	—*
72	**5.855** 148.72	**5.565** 141.35	**3.500** 88.9	**.400** 10.16	—*
62	**5.355** 136.02	**5.065** 128.65	**3.000** 76.2	**.400** 10.16	533639-5
52	**4.855** 123.32	**4.565** 115.95	**2.500** 63.5	**.400** 10.16	—*
42	**4.355** 110.62	**4.065** 103.25	**2.000** 50.8	**.400** 10.16	—*
32	**3.855** 97.92	**3.565** 90.55	**1.500** 38.1	**.400** 10.16	—*
22	**3.355** 85.22	**3.065** 77.85	**1.000** 25.4	**.400** 10.16	533639-1

8 Hybrid Cavity Connectors[1]

No. of Box Contact Positions	Dimensions A	B	C	D	Wrap-Type Contacts Part No.
104	**7.855** 199.52	**7.565** 192.15	**5.100** 129.54	**.600** 15.24	—*
94	**7.355** 186.82	**7.065** 179.45	**4.600** 116.84	**.600** 15.24	—*
84	**6.855** 174.12	**6.565** 166.75	**4.100** 104.14	**.600** 15.24	—*
74	**6.355** 161.42	**6.065** 154.05	**3.600** 91.44	**.600** 15.24	—*
64	**5.855** 148.72	**5.565** 141.35	**3.100** 78.74	**.600** 15.24	—*
54	**5.355** 136.02	**5.065** 128.65	**2.600** 66.04	**.600** 15.24	—*
44	**4.855** 123.32	**4.565** 115.95	**2.100** 53.34	**.600** 15.24	—*
34	**4.355** 110.62	**4.065** 103.25	**1.600** 40.64	**.600** 15.24	533170-8
24	**3.855** 97.92	**3.565** 90.55	**1.100** 27.94	**.600** 15.24	—*
14	**3.355** 85.22	**3.065** 77.85	**.600** 15.24	**.600** 15.24	1-533170-0

[1]These receptacle assemblies accept coaxial contacts — Vertical Cable Sockets 227605-1, Right-Angle Cable Socket 227606-1 and Vertical PC Board Mount Socket 227603-1.
* Part Numbers available upon request, contact TE Connectivity.

Dimensions are shown for reference purposes only. Specifications subject to change.

Dimensions are in millimeters unless otherwise specified.

USA: +1 800 522 6752
Asia Pacific: +86 0 400 820 6015
UK: +44 800 267 666

For additional support numbers please visit www.te.com

Right-Angle Pin Header Assemblies with Hybrid Contact Cavities

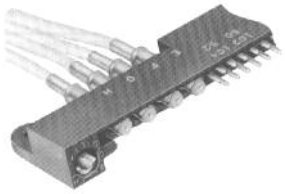

8 Hybrid Cavity Shown

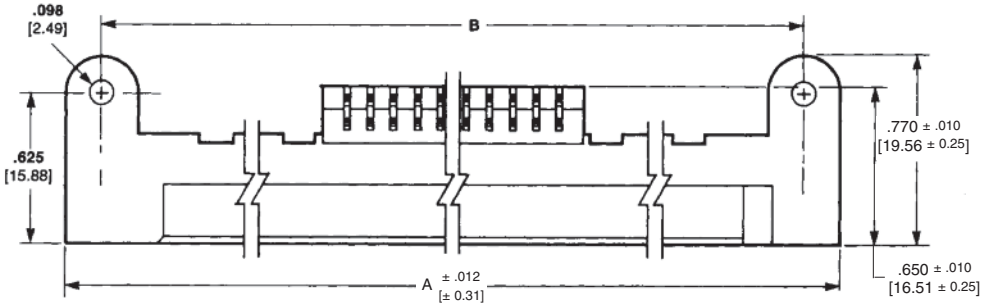

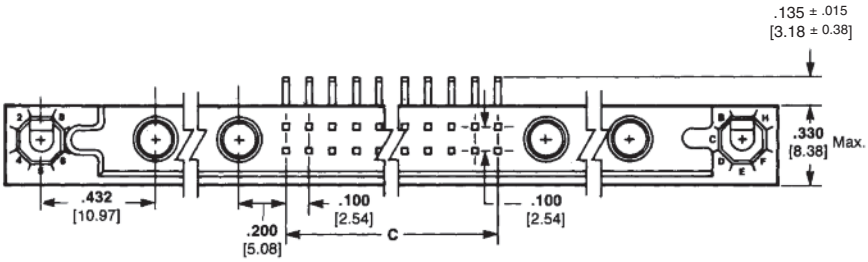

Related Product Data

Mates with — Receptacles, pages 1-69 and 1-70

External Keying — page 1-80

Recommended PC Board Layout — page 1-79

Fixed Jackscrews — page 1-61

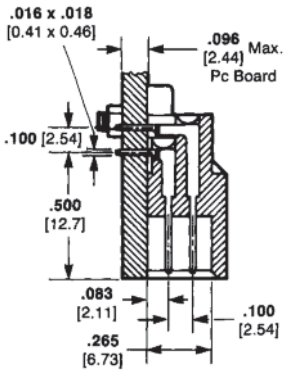

Housing Material — In accordance with MIL-C-55302 or MIL-M-24519 type GLCP-30F

[2] **Contact Material and Finish** — Brass per QQ-B-626 plated .000050 [0.00127] gold in the contact area, .000100 [0.00254] tin-lead on the tail over .000050 [0.00127] nickel on the entire contact

[3] **Contact Material and Finish** — Same as above except for tin on the tail

2 Hybrid Cavity Connectors[1]

No. of Box Contact Pos.	Dimensions A	Dimensions B	Dimensions C	Part No.[2]	RoHS Part No.[3]
128	**7.885** 199.52	**7.565** 192.15	**6.300** 160.02	—*	—
122	**7.555** 191.90	**7.265** 184.53	**6.000** 152.4	—*	—
118	**7.355** 186.82	**7.065** 179.45	**5.800** 147.32	—*	—
108	**6.855** 174.12	**6.565** 166.75	**5.300** 134.62	—*	—
98	**6.335** 161.42	**6.065** 154.05	**4.800** 121.92	—*	—
88	**5.855** 148.72	**5.565** 141.35	**4.300** 109.22	—*	—
78	**5.355** 136.02	**5.065** 128.65	**3.800** 96.52	—*	—
68	**4.855** 123.32	**4.565** 115.95	**3.300** 83.82	—*	—
58	**4.355** 110.62	**4.065** 103.25	**2.800** 71.12	—*	—
48	**3.855** 97.92	**3.565** 90.55	**2.300** 58.42	—*	—
38	**3.355** 85.22	**3.065** 77.85	**1.800** 45.72	—*	—
28	**2.855** 72.52	**2.565** 65.15	**1.300** 33.02	533607-3	—
18	**2.355** 59.82	**2.065** 52.45	**.800** 20.32	533607-1	5-533607-1

[1]These pin header assemblies accept coaxial contacts—Vertical Cable Pin 227604-1 and Right-Angle Printed Circuit Board Mount Pin 227602-1.

* Part Numbers available upon request, contact TE Connectivity.

Dimensions are shown for reference purposes only. Specifications subject to change.

Dimensions are in millimeters unless otherwise specified.

USA: +1 800 522 6752
Asia Pacific: +86 0 400 820 6015
UK: +44 800 267 666

For additional support numbers please visit www.te.com

Right-Angle Pin Header Assemblies with Hybrid Contact Cavities (Continued)

4 Hybrid Cavity Connectors[1]

No. of Box Contact Pos.	Dimensions A	B	C	D	Part No.[2]	RoHS Part No.[3]
120	**7.855** 199.52	**7.565** 192.15	**5.900** 149.86	**.200** 5.08	1-533182-0	—
80	**5.855** 148.72	**5.565** 141.35	**3.900** 99.06	**.200** 5.08	—*	—
70	**5.355** 136.02	**5.065** 128.65	**3.400** 86.36	**.200** 5.08	—*	—
40	**3.855** 97.92	**3.565** 90.55	**1.900** 48.26	**.200** 5.08	533182-3	5-533182-3
30	**3.355** 85.22	**3.065** 77.85	**1.400** 35.56	**.200** 5.08	—*	—

6 Hybrid Cavity Connectors[1]

No. of Box Contact Pos.	Dimensions A	B	C	D	Part No.
112	**7.855** 199.52	**7.565** 192.15	**5.500** 139.7	**.400** 10.16	—*
102	**7.355** 186.82	**7.065** 179.45	**5.000** 127.0	**.400** 10.16	—*
92	**6.855** 174.12	**6.565** 166.75	**4.500** 114.3	**.400** 10.16	—*
82	**6.355** 161.42	**6.065** 154.05	**4.000** 101.6	**.400** 10.16	—*
72	**5.855** 148.72	**5.565** 141.35	**3.500** 88.9	**.400** 10.16	—*
62	**5.355** 136.02	**5.065** 128.65	**3.000** 76.2	**.400** 10.16	533637-5
52	**4.855** 123.32	**4.565** 115.95	**2.500** 63.5	**.400** 10.16	—*
42	**4.355** 110.62	**4.065** 103.25	**2.000** 50.8	**.400** 10.16	—*
32	**3.855** 97.92	**3.565** 90.55	**1.500** 38.1	**.400** 10.16	—*
22	**3.355** 85.22	**3.065** 77.85	**1.000** 25.4	**.400** 10.16	—*

8 Hybrid Cavity Connectors[1]

No. of Box Contact Pos.	Dimensions A	B	C	D	Part No.
104	**7.855** 199.52	**7.565** 192.15	**5.100** 129.54	**.600** 15.24	—*
94	**7.355** 186.82	**7.065** 179.45	**4.600** 116.84	**.600** 15.24	533171-2
84	**6.855** 174.12	**6.565** 166.75	**4.100** 104.14	**.600** 15.24	—*
74	**6.355** 161.42	**6.065** 154.05	**3.600** 91.44	**.600** 15.24	—*
64	**5.855** 148.72	**5.565** 141.35	**3.100** 78.74	**.600** 15.24	533171-5
54	**5.355** 136.02	**5.065** 128.65	**2.600** 66.04	**.600** 15.24	—*
44	**4.855** 123.32	**4.565** 115.95	**2.100** 53.34	**.600** 15.24	—*
34	**4.355** 110.62	**4.065** 103.25	**1.600** 40.64	**.600** 15.24	533171-8
24	**3.855** 97.92	**3.565** 90.55	**1.100** 27.94	**.600** 15.24	—*
14	**3.355** 85.22	**3.065** 77.85	**.600** 15.24	**.600** 15.24	1-533171-0

[1]These pin header assemblies accept coaxial contacts—Vertical Cable Pin 227604-1 and Right-Angle Printed Circuit Board Mount Pin 227602-1.
[2]See Material and Finish on previous page.
[3]See Material and Finish for RoHS Part Numbers on previous page.
* Part Numbers available upon request, contact TE Connectivity.

Dimensions are shown for reference purposes only. Specifications subject to change.

Dimensions are in millimeters unless otherwise specified.

USA: +1 800 522 6752
Asia Pacific: +86 0 400 820 6015
UK: +44 800 267 666

For additional support numbers please visit www.te.com

Microminiature COAXICON Contacts for Hybrid Cavities

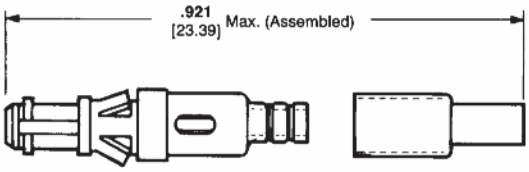

Cable Pin

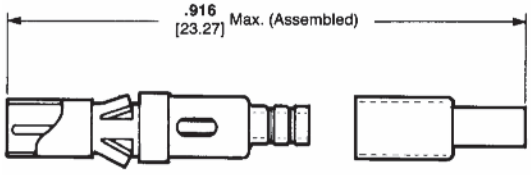

Cable Socket

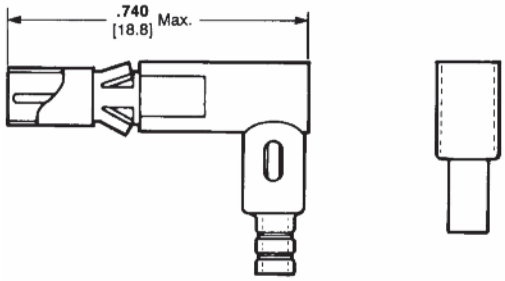

Right-Angle Cable Socket

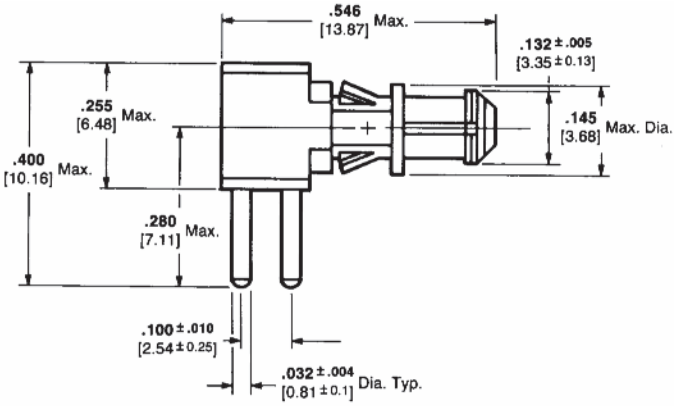

Right-Angle Pin
for PC Board Application
Part Number 227602-1
Plated .000030 [0.00076] gold

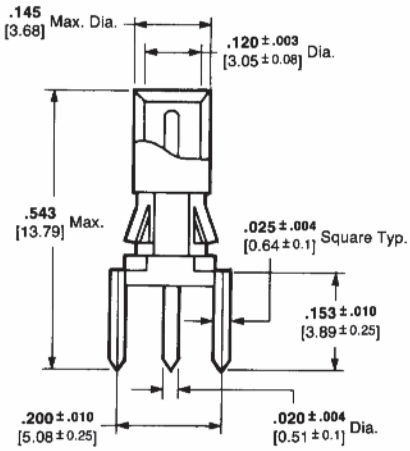

Vertical Socket
for PC Board Application
Part Number 227603-1

Cable Size	Contact Style	Part No.	Application Tool Part No.
RG 178/U Double Braid RG 196/U	Cable Pin	227604-1	220215-1
	Cable Socket	227605-1	
	Right-Angle Cable Socket	227606-1	

Extraction Tool Part Number 220216-1

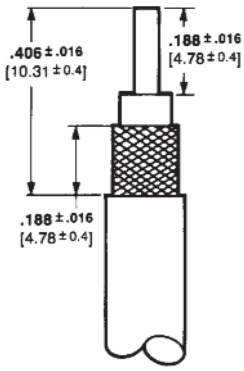

Recommended Strip Length

Notes:
1. Center contacts are plated with .000030 [0.00076] gold.
2. For .125 [3.18] maximum thick PC boards.

Electrical Characteristics

Nominal Impedance — 50 ohms

Frequency Range — 0-2 GHz

Maximum Operating Voltage (Sea Level) — 150 VAC RMS

Mechanical Characteristics

Operating Temperature Range — –55°C to +125°C

Cable Retention — 15 lb. [66.7N] min. (RG 178 type double braid)

Contact Materials

Stainless Steel — QQ-S-766

Gold Plate — MIL-G-45204

Nickel Plate — QQ-N-290

Beryllium Copper — QQ-C-530

PTFE — MIL-P-19468A

Brass — QQ-B-626

Ferrule Material

Brass — MIL-C-50, tin plate per MIL-T-10727

Catalog 1308940
Revised 9-14

www.te.com

Dimensions are shown for reference purposes only. Specifications subject to change.

Dimensions are in millimeters unless otherwise specified.

USA: +1 800 522 6752
Asia Pacific: +86 0 400 820 6015
UK: +44 800 267 666

For additional support numbers please visit www.te.com

Recommended Printed Circuit Board Layouts

Receptacle Assemblies

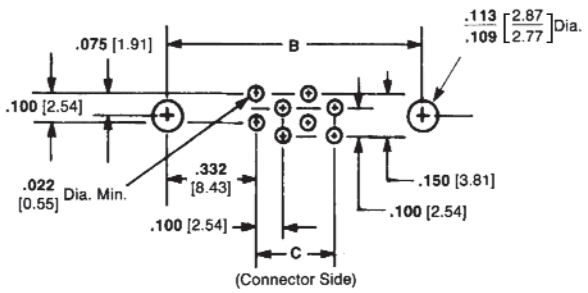

.014 x .019 [0.36 x 0.48] Channel Contacts

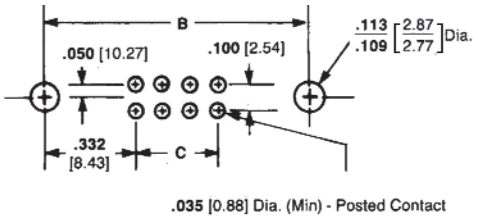

.025 x .025 [0.64 x 0.64] Posted Contacts

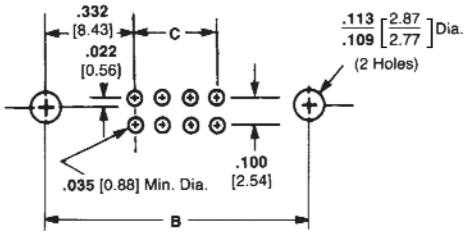

Right-Angle .025 x .025 [0.64 x 0.64] Posted Contacts

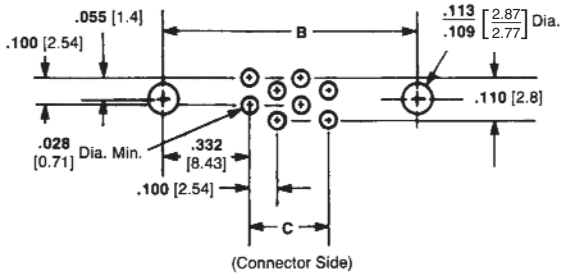

.010 x .020 [0.25 x 0.51] Posted Contacts

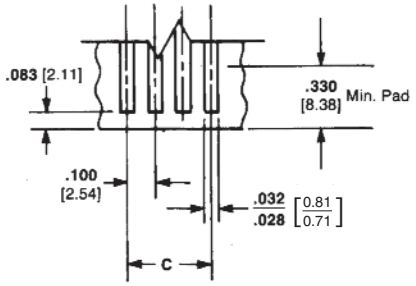

Card Extender Contacts

No. of Pos.	Dimensions	
	B	C
140	**7.565** 192.15	**6.900** 175.26
134	**7.265** 184.53	**6.600** 167.64
130	**7.065** 179.45	**6.400** 162.56
120	**6.565** 166.75	**5.906** 149.86
110	**6.065** 154.05	**5.400** 137.16
100	**5.565** 141.35	**4.900** 124.46
90	**5.065** 128.65	**4.400** 111.76
80	**4.565** 115.95	**3.900** 99.06
70	**4.065** 103.25	**3.400** 86.36
60	**3.565** 90.55	**2.900** 73.66
50	**3.065** 77.85	**2.400** 60.96
40	**2.565** 65.15	**1.900** 48.26
30	**2.065** 52.45	**1.400** 35.56

Catalog 1308940
Revised 9-14

www.te.com

Dimensions are shown for reference purposes only. Specifications subject to change.

Dimensions are in millimeters unless otherwise specified.

USA: +1 800 522 6752
Asia Pacific: +86 0 400 820 6015
UK: +44 800 267 666

For additional support numbers please visit www.te.com

Recommended Printed Circuit Board Layouts (Continued)

Pin Header Assemblies

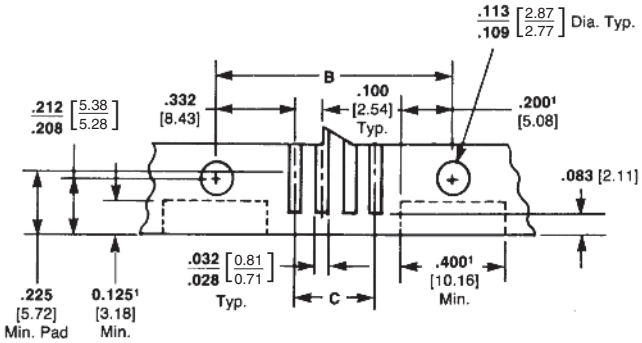

¹Optional cut-out for keying after connector is mounted.

Straddle Mount Assembly

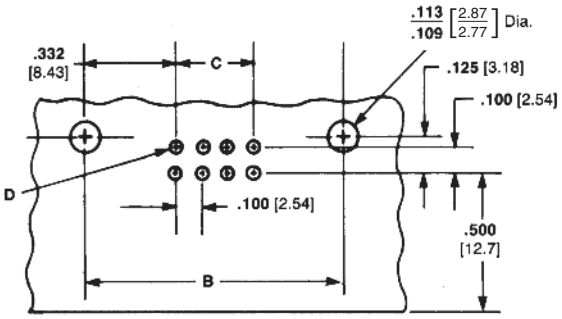

D = Right-Angle Flow Solder - .035 [0.88] Dia. (Min.)
Wrap-Type Posts - .045 [1.14] Dia. (Min.)

Right-Angle Flow Solder and Wrap-Type Posted Contacts

Note: These drawings are for reference only. Consult TE Connectivity for board layout details.

No. of Pos.	Dimensions	
	B	C
140	**7.565** 192.15	**6.900** 175.26
134	**7.265** 184.53	**6.600** 167.64
130	**7.065** 179.45	**6.400** 162.56
120	**6.565** 166.75	**5.906** 149.86
110	**6.065** 154.05	**5.400** 137.16
100	**5.565** 141.35	**4.900** 124.46
90	**5.065** 128.65	**4.400** 111.76
80	**4.565** 115.95	**3.900** 99.06
70	**4.065** 103.25	**3.400** 86.36
60	**3.565** 90.55	**2.900** 73.66
50	**3.065** 77.85	**2.400** 60.96
40	**2.565** 65.15	**1.900** 48.26
30	**2.065** 52.45	**1.400** 35.56

3-Row Assembly Recommended Printed Circuit Board Layouts

Receptacle Assemblies

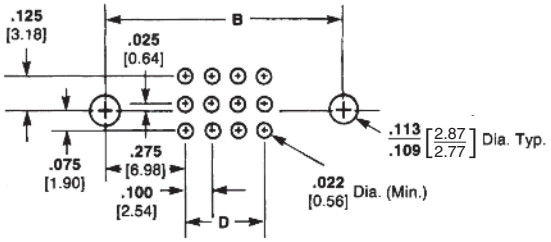

.014 x .019 [0.36 x 0.48] Channel Contacts

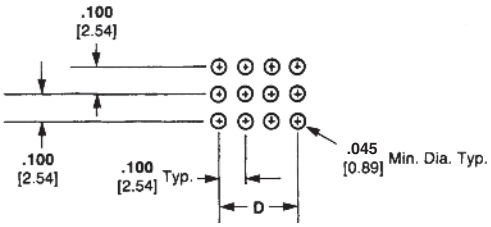

Right-Angle Wrap-Type Posted Contacts

Pin Header Assemblies

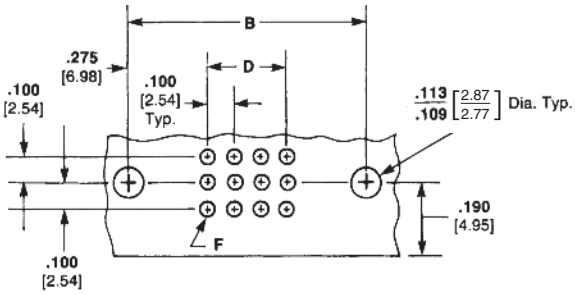

F = Right-Angle Flow Solder — **.035** [0.88] Dia. Min.
Wrap-Type Posts — .045 [1.14] Dia. Min.

Right-Angle Flow Solder and Wrap-Type Posted Contacts

Note: These drawings are for reference only. Consult TE Connectivity for board layout details.

No. of Pos.	Dimensions	
	B	D
300	10.450 265.43	9.900 251.46
270	9.450 240.03	8.900 226.06
240	8.450 214.63	7.900 200.66
210	7.450 189.23	6.900 175.26
180	6.450 163.83	5.900 149.86
165	5.950 151.13	5.400 137.16
150	5.450 138.43	4.900 124.46
126	4.650 118.11	4.100 104.14
123	4.550 115.57	4.000 101.6
120	4.450 113.03	3.900 99.06
105	3.950 100.33	3.400 86.36
90	3.450 87.63	2.900 73.66

4-Row Assembly Recommended Printed Circuit Board Layouts

Receptacle Assemblies

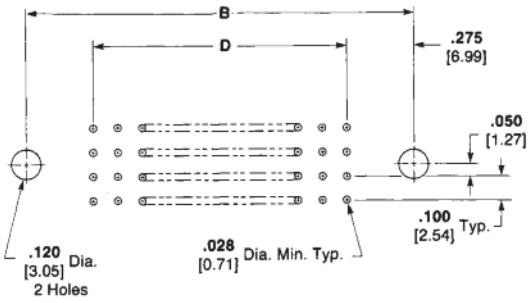

Pin Header Assemblies

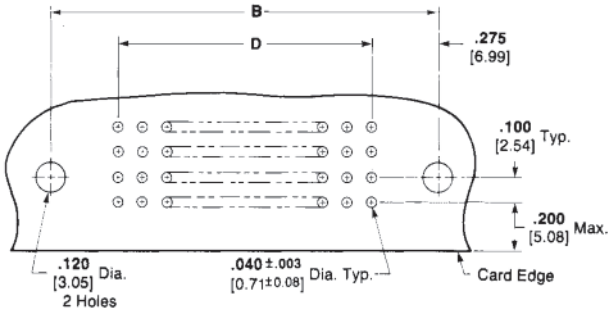

No. of Pos.	Dimensions	
	B	D
300	7.950 201.93	7.400 187.96
292	7.750 196.85	7.200 182.88
280	7.450 189.23	6.900 175.26
268	7.150 181.61	6.600 167.64
260	6.950 176.53	6.400 162.56
240	6.450 163.83	5.900 149.86
232	6.250 158.75	5.700 144.78
220	5.950 151.13	5.400 137.16
216	5.850 148.59	5.300 134.62
200	5.450 138.43	4.900 124.46
192	5.250 133.35	4.700 119.38
180	4.950 125.73	4.400 111.76
168	4.650 118.11	4.100 104.14
160	4.450 113.03	3.900 99.06
152	4.250 107.95	3.700 93.98
140	3.950 100.33	3.400 86.36
128	3.650 92.71	3.100 78.74
120	3.450 87.63	2.900 73.66
100	2.950 74.93	2.400 60.96
68	2.150 54.60	1.600 40.64
40	1.450 36.83	.900 22.86

Dimensions are shown for reference purposes only. Specifications subject to change.

Dimensions are in millimeters unless otherwise specified.

USA: +1 800 522 6752
Asia Pacific: +86 0 400 820 6015
UK: +44 800 267 666

For additional support numbers please visit www.te.com

Hybrid Contacts Recommended Printed Circuit Board Layouts

Receptacle Assemblies with Hybrid Contacts

With Cable

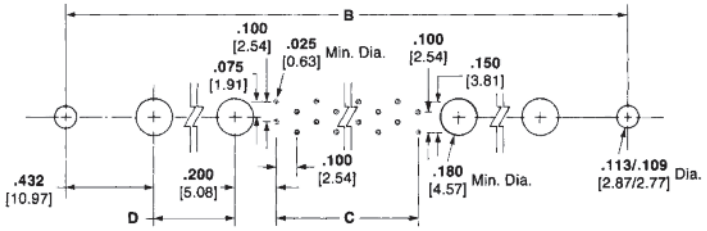

.014 x .019 [0.36 x 0.48] Channel Contacts
with Hybrid Printed Circuit Board Mount Sockets

With Solder Terminations

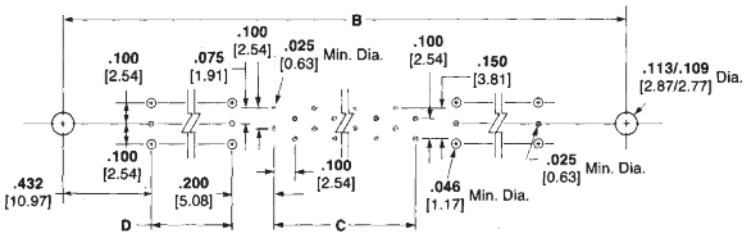

.014 x .019 [0.36 x0.48] Channel Contacts
with Vertical Coaxial Printed Circuit Board Mount Sockets

2 Hybrid Contact Connectors

No. of Box Contact Pos.	Dimensions	
	B	C
128	7.565 192.15	6.300 160.02
122	7.265 184.53	6.000 152.4
118	7.065 179.45	5.800 147.32
108	6.565 166.75	5.300 134.62
98	6.065 154.05	4.800 121.92
88	5.565 141.35	4.300 109.22
78	5.065 128.65	3.800 96.52
68	4.565 115.95	3.300 83.82
58	4.065 103.25	2.800 71.12
48	3.565 90.55	2.300 58.42
38	3.065 77.85	1.800 45.72
28	2.565 65.15	1.300 33.02
18	2.065 52.45	.800 20.32

4 Hybrid Contact Connectors

No. of Box Contact Pos.	Dimensions		
	B	C	D
120	7.565 192.15	5.900 149.86	.200 5.08
110	7.065 179.45	5.400 137.16	.200 5.08
100	6.565 166.75	4.900 124.46	.200 5.08
90	6.065 154.05	4.400 111.76	.200 5.08
80	5.565 141.35	3.900 99.06	.200 5.08
70	5.065 128.65	3.400 86.36	.200 5.08
60	4.565 115.95	2.900 73.66	.200 5.08
50	4.065 103.25	2.400 60.96	.200 5.08
40	3.565 90.55	1.900 48.26	.200 5.08
30	3.065 77.85	1.400 35.56	.200 5.08

6 Hybrid Contact Connectors

No. of Box Contact Pos.	Dimensions		
	B	C	D
112	7.565 192.15	5.500 139.7	.400 10.16
102	7.065 179.45	5.000 127.0	.400 10.16
92	6.565 166.75	4.500 114.3	.400 10.16
82	6.065 154.05	4.000 101.6	.400 10.16
72	5.565 141.35	3.500 88.9	.400 10.16
62	5.065 128.65	3.000 76.2	.400 10.16
52	4.565 115.95	2.500 63.5	.400 10.16
42	4.065 103.25	2.000 50.8	.400 10.16
32	3.565 90.55	1.500 38.1	.400 10.16
22	3.065 77.85	1.000 25.4	.400 10.16

Dimensions are shown for reference purposes only. Specifications subject to change.

Dimensions are in millimeters unless otherwise specified.

USA: +1 800 522 6752
Asia Pacific: +86 0 400 820 6015
UK: +44 800 267 666

For additional support numbers please visit www.te.com

Hybrid Contacts Recommended Printed Circuit Board Layouts (Continued)

Pin Header Assemblies with Hybrid Cavities

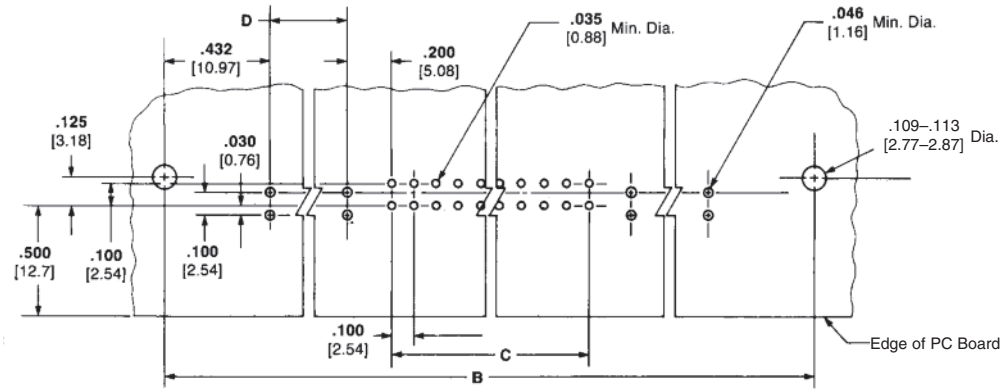

2 Hybrid Contact Connectors

No. of Box Contact Pos.	Dimensions	
	B	C
128	7.565 192.15	6.300 160.02
122	7.265 184.53	6.000 152.4
118	7.065 179.45	5.800 147.32
108	6.565 166.75	5.300 134.62
98	6.065 154.05	4.800 121.92
88	5.565 141.35	4.300 109.22
78	5.065 128.65	3.800 96.52
68	4.565 115.95	3.300 83.82
58	4.065 103.25	2.800 71.12
48	3.565 90.55	2.300 58.42
38	3.065 77.85	1.800 45.72
28	2.565 65.15	1.300 33.02
18	2.065 52.45	.800 20.32

4 Hybrid Contact Connectors

No. of Box Contact Positions	Dimensions		
	B	C	D
120	7.565 192.15	5.900 149.86	.200 5.08
80	5.565 141.35	3.900 99.06	.200 5.08
70	5.065 128.65	3.400 86.36	.200 5.08
40	3.565 90.55	1.900 48.26	.200 5.08
30	3.065 77.85	1.400 35.56	.200 5.08

6 Hybrid Contact Connectors

No. of Box Contact Positions	Dimensions		
	B	C	D
112	7.565 192.15	5.500 139.7	.400 10.16
102	7.065 179.45	5.000 127.0	.400 10.16
92	6.565 166.75	4.500 114.3	.400 10.16
82	6.065 154.05	4.000 101.6	.400 10.16
72	5.565 141.35	3.500 88.9	.400 10.16
62	5.065 128.65	3.000 76.2	.400 10.16
52	4.565 115.95	2.500 63.5	.400 10.16
42	4.065 103.25	2.000 50.8	.400 10.16
32	3.565 90.55	1.500 38.1	.400 10.16
22	3.065 77.85	1.000 25.4	.400 10.16

8 Hybrid Contact Connectors

No. of Box Contact Positions	Dimensions		
	B	C	D
104	7.565 192.15	5.100 129.54	.600 15.24
94	7.065 179.45	4.600 116.84	.600 15.24
84	6.565 166.75	4.100 104.14	.600 15.24
74	6.065 154.05	3.600 91.44	.600 15.24
64	5.565 141.35	3.100 78.74	.600 15.24
54	5.065 128.65	2.600 66.04	.600 15.24
44	4.565 115.95	2.100 53.34	.600 15.24
34	4.065 103.25	1.600 40.64	.600 15.24
24	3.565 90.55	1.100 27.94	.600 15.24
14	3.065 77.85	.600 15.24	.600 15.24

Catalog 1308940
Revised 9-14

www.te.com

Dimensions are shown for reference purposes only. Specifications subject to change.

Dimensions are in millimeters unless otherwise specified.

USA: +1 800 522 6752
Asia Pacific: +86 0 400 820 6015
UK: +44 800 267 666

For additional support numbers please visit www.te.com

Keying Hardware — MIL-C-55302 Qualified

External Keys

Receptacle Key
For use with Receptacles

Kit Part Number 530341-3
Kit includes 2 each of the following:
Keys, passivated stainless steel
Part Number 530341-1
Military Part Number M55302/31-04
Screws, #2-56 .250 [6.35] long

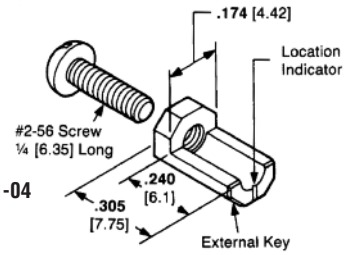

Pin Header Key
For use with 2-row Straddle Mount Pin Headers

Kit Part Number 530341-4[1]
Kit includes 2 each of the following:
Keys, passivated stainless steel
Part Number 530341-1
Military Part Number M55302/31-04
Rivets, nickel plated brass
Part Number 530347-1
Military Part Number M55302/31-05

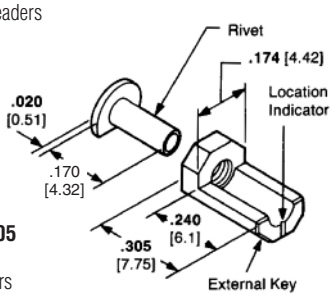

Pin Header Key
For use with 2-, 3-, and 4-row Pin Headers

Kit Part Number 530341-5[1]
Kit includes 2 each of the following:
Keys, passivated stainless steel
Part Number 530341-1
Military Part Number M55302/31-04
Rivets, nickel plated brass
Part Number 530347-3
Military Part Number M55302/31-10

[1]Rivet Clinching Tools:
2-Row Pin Headers—Tool Part Number 91117-1
(See instruction sheet 408-7803)
3-Row Pin Headers—Tool Part Number 91117-3
(See instruction sheet 408-6626)
4-Row Pin Headers—Tool Part Number 92-0800-003

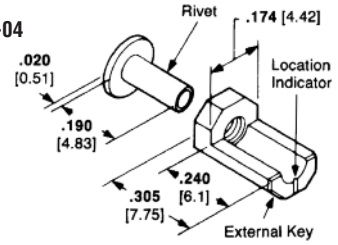

Solid Keying Pin

Solid keying pins are for use on connectors when external keying is not used or on external keyed assemblies when more than 64 keying positions are required. Solid keying pins are not to be installed in the three dual positions at each end of the connector.

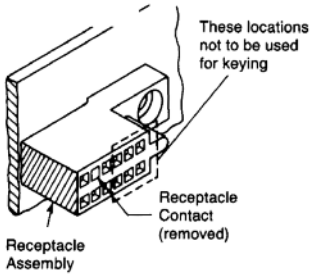

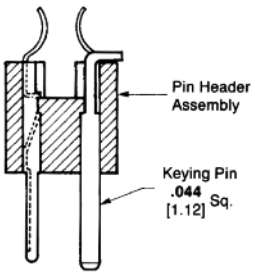

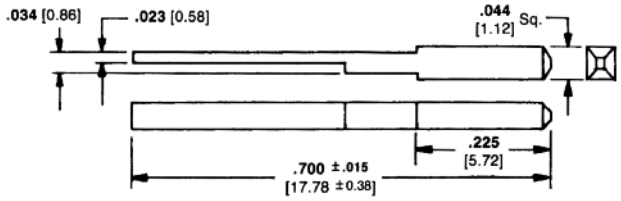

Material: Nickel plated brass
Part Number 530328-2
Military Part Number M55302/31-03

Assembly Instructions:
1. Remove pin and receptacle from desired keying locations.
2. Insert keying pin in pin header, secure by bending rear of pin over outside edge of housing, and trim excess material.

Guide Keys

Guide Keying Pin and Insert
For use with 2-row Receptacles and 2-row Straddle Mount Pin Headers

Kit Part Number 531715-1[1]
Kit includes 2 each of the following:
Guide keying pin, passivated stainless steel
Part Number 531713-1
Nut, #2-56
Part Number 23174-1
Guide keying insert,
passivated stainless steel
Part Number 531714-1
Rivet, nickel plated brass
Part Number 530347-9

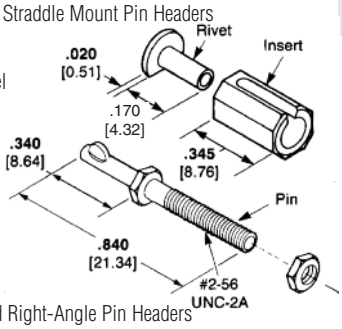

Guide Keying Pin and Insert
For use with 2- and 3-row Receptacles and Right-Angle Pin Headers

Kit Part Number 531715-2[1]
Kit includes 2 each of the following:
Guide keying pin, passivated stainless steel
Part Number 531713-1
Nut, #2-56
Part Number 23174-1
Guide keying insert, passivated
stainless steel
Part Number 531714-1
Rivet, nickel plated brass
Part Number 530347-8

[1]Rivet Clinching Tools:
2-Row Pin Headers—Tool Part Number 91117-1
(See instruction sheet 408-7803)
3-Row Pin Headers—Tool Part Number 91117-4
(See instruction sheet 408-6627)

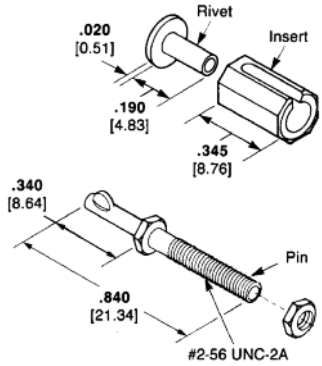

Guide Pin/Insert

Guide Pin
Passivated stainless steel

A	Part No.
.400 10.16	530345-1
.680 17.27	—
.750 19.05	530345-3

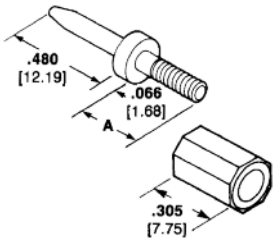

Guide Insert
Passivated stainless steel
Part Number 530346-1
(Consult TE Connectivity for mounting recommendations)

Keying Sleeve

Keying sleeves, like solid keying pins, are used as an alternative to external keys or when additional keying is required. When the keying sleeve is used on the pin header, the contact must be removed from the receptacle assembly and the cavity reamed to .062 [1.57] diameter.

Material — Nickel plated brass

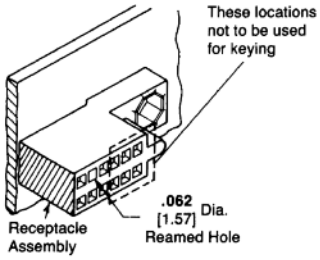

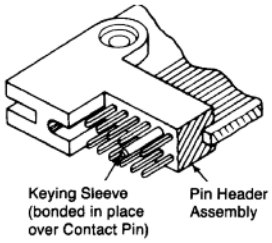

L	MIL-Part No. M55302/	Part No.
.305 7.75	31-01	583254-3
.250 6.35	31-02	583254-4

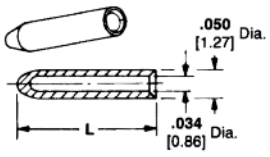

Dimensions are shown for reference purposes only. Specifications subject to change.

Dimensions are in millimeters unless otherwise specified.

USA: +1 800 522 6752
Asia Pacific: +86 0 400 820 6015
UK: +44 800 267 666

For additional support numbers please visit www.te.com

Replacement Contacts — MIL-C-55302 Qualified

Plating Code

Contacts are plated in various thicknesses. These thicknesses are coded in the charts as follows:

1. — .000030 [0.00076] gold in the contact area, .000100 [0.00254] tin-lead on the tail over .000050 [0.00127] nickel on the entire contact.
2. — .000050 [0.00127] gold in the contact area, .000100 [0.00254] tin-lead on the tail over .000050 [0.00127] nickel on the entire contact.
3. — .000030 [0.00076] gold in the contact area, .000100 [0.00254] tin-lead on the tail over .000030 [0.00076] nickel on the entire contact.
4. — .000050 [0.00127] gold over .000030 [0.00076] nickel.
5. — .000050 [0.00127] gold in the contact area, .000100 [0.00254] tin-lead on the tail over .000030 [0.00076] nickel on the entire contact.
6. — .000030 [0.00076] gold in the contact area, in accordance with MIL-C-55302, .000100 [.00254] tin-lead on the tails over .000030 [0.00076] nickel on the entire contact.
7. — .000050 [0.00127] gold in the contact area, in accordance with MIL-C-55302 .000100 [0.00254] tin-lead on tails over .000050 [0.00127] nickel on the entire contact.

Contact Extraction

Pin Contacts
Extraction Tool
Part Number 91156-1

Receptacle Contacts
Extraction Tool
Part Number 91035-1
Military Part Number M81969/9-01

Posted Receptacle Contacts
Contact for Rack Mounting
Extraction Tool
Part Number 1-265871-7
(Extraction Tool Instruction sheet 408-2636)

Contact for PC Board
No tool needed — After de-soldering, extract by pressing on post end of contact.

Pin Contacts

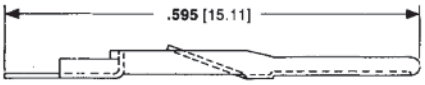

For Straddle Mount Pin Headers

Plating Code	AMP Part No.
1	202947-2
2	202947-3

Receptacle Contacts

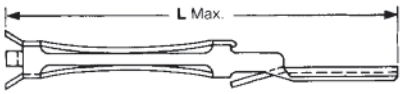

.014 x .019 [0.36 x 0.48]
Channel Contact

Plating Code	AMP Part No.
3	202946-1
4	202946-7

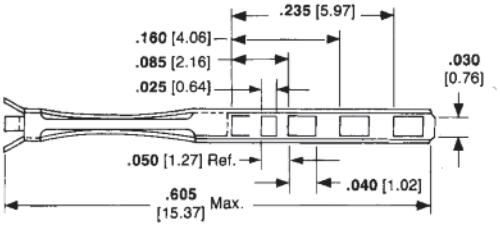

Solder Eyelet Contact
(Max. Wire Size, 26 AWG [0.15mm])

Plating Code	AMP Part No.	
	2-Row Connectors	3-Row Connectors
5	202946-7	202946-5
6	202946-1	202946-2

L Length Equals .540 Max. for 2-Row .619 Max for 3-Row

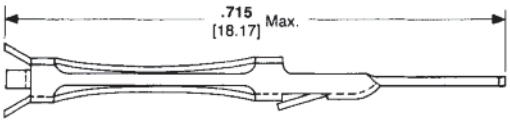

.010 x .020 [0.25 x 0.51]
Posted Contact[1]

Plating Code	MIL-Part No.	AMP Part No.
5	—	—
6	—	—
7	M55302/32-01	583218-3

For 2-Row Only

[1]1.010 x .020 [0.25 x 0.51] posted contacts are used as replacement contacts in card extender assemblies.

Posted Receptacle Contacts

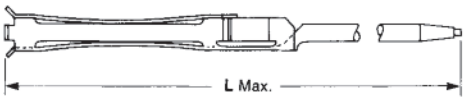

Wrap-Type Contact for Rack Mounting
Double Latch .025 x .025 [0.64 x 0.64] Post

Wrap-Type Contact for PC Mounting
Single Latch .022 x .027 [0.56 x 0.69] Post

No. Terminations	Dim. L	For Rack Mount (Double Latch)			For PC Mount (Single Latch)		
		Plating Code 3	Plating Code 4		Plating Code 3	Plating Code 4	
		Part No.	MIL-Part No.	Part No.	Part No.	MIL-Part No.	Part No.
1 High	.795 20.0	446629-6	M55302/32-05	1-446629-4	—	M55302/32-02	2-583812-6
2 High	.955 24.26	446629-9	M55302/32-06	1-446629-6	—	M55302/32-03	2-583812-8
3 High	1.115 28.32	1-446629-2	M55302/32-07	1-446629-8	583812-9	M55302/32-04	3-583812-0

Dimensions are shown for reference purposes only. Specifications subject to change.

Dimensions are in millimeters unless otherwise specified.

USA: +1 800 522 6752
Asia Pacific: +86 0 400 820 6015
UK: +44 800 267 666

For additional support numbers please visit www.te.com

Vertical Receptacles with ACTION PIN Posts and Solder Post Contacts

Product Facts

- **Horizontal motherboard stacking capability**
- **Mateable with AMP-HDI pin assemblies**
- **4-beam box-type receptacle contact design provides four areas of contact per connection**
- **Available with ACTION PIN contacts or solder posts**
- **Inserts into standard .100 [2.54] grid**
- **Keying system provides 64 combinations without loss of contact count**
- **High temperature material permits vapor phase reflow soldering**
- **Low mating forces**
- **Highly economical for quality and density**
- **Product Specification 108-9003**

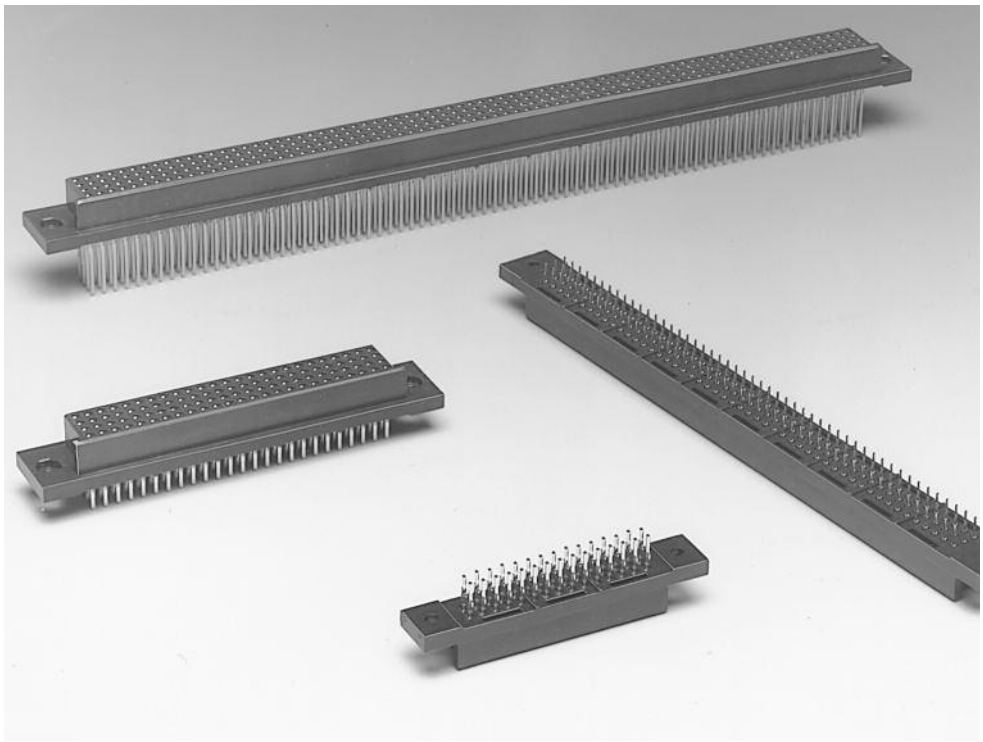

TE Connectivity vertical receptacle assemblies, when mated with AMP-HDI pin assemblies, permit horizontal stacking of motherboards. They are available with two, three or four rows of contacts on a .100 [2.54] grid and with a choice of either ACTION PIN posts or solder posts.

The required PC board hole sizes and patterns of these receptacle assemblies allow space-efficient circuitry layout. The box-type, quad redundant receptacle contacts with selective gold plating in the contact area deliver high reliability while maintaining low mating force.

In addition, contact and housing configurations prevent pin damage if a long connector is “peeled” apart from one end.

Features such as 64-combination keying and high temperature housing materials add to the appeal of TE vertical receptacle assemblies.

These connectors are highly specialized products for applications demanding their unusual characteristics.

Catalog 1308940
Revised 9-14

www.te.com

Dimensions are shown for reference purposes only. Specifications subject to change.

Dimensions are in millimeters unless otherwise specified.

USA: +1 800 522 6752
Asia Pacific: +86 0 400 820 6015
UK: +44 800 267 666

For additional support numbers please visit www.te.com

Horizontal Motherboard Stacking (Not Recommended for MFBL Applications)

Multiple stacking of motherboards on backplanes is readily achieved using TE Connectivity vertical receptacle assemblies and AMP-HDI pin assemblies. This unique board-to-board interconnection concept eliminates exposed contacts inherent with open pin fields. Vertical receptacle assemblies with either ACTION PIN posts or solder posts provide the same low .600 [15.24] stack height between boards.

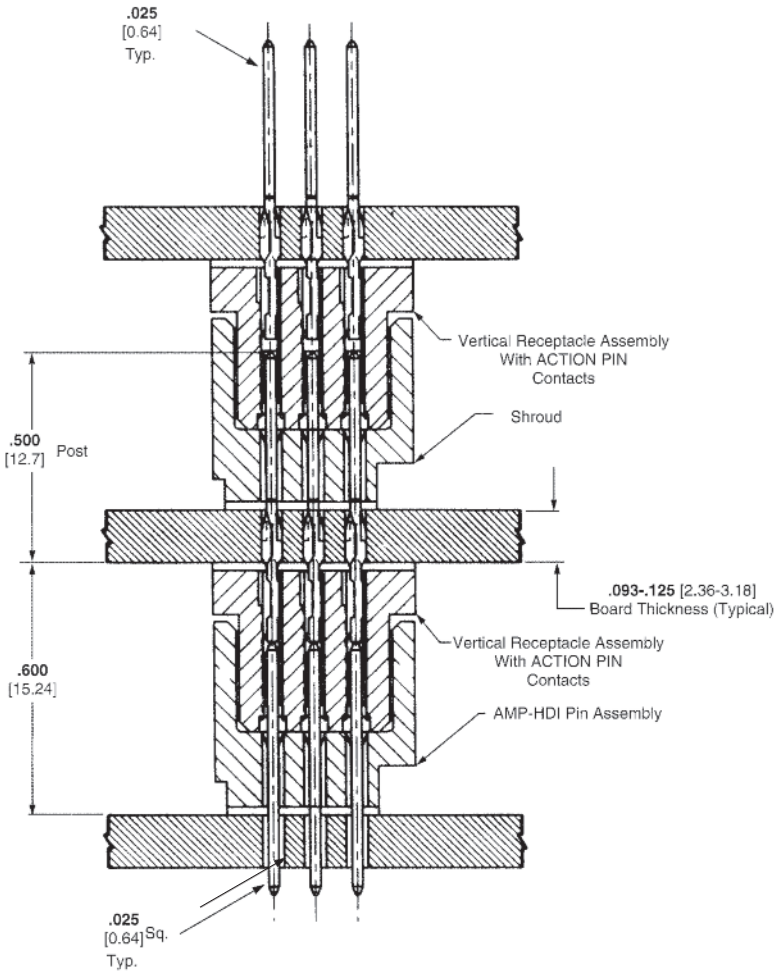

Note: The .600 [15.24] board-to-board stacking height is also achieved using vertical receptacle assemblies with solder posts.

Catalog 1308940
Revised 9-14

www.te.com

Dimensions are shown for reference purposes only. Specifications subject to change.

Dimensions are in millimeters unless otherwise specified.

USA: +1 800 522 6752
Asia Pacific: +86 0 400 820 6015
UK: +44 800 267 666

For additional support numbers please visit www.te.com

Four-Row Vertical Receptacle Assemblies Without Guide Holes

ACTION PIN Posts and Solder Posts

Material and Finish

Housing — Brown glass-filled polyphenylene sulfide

Contacts — ACTION PIN (phosphor bronze), solder (beryllium copper), plated as follows:

A .000030 [0.00076] gold in contact area, tin-lead on posts, with entire contact underplated .000050-.000100 [0.00127-0.00254] nickel

B Gold flash over .000050-.000100 [0.00127-0.00254] nickel on entire contact, with .000030 [0.00076] gold on contact area and for .200 [5.08] from tip of ACTION PIN post

C .000050 [0.00127-0.00254] gold in contact area, tin-lead on posts, with entire contact underplated .000050-.000100 [0.00127-0.00254] nickel

D RoHS Part Numbers same as A plating except for tin on posts

Related Product Data

Mateable Connectors —

Vertical Pin Headers —
Base numbers 533435, 533254, 533270, 532448, 532436

90° Pin Headers —
Base numbers 533444, 533286

Consult TE Connectivity for part number details.

Accessories —

Keys — page 1-92

Jackscrews — page 1-93

PCB Hole Layouts — page 1-88

Application Tooling — page 1-91

Technical Documents —
Product Specifications
108-9069, 108-26003
Application Specification
114-9010
Instruction Sheets 408-6927, 408-6979, 408-6989, 408-9185

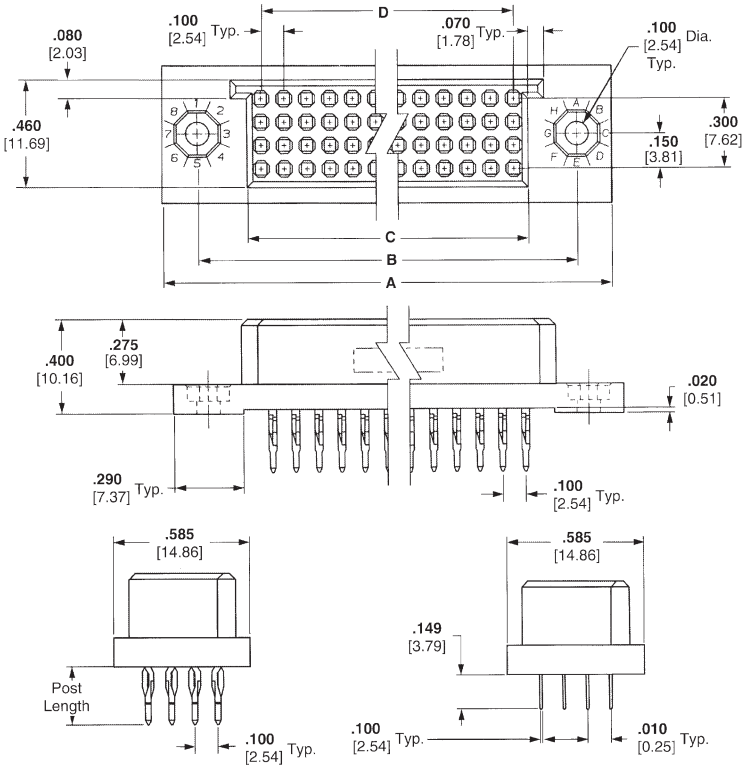

ACTION PIN Posts — Solder Posts

No. of Pos.	Dimensions A	Dimensions B	Dimensions C	Dimensions D	Contact Finish	Part Numbers* ACTION PIN Posts .500 [12.7] Length	ACTION PIN Posts .250 [6.35] Length	Solder Posts .149 [3.78] Length	Solder Posts .180 [4.57] Length
300	**8.250** 209.55	**7.950** 201.93	**7.524** 191.11	**7.400** 187.95	A	—	1-533427-2	1-533285-2	—
					B	1-533656-2	—	—	—
					D	—	—	6-533285-2	—
280	**7.750** 196.85	**7.450** 189.23	**7.024** 178.41	**6.900** 175.26	A	—	—	1-533285-1	—
260	**7.250** 184.15	**6.950** 176.53	**6.524** 165.71	**6.400** 162.56	A	—	1-533427-0	1-533285-0	—
					D	—	—	6-533285-0	—
240	**6.750** 171.45	**6.450** 163.83	**6.024** 153.01	**5.900** 149.86	A	—	533427-9	533285-9	—
					B	533656-9	—	—	—
					D	—	—	5-533285-9	—
232	**6.550** 166.37	**6.250** 158.75	**5.824** 147.93	**5.700** 144.78	A	—	—	—	533499-2
					D	—	—	—	5-533499-2
216	**6.150** 156.21	**5.850** 148.59	**5.424** 137.77	**5.300** 134.62	A	—	—	—	533499-1
					D	—	—	—	5-533499-1
200	**5.750** 146.05	**5.450** 138.43	**5.024** 127.61	**4.900** 124.46	A	—	—	533285-7	—
					B	533656-7	—	—	—
					D	—	—	5-533285-7	—
180	**5.250** 133.35	**4.950** 125.73	**4.524** 114.91	**4.400** 111.76	B	533656-6	—	533285-6	—
					D	—	—	5-533285-6	—
160	**4.750** 120.65	**4.450** 113.03	**4.024** 102.21	**3.900** 99.06	A	—	533427-5	533285-5	533492-1
					C	—	—	650844-1	—
					D	—	—	5-533285-5	—
140	**4.250** 107.95	**3.950** 100.33	**3.524** 89.51	**3.400** 86.36	A	—	—	533285-4	—
128	**3.950** 100.33	**3.650** 92.71	**3.224** 81.89	**3.100** 78.74	A	—	533427-3	533285-3	—
					D	—	—	5-533285-3	—
100	**3.250** 82.55	**2.950** 74.93	**2.524** 64.11	**2.400** 60.96	A	533694-1	533427-1	533285-1	—
					B	533656-1	—	—	—
					D	—	—	5-533285-1	—

*Other connector sizes and solder post lengths can be made available. Consult TE Connectivity.

Dimensions are shown for reference purposes only. Specifications subject to change.

Dimensions are in millimeters unless otherwise specified.

USA: +1 800 522 6752
Asia Pacific: +86 0 400 820 6015
UK: +44 800 267 666

For additional support numbers please visit www.te.com

Four-Row Vertical Receptacle Assemblies Without Guide Holes (Continued)

Material and Finish

Housing — Natural (brown) polyphenylene sulfide

Contacts — Beryllium copper, .000050–.000100 [0.00127–0.00254] nickel underplate over .000030 [0.00076] gold in contact area, tin-lead plated solder tails

Solder Posts .149 [3.78] Length
Mounting Ears Have .285 [7.24] C'Bore x .080 [2.03] Deep

No. of Pos.	Dimensions A	B	C	D	Contact Finish	Part No.
192	**5.600** 142.24	**5.450** 133.35	**4.824** 122.53	**4.700** 119.38	A	533484-1
68	**2.500** 63.50	**2.150** 54.61	**1.724** 43.79	**1.600** 40.64	A	533484-2

With Special Mounting Ears

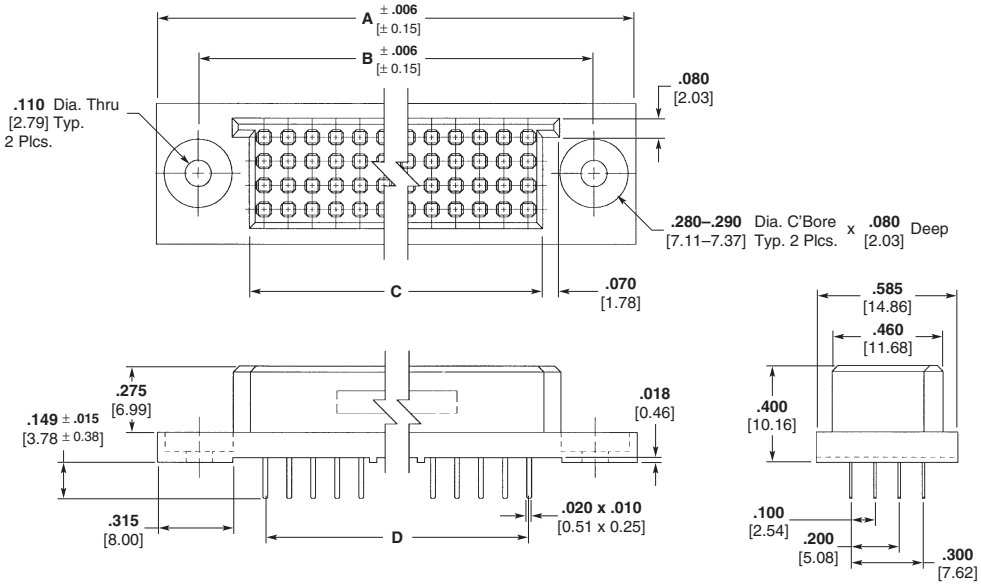

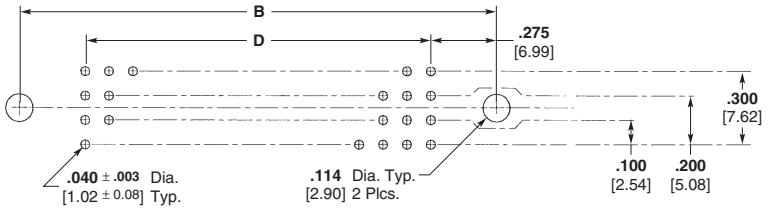

Recommended PC Board Layout

Without Mounting Ears

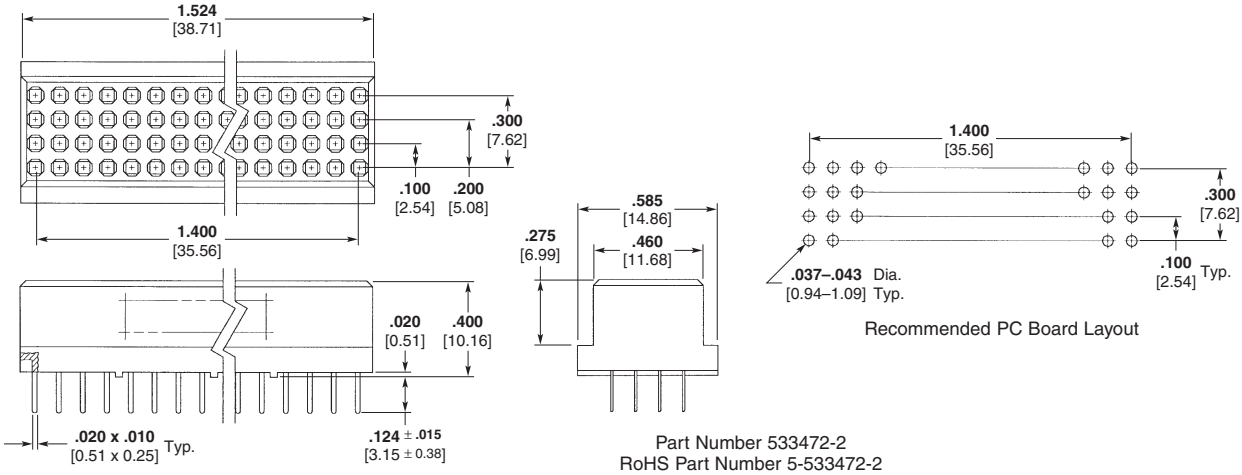

Recommended PC Board Layout

Part Number 533472-2
RoHS Part Number 5-533472-2
60 Position

Three-Row Vertical Receptacle Assemblies Without Guide Holes

ACTION PIN Posts and Solder Posts

Material and Finish

Housing — Brown glass-filled polyphenylene sulfide
Contacts — ACTION PIN (phosphor bronze), solder (beryllium copper), plated as follows:

A .000030 [0.00076] gold in contact area; tin-lead on posts, with entire contact underplated .000050-.000100 [0.00127-0.00254] nickel

B Gold flash over .000050-.000100 [0.00127-0.00254] nickel on entire contact, with .000030 [0.00076] gold on contact area and for .200 [5.08] from tip of ACTION PIN post

C RoHS Part Numbers same as A plating except for tin on posts

Related Product Data

Mateable Connectors —
Vertical Pin Headers —
Base numbers 532432, 533061, 533093, 532447, 532433
90° Pin Headers —
Base numbers 533420, 533288
Consult TE Connectivity for part number details.
Accessories —
Keys — page 1-92
Jackscrews — page 1-93
PCB Hole Layouts — page 1-89
Application Tooling — page 1-91
Technical Documents —
Product Specifications
108-9069, 108-26003
Application Specification 114-9010
Instruction Sheets 408-6927, 408-6981, 408-6989, 408-9185

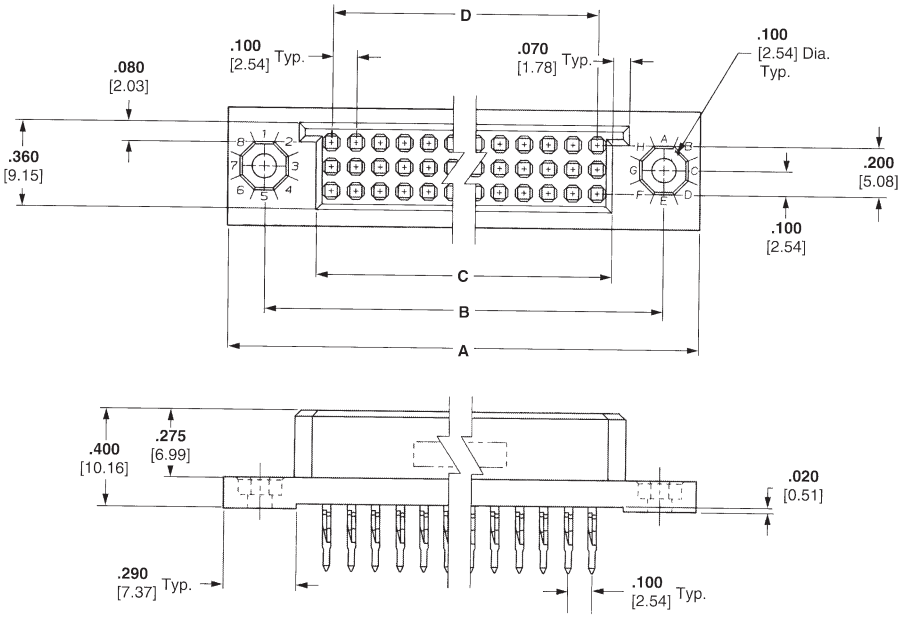

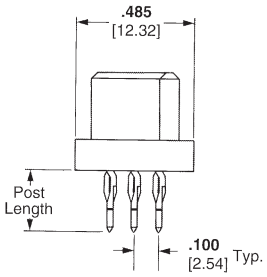

ACTION PIN Posts

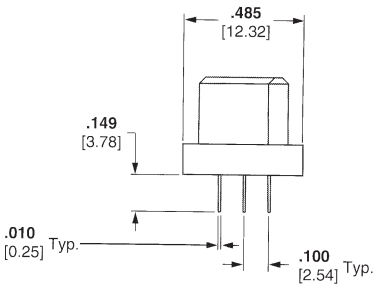

Solder Posts

No. of Pos.	Dimensions A	Dimensions B	Dimensions C	Dimensions D	Contact Finish	Part Numbers* ACTION PIN Posts .250 [6.35] Length	Part Numbers* Solder Posts .149 [3.78] Length	Part Numbers* Solder Posts .180 [4.57] Length
174	**6.550** 166.37	**6.250** 158.75	**5.824** 147.93	**5.700** 144.78	A	—	—	533495-3
					C	—	—	5-533495-3
150	**5.750** 146.05	**5.450** 138.43	**5.024** 127.61	**4.900** 124.46	A	533657-7	533287-7	—
					B	—	—	533495-2
					C	—	5-533287-7	5-533495-2
120	**4.750** 120.65	**4.450** 113.03	**4.024** 102.21	**3.900** 99.06	A	533657-5	533287-5	—
105	**4.250** 101.95	**3.950** 100.33	**3.524** 89.51	**3.400** 86.36	A	—	533287-4	—
					C	—	5-533287-4	—
96	**3.950** 100.33	**3.650** 92.71	**3.224** 81.89	**3.100** 78.74	A	—	533287-3	—
					C	—	5-533287-3	—

*Other connector sizes and solder post lengths can be made available, consult TE Connectivity.

Dimensions are shown for reference purposes only. Specifications subject to change.

Dimensions are in millimeters unless otherwise specified.

USA: +1 800 522 6752
Asia Pacific: +86 0 400 820 6015
UK: +44 800 267 666

For additional support numbers please visit www.te.com

Two-Row Vertical Receptacle Assemblies Without Guide Holes

ACTION PIN Posts and Solder Posts

Material and Finish

Housing — Brown glass-filled polyphenylene sulfide
Contacts — ACTION PIN (phosphor bronze), solder (beryllium copper), plated as follows:

A .000030 [0.00076] gold in contact area, tin-lead on posts, with entire contact underplated .000050-.000100 [0.00127-0.00254] nickel

B Gold flash over .000050-.000100 [0.00127-0.00254] nickel on entire contact, with .000030 [0.00076] gold on contact area and for .200 [5.08] from tip of ACTION PIN post

C RoHS Part Numbers same as A plating except for tin on posts

Related Product Data

Mateable Connectors —
Vertical Pin Headers —
Base numbers 533060, 532446, 532430, 532091, 532430
90° Pin Headers —
Base numbers 533515, 533295
Consult TE Connectivity for part number details.

Accessories —
Keys — page 1-92
Jackscrews — page 1-93
PCB Hole Layouts — page 1-89
Application Tooling — page 1-91
Technical Documents —
Product Specifications 108-9069, 108-26003
Application Specification 114-9010
Instruction Sheets 408-6927, 408-6980, 408-6989, 408-9185

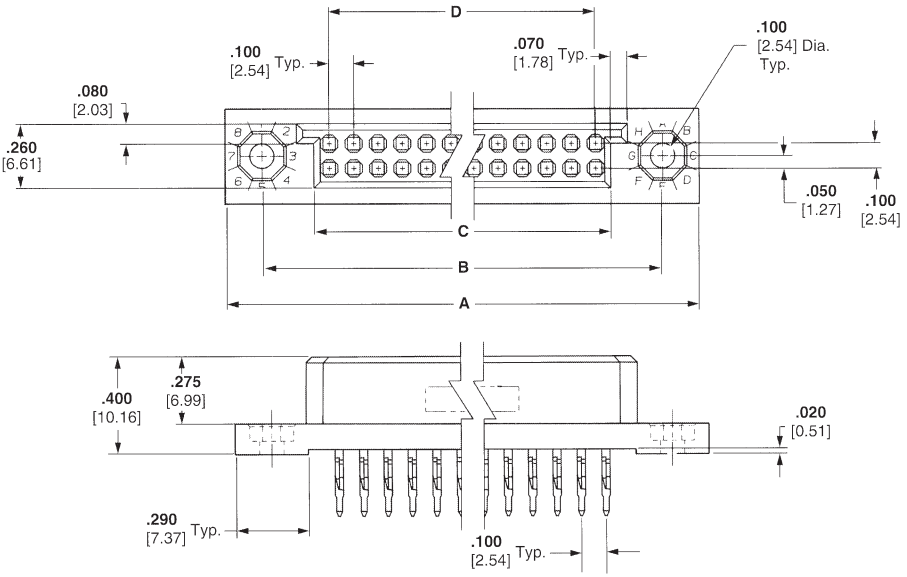

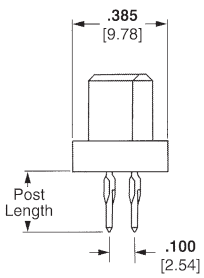

ACTION PIN Posts

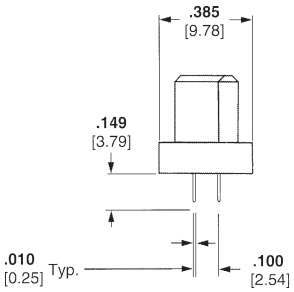

Solder Posts

No. of Pos.	Dimensions A	Dimensions B	Dimensions C	Dimensions D	Contact Finish	Part Numbers* ACTION PIN Posts .500 [12.7] Length	Part Numbers* ACTION PIN Posts .250 [6.35] Length	Part Numbers* Solder Posts .149 [3.78] Length
200	**10.750** 273.05	**10.450** 265.43	**10.024** 254.61	**9.900** 251.46	A	—	1-533650-9	—
80	**4.750** 120.65	**4.450** 113.03	**4.024** 102.21	**3.900** 99.06	B	533693-7	—	—
60	**3.750** 95.25	**3.450** 87.63	**3.024** 76.81	**2.900** 73.66	A	—	—	533289-5
					C	—	—	5-533289-5
40	**2.750** 69.85	**2.450** 62.23	**2.024** 51.41	**1.900** 48.26	A	533693-3	—	533289-3
20	**1.750** 44.45	**1.450** 36.83	**1.024** 26.10	**.900** 22.86	A	—	—	533289-1

*Other connector sizes and solder post lengths can be made available, consult TE Connectivity.

Catalog 1308940
Revised 9-14

www.te.com

Dimensions are shown for reference purposes only. Specifications subject to change.

Dimensions are in millimeters unless otherwise specified.

USA: +1 800 522 6752
Asia Pacific: +86 0 400 820 6015
UK: +44 800 267 666

For additional support numbers please visit www.te.com

Recommended Printed Circuit Board Hole Layouts

Four-Row Receptacle Assemblies Without Guide Holes

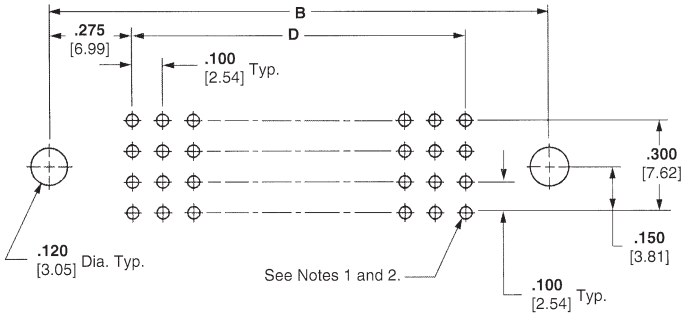

Vertical Receptacle Assemblies with ACTION PIN Contacts and Solder Posts

Notes: 1. ACTION PIN posts require .093 [2.36] min. thick PC board. For ACTION PIN post plated-through hole specifications, see page 1-90.
2. Plated-through hole diameter for solder posts is .037-.043 [0.94-1.09]; recommended pad diameter is hole diameter plus .020 [0.51].

No. of Pos.	Dimensions B	Dimensions D
300	**7.950** 201.93	**7.400** 187.96
280	**7.450** 189.23	**6.900** 175.26
260	**6.950** 176.53	**6.400** 162.56
240	**6.450** 163.83	**5.900** 149.86
232	**6.250** 166.37	**5.700** 144.78
216	**5.850** 148.59	**5.300** 134.62
200	**5.450** 138.43	**4.900** 124.46
180	**4.950** 125.73	**4.400** 111.76
160	**4.450** 113.03	**3.900** 99.06
140	**3.950** 100.33	**3.400** 86.36
128	**3.650** 92.71	**3.100** 78.74
120	**3.450** 87.63	**2.900** 73.66
100	**2.950** 74.93	**2.400** 60.96
40	**1.450** 36.83	**.900** 22.86

Catalog 1308940
Revised 9-14

www.te.com

Dimensions are shown for reference purposes only. Specifications subject to change.

Dimensions are in millimeters unless otherwise specified.

USA: +1 800 522 6752
Asia Pacific: +86 0 400 820 6015
UK: +44 800 267 666

For additional support numbers please visit www.te.com

Recommended Printed Circuit Board Hole Layouts (Continued)

Three-Row Receptacle Assemblies Without Guide Holes

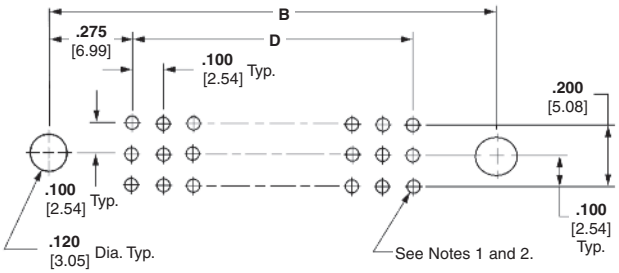

Vertical Receptacle Assemblies with ACTION PIN Contacts and Solder Posts

Notes: 1. ACTION PIN posts require .093 [2.36] min. thick PC board. For ACTION PIN post plated-through hole specifications, see page 1-90.
2. Plated-through hole diameter for solder posts is .037-.043 [0.94-1.09]; recommended pad diameter is hole diameter plus .020 [0.51].

No. of Pos.	Dimensions	
	B	D
174	**6.250** 158.75	**5.700** 144.78
150	**5.450** 138.43	**4.900** 124.46
120	**4.450** 113.03	**3.900** 99.06
105	**3.950** 100.33	**3.400** 86.36
96	**3.650** 92.71	**3.100** 78.74

Two-Row Receptacle Assemblies Without Guide Holes

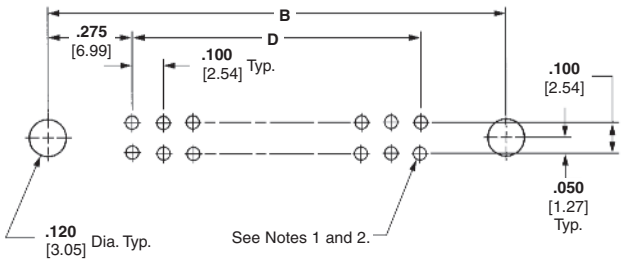

Vertical Receptacle Assemblies with ACTION PIN Contacts and Solder Posts

Notes: 1. ACTION PIN posts require .093 [2.36] min. thick PC board. For ACTION PIN post plated-through hole specifications, see page 1-90.
2. Plated-through hole diameter for solder posts is .037-.043 [0.94-1.09]; recommended pad diameter is hole diameter plus .020 [0.51].

No. of Pos.	Dimensions	
	B	D
200	**10.450** 265.43	**9.900** 251.46
80	**4.450** 113.03	**3.900** 99.06
60	**3.450** 87.63	**2.900** 73.66
40	**2.450** 62.23	**1.900** 48.26
30	**1.950** 49.53	**1.400** 35.56
20	**1.450** 36.83	**.900** 22.86

Catalog 1308940
Revised 9-14

www.te.com

Dimensions are shown for reference purposes only. Specifications subject to change.

Dimensions are in millimeters unless otherwise specified.

USA: +1 800 522 6752
Asia Pacific: +86 0 400 820 6015
UK: +44 800 267 666

For additional support numbers please visit www.te.com

ACTION PIN Press-Fit Contacts

ACTION PIN contacts provide a reliable press-fit connection. Localized pressure in the interface area promotes oxide breakthrough and prevents corrosion in harsh environments to provide a reliable connection. Also, radial and axial distortion are controlled to meet today's standards for multilayer board applications.

PC Board Thickness

ACTION PIN contacts are designed for use in a variety of PC board thicknesses. However, certain ACTION PIN contacts are to be used in specific ranges of board thicknesses. For optimum performance, the recommended board thicknesses provided with the connector being used must be followed.

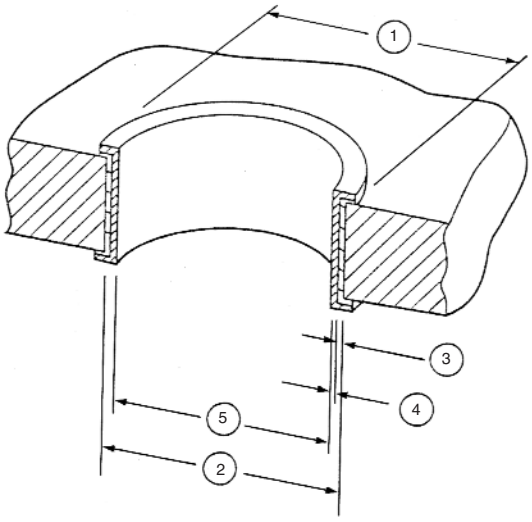

1 Annular Ring (See Note)
2 Drilled Hole
3 Copper Thickness
4 Tin-Lead Thickness
5 Plated-Through Hole

ACTION PIN Contact/PC Board Applications

Connector Type	ACTION PIN Contact Material Thickness	Drilled Hole Diameter	Plating Thicknesses: Copper *	Plating Thicknesses: Tin-Lead	Plated-Through Hole Diameter	Radial Hole Distortion: Average	Radial Hole Distortion: Maximum
Vertical Receptacle Assemblies	**.025** 0.64	**.0453±.001** 1.151±0.03	**.001-.003** 0.03-0.08	**.0003** Min. 0.008	**.037-.043** 0.94-1.09	Not Specified	Not Specified

*Maximum hardness of copper layer is 150 Knoop
Note: Recommended annular ring diameter is hole diameter plus .020 [0.51]

Dimensions are shown for reference purposes only. Specifications subject to change.

Dimensions are in millimeters unless otherwise specified.

USA: +1 800 522 6752
Asia Pacific: +86 0 400 820 6015
UK: +44 800 267 666

For additional support numbers please visit www.te.com

Application Tooling

Receptacle assemblies with ACTION PIN contacts allow high speed, solderless backplane construction through reliable press-fit application. Press fitting connectors to printed circuit boards requires special seating tools which transfer application force directly to the contacts.

Each spring-loaded seating tool features a push plate, push pin housing, and locator housing. The push plate provides the bearing surface for the application tooling which forces the ACTION PIN posts into the PC board. The push pin housing holds the same number of push pins as the connector size (no. of contact positions). The locator housing fits over the connector body to align the components for proper seating. Compression springs (approximately one for every seven contacts) and guide pins (one at each end) provide tool alignment and stability.

Board support fixtures are used to support PC boards or backplanes while connectors are being assembled to the boards or backplanes. TE Connectivity Instruction Sheet 408-6927 provides recommendations for manufacturing board support fixtures.

Force applied to the tool to seat the connectors can be provided by the TE seating machines shown below, or by commercially available hand-operated arbor presses such as Greenerd 3A or 3B. Refer to Instruction Sheet 408-9027 for use of TE adapter kits with these presses.

For tooling information, contact Technical Support.

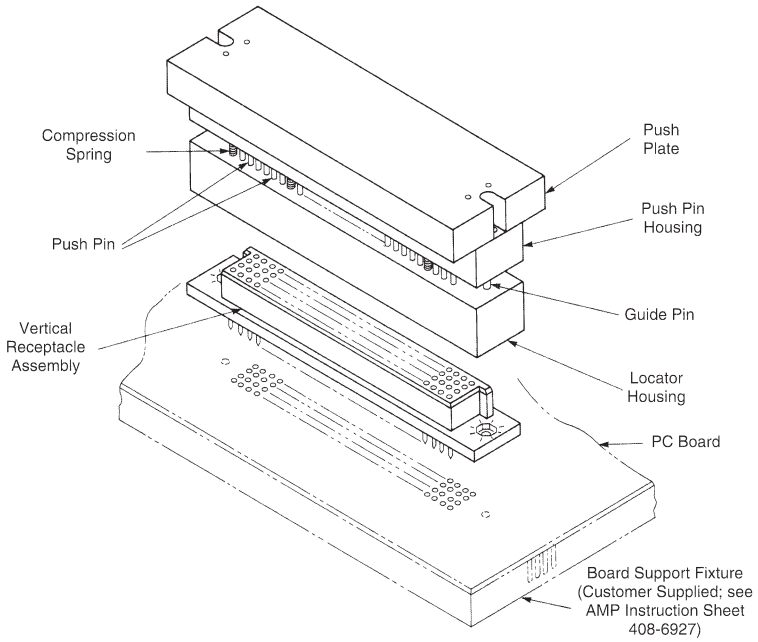

Receptacle Assembly Configuration			Seating Tool Numbers
No. of Rows	No. of Pins/Row	Total No. of Pins	
Four (without Guide Holes)	25	100	58279-2
	30	120	58279-4
	32	128	58279-8
	35	140	58279-9
	45	180	58279-5
	60	240	58279-3
	65	260	58279-7
	67	268	58279-1
	75	300	58279-6
Three (without Guide Holes)	32	96	58277-2
	33	99	58277-3
	50	150	58277-4
	67	201	58277-1
Two (without Guide Holes)	15	30	58280-4
	28	56	58280-1
	35	70	58280-6
	60	120	58280-5
	67	134	58280-2
	70	140	58280-3

MANTA Servo Electric Press

Electric Servo Press created to satisfy the increasing need for a "Low Cost" method of controlled connector pressing into today's complex circuit boards. The MANTA can precisely control force and speed of each pressing cycle. Quality feedback is accessible in the form of SPC analysis, display, and reports. The "C-Frame" design, with a 12-inch throat depth, accommodates a wide range of smaller printed circuit boards.

BMEP-3T/5T Bench Top Electric Servo Press (3 or 5 ton)

PC-controlled, cost effective bench mounted machine for semi-automatic pressing of ACTION PIN (Compliant Pin, Pressfit) connectors into printed circuit boards. The pressing force is delivered by an all-electric servomotor, providing precise control of force, speed, and seating height. A touch screen monitor provides a user-friendly interface and a bar code scanner provides PCB serial number input for product tracking.

Dimensions are shown for reference purposes only. Specifications subject to change.

Dimensions are in millimeters unless otherwise specified.

USA: +1 800 522 6752
Asia Pacific: +86 0 400 820 6015
UK: +44 800 267 666

For additional support numbers please visit www.te.com

Keying Hardware and Applications

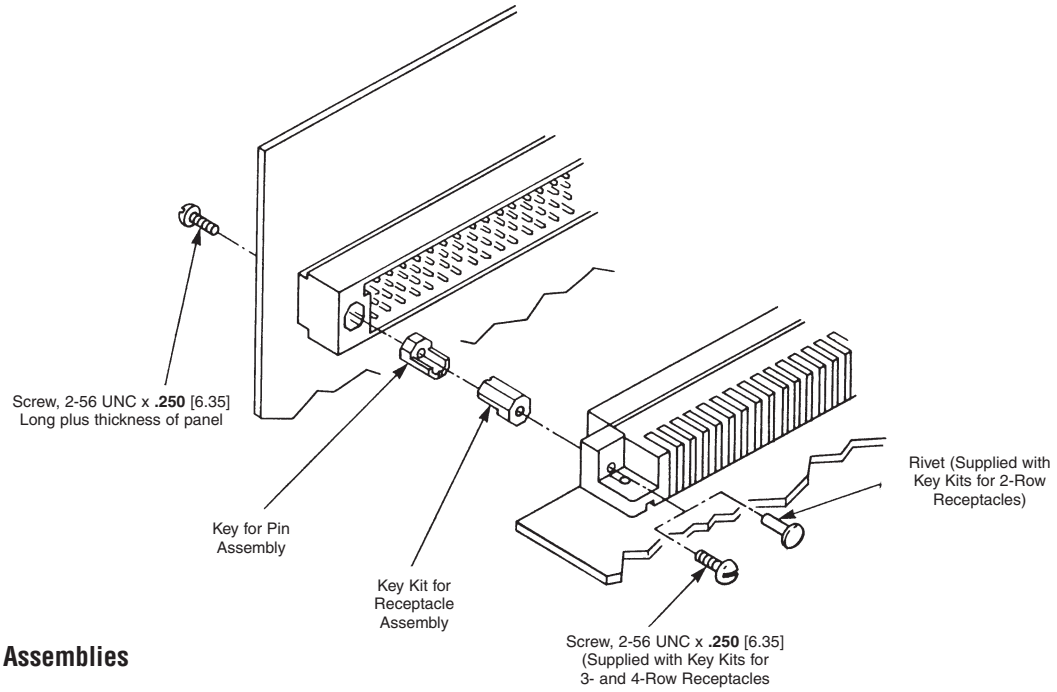

Keys for Pin Assemblies

Material and Finish

Passivated Stainless Steel

Key Part Number 530341-1

Key Part Number 530341-6
(contains 2 per package)

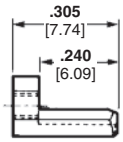

Note: Customer must supply screws; .250 [6.35] min. long, plus thickness of panel.

Key Kits for Three- and Four-Row Receptacles

Material and Finish

Key — Passivated Stainless Steel

Screw — Passivated Stainless Steel

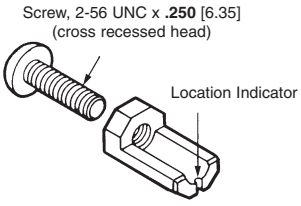

Kit Number 530341-7
(includes 2 keys and 2 screws)

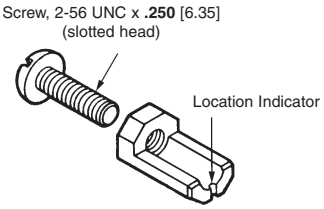

Kit Number 530341-3
(includes 2 keys and 2 screws)

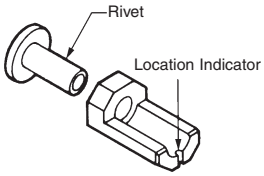

Kit Number 530341-5
(includes 2 keys and 2 rivets)
Note: Use Clinching Tool Number 91117-3
(See Instruction Sheet 408-6626.)

Key Kit for Two-Row Receptacles

Material and Finish

Key — Passivated Stainless Steel

Rivet — Nickel plated brass

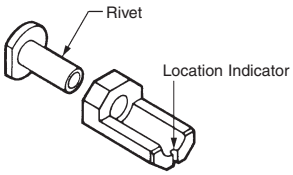

Kit Number 530341-4
(includes 2 keys and 2 rivets)
Note: Use Clinching Tool Number 91117-5
(See Instruction Sheet 408-9178.)

Dimensions are shown for reference purposes only. Specifications subject to change.

Dimensions are in millimeters unless otherwise specified.

USA: +1 800 522 6752
Asia Pacific: +86 0 400 820 6015
UK: +44 800 267 666

For additional support numbers please visit www.te.com

Mating Hardware and Applications

Jackscrews for Three- and Four-Row Connectors Only

See Instruction Sheet 408-6909.

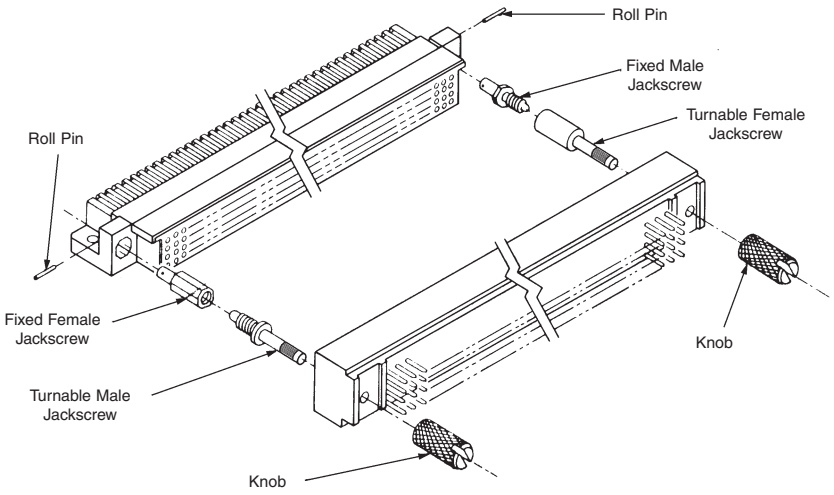

Dimension L	Material and Finish	Fixed Female (Threaded) Part Numbers
.750 19.05	Plain Stainless Steel	533424-1
	Passivated Stainless Steel	533424-2
.625 15.88	Plain Stainless Steel	533424-3
	Passivated Stainless Steel	533424-4
.525 14.61	Plain Stainless Steel	533424-5
	Passivated Stainless Steel	533424-6

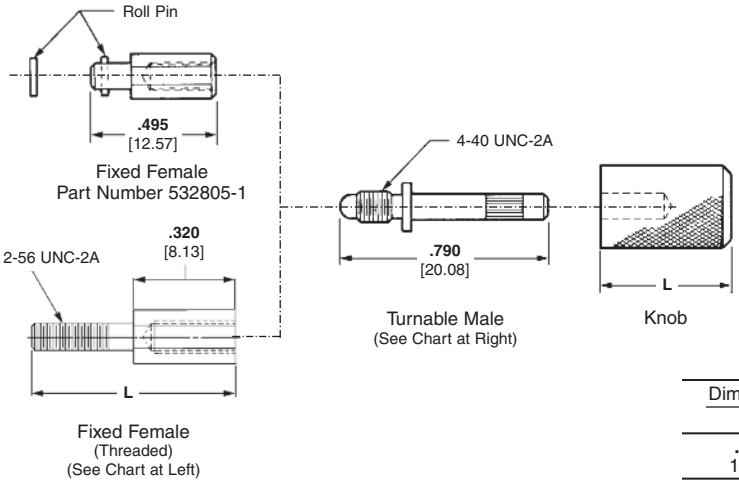

Dimension L	Turnable Male Part Numbers
.500 12.70	532805-3*

*Knob with screwdriver slot

Dimension L	Material and Finish	Fixed Male (Threaded) Part Numbers
.695 17.65	Plain Stainless Steel	533423-1
	Passivated Stainless Steel	533423-2
.960 24.38	Plain Stainless Steel	533423-3

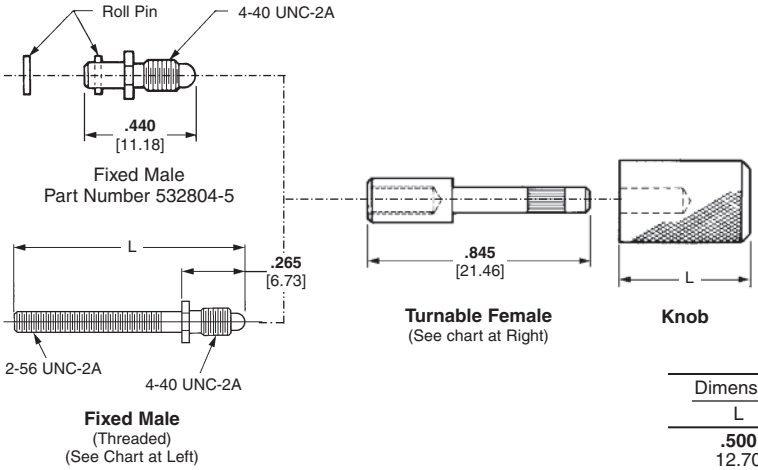

Dimension L	Turnable Male Part Numbers
.500 12.70	532804-3*

*Knob with screwdriver slot

Dimensions are shown for reference purposes only. Specifications subject to change.

Dimensions are in millimeters unless otherwise specified.

USA: +1 800 522 6752
Asia Pacific: +86 0 400 820 6015
UK: +44 800 267 666

For additional support numbers please visit www.te.com

Introduction

Product Facts

- **Qualified to MIL-C-55302/127 and /128**
- **Mates with .025 x .025 [0.64 x 0.64] posts**
- **Dual cantilever spring contact design and built-in anti-overstress**
- **Wide misalignment tolerances**
- **One-piece phosphor bronze contacts, plated gold over nickel per MIL-C-55302**
- **.100 [2.54] centerline spacing**
- **Choice of single or double row assemblies**
- **Assemblies available for .062 [1.57] or .093 [2.36] thick PC boards**
- **Special right-angle receptacle configurations available**

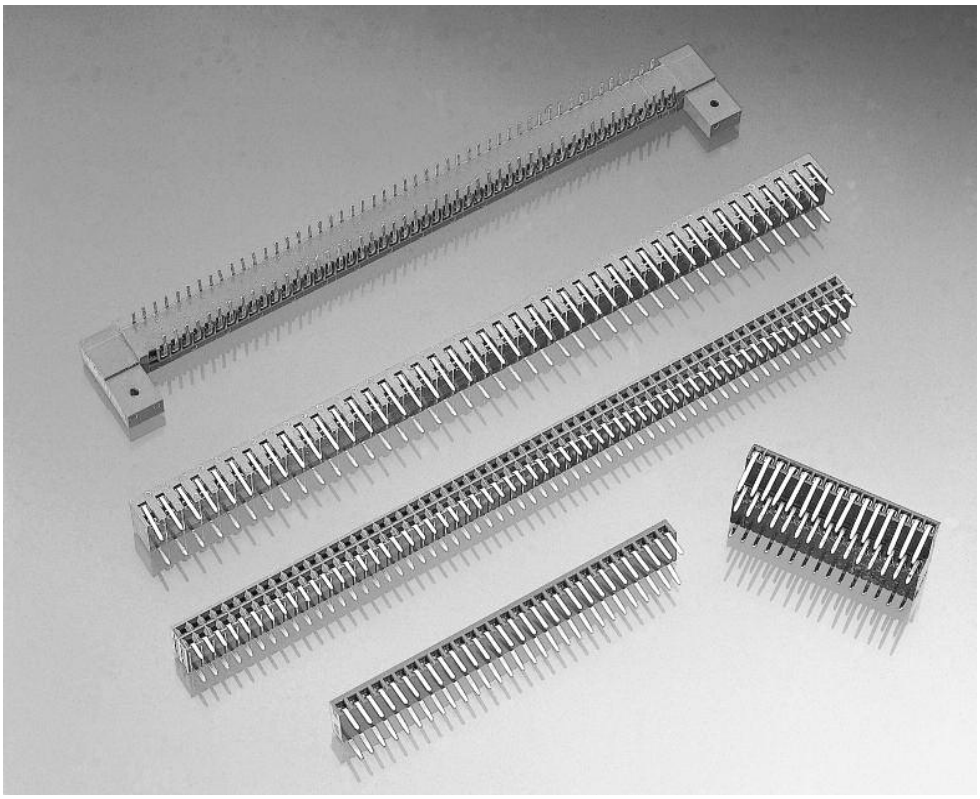

AMPMODU Receptacle Assemblies per MIL-C-55302 are specifically designed to meet today's need for a reliable, modular interconnection system for advanced electronic packaging.

These right-angle assemblies mate with the electronic industry's popular, .025 x .025 [0.64 x 0.64] posts. This means that the AMPMODU Connector system may be used with a host of applications … from individual PC board mount posts to complex post headers and connectors.

Housings are made of blue diallyl phthalate, 94V-0 rated thermoplastic, and are pre-loaded with phosphor bronze contacts, plated .000050 [0.00127] gold over .000050 [0.00127] nickel per MIL-C-55302. A special AMPMODU Receptacle Assembly is available for high temperature requirements. This double row, right-angle assembly has a housing made of polyphenylene sulfide (PPS) GST-40F, per MIL-M-24519 with a choice of contact platings.

Keying plugs are available for all assembly configurations.

Technical Features

Center Spacing — 0.100 [2.54]

Housing Materials — Polyphenylene sulfide or diallyl phthalate

Flammability Rating — 94 V-0

Contact Material — Phosphor bronze

Contact Finish — .000050 [.00127] Gold or gold flash

Temperature Range — -85° to 257°F [-65° to 125°C]

Current Rating — 3 amp max.

Termination Resistance (max) — 12 milliohms max.

Performance Characteristics

Dielectric Withstand Voltage — 750 Vac at sea level

Insulation Resistance — 5000 megohms minimum

Contact Insertion Force — 6 oz. [1.67 N] max. per contact

Durability — 500 cycles

Vibration — MIL-STD-1344 method 2005 Cond III (15G)

Physical Shock — MIL-STD-1344 method 2004 Cond G (100G)

Thermal Shock — MIL-STD-1344 method 1003 Cond A

Temperature Humidity — MIL-STD-1344 method 1002 Type II

Technical Documents
Application spec. 114-25018

Catalog 1308940
Revised 9-14

www.te.com

Dimensions are shown for reference purposes only. Specifications subject to change.

Dimensions are in millimeters unless otherwise specified.

USA: +1 800 522 6752
Asia Pacific: +86 0 400 820 6015
UK: +44 800 267 666

For additional support numbers please visit www.te.com

Receptacle Assemblies, Single Row

Material and Finish

Housing — In accordance with MIL-C-55302 or MIL-M-24519 type GST-40F

Contacts — In accordance with MIL-C-55302

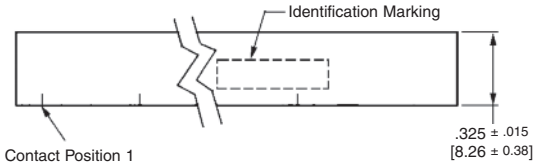

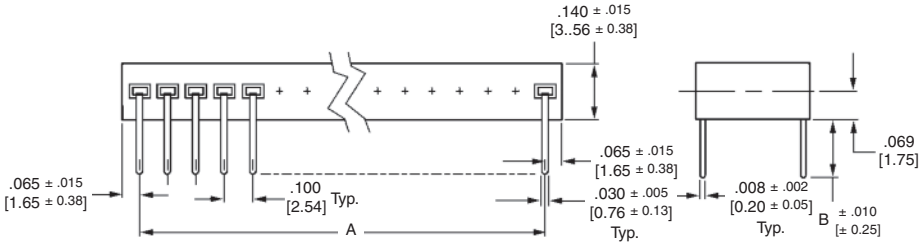

No. of Pos.	Dimensions A	Dimensions B	Board Thickness	Military Part No M55302/127-	AMP Part No.
2	.100 2.54	.175 4.45	.125 3.18	023B	102275-1
3	.200 5.08	.175 4.45	.125 3.18	033B	102275-2
4	.300 7.62	.175 4.45	.125 3.18	043B	102275-3
5	.400 10.16	.175 4.45	.125 3.18	053B	102275-4
6	.500 12.70	.115 2.92	.062 1.57	061B	87968-5
7	**.600** 15.24	.175 4.45	.125 3.18	073B	102275-6
8	.700 17.78	.175 4.45	.125 3.18	083B	102275-7
9	.800 20.32	.175 4.45	.125 3.18	093B	102275-8
10	.900 22.86	.175 4.45	.125 3.18	103B	102275-9
11	1.000 25.40	.175 4.45	.125 3.18	113B	1-102275-0

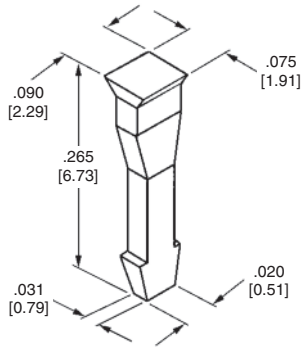

Keying Plug —
Military Part Number
M55302/127-00KY
Part Number 102188-1

Catalog 1308940
Revised 9-14

www.te.com

Dimensions are shown for reference purposes only. Specifications subject to change.

Dimensions are in millimeters unless otherwise specified.

USA: +1 800 522 6752
Asia Pacific: +86 0 400 820 6015
UK: +44 800 267 666

For additional support numbers please visit www.te.com

Receptacle Assemblies, Single Row (Continued)

No. of Pos.	Dimensions A	Dimensions B	Board Thickness	Military Part No M55302/127-	AMP Part No.
12	1.100 27.94	.175 4.45	.125 3.18	123B	1-102275-1
13	1.200 30.48	.175 4.45	.125 3.18	133B	1-102275-2
15	1.400 35.56	.175 4.45	.125 3.18	153B	1-102275-4
16	1.500 38.10	.175 4.45	.125 3.18	163B	1-102275-5
17	1.600 40.64	.175 4.45	.125 3.18	173B	1-102275-6
18	1.700 43.18	.175 4.45	.125 3.18	183B	1-102275-7
19	1.800 45.72	.175 4.45	.125 3.18	193B	1-102275-8
20	1.900 48.26	.175 4.45	.125 3.18	203B	1-102275-9
21	2.000 50.80	.145 3.68	.093 2.36	212B	2-87971-0
		.175 4.45	.125 3.18	213B	2-102275-0
22	2.100 5.34	.175 4.45	.125 3.18	223B	2-102275-1
23	2.200 55.88	.175 4.45	.125 3.18	233B	2-102275-2
24	2.300 58.42	.175 4.45	.125 3.18	243B	2-102275-3
25	2.400 60.96	.175 4.45	.125 3.18	253B	2-102275-4
26	2.500	.175 4.45	.125 3.18	263B	2-102275-5
27	2.600 66.04	.145 3.68	.093 2.36	272B	2-87971-6
		.175 4.45	.125 3.18	273B	2-102275-6
28	2.700 68.58	.175 4.45	.125 3.18	283B	2-102275-7
29	2.800 71.12	.175 4.45	.125 3.18	293B	2-102275-8
30	2.900 73.66	.175 4.45	.125 3.18	303B	2-102275-9
31	3.000 76.20	.175 4.45	.125 3.18	313B	3-102275-0
32	3.100 78.74	.175 4.45	.125 3.18	323B	3-102275-1
33	3.200 81.28	.175 4.45	.125 3.18	333B	3-102275-2
34	3.300 83.82	.175 4.45	.125 3.18	343B	3-102275-3
35	3.400 86.36	.175 4.45	.125 3.18	353B	3-102275-4
36	3.500 88.90	.175 4.45	.125 3.18	363B	3-102275-5
37	3.600 91.44	.175 4.45	.125 4.45	373B	3-102275-6
38	3.700 93.98	.175 4.45	.125 3.18	383B	3-102275-7
39	3.800 96.52	.175 4.45	.125 3.18	393B	3-102275-8

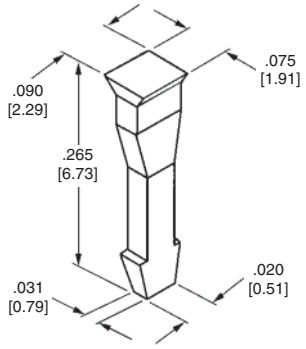

Keying Plug —
Military Part Number
M55302/127-00KY
Part Number 102188-1

Dimensions are shown for reference purposes only. Specifications subject to change.

Dimensions are in millimeters unless otherwise specified.

USA: +1 800 522 6752
Asia Pacific: +86 0 400 820 6015
UK: +44 800 267 666

For additional support numbers please visit www.te.com

Receptacle Assemblies, Single Row (Continued)

No. of Pos.	Dimensions A	Dimensions B	Board Thickness	Military Part No M55302/127-	AMP Part No.
40	3.900 99.06	145 3.68	.093 2.36	402B	3-87971-9
		.175 4.45	.125 3.18	403B	3-102275-9
41	4.000 101.60	.175 4.45	.125 3.18	413B	4-102275-0
42	4.100 104.14	.175 4.45	.125 3.18	423B	4-102275-1
43	4.200 106.68	.175 4.45	.125 3.18	433B	4-102275-2
44	4.300 109.22	.175 4.45	.125 3.18	443B	4-102275-3
45	4.400 111.76	.175 4.45	.125 3.18	453B	4-102275-4
46	4.500 114.30	.175 4.45	.125 3.18	463B	4-102275-5
47	4.600 116.84	.175 4.45	.125 3.18	473B	4-102275-6
48	4.100 119.38	.175 4.45	.125 3.18	483B	4-102275-7
49	4.800 121.92	.175 4.45	.125 3.18	493B	4-102275-8
50	4.900 124.46	.175 4.45	.125 3.18	503B	4-102275-9
51	5.000 127.00	.175 4.45	.125 3.18	513B	5-102275-0
53	5.200 132.08	.175 4.45	.125 3.18	533B	5-102275-2
54	5.300 134.62	.175 4.45	.125 3.18	543B	5-102275-3
55	5.400 137.16	.175 4.45	.125 3.18	553B	5-102275-4
56	5.500 139.70	.175 4.45	.125 3.18	563B	5-102275-5
57	5.600 142.24	.175 4.45	.125 3.18	573B	5-102275-6
58	5.700 144.78	.175 4.45	.125 3.18	583B	5-102275-7
59	5.800 147.32	.175 4.45	.125 3.18	593B	5-102275-8
60	5.900 149.86	.175 4.45	.125 3.18	603B	5-102275-9
61	6.000 152.40	.175 4.45	.125 3.18	613B	6-102275-0
62	6.100 154.94	.175 4.45	.125 3.18	623B	6-102275-1
63	6.200 157.48	.175 4.45	.125 3.18	633B	6-102275-2
64	6.300 160.02	.175 4.45	.125 3.18	643B	6-102275-3
65	6.400 162.56	.175 4.45	.125 3.18	653B	6-102275-4

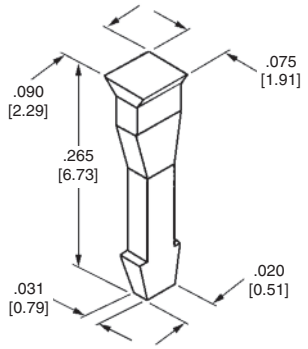

Keying Plug —
Military Part Number
M55302/127-00KY
Part Number 102188-1

Dimensions are shown for reference purposes only. Specifications subject to change.

Dimensions are in millimeters unless otherwise specified.

USA: +1 800 522 6752
Asia Pacific: +86 0 400 820 6015
UK: +44 800 267 666

For additional support numbers please visit www.te.com

Receptacle Assemblies, Double Row

Material and Finish

Housing — In accordance with MIL-C-55302 or MIL-M-24519 type GST-40F

Contacts — In accordance with MIL-C-55302

Plating Codes:

A — Gold flash over .000050 [0.00127] min. nickel on entire contact, .000050 [0.00127] min. gold on contact area

B — .000050 [0.00127] min. gold over .000050 [0.00127] min. nickel on the entire contact

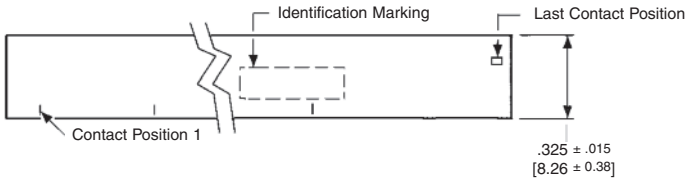

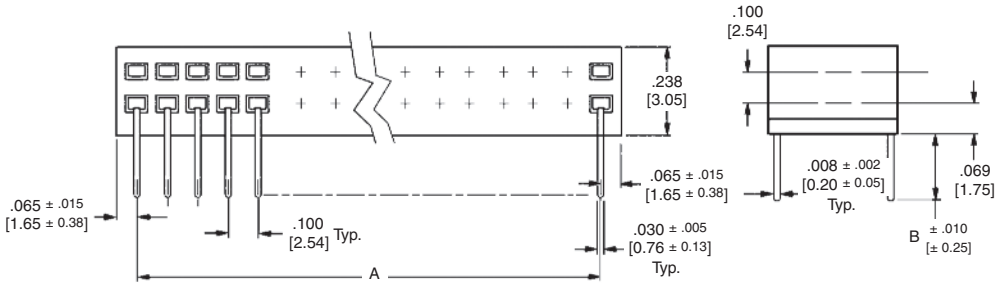

Housing Configuration 1

Typical End View

No. of Pos.	Dimensions A	Dimensions B	Board Thickness	Plating Code A: Military Part No M55302/128-	Plating Code A: Part No.	Plating Code B: Military Part No. M55302/128-	Plating Code B: Part No.
4	**.100** 2.54	**.115** 2.92	**.062** 1.57	AA1A	87961-1	—	—
8	**.300** 7.62	**.145** 3.68	**.093** 2.36	AC1C	87964-3	—	—
10	**.400** 10.16	**.115** 2.92	**.062** 1.57	AD1A	87961-4	AD1B	87962-4
12	**.500** 12.70	**.115** 2.92	**.062** 1.57	AE1A	87961-5	—	—
		.145 3.68	**.093** 2.36	AE1C	87964-5	—	—
14	**.600** 15.24	**.115** 2.92	**.062** 1.57	AF1A	87961-6	AF1B	87962-6
16	**.700** 17.78	**.115** 2.92	**.062** 1.57	AG1A	87961-7	AG1B	87962-7
18	**.800** 20.32	**.115** 2.92	**.062** 1.57	—	—	AH1B	87962-8
		.145 3.68	**.093** 2.36	AH1C	87964-8	—	—
20	**.900** 22.86	**.115** 2.92	**.062** 1.57	AJ1A	87961-9	AJ1B	87962-9
		.145 3.68	**.093** 2.36	—	—	AJ1D	87965-9
22	**1.000** 25.40	**.115** 2.92	**.062** 1.57	AK1A	1-87961-0	AK1B	1-87962-0
		.175 4.45	**.125** 3.18	AK1E	1-102277-0	—	—
24	**1.100** 27.94	**.115** 2.92	**.062** 1.57	AL1A	1-87961-1	AL1B	1-87962-1
26	**1.200** 30.48	**.115** 2.92	**.062** 1.57	AM1A	1-87961-2	AM1B	1-87962-2
		.145 3.68	**.093** 2.36	AM1C	1-87964-2	—	—

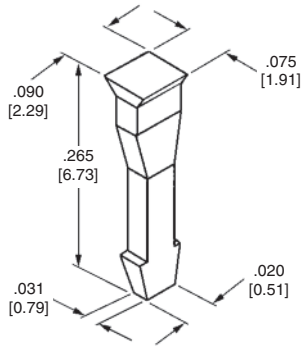

Keying Plug —
Military Part Number
M55302/127-00KY
Part Number 102188-1

Dimensions are shown for reference purposes only. Specifications subject to change.

Dimensions are in millimeters unless otherwise specified.

USA: +1 800 522 6752
Asia Pacific: +86 0 400 820 6015
UK: +44 800 267 666

For additional support numbers please visit www.te.com

Receptacle Assemblies, Double Row (Continued)

No. of Pos.	Dimensions A	Dimensions B	Board Thickness	Plating Code A Military Part No M55302/128-	Plating Code A Part No.	Plating Code B Military Part No. M55302/128-	Plating Code B Part No.
28	**1.300** 33.02	**.115** 2.92	**.062** 1.57	AN1A	1-87961-3	AN1B	1-87962-3
30	**1.400** 35.56	**.115** 2.92	**.062** 1.57	AP1A	1-87961-4	AP1B	1-87962-4
		.145 3.68	**.093** 2.36	AP1C	1-87964-4	—	—
32	**1.500** 38.10	**.115** 2.92	**.062** 1.57	AQ1A	1-87961-5	AQ1B	1-87962-5
34	**1.600** 40.64	**.115** 2.92	**.062** 1.57	—	—	AR1B	1-87962-6
		.145 3.68	**.093** 2.36	AR1C	1-87964-6	—	—
		.175 4.45	**.125** 3.18	AR1E	1-102277-6	—	—
36	**1.700** 43.18	**.115** 2.92	**.062** 1.57	BA1A	1-87961-7	BA1B	1-87962-7
		.145 3.68	**.093** 2.36	BA1C	1-87964-7	BA1D	1-87965-7
		.175 4.45	**.125** 3.18	BA1E	1-102277-7	—	—
38	**1.800** 45.72	**.115** 2.92	**.062** 1.57	BB1A	1-87961-8	BB1B	1-87962-8
		.175 4.45	**.125** 3.18	—	—	—	—
40	**1.900** 48.26	**.115** 2.92	**.062** 1.57	BC1A	1-87961-9	BC1B	1-87962-9
		.145 3.68	**.093** 2.36	BC1C	1-87964-9	—	—
42	**2.000** 50.80	**.115** 2.92	**.062** 1.57	BD1A	2-87961-0	BD1B	2-87962-0
		.145 3.68	**.093** 2.36	BD1C	2-87964-0	—	—
44	**2.100** 53.34	**.115** 2.92	**.062** 1.57	—	—	BE1B	2-87962-1
		.175 4.45	**.125** 3.18	—	—	BE1F	2-102278-1
46	**2.200** 55.88	**.115** 2.92	**.062** 1.57	BF1A	2-87961-2	BF1B	2-87962-2
		.145 3.68	**.093** 2.36	BF1C	2-87964-2	—	—
48	**2.300** 58.42	**.115** 2.92	**.062** 1.57	BG1A	2-87961-3	—	—
		.145 3.68	**.093** 2.36	BG1C	2-87964-3	—	—
50	**2.400** 60.96	**.115** 2.92	**.062** 1.57	BH1A	2-87961-4	BH1B	2-87962-4
		.145 3.68	**.093** 2.36	BH1C	2-87964-4	—	—
		.175 4.45	**.125** 3.18	BH1E	2-102277-4	—	—
52	**2.500** 63.50	**.115** 2.92	**.062** 1.57	BJ1A	2-87961-5	BJ1B	2-87962-5
		.145 3.68	**.093** 2.36	BJ1C	2-87964-5	—	—
54	**2.600** 66.04	**.115** 2.92	**.062** 1.57	—	—	BK1B	2-87962-6
56	**2.700** 68.58	**.115** 2.92	**.062** 1.57	BL1A	2-87961-7	BL1B	2-87962-7
58	**2.800** 71.12	**.115** 2.92	**.062** 1.57	BM1A	2-87961-8	BM1B	2-87962-8
60	**2.900** 73.66	**.115** 2.92	**.062** 1.57	BN1A	2-87961-9	BN1B	2-87962-9
		.175 4.45	**.125** 3.18	BN1E	2-102277-9	BN1F	2-102278-9

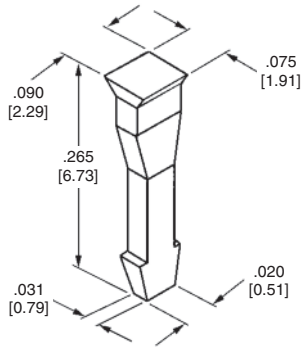

Keying Plug —
Military Part Number
M55302/127-00KY
Part Number 102188-1

Dimensions are shown for reference purposes only. Specifications subject to change.

Dimensions are in millimeters unless otherwise specified.

USA: +1 800 522 6752
Asia Pacific: +86 0 400 820 6015
UK: +44 800 267 666

For additional support numbers please visit www.te.com

Receptacle Assemblies, Double Row (Continued)

No. of Pos.	Dimensions A	Dimensions B	Board Thickness	Plating Code A Military Part No M55302/128-	Plating Code A Part No.	Plating Code B Military Part No. M55302/128-	Plating Code B Part No.
62	**3.000** 76.20	**.115** 2.92	**.062** 1.57	—	—	BP1B	3-87962-0
		.145 3.68	**.093** 2.36	—	—	BP1D	3-87965-0
64	**3.100** 78.74	**.115** 2.92	**.062** 1.57	—	—	BQ1B	3-87962-1
66	**3.200** 81.28	**.115** 2.92	**.062** 1.57	BR1A	3-87961-2	BR1B	3-87962-2
		.175 4.45	**.125** 3.18	BR1E	3-102277-2	—	—
68	**3.300** 83.82	**.115** 2.92	**.062** 1.57	CA1A	3-87961-3	CA1B	3-87962-3
		.145 3.68	**.093** 2.36	CA1C	3-87964-3	—	—
70	**3.400** 86.36	**.115** 2.92	**.062** 1.57	CB1A	3-87961-4	CB1B	3-87962-4
		.145 3.68	**.093** 2.36	CB1C	3-87964-4	—	—
72	**3.500** 88.90	**.115** 2.92	**.062** 1.57	CC1A	3-87961-5	—	—
74	**3.600** 91.44	**.115** 2.92	**.062** 1.57	CD1A	3-87961-6	CD1B	3-87962-6
76	**3.700** 93.98	**.115** 2.92	**.062** 1.57	CE1A	3-87961-7	—	—
78	**3.800** 96.52	**.115** 2.92	**.062** 1.57	—	—	CF1B	3-87962-8
		.145 3.68	**.093** 2.36	CF1C	3-87964-8	—	—
80	**3.900** 99.06	**.115** 2.92	**.062** 1.57	CG1A	3-87961-9	CG1B	3-87962-9
		.145 3.68	**.093** 2.36	CG1C	3-87964-9	—	—
86	**4.200** 106.68	**.115** 2.92	**.062** 1.57	—	—	CK1B	4-87962-2
88	**4.300** 109.22	**.115** 2.92	**.062** 1.57	CL1A	4-87961-3	—	—
		.145 3.68	**.093** 2.36	—	—	CL1D	4-87965-3
90	**4.400** 111.76	**.115** 2.92	**.062** 1.57	CM1A	4-87961-4	—	—
		.175 4.45	**.125** 3.18	—	—	CM1F	4-102278-4
96	**4.700** 119.38	**.115** 2.92	**.062** 1.57	—	—	CQ1B	4-87962-7
98	**4.800** 121.92	**.115** 2.92	**.062** 1.57	CR1A	4-87961-8	—	—
		.145 3.68	**.093** 2.36	CR1C	4-87964-8	—	—
100	**4.900** 124.46	**.115** 2.92	**.062** 1.57	DA1A	4-87961-9	DA1B	4-87962-9
106	**5.200** 132.08	**.115** 2.92	**.062** 1.57	DD1A	5-87961-2	—	—
108	**5.300** 134.62	**.115** 2.92	**.062** 1.57	DE1A	5-87961-3	—	—
110	**5.400** 137.16	**.115** 2.92	**.062** 1.57	DF1A	5-87961-4	—	—
116	**5.700** 144.78	**.115** 2.92	**.062** 1.57	DJ1A	5-87961-7	DJ1B	5-87962-7
		.145 3.68	**.093** 2.36	DJ1C	5-87964-7	DJ1D	5-87965-7
120	**5.900** 149.86	**.115** 2.92	**.062** 1.57	—	—	DL1B	5-87962-9
122	**6.000** 152.40	**.115** 2.92	**.062** 1.57	DM1A	6-87961-0	DM1B	6-87962-0
124	**6.100** 154.94	**.115** 2.92	**.062** 1.57	DN1A	6-87961-1	—	—
130	**6.400** 162.66	**.115** 2.92	**.062** 1.57	DR1A	6-87961-4	DR1B	6-87962-4

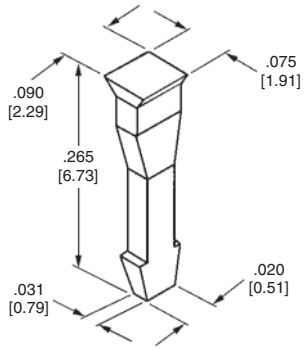

Keying Plug —
Military Part Number
M55302/127-00KY
Part Number 102188-1

Dimensions are shown for reference purposes only. Specifications subject to change.

Dimensions are in millimeters unless otherwise specified.

USA: +1 800 522 6752
Asia Pacific: +86 0 400 820 6015
UK: +44 800 267 666

For additional support numbers please visit www.te.com

Special Double Row Receptacle Assemblies

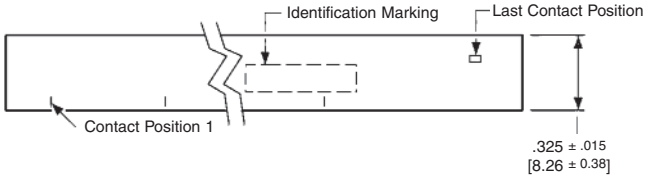

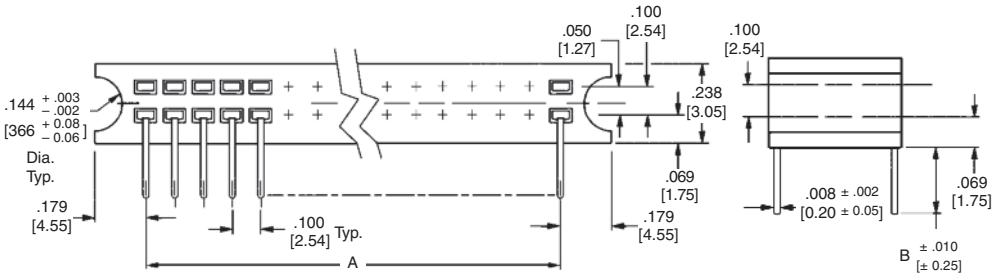

Material and Finish

Housing — In accordance with MIL-C-55302 or MIL-M-24519 type GST-40F

Contacts — Per MIL-C-55302

Plating Codes:
A — Gold flash over .000050 [0.00127] min. nickel on entire contact, .000050 [0.00127] min. gold on contact area
B — .000050 [0.00127] min. gold over .000050 [0.00127] min. nickel on the entire contact

No. of Pos.	Dimensions A	Dimensions B	Board Thickness	Plating Code A Military Part No M55302/128-	Plating Code A Part No.	Plating Code B Military Part No. M55302/128-	Plating Code B Part No.
22	**1.000** 25.40	**.115** 2.92	**.062** 1.57	AK2A	102192-5	—	—
26	**1.200** 30.48	**.175** 4.45	**.125** 3.18	AM2E	102281-6	—	—
50	**2.400** 60.96	**.115** 2.92	**.062** 1.57	BH2A	102192-8	—	—
		.145 3.68	**.093** 2.36	—	—	BH2D	102196-8
54	**2.600** 66.04	**.115** 2.92	**.062** 1.57	—	—	BK2B	102193-3
58	**2.800** 71.12	**.115** 2.92	**.062** 1.57	BM2A	102192-2	BM2B	102193-2
60	**2.900** 73.66	**.115** 2.92	**.062** 1.57	BN2A	102192-4	—	—
80	**3.900** 99.06	**.115** 2.92	**.062** 1.57	CG2A	102192-9	—	—
84	**4.100** 104.14	**.115** 2.92	**.062** 1.57	—	—	CJ2B	102193-1
100	**4.900** 124.46	**.115** 2.92	**.062** 1.57	DA2A	1-102192-0	DA2B	1-102193-0
102	**5.000** 127.00	**.115** 2.92	**.062** 1.57	—	—	DB2B	102193-7

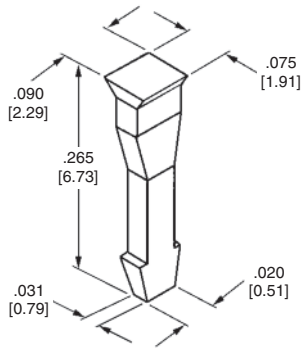

Keying Plug —
Military Part Number
M55302/127-00KY
Part Number 102188-1

Dimensions are shown for reference purposes only. Specifications subject to change.

Dimensions are in millimeters unless otherwise specified.

USA: +1 800 522 6752
Asia Pacific: +86 0 400 820 6015
UK: +44 800 267 666

For additional support numbers please visit www.te.com

Introduction

Product Facts

AMP-BLADE II Connectors

- **Selective gold plating for economy with high performance**
- **Glass-filled polyester housing**

AMP-BLADE and Military Connectors

- **Full gold plating**
- **Diallyl phthalate housing rated from -85°F to 257°F [-65°C to 125°C]**
- **5 amps per contact**
- **Recognized under the Component Program of Underwriters Laboratories Inc. File No. E28476**

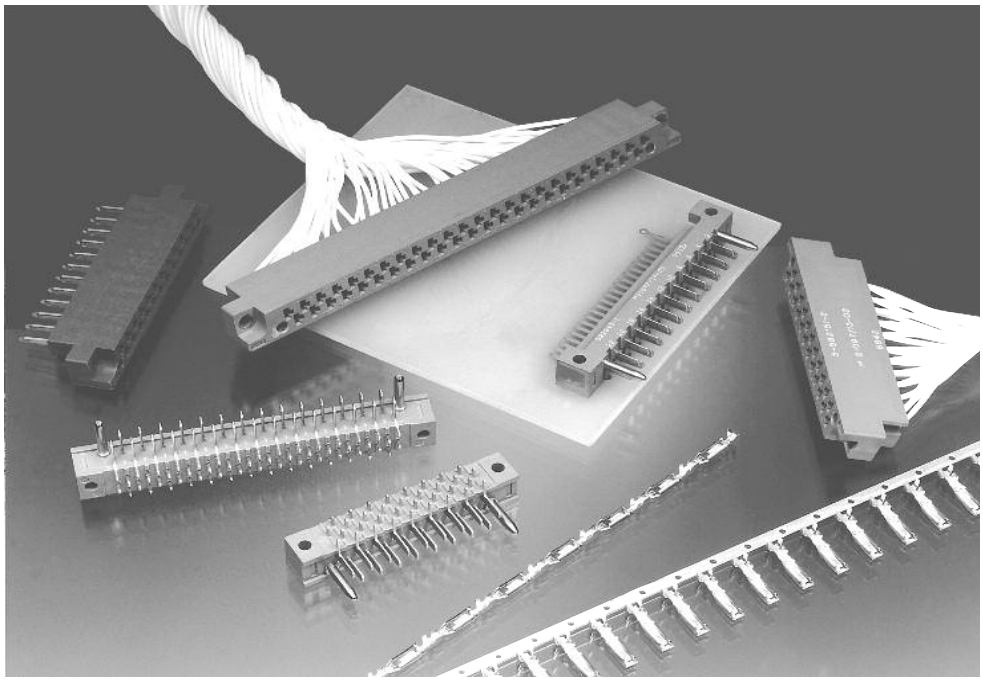

For applications requiring the highest level of conductivity and reliability, AMP-BLADE Two-Piece Printed Circuit Edge Connectors meet all applicable performance requirements of MIL-C-21097.

The blade and receptacle design provides multiple areas of contact for maximum conductivity. Gold-over-nickel plating in mating areas of the contacts prevents metal migration and oxide build-up for additional reliability. Controlled insertion and extraction forces permit easy mating and unmating of connector assemblies.

A guide system helps prevent contact damage and provides positive alignment for reliable mating of connector halves.

The receptacle half of this two-piece connector accepts a variety of contact designs, but requires only that number of contacts which fulfills circuitry needs.

Crimp snap-in contacts are available in loose-piece or, to further reduce installed costs, in strip form for application by high-speed, automatic compression-crimping equipment.

Post-type contacts are specifically designed for wiring TE Connectivity TERMI-POINT clips and tools. The connectors with post-type contacts also adapt to wrap-type terminations.

The split eyelet contact simplifies bus wiring by permitting wire to be easily snapped into the contact notch for soldering. Each contact accepts up to two 18 AWG [0.8 to 0.9 mm^2] stranded or 16 AWG [1.25 to 1.4 mm^2] solid wires.

High reliability, versatility and speed of assembly are features which recommend the AMP-BLADE Two-Piece Printed Circuit Edge Connectors for dense wiring in applications where rugged serviceability is a prime consideration.

Construction

Contact Material — Phosphor bronze per QQ-B-750
Contact Plating —
Gold plate — MIL-G-45204;
Nickel plate — QQ-N-290 (thickness as specified); Tin-lead per MIL-T-10727, Type 1, on solder tails
Contact Identification — Cavities identified on both faces of receptacle block

Performance

This connector meets performance requirements of MIL-C-21097

Altitude	Test Voltage (AC RMS)
Sea level	1,800 VAC
50,000 feet [15,240 m]	700 VAC
70,000 feet [21,336 m]	500 VAC

Individual-Contact Engaging and Separating Forces —
2 ounces to 16 ounces [0.6 N to 4.5 N]
Contact Resistance —
25 millivolts maximum at 5 amps
Vibration Tolerance —
10 to 2,000 hz. @ 15Gs per method 204B of MIL STD 202
Durability —

Gold Thickness	Cycles
.000015 0.00038	100
.000030 0.00076	250
.000050 0.00127	500

Various technical documents are available for your use:

Product Specifications describe technical performance characteristics and verification tests. They are intended for the Design, Component and Quality Engineer.

108-9004 Diallyl Phthalate

108-9009 Phenolic

108-9201 Contact Crimp

Instruction Sheets provide instructions for assembling or applying the product. They are intended for the Manufacturing Assembler or Operator.

Instructional material covering operation, setup, maintenance, repair, etc. is included with each machine, tool or die set. If this material is required prior to receiving your tooling, contact Technical Support for the applicable document.

Electrical Characteristics

Contact Rating — 5 amps

Operating Temperature — -85° to 257°F [-65° to 125°C] (Military)

Catalog 1308940
Revised 9-14

www.te.com

Dimensions are shown for reference purposes only. Specifications subject to change.

Dimensions are in millimeters unless otherwise specified.

USA: +1 800 522 6752
Asia Pacific: +86 0 400 820 6015
UK: +44 800 267 666

For additional support numbers please visit www.te.com

AMP-BLADE Connector for Snap-In Receptacle Contacts

Crimp, Snap-In Receptacle Contacts

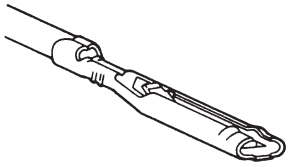

Wire (Insulation) Ranges	Gold Plate Thickness	Side Feed Contact Part Number	
		Strip Form	Loose Piece*
24-20 AWG 0.2-0.5 mm² (**.040-.080** 1.02-2.03)	**.000030** 0.00076	531586-3[1] 5-531586-3[2]	531586-6[1] 5-531586-6[2]
	.000050 0.00127	531586-4	—
28-24 AWG 0.09-0.2 mm² (**.030-.060** 0.76-1.52)	**.000030** 0.00076	531587-3	531587-6
1: 18 AWG 0.8-0.9 mm² **or** **2: 20 or 22 AWG** 0.3-0.6 mm² (**.067-.090** 1.70-2.28)	**.000015** 0.00038	—	—
	.000030 0.00076	531589-3[1] 5-531589-3[2]	531589-6

*See page 1-109 for crimping tool.

Materials

Contact — Phosphor bronze

[1] **Finish** — Selective gold plating in contact mating area over .000030 [0.00076] nickel, see table for gold thicknesses; tin-lead in wire barrel

[2] **Finish** — RoHS Part Numbers are same as above except for tin in wire barrel

Wire Range AWG	Wire Range mm²	Insulation Range	Commercial Type: End Feed Strip Part No.	Commercial Type: Loose Piece Part No.	Military Type: Military Part No.	Military Type: End Feed Strip Part No.	Military Type: Loose Piece Part No.
			.000030 [0.00076] Gold Over .000030 [0.00076] Nickel		.000050 [0.00127] Gold Over .000030 [0.00076] Nickel		
24-20	0.2-0.6	**.040-.080** 1.02-2.03	66005-2	66010-2	21097/16-03	66005-3	66010-3
28-24	0.08-0.2	**.030-.060** 0.76-1.52	—	66011-2	21097/16-01	66009-3	66011-3
(2)20 or (2)22	0.183 or 0.643	**(2).045** to (2)1.14 **(2).072** to (2)1.83	66021-2	66026-2	21097/16-04	66021-3	66026-3
18	0.8	**.067-.090** 1.70-2.29	66021-2	66026-2	21097/16-04	66021-3	66026-3
28-24	0.08-0.2	**.078** 1.98	66027-2	—	21097/16-02	66027-3	—

Solder—Tab Receptacle Contacts

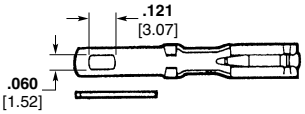

A

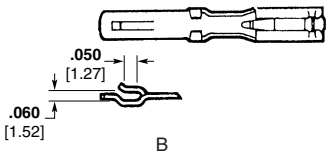

B

Materials

Contact — Phosphor bronze

Type	Maximum Extension Beyond Back Face of Block	Part Numbers—Loose Piece: Commercial Type: Gold Plate Thickness .000030 [0.00076] over .000030 [0.00076] Nickel
A	**.390** 9.91	66086-2
B	**.375** 9.52	66086-4

Post-Type Receptacle Contacts

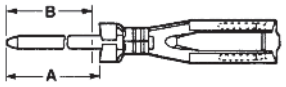

Dimensions A	Dimensions B*	Gold Plate Thickness	Part Numbers - Loose Piece .045 x .045 [1.14 x 1.14] Posts
.410 10.41	**.370** 9.40	**.000030** 0.00076	1-582364-1[1] 6-582364-1[2]
.640 16.26	**.600** 15.24	**.000030** 0.00076	1-582364-2[1]
.810 20.57	**.770** 19.56	**.000030** 0.00076	1-582364-3[1]
1.040 26.42	**1.000** 25.4	**.000030** 0.00076	1-582364-4[1]

*Post length after inserted into housing.

Materials

Contact — Phosphor bronze

[1] **Finish** — Selective gold plating in contact mating area over .000030 [0.00076] nickel (see table for gold thicknesses); posts, tin plated

[2] **Finish** — RoHS Part Numbers have same finish as above except for tin on posts

Catalog 1308940
Revised 9-14

www.te.com

Dimensions are shown for reference purposes only. Specifications subject to change.

Dimensions are in millimeters unless otherwise specified.

USA: +1 800 522 6752
Asia Pacific: +86 0 400 820 6015
UK: +44 800 267 666

For additional support numbers please visit www.te.com

Board Half Housing Pre-loaded with Blade Type Contacts

Housing without Mounting Holes

Materials

Housing — Diallyl phthalate
Blade Contact — Gilding material
Finish — Selective gold plating in contact mating area over .000030 [0.00076] min. nickel. See table for gold thicknesses

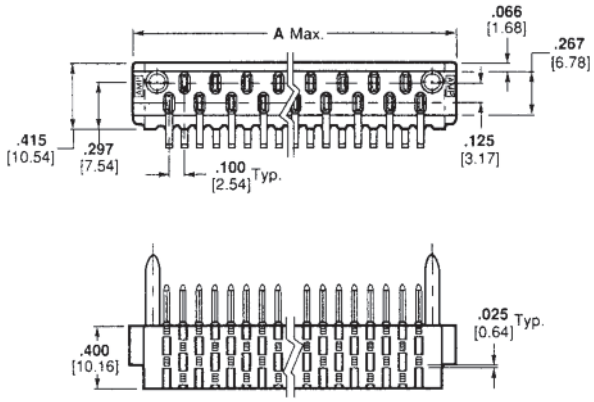

No. of Positions	A (Max.)	Printed Circuit Board Thickness	Military Type CS Diallyl Phthalate Housing: Military Part No. Gold Plating Thickness **.000050 [0.00127]**	Military Type CS Diallyl Phthalate Housing: Part No.
17	**2.070** 52.58	**.125** 3.18	21097/15-03	—
23	**2.670** 67.80	**.063** 1.59	21097/15-04	582843-9
		.094 2.38	21097/15-05	2-582843-0
		.125 3.18	21097/15-06	3-582843-2
35	**3.870** 98.30	**.063** 1.59	21097/15-10	1-582843-1
		.094 2.38	21097/15-11	2-582843-2
41	**4.470** 113.54	**.063** 1.59	21097/15-13	1-582843-2
		.094 2.38	21097/15-14	2-582843-3
47	**5.070** 128.80	**.063** 1.59	21097/15-16	1-582843-3
		.125 3.18	21097/15-18	3-582843-6

Notes:
1. AMP-BLADE contacts (gold plated) are molded into housing in predetermined positions to mate with receptacle housing.
2. Connectors can be furnished with the two middle rows of lines removed to fit existing board hole patterns.

Dimensions are shown for reference purposes only. Specifications subject to change.

Dimensions are in millimeters unless otherwise specified.

USA: +1 800 522 6752
Asia Pacific: +86 0 400 820 6015
UK: +44 800 267 666

For additional support numbers please visit www.te.com

Board Half Housing Pre-loaded with Blade Type Contacts (Continued)

Housing with Mounting Holes

Materials

Housing — Diallyl phthalate

Blade Contact — Gilding metal

3 Finish — Selective gold plating in contact mating area over .000030 [0.00076] min. nickel. See table for gold thicknesses. Gold flash on tails (2 rows) and tin-lead on remaining tails.

4 Finish — RoHS Part Numbers are same as above except for tin on remaining tails

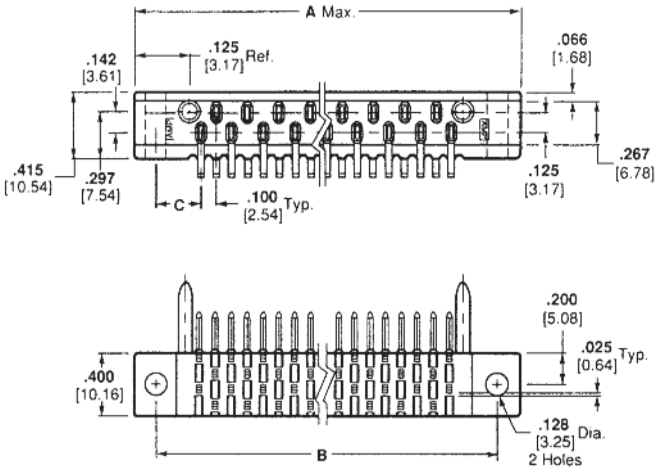

No. of Positions	A (Max.)	B	C	Printed Circuit Board Thickness	Commercial Type — Diallyl Phthalate Housing — Gold Plate Thickness .000015 [0.00030]	Commercial Type — Diallyl Phthalate Housing — Gold Plate Thickness .000030 [0.00076]	Military Type CS — Diallyl Phthalate Housing — Military Part No. Gold Plating Thickness .000050 [0.00127]	Military Type CS — Diallyl Phthalate Housing — Part No.
17	**2.390** 60.70	**2.130** 54.10	**.265** 6.73	**.063** 1.59	1-582390-1[3]	3-582152-1[3] 3-5582152-1[4]	21097/14-01	582843-2
				.094 2.38	—	—	21097/14-02	1-582843-4
				.125 3.18	—	—	21097/14-03	2-582843-5
23	**2.990** 54.10	**2.730** 69.34	**.265** 6.73	**.063** 1.59	—	3-582152-2[3] 3-5582152-2[4]	21097/14-04	582843-3
				.094 2.38	—	—	21097/14-05	582843-1
				.125 3.18	—	—	21097/14-06	2-582843-6
29	**3.590** 91.19	**3.330** 84.58	**.265** 6.73	**.063** 1.59	1-582390-3[3] 1-5582390-3[4]	3-582152-3[3] 3-5582152-3[4]	21097/14-07	582843-4
				.094 2.38	2-582390-3[3] 2-5582390-3[4]	—	21097/14-08	1-582843-5
35	**4.190** 106.43	**3.930** 99.82	**.265** 6.73	**.063** 1.59	1-582390-4[3] 1-5582390-4[4]	3-582152-4[3] 3-5582152-4[4]	21097/14-10	582843-5
				.094 2.38	2-582390-4[3] 2-5582390-4[4]	6-582152-4[3] 6-5582152-4[4]	21097/14-11	1-582843-6
				.125 3.18	—	—	21097/14-12	2-582843-8
41	**4.790** 121.67	**4.530** 115.06	**.265** 6.73	**.063** 1.59	1-582390-5[3]	3-582152-5[3] 3-5582152-5[4]	21097/14-13	582843-6
				.094 2.38	—	6-582152-5[3] 6-5582152-5[4]	21097/14-14	1-582843-7
				.125 3.18	3-582390-5[3] 3-5582390-5[4]	9-582152-5[3]	—	—
47	**5.623** 142.82	**5.363** 136.22	**.381** 9.68	**.063** 1.59	—	3-582308-1[3] 3-5582308-1[4]	21097/14-16	582843-7
				.094 2.38	2-582390-6[3] 2-5582390-6[4]	6-582308-1[3]	21097/14-17	1-582843-8
				.125 4.65	3-582390-6[3]	—	21097/14-18	3-582843-0

Notes:
1. AMP-BLADE contacts (gold plated) are molded into housing in predetermined positions to mate with receptacle housing.
2. Connectors can be furnished with the two middle rows of lines removed to fit existing board hole patterns.

Dimensions are shown for reference purposes only. Specifications subject to change.

Dimensions are in millimeters unless otherwise specified.

USA: +1 800 522 6752
Asia Pacific: +86 0 400 820 6015
UK: +44 800 267 666

For additional support numbers please visit www.te.com

Wire-Half Assemblies and Housings

Pre-loaded Assemblies for Crimp Contacts, TERMI-POINT Clip or Wrap-Type Post Contacts, Solder/Weld Contacts

Materials

Housing — Diallyl phthalate glass-filled polyester, green
Contact — Phosphor bronze
Posts — Brass, tin plated

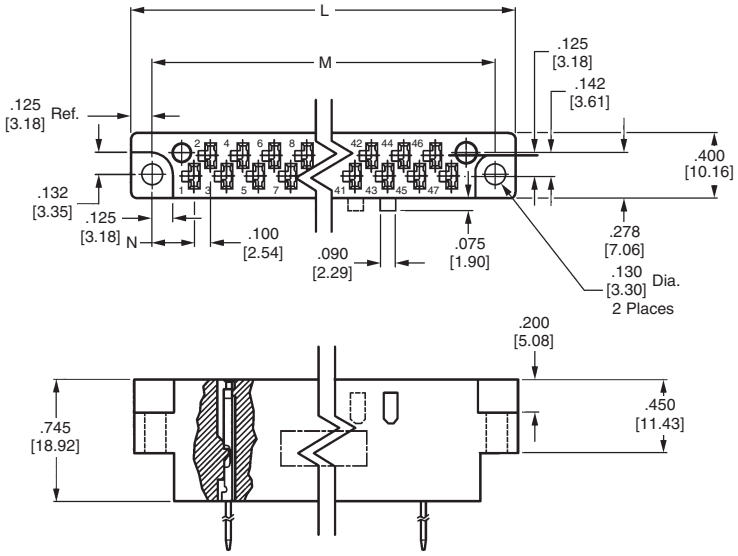

Receptacle Housing

Material

Diallyl phthalate

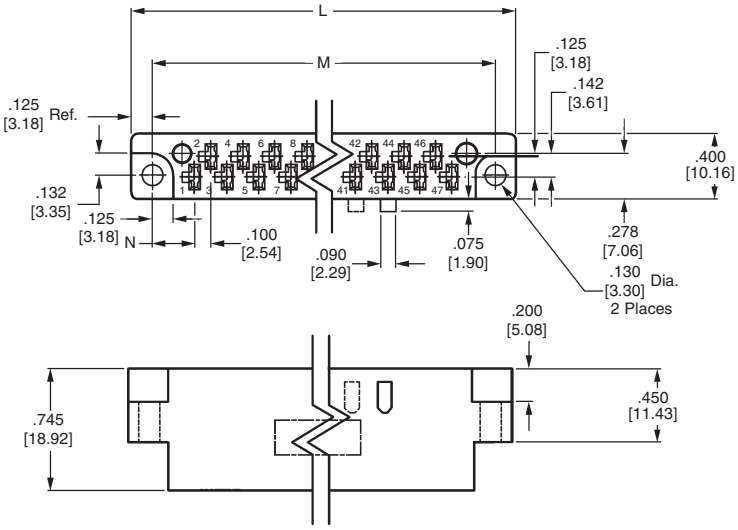

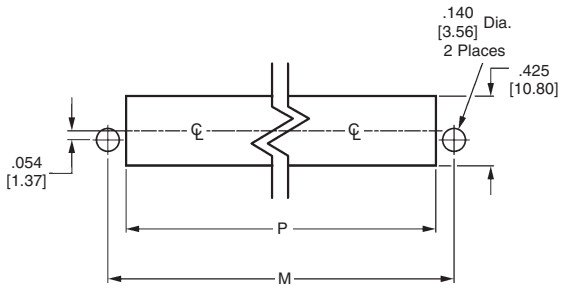

Recommended Panel Cutout

No. of Pos.	Post Length in.	Post Length mm	No. of Clip or Wrap Type Terminations	Dimensions L	Dimensions M	Dimensions N	Cutout Dim. for Mounting P	Diallyl Phthalate — Preloaded Housing Part No. — .031 x .062 [0.79 x 1.57] Post Gold Plate Thickness .000030 [0.00076]	Housings for Crimp or Eyelet Type Contact — Commercial Type Part No.	Military Type CR-Receptacle — Military Part No.	Military Type CR-Receptacle — Part No.
17	**.370**	9.40	1	**2.390** 60.71	**2.130** 54.10	**.265** 6.73	**1.910** 48.51	582828-4	3-582151-1	21097/13-01	5-582151-1
23	**.770**	19.65	3	**2.990** 75.95	**2.730** 69.34	**.265** 6.73	**2.510** 63.75	—	3-582151-2	21097/13-02	5-582151-2
29	**1.000** **.770** **.370**	25.40 19.65 9.40	4 3 1	**3.590** 91.19	**3.330** 84.58	**.265** 6.73	**3.110** 78.99	582830-1 582830-2 —	3-582151-3	21097/13-03	5-582151-3
35	**1.000** **.770** **.600** **.370**	25.40 19.65 15.24 9.40	4 3 2 1	**4.190** 106.43	**3.930** 99.82	**.265** 6.73	**3.710** 94.23	582831-1 — — 582831-4	3-582151-4	21097/13-04	5-582151-4
41	**.770** **.600** **.370**	19.65 15.24 9.40	3 2 1	**4.790** 121.67	**4.530** 115.06	**.265** 6.73	**4.310** 109.47	— — 582832-4	3-582151-5	21097/13-05	5-582151-5
47	**1.000** **.770** **.600** **.370**	25.40 19.65 15.24 9.40	4 3 2 1	**5.623** 142.82	**5.363** 136.22	**.381** 9.68	**5.143** 130.63	582819-1 582819-2 — —	3-582307-1	21097/13-06	5-582307-1

Catalog 1308940
Revised 9-14

www.te.com

Dimensions are shown for reference purposes only. Specifications subject to change.

Dimensions are in millimeters unless otherwise specified.

USA: +1 800 522 6752
Asia Pacific: +86 0 400 820 6015
UK: +44 800 267 666

For additional support numbers please visit www.te.com

Receptacle Housings for Crimp Snap-in Contacts

Material

Glass-filled polyester, green

Related Product Data

Contact Part Numbers — page 1-103

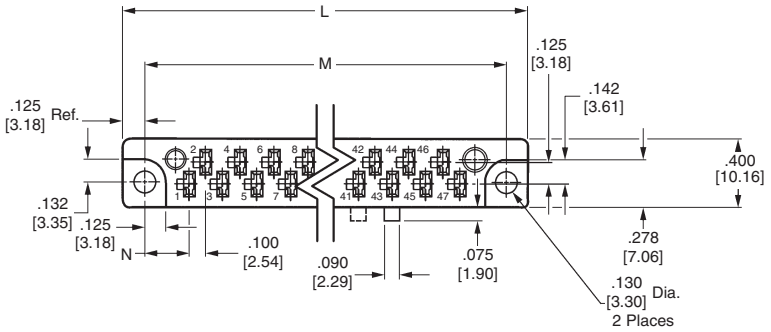

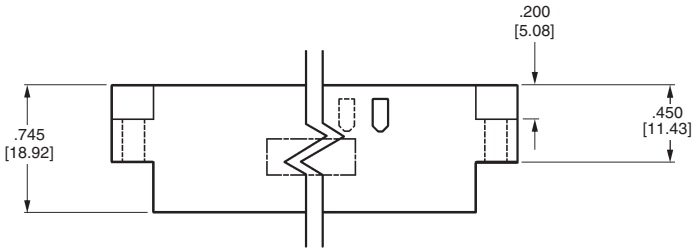

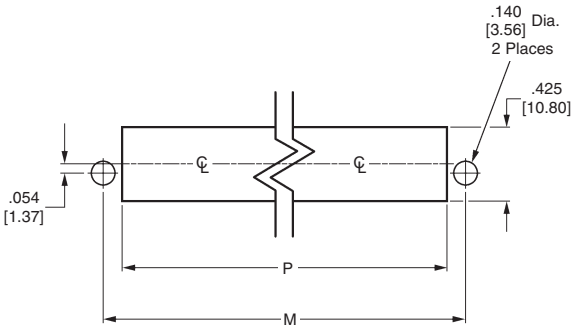

Recommended Panel Cutout

No. of Pos.	Dimensions				AMP Part Number
	L	M	N	P	
17	**2.390** 60.71	**2.130** 54.10	**.265** 6.73	**1.910** 48.51	531590-1
23	**2.990** 75.95	**2.730** 69.34	**.265** 6.73	**2.510** 63.75	531590-2
29	**3.590** 91.19	**3.330** 84.58	**.265** 6.73	**3.110** 78.99	531590-3
35	**4.190** 106.43	**3.930** 99.82	**.265** 6.73	**3.710** 94.23	531590-4
41	**4.790** 121.67	**4.530** 115.06	**.265** 6.73	**4.310** 109.47	531590-5
47	**5.623** 142.82	**5.363** 136.22	**.381** 9.68	**5.143** 130.63	531590-6

Dimensions are shown for reference purposes only. Specifications subject to change.

Dimensions are in millimeters unless otherwise specified.

USA: +1 800 522 6752
Asia Pacific: +86 0 400 820 6015
UK: +44 800 267 666

For additional support numbers please visit www.te.com

AMP-BLADE Connector Keying

Keying Plugs

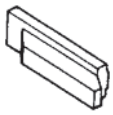

Keying Plug — Nylon
Part Number 1-582156-9
Military Part Number 21097/11-07

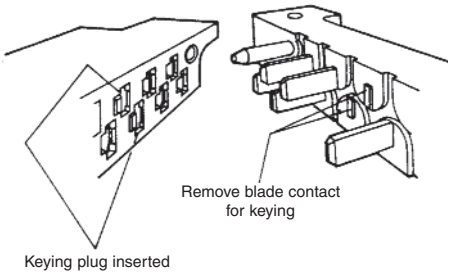

Keying of the connector can be achieved by plugging receptacle cavities. Insert keying plug into mating side of receptacle housing cavity. Remove corresponding blade contact from blade housing using tool number 811145.

Printed Circuit Board Layout

No. of Pos.	Dimensions A	Dimensions B
17	**2.130** 54.10	**.265** 6.73
23	**2.730** 69.34	**.265** 6.73
29	**3.330** 84.58	**.265** 6.73
35	**3.930** 99.82	**.265** 6.73
41	**4.530** 115.06	**.265** 6.73
47	**5.363** 136.22	**.381** 9.68

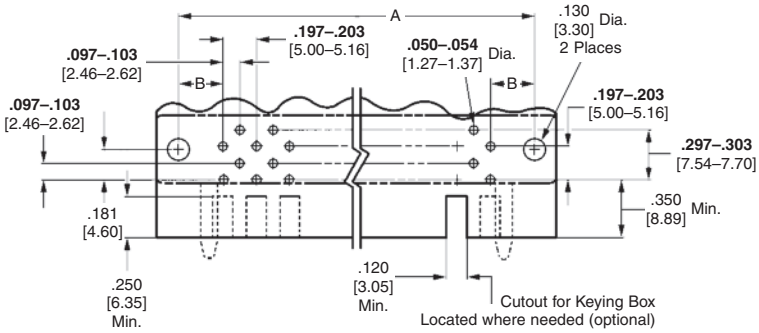

Note: If existing printed circuit board layout does not include the two middle rows of holes, TE Connectivity can supply the connector with the middle rows of tines removed.

Catalog 1308940
Revised 9-14

www.te.com

Dimensions are shown for reference purposes only. Specifications subject to change.

Dimensions are in millimeters unless otherwise specified.

USA: +1 800 522 6752
Asia Pacific: +86 0 400 820 6015
UK: +44 800 267 666

For additional support numbers please visit www.te.com

Application Tooling

AMP-O-LECTRIC Machine

Substantial savings and the benefits of mass production are obtained with the AMP-BLADE Printed Circuit Connector through the use of AMP automatic machines. The AMP-BLADE receptacle contacts are available in strip form for this use (see table on AMP-BLADE receptacle contacts) and can be terminated to wire leads at rates up to 1500 per hour, depending on operator skill. Contact TE Connectivity for complete specifications and part numbers.

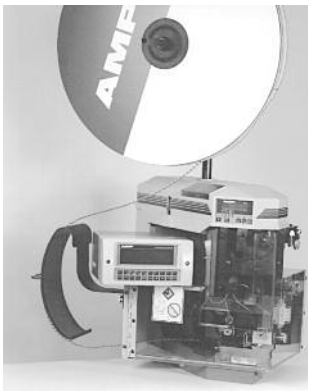

Extraction Tool

Receptacle Contact Extraction Tool
Part Number 465199-1
Military Part Number M21097/18-01

Hand Crimping Tools

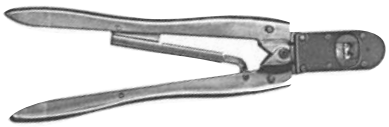

Hand Tool Part Number	Loose-Piece Receptacle Contact Part Number	Wire Combinations
91555-1	66010 531586	One 24, one 22 or one 20
	66010	Two 24 or two 22
59524-1	66010	One 22 or one 20
	66011	One 26 or one 24
	531587	One 28, one 26 or one 24
59525-1	66026 531589	Two 22 or two 20
90005-1	66026 531589	Two 20, one 18 or one 20 Two 22 or three 22

Catalog 1308940
Revised 9-14

www.te.com

Dimensions are shown for reference purposes only. Specifications subject to change.

Dimensions are in millimeters unless otherwise specified.

USA: +1 800 522 6752
Asia Pacific: +86 0 400 820 6015
UK: +44 800 267 666

For additional support numbers please visit www.te.com

Table of Contents

RF Connectors
Military Specifications 2-4
N Series Connectors 2-5, 2-6
BNC Connectors 2-7, 2-8
TNC Connectors 2-9, 2-10
SMA Connectors
Introduction . . . . . 2-11 to 2-13
For Flexible Cable . . . . . 2-14 to 2-20
Panel Mount 2-21
For Semi-Rigid Cable . . . . . 2-22 to 2-25
Printed Circuit Mount 2-26
In-Series Adapters MIL-A-55339 2-26
SMA Receptacles MIL-C-83517
Panel Mount . . . . . 2-27 to 2-29
Surface Launch 2-30
End Launch 2-31
Field Replaceable Launchers 2-32
Between Series Adapters for Semi-Rigid and Flexible Cable 2-33, 2-34
Push-On Coaxial Connectors
SMPM Microminiature Connectors 2-35, 2-46
Multi-position Backplane RF Modules 2-37, 2-38
SMP Microminiature Connectors . . . . . 2-39 to 2-43
Between Series Adapters 2-43
Miscellaneous 2-43
OSSP Subminiature Modular Blind Mate Connectors . . . . . 2-44 to 2-49
OSP (BMA) Miniature Modular Blind Mate Connectors . . . . . 2-50 to 2-61
Threaded Connectors
OSMM Microminiature Connectors
Introduction 2-62, 2-63
For Flexible and Semi-Rigid Cables 2-64
SSMA Subminiature Connectors
Introduction . . . . . 2-65 to 2-67
For Semi-Rigid Cable 2-68
For Flexible Cable 2-69
Panel Mount Receptacles 2-70
Bulkhead Mount Receptacles 2-70
Panel Mount Receptacles 2-71
Printed Circuit Boards 2-71
Microstrip Transmission Line Circuits 2-71
Hermetically Sealed 2-72, 2-73
In-Series Adapters 2-74
High Frequency for Semi-Rigid Cable 2-75

Catalog 1308940
Revised 9-14

www.te.com

Dimensions are shown for reference purposes only. Specifications subject to change.

Dimensions are in millimeters unless otherwise specified.

USA: +1 800 522 6752
Asia Pacific: +86 0 400 820 6015
UK: +44 800 267 666

For additional support numbers please visit www.te.com

Coaxial Cable Termination
One-Step BNC/TNC Connectors . . . . . 2-76 to 2-81
Application Tooling . . . . . 2-82 to 2-87
Cross Reference . . . . . 2-88 to 2-92
Cheminax Coaxial Cables Cross Reference 2-92
Nanonics Coaxial Connectors
Introduction 2-93
Typical VSWR and Insertion Loss 2-94
50 Ohm Coax Connectors 2-95
Part Numbering Guideline for 50 Ohm Coax Connectors 2-96
Horizontal SMT 50 Ohm Coax Connectors 2-97
Part Numbering Guideline for Horizontal SMT 50 Ohm Coax Connectors 2-98
50 Ohm Coax with Mixed Signal Connectors 2-99
Part Numbering Guideline for 50 Ohm Coax with Mixed Signal Connectors 2-100
Part Number Index Cross Reference 2-101
MICRODOT Coaxial Connectors
Introduction 2-102
Standard Connectors
Performance Data Summary 2-103
Screw-On Series . . . . . 2-104 to 2-109
Slide-On Series . . . . . 2-110 to 2-113
Quick-Connect Series . . . . . 2-114 to 2-116
Twinax Series 2-117
Triax Series and Terminals 2-118
Module Blocks 2-119
Caps for Screw-On Series, Receptacle Hoods 2-120
Feed Thru Adapters for Screw-On Series 2-121
BNC and TNC Adapters for Screw-On, Slide-On, Quick-Connect Series 2-121, 2-122
Gold Plated Crimp Style Coaxial Connector Series
Performance Data Summary 2-123
Screw-On Series . . . . . 2-124 to 2-127
Assembly Tools 2-127
LEPRA/CON Ultra-Miniature Connectors
Performance Data Summary 2-128
Screw-On Series — Standard Interface 2-129, 2-130
Screw-On Series — Locking Interface 2-131, 2-132
Slide-On Series 2-133, 2-134
Assembly Tools 2-134
BNC / LEPRA/CON Adapters 2-135, 2-136
Snap-Lock Series 2-137
Cable Assemblies 2-138, 2-139
Cable Acceptance Dimensions . . . . . 2-140 to 2-145
Hermetic Connectors
Coaxial Screw-On, Slide-On Series 2-146, 2-147

Catalog 1308940
Revised 9-14

www.te.com

Dimensions are shown for reference purposes only. Specifications subject to change.

Dimensions are in millimeters unless otherwise specified.

USA: +1 800 522 6752
Asia Pacific: +86 0 400 820 6015
UK: +44 800 267 666

For additional support numbers please visit www.te.com

Appendix

A - Theory and Application . . . . . .2-148 to 2-153
B - Typical Coaxial Cable Specifications . . . . . .2-154 to 2-156
C - Maximum Power Handling Capabilities for Cables 2-157
D - Nominal Loss Characteristics for Cables 2-158

Catalog 1308940
Revised 9-14

www.te.com

Dimensions are shown for reference purposes only. Specifications subject to change.

Dimensions are in millimeters unless otherwise specified.

USA: +1 800 522 6752
Asia Pacific: +86 0 400 820 6015
UK: +44 800 267 666

For additional support numbers please visit www.te.com

Military Specifications

MIL-PRF-39012

- **Defines the general requirements and tests for radio frequency (RF) connectors used with flexible RF cables and certain other types of coaxial transmission lines. It includes the following series of connectors in this catalog: N, BNC, TNC, SMA**

MIL-C-55339

- **Defines the performance requirements and tests for between series and within series, RF coaxial connector adapters. The In-Series Adapters are shown in this catalog**

MIL-C-83517

- **Defines the general requirements and test for RF connectors used with coaxial, strip, or microstrip transmission line devices. It includes the SMA Receptacles as shown in this catalog**

Definition of Categories for MIL-PRF-39012

Category A — Flexible Cable
Field serviceable, no special tools required to assemble. Standard wrenches, soldering equipment, pliers, etc., are not defined as special tools. Captured center contact.

Category B — Flexible & Semi-Rigid Cable
Non-field replaceable, special tools may be required. These connectors may be used for original installations. Field replacement is intended to be made by Category A or C Connectors. Will not be stocked or procured by the Government. Captured and non-captured center contacts.

Category C — Flexible Cable
Field replaceable. Requires crimp tool and specified cable stripping dimensions. Captured center contact. Recommended crimp tool kit: Part Number 1055236-1.

Category D — Flexible Cable
Field replaceable. Requires crimp tool for center contact and outer ferrule; specified cable stripping dimensions (same as Category C) and defined piece parts. Captured center contact. Recommended crimp tool kit: Part Number 1055236-1.

Category E — Semi-Rigid Cable
Field replaceable. Requires specified cable stripping dimensions. Captured and non-captured center contact. Uses standard tool kit: Part Number 1055420-1.

Category F — Semi-Rigid Cable
Field replaceable. Requires crimp tool and specified cable stripping dimensions. Captured center contact. Recommended crimp tool kit: Part Number 1055835-1.

Dimensions are shown for reference purposes only. Specifications subject to change.

Dimensions are in millimeters unless otherwise specified.

USA: +1 800 522 6752
Asia Pacific: +86 0 400 820 6015
UK: +44 800 267 666

For additional support numbers please visit www.te.com

N Series Connectors (MIL-PRF-39012)

Product Facts

- **Dual "O" Crimp connectors are MIL-PRF-39012, Class II, Category B qualified**
- **COTS equivalent parts available**
- **Captive center contacts**
- **Completely crimpable application – one hand tool crimps all cables with single or double braided shields of a given size**
- **Impedance matching crimps**
- **Broad band performance – low VSWR**
- **Superior cable retention**
- **PTFE dielectric**

The TE Connectivity N Series Connector, featuring a .625 [15.88] - 24 threaded coupling for optimum stability, is highly suited for critical applications and environments. This medium sized connector can withstand shock and vibration for a low noise level and has a constant impedance of 50 ohms. It also features a captive center contact and provides excellent performance at frequencies up to 11 GHz, with voltages to 1000 volts rms.

This connector offers the added benefits of low overall applied cost with a labor-saving two-crimp assembly. The contact is simply crimped to the cable's center conductor, then both braid and cable support are simultaneously crimped to complete the termination.

N Series Connectors are available in standard plug, jack, bulkhead jack and right-angle plug configurations.

Materials

Brass — QQ-B-626
Beryllium Copper — QQ-C-530
Dielectric — PTFE
PTFE — MIL-P-19468
Copper, Annealed — QQ-C-576
Phosphor Bronze — QQ-B-750
Silicone Rubber — ZZ-R-765

Plating

Body —
Silver per QQ-S-365
Center Contact —
Gold per ASTM B488, type 3, grade C

Electrical Characteristics

Nominal Impedance — 50 ohms
Working Voltage — 1000 volts, rms at sea level
Frequency Range — 0 to 11 GHz
Voltage Standing Wave Ratio (VSWR) — Straight Plug or Jack- 1.3:1 max.
Right-Angle Plug —
1.35 max. at 0 to 9.0 GHz
1.50 max. at 9.0 to 11.0 GHz
Contact Resistance —
Outer Contact — 0.2 milliohms
Center Contact — 1.0 milliohms
Right-Angle — 2.5 milliohms
Insulation Resistance —
5000 megohms min.
Dielectric Withstanding Voltage —
2500 Volts, rms at sea level
RF Leakage — -90 dB min. at 2 to 3 GHz
RF Insertion Loss — 0.15 dB max. at 10 GHz; Right-Angle Plug, 0.3 dB max. at 10 GHz
Corona Level — 500 volts min. at 21 336 m [70,000 ft.]

Mechanical Characteristics

Mating/Unmating — Threaded coupling
Cable Attachment — Crimp type - center contact and braid
Coupling Nut Retention — 445 N [100 lbs.] min.
Cable Retention — 400 N [90 lbs.] min. RG 214/U Cable
Durability — 500 cycles per MIL-PRF-39012
Captive Contact — 27 N [6 lbs.] min. axial retention, either direction

Environmental Characteristics

Temperature Range —
-85°F to +329°F [-65°C to +165°C]
Vibration — MIL-STD-202, Method 204, Test Cond. B
Shock — MIL-STD-202, Method 213, Test Cond. I
Moisture Resistance — MIL-STD-202 Method 106
Salt Spray — MIL-STD-202, Method 101, Test Cond B
Temperature Cycling — MIL-STD-202, Method 107, Test Cond. B (except high temperature is +85°C)

Note: All data pertains to use with MIL-PRF-39012 specified cables only.

Termination Tooling

Integral Die —
Hand Tool Part Number 220015-1

Catalog 1308940
Revised 9-14

www.te.com

Dimensions are shown for reference purposes only. Specifications subject to change.

Dimensions are in millimeters unless otherwise specified.

USA: +1 800 522 6752
Asia Pacific: +86 0 400 820 6015
UK: +44 800 267 666

For additional support numbers please visit www.te.com

N Series Connectors (MIL-PRF-39012) (Continued)

Plugs
MIL-PRF-39012/01

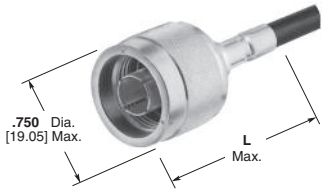

Plugs

TE Part No.	Reference Part No.	Military PN M39012/01	Notes	Termination Style	Body Plating	Dim L	RG/U Cable
225092-7	—	B0012	Weatherproof	Crimp	Silver	**1.859** [47.22]	225
1-225092-1	—	—	Weatherproof	Crimp	Silver	**1.859** [47.22]	393
51692-4	—	B0013		Crimp	Silver	**1.687** [42.85]	11, 11A, 216
225392-2	—	—	Weatherproof	Crimp	Silver	**1.687** [42.85]	142, 142A, 142B, 400
225361-4	—	—		Crimp	Silver	**1.687** [42.85]	142, 142A, 142B, 400
225361-2	—	—		Crimp	Silver	**1.687** [42.85]	223, 55, 55A, 55B
225361-1	—	—		Crimp	Silver	**1.687** [42.85]	58, 58A, 58B, 58C
1-225661-2	—	—		Crimp	Nickel	**1.687** [42.85]	58, 58A, 58B, 58C
225092-2	—	B0007	Weatherproof	Crimp	Silver	**1.859** [47.22]	8, 8A, 213
51692-2	—	B0007		Crimp	Silver	**1.687** [42.85]	8, 8A, 213
225661-2	—	—		Crimp	Nickel	**1.687** [42.85]	8, 8A, 213
225092-1	—	B0008	Weatherproof	Crimp	Silver	**1.859** [47.22]	9, 9A, 9B, 214
51692-1	—	B0008		Crimp	Silver	**1.687** [42.85]	9, 9A, 9B, 214
225661-1	—	—		Crimp	Nickel	**1.687** [42.85]	9, 9A, 9B, 214
1057088-1	3001-7941-00	—		Solder	Passivate / Gold	**0.970** [24.60]	402 semirigid (.141 dia)
1057094-1	3001-7985-00	—		Solder	Passivate / Gold	**0.970** [24.60]	405 semirigid (.086 dia)

Jacks
MIL-PRF-39012/02

Jacks

TE Part No.	Reference Part No.	Military PN M39012/02	Notes	Termination Style	Body Plating	Dim L	RG/U Cable
225093-2	—	B0008		Crimp	Silver	**1.937** [49.19]	8, 8A, 213
225664-2	—	—	Weatherproof	Crimp	Nickel	**1.937** [49.19]	8, 8A, 213
225093-7	—	—		Crimp	Silver	**1.937** [49.19]	225
1057116-1	3002-7941-00	—		Solder	Passivate / Gold	**1.050** [26.70]	402 semirigid (.141 dia)

Bulkhead Jacks
MIL-PRF-39012/03

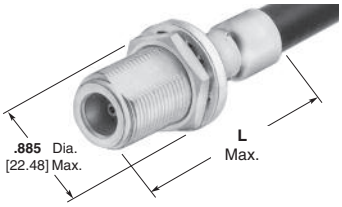

Bulkhead Jacks

TE Part No.	Reference Part No.	Military PN M39012/03	Notes	Termination Style	Body Plating	Dim L	RG/U Cable
225094-2	—	B0004	Weatherproof	Crimp	Silver	**2.125** [53.98]	8, 8A, 213
225094-1	—	B0005	Weatherproof	Crimp	Silver	**2.125** [53.98]	9, 9A, 9B, 214
1-225668-1	—	—	Weatherproof	Crimp	Nickel	**2.125** [53.98]	393
1057140-1	3004-7388-10	—		Clamp	Nickel	**1.125** [28.60]	174, 179, 187, 188, 316
1057138-1	3004-7341-10	—		Clamp	Nickel	**1.125** [28.60]	55, 58, 141, 142, 223, 303
1057159-1	3004-7941-00	—		Solder	Passivate / Gold	**1.335** [33.90]	402 semirigid (.141 dia)
1058628-1	3604-7841-02	—	18 GHz	Solder	Passivate / Gold	**1.125** [28.60]	402 semirigid (.141 dia)
1057165-1	3004-7985-00	—		Solder	Passivate / Gold	**1.335** [33.90]	405 semirigid (.086 dia)

Flange Mount Cable Jacks

TE Part No.	Reference Part No.	Termination Style	Body Plating	Dim L	RG/U Cable
1057176-1	3006-7941-00	Solder	Passivate / Gold	**1.000** [25.40]	402 semirigid (.141 dia)
1057178-1	3006-7985-00	Solder	Passivate / Gold	**1.000** [25.40]	405 semirigid (.086 dia)

Right-Angle Plugs
MIL-PRF-39012/05

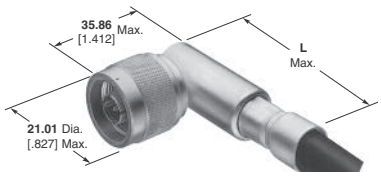

Right Angle Plugs

TE Part No.	Reference Part No.	Military PN M39012/05	Notes	Termination Style	Body Plating	Dim L	RG/U Cable
225014-2	—	B0002		Crimp	Silver	**2.275** [57.79]	8, 8A, 213
225389-2	—	B0002	Weatherproof	Crimp	Silver	**2.453** [62.31]	8, 8A, 213
225669-2	—	—		Crimp	Nickel	**2.275** [57.79]	8, 8A, 213
225014-3	—	B0003		Crimp	Silver	**2.275** [57.79]	9, 9A, 9B, 214
225389-6	—	—	Weatherproof	Crimp	Silver	**2.453** [62.31]	393
225389-3	—	—	Weatherproof	Crimp	Silver	**2.453** [62.31]	225

Panel Mount Receptacles

TE Part No.	Reference Part No.	Interface	Termination Style
1057275-1	3051-0000-10	Plug	solder cup
1057284-1	3052-0000-10	Jack	solder cup
1057279-1	3051-1201-10	Plug	straight post
1057290-1	3052-1201-10	Jack	straight post
1057293-1	3052-1648-10	Jack	contact tab

Dimensions are shown for reference purposes only. Specifications subject to change.

Dimensions are in millimeters unless otherwise specified.

USA: +1 800 522 6752
Asia Pacific: +86 0 400 820 6015
UK: +44 800 267 666

For additional support numbers please visit www.te.com

BNC Connectors (MIL-PRF-39012)

Product Facts

- **Dual "O" Crimp Connectors are MIL-PRF-39012, Class II, Category A or B qualified**
- **COTS equivalent parts available**
- **Bayonet lock coupling for quick connect/disconnect**
- **Various connectors available in 50 ohm versions**
- **Fully intermateable with comparable BNC UG/U connectors**
- **Low VSWR**

Related Product Data

Performance Specifications — See chart below

Material Specifications — See chart below

Military Category — All MIL type "O" crimp connectors are Category B Type (TE Connectivity Crimp Tooling), unless otherwise noted.

Packaging — All connectors are packaged individually.

The TE Connectivity BNC RF connector family with bayonet locking coupling provides highly reliable, quick connect/disconnect coaxial connections. Exclusive "O" crimp terminations allow positive insulation grip and require no soldering, providing terminations at a very low overall applied cost.

Available in 50 ohm versions, these connectors feature numerous styles including cable plugs and jacks. These connectors accept a wide range of coaxial cables and are intermateable with industry standard connectors designed to MIL-PRF-39012 specifications.

Characteristics	Category B "O" Crimp (MIL Type)
Electrical	
Impedance, Nom. (Ohms)	50
Working Voltage (Volts RMS)	500
Contact Resistance (Milliohms)	Inner: 1.5 Outer: 2.0
Initial Insulation Resistance (Megohms)	5000
Dielectric Withstanding Voltage (VAC)	1500
Corona Level at 70,000 ft. (Volts, RMS)	375
RF Leakage, Max. (dB)	-55 at 2-3 GHz
RF Insertion Loss, Max. (dB)	0.2 at 3 GHz
Frequency Range (GHz)	0-4
VSWR in Frequency Range Max.	1.30
Mechanical	
Force to Engage (lbs. [N])/couple, (in-lbs. [N-M]) max.	13.3/11.12 [3/2.5]
Coupling Nut Retention, Min. N [lbs.]	444.8 [100]
Cable Retention, N [lbs.]	266.9 [60] (RG58C/U)
Durability (Cycles)	500
Jam Nut Mounting Torque, Max. [N•m] (in. lbs.)	25 [2.8]
Environmental	
Temperature Range, Operating (C°)	-65 to +165[1] / -55 to +85[2]
Vibration	MIL-STD-202 Method 204 Cond. B
Physical Shock	MIL-STD-202 Method 213 Cond. G, 50 G's
Thermal Shock	MIL-STD-202 Method 107
Moisture Resistance	MIL-STD-202 Method 106
Salt Spray	MIL-STD-202 Method 101 Cond. B
Product Specification	108-12020

[1] Assembled to cable with polytetrafluoroethylene dielectric.
[2] Assembled to cable with polyethylene dielectric.

Connector Component	Category A & B "O" Crimp (MIL Type)
Connector Material	
Collar	Brass, QQ-B-626
Outer Contact (Plug)	Phos. Bronze, QQ-B-750
Shell (Jack)	Brass, QQ-B-626
Dielectric	PTFE, MIL-P-19468
Center Contact (Plug)	Brass, QQ-B-626
Center Contact (Jack)	Beryl. Copper, ASTM-B-643 QQ-C-530
Gasket	Silicon Rubber, QQ-R-765
Ferrule	Copper, QQ-C-576
Connector Primary Finishes[1]	
Collar	Silver, QQ-S-365 Bright Nickel, QQ-N-290
Outer Contacts (Plug & Jack)	Silver, QQ-S-365 Bright Nickel, QQ-N-290
Center Contacts (Plug & Jack)	Gold MIL-G-45204
Ferrule[2]	Silver, QQ-S-365 Tin Lead, ASTM-B-545

[1] If more than one finish is listed, refer to individual catalog page(s) or customer drawings for exact specification.
[2] Ferrules with tin-lead finish are used with nickel plated outer contacts.

Catalog 1308940
Revised 9-14

www.te.com

Dimensions are shown for reference purposes only. Specifications subject to change.

Dimensions are in millimeters unless otherwise specified.

USA: +1 800 522 6752
Asia Pacific: +86 0 400 820 6015
UK: +44 800 267 666

For additional support numbers please visit www.te.com

BNC Connectors (MIL-PRF-39012) (Continued)

Plugs
MIL-PRF-39012/16

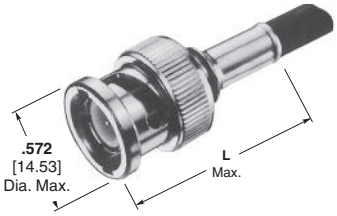

Jacks
MIL-PRF-39012/17

Bulkhead Jacks
MIL-PRF-39012/19

H = 11/16" across flats,
.800 [20.32] Max. across points

Field Serviceable Bulkhead Jack
MIL-PRF-39012/19

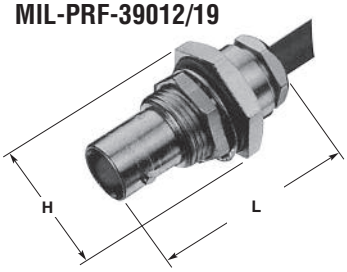

H = 11/16" across flats,
.800 [20.32] Max. across points

Right Angle Plugs

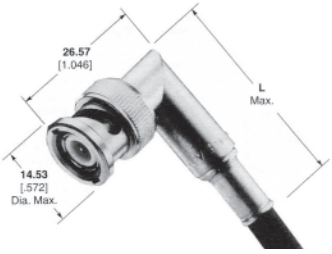

Plugs

TE Part No.	Military PN M39012/16	Termination Style	Body Plating	Dim L	RG/U Cable
8-331350-0	—	Crimp	Silver	**1.188** [30.18]	174, 188, 316
5225395-7	—	Crimp	Nickel	**1.188** [30.18]	174, 188, 316
9-331350-3	—	Crimp	Silver	**1.188** [30.18]	179, 187
5225395-8	—	Crimp	Nickel	**1.188** [30.18]	179, 187
2-331350-1	B0004	Crimp	Silver	**1.188** [30.18]	58, 58A, 58B, 58C
5225395-1	—	Crimp	Nickel	**1.188** [30.18]	58, 58A, 58B, 58C
5225395-3	—	Crimp	Nickel	**1.188** [30.18]	55, 223
5225395-5	—	Crimp	Nickel	**1.188** [30.18]	141
2-331350-9	B0007	Crimp	Silver	**1.188** [30.18]	142, 400
5225395-6	—	Crimp	Nickel	**1.188** [30.18]	142, 400
331350	B0008	Crimp	Silver	**1.188** [30.18]	59, 59A, 59B, 62, 62A, 62B, 124, 140, 210, Belden 9291, 9209, 9269
5225395-2	—	Crimp	Nickel	**1.188** [30.18]	59, 59A, 59B, 62, 62A, 62B, 124, 140, 210, Belden 9291, 9209, 9269
221265-1	—	Solder/clamp	Silver	**1.250** [31.75]	58, 141, 142, 55, 223, 400
1-221265-0	—	Solder/clamp	Nickel	**1.250** [31.75]	58, 141, 142, 55, 223, 400
221265-2	—	Solder/clamp	Silver	**1.250** [31.75]	59, 62, 71, 210
1-221265-1	—	Solder/clamp	Nickel	**1.250** [31.75]	59, 62, 71, 210

Jacks

TE Part No.	Military PN M39012/17	Termination Style	Body Plating	Dim L	RG/U Cable
2-331351-4	—	Crimp	Silver	**1.200** [30.48]	174, 188, 316
5225396-7	—	Crimp	Nickel	**1.200** [30.48]	174, 188, 316
2-331351-1	B0004	Crimp	Silver	**1.200** [30.48]	58, 58A, 58B, 58C
5225396-1	—	Crimp	Nickel	**1.200** [30.48]	58, 58A, 58B, 58C
331351	B0008	Crimp	Silver	**1.200** [30.48]	59, 59A, 59B, 62, 62A, 62B, 124, 140, 210, Belden 9291, 9209, 9269
5225396-2	—	Crimp	Nickel	**1.200** [30.48]	59, 59A, 59B, 62, 62A, 62B, 124, 140, 210, Belden 9291, 9209, 9269

Bulkhead Jacks

TE Part No.	Military PN M39012/19	Termination Style	Body Plating	Dim L	RG/U Cable
1-331693-2	—	Crimp	Silver	**1.406** [35.71]	174, 188, 316
5225398-7	—	Crimp	Nickel	**1.375** [34.93]	174, 188, 316
5225398-8	—	Crimp	Nickel	**1.375** [34.93]	179, 187
1-331693-1	B0003	Crimp	Silver	**1.406** [35.71]	58, 58A, 58B, 58C
5225398-1	—	Crimp	Nickel	**1.375** [34.93]	58, 58A, 58B, 58C
331693	B0007	Crimp	Silver	**1.406** [35.71]	59, 59A, 59B, 62, 62A, 62B, 124, 140, 210, Belden 9291, 9209, 9269
5225398-3	—	Crimp	Nickel	**1.500** [38.10]	55, 223
5225398-6	—	Crimp	Nickel	**1.500** [38.10]	142, 400

Right Angle Plugs

TE Part No.	Military PN M39012/	Termination Style	Body Plating	Dim L	RG/U Cable
5225974-1	—	Crimp	Nickel	**1.540** [39.12]	58
5225974-5	—	Crimp	Nickel	**1.468** [37.29]	59, 59A, 59B, 62, 62A, 62B, 124, 140, 210, Belden 9291, 9209, 9269

Catalog 1308940
Revised 9-14

www.te.com

Dimensions are shown for reference purposes only. Specifications subject to change.

Dimensions are in millimeters unless otherwise specified.

USA: +1 800 522 6752
Asia Pacific: +86 0 400 820 6015
UK: +44 800 267 666

For additional support numbers please visit www.te.com

TNC Connectors (MIL-PRF-39012)

Product Facts

- **Dual "O" Crimp Connectors are MIL-PRF-39012, Class II, Category B qualified**
- **COTS equivalent parts available**
- **Provides excellent performance at frequencies up to 11 GHz**
- **Standard and weatherproof versions available**
- **Plugs available for high temperature cable**

Related Product Data

Military Category—All crimp connectors are Category B Type (TE Connectivity Crimp Tooling), unless otherwise noted.
Packaging—All connectors are packaged individually.

The TE Connectivity TNC RF connector family, with 7/16-28 threaded couplings, provides low noise levels and optimum stability, and can withstand the shock and vibration often present in harsh environments.

Available in 50 ohm versions, these connectors feature cable plugs and jacks. These connectors accept a wide range of coaxial cables and are intermateable with industry standard connectors designed to MIL-PRF-39012 specifications.

Characteristics	Category B "O" Crimp (MIL Type)
Electrical	
Impedance, Nom. (Ohms)	50
Working Voltage (Volts RMS)	500
Contact Resistance (Milliohms)	Inner: 1.5 Outer: 0.2
Initial Insulation Resistance (Megohms)	5000
Dielectric Withstanding Voltage (VAC)	1500
Corona Level at 70,000 ft. (Picocoulombs)	5 max. @375 VRMS
RF Leakage, Max. (dB)	60 at 2-3 GHz
RF Insertion Loss, Max. (dB)	0.18 at 9 GHz
Frequency Range (GHz)	0-11
VSWR in Frequency Range Max.	1.3
Mechanical	
Force to Engage/Couple, lbs. [N]	2/2 [8.9/8.9]
Coupling Nut Retention, Min. lbs. [N]	100 [444.8]
Cable Retention, lbs. [N]	60 [266.9] RG58C/U
Durability (Cycles)	500
Jam Nut Mounting Torque, Max. lbs. [N•m]	25 [2.8]
Environmental	
Temperature Range, Operating (C°)	-65 to +165[1] / -55 to +85[2]
Vibration	MIL-STD-202 Method 204 Cond. B
Physical Shock	MIL-STD-202 Method 213 Cond. I, (100 G's)
Thermal Shock	MIL-STD-202 Method 107 Cond. B
Moisture Resistance	MIL-STD-202 Method 106
Salt Spray	MIL-STD-202 Method 101 Cond. B
Product Specification	108-12001

[1] Assembled to cable with polytetrafluoroethylene dielectric.
[2] Assembled to cable with polyethylene dielectric.

Characteristics	Category B "O" Crimp (MIL Type)
Connector Material	
Collar	Brass, QQ-B-626
Outer Contact (Plug)	Phos. Bronze, QQ-B-750 Beryl. Copper, QQ-C-530
Outer Contact (Jack)	Brass, QQ-B-626
Dielectric	PTFE, MIL-P-19468
Center Contact (Plug)	Brass, QQ-B-626
Center Contact (Jack)	Beryl. Copper, ASTM-B-643 QQ-C-530
Gasket	Silicon Rubber, QQ-R-765
Ferrule	Copper, QQ-C-576
Connector Primary Finishes[1]	
Collar	Silver, QQ-S-365
Outer Contact (Plug & Jack)	Bright Nickel, QQ-N-290
Center Contact (Plug & Jack)	Silver, QQ-S-365
Ferrule	Gold, MIL-G-45204

[1] If several finishes are listed, refer to individual catalog page(s) or customer drawings for exact specification.

Catalog 1308940
Revised 9-14

www.te.com

Dimensions are shown for reference purposes only. Specifications subject to change.

Dimensions are in millimeters unless otherwise specified.

USA: +1 800 522 6752
Asia Pacific: +86 0 400 820 6015
UK: +44 800 267 666

For additional support numbers please visit www.te.com

TNC Connectors (MIL-PRF-39012) (Continued)

Plugs
MIL-PRF-39012/26 (Weatherproof)

Plugs

TE Part No.	Reference Part No.	Military PN M39012/26	Notes	Termination Style	Body Plating	Dim L	RG/U Cable
225550-2	—	B0005	Weatherproof	Crimp	Silver	**1.375** [34.93]	58, 58A, 58B, 58C
5225555-2		—	Weatherproof	Crimp	Nickel	**1.375** [34.93]	58, 58A, 58B, 58C
225550-1		B0016	Weatherproof	Crimp	Silver	**1.375** [34.93]	55, 55A, 55B, 223
225550-6		B0006	Weatherproof	Crimp	Silver	**1.375** [34.93]	142, 142A, 142B, 400
225345-6		B0006		Crimp	Silver	**1.343** [34.11]	142, 142A, 142B, 400
5-225345-6		—		Crimp	Silver	**1.343** [34.11]	142, 142A, 142B, 400
5225555-6		—	Weatherproof	Crimp	Nickel	**1.375** [34.93]	142, 142A, 142B, 400
225550-3		B0007	Weatherproof	Crimp	Silver	**1.375** [34.93]	59, 59A, 59B, 62, 62A, 62B, 124, 140, 210, Belden 9291, 9209, 9269
5225555-5		—	Weatherproof	Crimp	Nickel	**1.375** [34.93]	141
1-225550-2		—	Weatherproof	Crimp	Silver	**2.000** [50.80]	225
1-225550-3		—	Weatherproof	Crimp	Silver	**1.995** [50.67]	393
5225555-7		—	Weatherproof	Crimp	Nickel	**2.000** [50.80]	8, 213
5225555-8		—	Weatherproof	Crimp	Nickel	**2.000** [50.80]	9, 214
1057635-1	3101-7985-00	—		Solder	Passivate / Gold	**0.770** [19.60]	405 semirigid (.086 dia)
1057631-1	3101-7941-00	—		Solder	Passivate / Gold	**0.770** [19.60]	402 semirigid (.141 dia)

Jacks
MIL-PRF-39012/27 (Weatherproof)

Jacks

TE Part No.	Reference Part No.	Military PN M39012/27	Notes	Termination Style	Body Plating	Dim L	RG/U Cable
225551-2		B0005	Weatherproof	Crimp	Silver	**1.406** [35.72]	58, 58A, 58B, 58C
225551-5		B0015	Weatherproof	Crimp	Silver	**1.406** [35.72]	141, 141A, 303
225551-1		B0016	Weatherproof	Crimp	Silver	**1.406** [35.72]	55, 55A, 55B, 223
225551-6		B0006	Weatherproof	Crimp	Silver	**1.406** [35.72]	142, 142A, 142B, 400

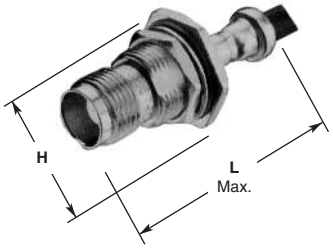

Bulkhead Jacks

TE Part No.	Reference Part No.	Military PN M39012/	Notes	Termination Style	Body Plating	Dim L	RG/U Cable
5225557-2		—	Weatherproof	Crimp	Nickel	**1.500** [38.10]	58, 58A, 58B, 58C
5225557-6		—	Weatherproof	Crimp	Nickel	**1.500** [38.10]	142, 142A, 142B, 400
1057679-1	3104-7985-00	—		Solder	Passivate / Gold	**1.200** [30.50]	405 semirigid (.086 dia)
1057676-1	3104-7941-00	—		Solder	Passivate / Gold	**1.200** [30.50]	402 semirigid (.141 dia)

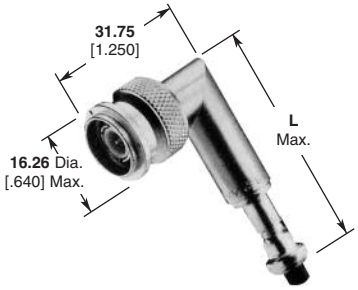

Right Angle Plugs

TE Part No.	Reference Part No.	Military PN M39012/	Notes	Termination Style	Body Plating	Dim L	RG/U Cable
5225554-2		—	Weatherproof	Crimp	Silver	**2.500** [63.50]	58, 58A, 58B, 58C
5225559-2		—	Weatherproof	Crimp	Nickel	**2.500** [63.50]	58, 58A, 58B, 58C
5225554-6		—	Weatherproof	Crimp	Silver	**2.500** [63.50]	142, 142A, 142B, 400
1-5225554-1		—	Weatherproof	Crimp	Silver	**2.500** [63.50]	393
5225559-8		—	Weatherproof	Crimp	Nickel	**2.500** [63.50]	8,213
5225554-9		—	Weatherproof	Crimp	Silver	**2.500** [63.50]	9,214

Panel Jack
MIL-PRF-39012/29

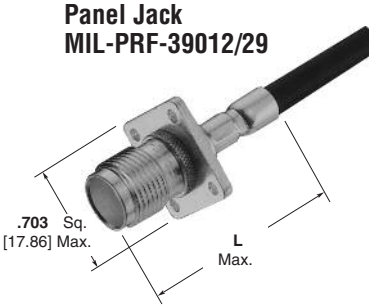

Flange Mount Cable Jacks

TE Part No.	Reference Part No.	Military PN M39012/29	Notes	Termination Style	Body Plating	Dim L	RG/U Cable
225348-2		B0005		Crimp	Solder	**1.375** [34.93]	58, 58A, 58B, 58C
1057699-1	3106-7985-00	----		Solder	Passivate / Gold	**0.900** [22.90]	405 semirigid (.086 dia)
1057697-1	3106-7941-00	----		Solder	Passivate / Gold	**0.900** [22.90]	402 semirigid (.141 dia)

Panel Mount Receptacles

TE Part No.	Reference Part No.	Interface	Termination Style
1057775-1	3152-0000-10	TNC jack	solder cup
1057780-1	3152-1201-10	TNC jack	solder post

Catalog 1308940
Revised 9-14

www.te.com

Dimensions are shown for reference purposes only. Specifications subject to change.

Dimensions are in millimeters unless otherwise specified.

USA: +1 800 522 6752
Asia Pacific: +86 0 400 820 6015
UK: +44 800 267 666

For additional support numbers please visit www.te.com

SMA Connectors (MIL-PRF-39012) — Introduction

Product Facts

- **Performance to 18 GHz**
- **Uses industry standard crimp tools and processes**
- **Qualified to MIL-PRF-39012**
- **COTS equivalent parts available**

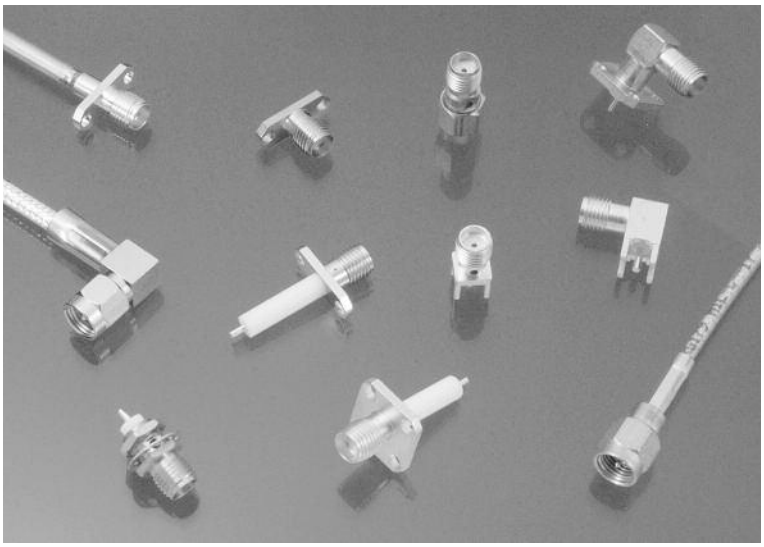

TE Connectivity offers a complete line of SMA connectors. To satisfy the broad range of applications, SMA connectors are available in a broad range of standard configurations including; straight and right-angle cable applied plugs, bulkhead cable jacks, two and four hole flange mount panel jacks, straight and right-angle pcb mount jacks and various between and in-series adapters, including connectors for semi-rigid cable and micro-strip applications.

Catalog 1308940
Revised 9-14

www.te.com

Dimensions are shown for reference purposes only. Specifications subject to change.

Dimensions are in millimeters unless otherwise specified.

USA: +1 800 522 6752
Asia Pacific: +86 0 400 820 6015
UK: +44 800 267 666

For additional support numbers please visit www.te.com

SMA Connectors (MIL-PRF-39012) — Introduction (Continued)

Electrical Properties

MIL Type	Cable Military Slash Sheet M17/	Frequency Max. (GHz)	VSWR (fGHz)	Contact Resistance (milliohms max.)		Insulation Resistance (megohms min.)	Dielectric Withstanding Voltage (Volts RMS)	Corona Extinction Voltage at 70,000 Ft. (V RMS min.)	RF Transmission Loss (GHz)	RF High Potential at 5 MHz (V RMS)	RF Leakage (dB min.)
				Center Contact	Outer Contact						
MIL-PRF-39012/55	93-RG178	12.4	1.20+0.025	3	2	5,000	500	125	0.06 x sqrt (freq)	335	-60
	54-RG122, 119-RG174, 94-RG179, 113-RG316, 152-	12.4	1.15+0.02	3	2	5,000	750	190	0.06 x sqrt (freq)	500	-60
	28-RG058, 60-RG142, 84-RG223, 111-RG303, 128-RG400	12.4	1.15+0.01	3	2	5,000	1000	250	0.06 x sqrt (freq)	670	-60
	169-00001	12.4	1.15+0.01	3	2	5,000	500	125	0.06 x sqrt (freq)	335	-60
	173-00001, 172-00001, 157-00001	12.4	1.15+0.01	3	2	5,000	750	190	0.06 x sqrt (freq)	500	-60
	155-0001, 158-00001, 167-00001, 170-00001, 175-00001	12.4	1.15+0.01	3	2	5,000	1000	250	0.06 x sqrt (freq)	670	-60
MIL-PRF-39012/56	93-RG178	12.4	1.20+0.03	4	2	5,000	500	125	0.15 x sqrt (freq)	335	-60
	54-RG122, 119-RG174, 94-RG179, 113-RG316, 152-00001	12.4	1.15+0.03	4	2	5,000	750	190	0.15 x sqrt (freq)	500	-60
	28-RG058, 60-RG142, 84-RG223, 111-RG303, 128-RG400	12.4	1.15+0.02	4	2	5,000	1000	250	0.15 x sqrt (freq)	670	-60
	169-00001	12.4	1.15+0.02	4	2	5,000	500	125	0.15 x sqrt (freq)	335	-60
	173-00001, 172-00001 157-00001	12.4	1.15+0.02	4	2	5,000	750	190	0.15 x sqrt (freq)	500	-60
	155-0001, 158-00001, 167-00001, 170-00001, 175-00001	12.4	1.15+0.02	4	2	5,000	1000	250	0.15 x sqrt (freq)	670	-60
MIL-PRF-39012/57, /58 & /59	93-RG178	12.4	1.20+0.025	3	2	5,000	500	125	0.06 x sqrt (freq)	335	-60
	54-RG122, 119-RG174, 113-RG316	12.4	1.15+0.02	3	2	5,000	750	190	0.06 x sqrt (freq)	500	-60
	28-RG058, 60-RG142, 84-RG223, 111-RG303, 128-RG400	12.4	1.15+0.01	3	2	5,000	1000	250	0.06 x sqrt (freq)	670	-60
	169-00001	12.4	1.15+0.01	3	2	5,000	500	125	0.06 x sqrt (freq)	335	-60
	173-00001, 172-00001, 157-00001	12.4	1.15+0.01	3	2	5,000	750	190	0.06 x sqrt (freq)	500	-60
	155-0001, 158-00001, 167-00001, 170-00001, 175-00001	12.4	1.15+0.01	3	2	5,000	1000	250	0.06 x sqrt (freq)	670	-60
MIL-PRF-39012/60, & /61	—	N/A	N/A	3	2	5,000	1000	250	N/A	670	N/A
MIL-PRF-39012/79	133-RG405, 133-00001 Thru 133-00011 Captive	18	1.07+0.01	3	2	5,000	1000	250	0.03 x sqrt (freq)	670	-90
	130-RG402, 130-00001 Thru 133-00007 Captive	18	1.05+0.01	3	2	5,000	1500	375	0.03 x sqrt (freq)	1000	-90
	133-RG405, 133-00001 Thru 133-00011 Non-Captive	18	1.07+0.008	3	2	5,000	1000	250	0.03 x sqrt (freq)	670	-90
	130-RG402, 130-00001 Thru 130-00007 Non-Captive	18	1.05+0.008	3	2	5,000	1500	375	0.03 x sqrt (freq)	1000	-90
MIL-PRF-39012/80	133-RG405, 133-00001 Thru 133-00011	18	1.10+0.01	4	2	5,000	1000	250	0.05 x sqrt (freq)	670	-90
	130-RG402, 130-00001 Thru 130-00007	18	1.10+0.01	4	2	5,000	1500	375	0.05 x sqrt (freq)	1000	-90
MIL-PRF-39012/81, /82 & /83	133-RG405, 133-00001 Thru 133-00011 Captive	18	1.07+0.01	3	2	5,000	1000	250	0.03 x sqrt (freq)	670	-90
	130-RG402, 130-00001 Thru 133-00007 Captive	18	1.05+0.01	3	2	5,000	1500	375	0.03 x sqrt (freq)	1000	-90
	133-RG405, 133-00001 Thru 133-00011 Non-Captive	18	1.07+0.008	3	2	5,000	1000	250	0.03 x sqrt (freq)	670	-90
	130-RG402, 130-00001 Thru 130-00007 Non-Captive	18	1.05+0.008	3	2	5,000	1500	375	0.03 x sqrt (freq)	1000	-90
MIL-PRF-39012/92	—	18	1.035+0.005	N/A	2	5,000	N/A	250	0.03 x sqrt (freq)	670	-90
MIL-PRF-39012/93 & /94	—	18	N/A	3	2	5,000	1000	250	N/A	670	N/A

Catalog 1308940
Revised 9-14

www.te.com

Dimensions are shown for reference purposes only. Specifications subject to change.

Dimensions are in millimeters unless otherwise specified.

USA: +1 800 522 6752
Asia Pacific: +86 0 400 820 6015
UK: +44 800 267 666

For additional support numbers please visit www.te.com

SMA Connectors (MIL-PRF-39012) — Introduction (Continued)

Mechanical and Environmental Properties

MIL Type	Force to Engage (in-lbs)	Coupling Nut Retention (lbs.)	Coupling Proof Torque (in-lbs)	Cable Retention			Insertion	Withdrawal	Connector Durability	Recommended Mating Torque (in lbs.)
				Dia.	Lbs. Min.	In.-Ounces				
MIL-PRF-39012/55	2 max.	60	15 min.	0.036 [0.91] 0.067 [1.70] 0.110 [2.79] 0.122 [3.10]	10 20 30 40	N/A	N/A	N/A	500 cycles min.	7-10
MIL-PRF-39012/56	2 max.	60	15 min.	0.036 [0.91] 0.067 [1.70] 0.110 [2.79] 0.122 [3.10]	10 20 30 40	N/A	N/A	N/A	500 cycles min.	7-10
MIL-PRF-39012/57, /58 & /59	2 max.	N/A	N/A	0.036 [0.91] 0.067 [1.70] 0.110 [2.79] 0.122 [3.10]	10 20 30 40	N/A	2 lbs. max. w/ .0370 dia. pin	1 oz. min. w/ .0355 dia. pin	500 cycles min.	7-10
MIL-PRF-39012/60, & /61	2 max.	N/A	N/A	N/A	N/A	N/A	2 lbs. max. w/ .0370 dia. pin	1 oz. min. w/ .0355 dia. pin	500 cycles min.	7-10
MIL-PRF-39012/79	2 max.	60	15 min.	133-RG405, 133-00001 Thru 133-00011	30	16	N/A	N/A	500 cycles min.	7-10
				130-RG402, 130-00001 Thru 130-00007	60	55				
MIL-PRF-39012/80	2 max.	60	15 min.	133-RG405, 133-00001 Thru 133-00011	30	16	N/A	N/A	500 cycles min.	7-10
				130-RG402, 130-00001 Thru 130-00007	60	55				
MIL-PRF-39012/81, /82 & /83	2 max.	N/A	N/A	133-RG405, 133-00001 Thru 133-00011	30	16	2 lbs. max. w/ .0370 dia. pin	1 oz. min. w/ .0355 dia. pin	500 cycles min.	7-10
				130-RG402, 130-00001 Thru 130-00007	60	55				
MIL-PRF-39012/92	2 max.	60	15 min.	N/A	N/A	N/A	N/A	N/A	100 cycles min.	7-10
MIL-PRF-39012/93 & /94	2 max.	N/A	N/A	N/A	N/A	N/A	2 lbs. max. w/ .0370 dia. pin	1 oz. min. w/ .0355 dia. pin	500 cycles min.	7-10

Environmental

MIL Type	Vibration	Shock	Thermal Shock	Corrosion (Salt Spray)	Moisture Resistance
MIL-PRF-39012/55	MIL-STD-202 Method 204 Cond. D No Discontinuity	MIL-STD-202 Method 213 Cond. 1 No Discontinuity	MIL-STD-202 Method 107 Cond. B Except T_{HI} 85C	MIL-STD-202 Method 101 Cond. B	MIL-STD-202, Method 106 No Measurement @ High Humidity Insulation Resistance 200 Megaohms with 5 min. of removal from humidity
MIL-PRF-39012/56	MIL-STD-202 Method 204 Cond. D No Discontinuity	MIL-STD-202 Method 213 Cond. 1 No Discontinuity	MIL-STD-202 Method 107 Cond. B Except T_{HI} 85C	MIL-STD-202 Method 101 Cond. B	MIL-STD-202, Method 106 No Measurement @ High Humidity Insulation Resistance 200 Megaohms with 5 min. of removal from humidity
MIL-PRF-39012/57, /58 & /59	MIL-STD-202 Method 204 Cond. D No Discontinuity	MIL-STD-202 Method 213 Cond. 1 No Discontinuity	MIL-STD-202 Method 107 Cond. B Except T_{HI} 85C	MIL-STD-202 Method 101 Cond. B	MIL-STD-202, Method 106 No Measurement @ High Humidity Insulation Resistance 200 Megaohms with 5 min. of removal from humidity
MIL-PRF-39012/60, & /61	MIL-STD-1344 Method 2005 Cond. IV No Discontinuity	MIL-STD-1344 Method 2004 Cond. G No Discontinuity	MIL-STD-1344 Method 1003 Cond. A Except T_{HI} 200C	MIL-STD-1344 Method 1001 Cond. B	MIL-STD-1344, Method 1002, Type II No Measurement @ High Humidity Insulation Resistance 200 Megaohms with 5 min. of removal from humidity
MIL-PRF-39012/79	MIL-STD-202 Method 204 Cond. D No Discontinuity	MIL-STD-202 Method 213 Cond. 1 No Discontinuity	MIL-STD-202 Method 107 Cond. B Except T_{HI} 115C	MIL-STD-202 Method 101 Cond. B	MIL-STD-202, Method 106 No Measurement @ High Humidity Insulation Resistance 200 Megaohms with 5 min. of removal from humidity
MIL-PRF-39012/80	MIL-STD-202 Method 204 Cond. D No Discontinuity	MIL-STD-202 Method 213 Cond. 1 No Discontinuity	MIL-STD-202 Method 107 Cond. B Except T_{HI} 115C	MIL-STD-202 Method 101 Cond. B	MIL-STD-202, Method 106 No Measurement @ High Humidity Insulation Resistance 200 Megaohms with 5 min. of removal from humidity
MIL-PRF-39012/81, /82 & /83	MIL-STD-202 Method 204 Cond. D No Discontinuity	MIL-STD-202 Method 213 Cond. 1 No Discontinuity	MIL-STD-202 Method 107 Cond. B Except T_{HI} 115C	MIL-STD-202 Method 101 Cond. B	MIL-STD-202, Method 106 No Measurement @ High Humidity Insulation Resistance 200 Megaohms with 5 min. of removal from humidity
MIL-PRF-39012/92	MIL-STD-202 Method 204 Cond. D No Discontinuity	MIL-STD-202 Method 213 Cond. 1 No Discontinuity	MIL-STD-202 Method 107 Cond. B Except T_{HI} 115C	MIL-STD-202 Method 101 Cond. B	MIL-STD-202, Method 106 No Measurement @ High Humidity Insulation Resistance 200 Megaohms with 5 min. of removal from humidity
MIL-PRF-39012/93 & /94	MIL-STD-202 Method 204 Cond. D No Discontinuity	MIL-STD-202 Method 213 Cond. 1 No Discontinuity	MIL-STD-202 Method 107 Cond. B Except T_{HI} 125C	MIL-STD-202 Method 101 Cond. B	MIL-STD-202, Method 106 No Measurement @ High Humidity Insulation Resistance 200 Megaohms with 5 min. of removal from humidity

Catalog 1308940
Revised 9-14

www.te.com

Dimensions are shown for reference purposes only. Specifications subject to change.

Dimensions are in millimeters unless otherwise specified.

USA: +1 800 522 6752
Asia Pacific: +86 0 400 820 6015
UK: +44 800 267 666

For additional support numbers please visit www.te.com

SMA Connectors (MIL-PRF-39012) — For Flexible Cable

Straight Plugs

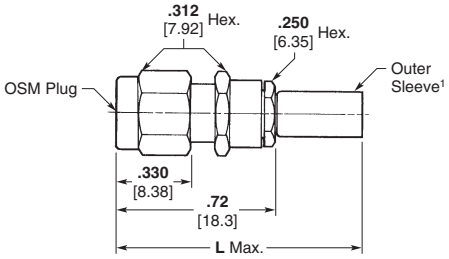

Outline 1

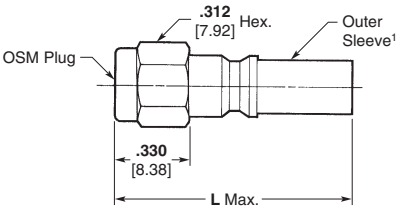

Outline 2

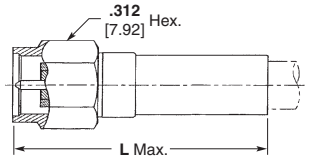

Outline 3

Military Part No. M39012/55	TE Part No.	Reference[3] Part No. (Ref. Only)	Outline	Cat.[1]	RG/U Cable	Dim. L	COTS Part No.	Reference[3] Part No. (Ref. Only)
-3006	1051757-1	2031-8006-92	1	A	178	**1.030** [26.16]	—	—
-3007	1051759-1	2031-8007-92	1	A	174, 316	**1.030** [26.16]	—	—
-3009	1051762-1	2031-8009-92	2	A	58, 142, 223	**1.030** [26.16]	—	—
B3011	1051764-1	2031-8011-92	1	B	178	**1.250** [31.75]	1051687-1 1051686-1	2031-5102-02 2031-5102-00
B3012	1051766-1	2031-8012-92	2	B	174, 316	**1.250** [31.75]	1051665-1 1051664-1	2031-5012-02 2031-5012-00
B3014	1051768-1	2031-8014-92	2	B	58	**1.250** [31.75]	1051678-1	2031-5055-00
B3015	1051769-1	2031-8015-92	2	B	142	**1.250** [31.75]	1051651-1 1051650-1	2031-5005-02 2031-5005-00
B3016	1051770-1	2031-8016-92	2	B	223	**1.250** [31.75]	1051651-1 1051650-1	2031-5005-02 2031-5005-00
B3019	1056413-1	2031-8019-92	1	B	174, 316	**1.375** [34.93]	1051665-1 1051664-1	2031-5012-02 2031-5012-00
B3019	225532-4[2]	—	3	B	174, 188, 188A, 316	**.950** [24.13]	221117-2	—
B3021	225532-1[2]	—	3	B	58, 58A, 58B, 58C	**1.030** [26.16]	—	—
—	—	—	2	B	142	**1.375** [34.93]	1051661-1 1051660-1	2031-5011-02 2031-5011-00
B3022	225532-3[2]	—	4	B	142, 142A, 142B, 400, Belden 84142	**1.030** [26.16]	221117-1	—
—	—	—	2	B	223	**1.375** [34.93]	1051661-1 1051660-1	2031-5011-02 2031-5011-00
B3023	1-225532-0[2]	—	4	B	223, 55, 55A, 55B	**1.030** [26.16]	—	—
B3024	225532-9[2]	—	4	B	141, 141A, 303	**1.030** [26.16]	—	—
-3025	1051780-1	2031-8025-92	1	C	178	**1.250** [31.75]	1051687-1 1051686-1	2031-5102-02 2031-5102-00
-3026	1051782-1	2031-8026-92	1	C	174, 316	**1.250** [31.75]	1051665-1 1051664-1	2031-5012-02 2031-5012-00

* No safety wire holes.
[1] Category A: solder sleeve; Categories B, C and D: crimp sleeve.
[2] Use Integral Die Crimp Tool Part Number 220061-1.
[3] -92 and -02 indicate passivated stainless steel finish. -00 indicates gold plated finish.
See page 2-4 for description of categories and pages 2-82 to 2-87 for tooling (unless noted otherwise).

Dimensions are shown for reference purposes only. Specifications subject to change.

Dimensions are in millimeters unless otherwise specified.

USA: +1 800 522 6752
Asia Pacific: +86 0 400 820 6015
UK: +44 800 267 666

For additional support numbers please visit www.te.com

SMA Connectors (MIL-PRF-39012) — For Flexible Cable (Continued)

Straight Plugs (Continued)

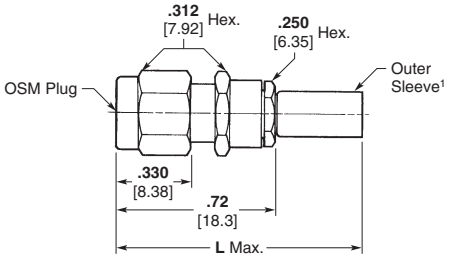

Outline 1

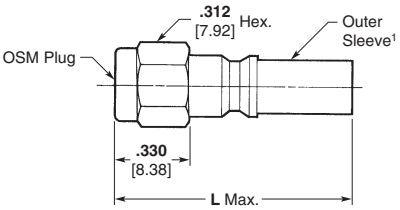

Outline 2

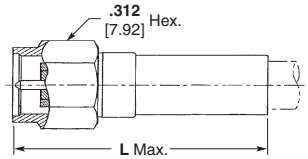

Outline 3

Military Part No. M39012/55	TE Part No.	Reference[3] Part No. (Ref. Only)	Outline	Cat.[1]	RG/U Cable	Dim. L	COTS Part No.	Reference[3] Part No. (Ref. Only)
-3028	1051785-1	2031-8028-92	2	C	142, 223	**1.250** [31.75]	1051661-1 1051660-1	2031-5011-02 2031-5011-00
-3029	1051787-1	2031-8029-92	2	C	58, 303	**1.250** [31.75]	—	—
*-3106	1051789-1	2031-8106-92	1	A	178	**1.030** [26.16]	—	—
*-3107	1051791-1	2031-8107-92	1	A	174, 316	**1.030** [26.16]	—	—
*-3109	1051794-1	2031-8109-92	2	A	58, 142, 223	**1.030** [26.16]	—	—
*B3112	1051797-1	2031-8112-92	2	B	174, 316	**1.250** [31.75]	1051665-1 1051664-1	2031-5012-02 2031-5012-00
*B3113	1051798-1	2031-8113-92	2	B	122	**1.250** [31.75]	—	—
*B3114	1051799-1	2031-8114-92	2	B	58	**1.250** [31.75]	1051678-1	2031-5055-00
*B3115	1051800-1	2031-8115-92	2	B	142	**1.250** [31.75]	1051651-1 1051650-1	2031-5005-02 2031-5005-00
*B3116	1051801-1	2031-8116-92	2	B	223	**1.250** [31.75]	1051651-1 1051650-1	2031-5005-02 2031-5005-00
*B3119	1051804-1	2031-8119-92	1	B	174, 316	**1.375** [34.93]	1051665-1 1051664-1	2031-5012-02 2031-5012-00
—	—	—	2	B	142	**1.375** [34.93]	1051661-1 1051660-1	2031-5011-02 2031-5011-00
—	—	—	2	B	223	**1.375** [34.93]	1051661-1 1051660-1	2031-5011-02 2031-5011-00
*-3125	1051810-1	2031-8125-92	1	C	178	**1.250** [31.75]	1051687-1 1051686-1	2031-5102-02 2031-5102-00
*-3126	1051812-1	2031-8126-92	1	C	174, 316	**1.250** [31.75]	1051665-1 1051664-1	2031-5012-02 2031-5012-00
*-3128	1051815-1	2031-8128-92	2	C	142, 223	**1.250** [31.75]	1051661-1 1051660-1	2031-5011-02 2031-5011-00
*-3129	1051816-1	2031-8129-92	2	C	58, 303	**1.250** [31.75]	—	—
-3502	1051788-1	2031-8052-92	2	D	142, 400	**1.250** [31.75]	1051661-1 1051660-1	2031-5011-02 2031-5011-00
*-3602	1051817-1	2031-8162-92	2	D	142, 400	**1.250** [31.75]	1051661-1 1051660-1	2031-5011-02 2031-5011-00

* No safety wire holes.
[1] Category A: solder sleeve; Categories B, C and D: crimp sleeve.
[2] Use Integral Die Crimp Tool Part Number 220061-1.
[3] -92 and -02 indicate passivated stainless steel finish. -00 indicates gold plated finish.
See page 2-4 for description of categories and pages 2-82 to 2-87 for tooling (unless noted otherwise).

Dimensions are shown for reference purposes only. Specifications subject to change.

Dimensions are in millimeters unless otherwise specified.

USA: +1 800 522 6752
Asia Pacific: +86 0 400 820 6015
UK: +44 800 267 666

For additional support numbers please visit www.te.com

SMA Connectors (MIL-PRF-39012) — For Flexible Cable (Continued)

Right Angle Plugs

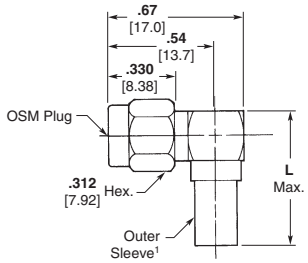

Outline 1

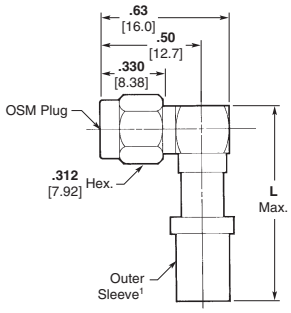

Outline 2

Military Part No. M39012/56	TE Part No.	Reference[2] Part No. (Ref. Only)	Outline	Cat.[1]	RG/U Cable	Dim. L	COTS Part No.	Reference[2] Part No. (Ref. Only)
-3006	1052149-1	2037-8006-92	1	A	178	**1.125** [28.58]	—	—
-3007	1052151-1	2037-8007-92	1	A	174, 316	**1.125** [28.58]	1052067-1 1052066-1	2037-5006-02 2037-5006-00
-3008	1052152-1	2037-8008-92	1	A	122	**1.125** [28.58]	—	—
-3009	1052154-1	2037-8009-92	1	A	58, 142, 223	**1.125** [28.58]	1052063-1 1052062-1	2037-5005-02 2037-5005-00
-3010	1052155-1	2037-8010-92	1	A	303	**1.125** [28.58]	1052063-1 1052062-1	2037-5005-02 2037-5005-00
B3011	1052156-1	2037-8011-92	1	B	178	**1.250** [31.75]	1052098-1 1052097-1	2037-5100-02 2037-5100-00
B3012	1052157-1	2037-8012-92	1	B	174, 316	**1.250** [31.75]	1052076-1 1052075-1	2037-5008-02 2037-5008-00
B3013	1052158-1	2037-8013-92	1	B	122	**1.250** [31.75]	—	—
B3014	1052159-1	2037-8014-92	1	B	58	**1.250** [31.75]	1052092-1	2037-5056-00
B3015	1052160-1	2037-8015-92	1	B	142	**1.250** [31.75]	1052072-1 1052071-1	2037-5007-02 2037-5007-00
B3016	1052161-1	2037-8016-92	1	B	223	**1.250** [31.75]	1052072-1 1052071-1	2037-5007-02 2037-5007-00
B3017	1052162-1	2037-8017-92	1	B	303	**1.250** [31.75]	1052092-1	2037-5056-00
B3018	1052163-1	2037-8018-92	1	B	178	**1.375** [34.93]	1052098-1 1052097-1	2037-5100-02 2037-5100-00
B3019	1052165-1	2037-8019-92	1	B	174, 316	**1.375** [34.93]	1052076-1 1052075-1	2037-5008-02 2037-5008-00
B3020	1052166-1	2037-8020-92	1	B	122	**1.375** [34.93]	—	—
B3021	1052167-1	2037-8021-92	1	B	58	**1.375** [34.93]	1052092-1	2037-5056-00
B3022	1052168-1	2037-8022-92	1	B	142	**1.375** [34.93]	1052072-1 1052071-1	2037-5007-02 2037-5007-00
B3023	1052169-1	2037-8023-92	1	B	223	**1.375** [34.93]	1052072-1 1052071-1	2037-5007-02 2037-5007-00
B3024	1052170-1	2037-8024-92	1	B	303	**1.375** [34.93]	1052092-1	2037-5056-00
-3025	1052171-1	2037-8025-92	1	C	178	**1.375** [34.93]	1052098-1 1052097-1	2037-5100-02 2037-5100-00
-3026	1052173-1	2037-8026-92	1	C	174, 316	**1.375** [34.93]	1052076-1 1052075-1	2037-5008-02 2037-5008-00
-3027	1052174-1	2037-8027-92	1	C	122	**1.375** [34.93]	—	—
-3028	1052176-1	2037-8028-92	1	C	142, 223	**1.375** [34.93]	1052072-1 1052071-1	2037-5007-02 2037-5007-00

* No safety wire holes.
[1] Category A: solder sleeve; Categories B, C and D: crimp sleeve.
[2] -92 and -02 indicate passivated stainless steel finish. -00 indicates gold plated finish.
See page 2-4 for description of categories and pages 2-82 to 2-87 for tooling (unless noted otherwise).

Dimensions are shown for reference purposes only. Specifications subject to change.

Dimensions are in millimeters unless otherwise specified.

USA: +1 800 522 6752
Asia Pacific: +86 0 400 820 6015
UK: +44 800 267 666

For additional support numbers please visit www.te.com

SMA Connectors (MIL-PRF-39012) — For Flexible Cable (Continued)

Right Angle Plugs (Continued)

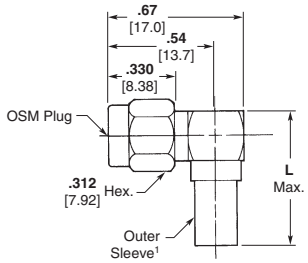

Outline 1

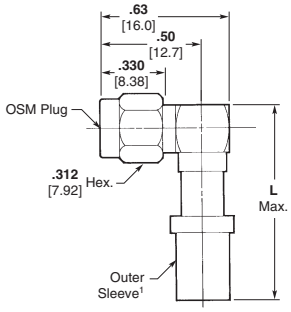

Outline 2

Military Part No. M39012/56	TE Part No.	Reference[2] Part No. (Ref. Only)	Outline	Cat.[1]	RG/U Cable	Dim. L	COTS Part No.	Reference[2] Part No. (Ref. Only)
-3029	1052177-1	2037-8029-92	1	C	58, 303	**1.375** [34.93]	1052092-1	2037-5056-00
*-3106	1052179-1	2037-8106-92	1	A	178	**1.125** [28.58]	—	—
*-3107	1052181-1	2037-8107-92	1	A	174, 316	**1.125** [28.58]	1052067-1 1052066-1	2037-5006-02 2037-5006-00
*-3108	1052182-1	2037-8108-92	1	A	122	**1.125** [28.58]	—	—
*-3109	1052184-1	2037-8109-92	1	A	58, 142, 223	**1.125** [28.58]	1052063-1 1052062-1	2037-5005-02 2037-5005-00
*-3110	1052185-1	2037-8110-92	1	A	303	**1.125** [28.58]	1052063-1 1052062-1	2037-5005-02 2037-5005-00
*B3111	1052186-1	2037-8111-92	1	B	178	**1.250** [31.75]	1052098-1 1052097-1	2037-5100-02 2037-5100-00
*B3112	1052187-1	2037-8112-92	1	B	174, 316	**1.250** [31.75]	1052076-1 1052075-1	2037-5008-02 2037-5008-00
*B3113	1052188-1	2037-8113-92	1	B	122	**1.250** [31.75]	—	—
*B3114	1052189-1	2037-8114-92	1	B	58	**1.250** [31.75]	1052092-1	2037-5056-00
*B3115	1052190-1	2037-8115-92	1	B	142	**1.250** [31.75]	1052072-1 1052071-1	2037-5007-02 2037-5007-00
*B3116	1052191-1	2037-8116-92	1	B	223	**1.250** [31.75]	1052072-1 1052071-1	2037-5007-02 2037-5007-00
*B3117	1052192-1	2037-8117-92	1	B	303	**1.250** [31.75]	1052092-1	2037-5056-00
*B3118	1052193-1	2037-8118-92	1	B	178	**1.375** [34.93]	1052098-1 1052097-1	2037-5100-02 2037-5100-00
*B3119	1052194-1	2037-8119-92	1	B	174, 316	**1.375** [34.93]	1052076-1 1052075-1	2037-5008-02 2037-5008-00
*B3120	1052195-1	2037-8120-92	1	B	122	**1.375** [34.93]	—	—
*B3121	1052196-1	2037-8121-92	1	B	58	**1.375** [34.93]	1052092-1	2037-5056-00
*B3122	1052197-1	2037-8122-92	1	B	142	**1.375** [34.93]	1052072-1 1052071-1	2037-5007-02 2037-5007-00
*B3123	1052198-1	2037-8123-92	1	B	223	**1.375** [34.93]	1052072-1 1052071-1	2037-5007-02 2037-5007-00
*B3124	1052199-1	2037-8124-92	1	B	303	**1.375** [34.93]	1052092-1	2037-5056-00
*-3125	1052201-1	2037-8125-92	1	C	178	**1.375** [34.93]	1052098-1 1052097-1	2037-5100-02 2037-5100-00
*-3126	1052203-1	2037-8126-92	1	C	174, 316	**1.375** [34.93]	1052076-1 1052075-1	2037-5008-02 2037-5008-00
*-3127	1052204-1	2037-8127-92	1	C	122	**1.375** [34.93]	—	—
*-3128	1052206-1	2037-8128-92	1	C	142, 223	**1.375** [34.93]	1052072-1 1052071-1	2037-5007-02 2037-5007-00
*-3129	1052207-1	2037-8129-92	1	C	58, 303	**1.375** [34.93]	1052092-1	2037-5056-00
-3502	1052178-1	2037-8052-92	2	D	142, 400	**1.375** [34.93]	1052072-1 1052071-1	2037-5007-02 2037-5007-00
*-3602	1086723-1	2037-8162-92	2	D	142, 400	**1.375** [34.93]	1052072-1 1052071-1	2037-5007-02 2037-5007-00

* No safety wire holes.
[1] Category A: solder sleeve; Categories B, C and D: crimp sleeve.
[2] -92 and -02 indicate passivated stainless steel finish. -00 indicates gold plated finish.
See page 2-4 for description of categories and pages 2-82 to 2-87 for tooling (unless noted otherwise).

Dimensions are shown for reference purposes only. Specifications subject to change.

Dimensions are in millimeters unless otherwise specified.

USA: +1 800 522 6752
Asia Pacific: +86 0 400 820 6015
UK: +44 800 267 666

For additional support numbers please visit www.te.com

SMA Connectors (MIL-PRF-39012) — For Flexible Cable (Continued)

Straight Jacks

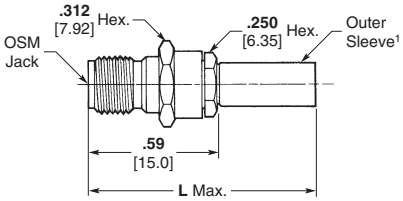

Outline 1

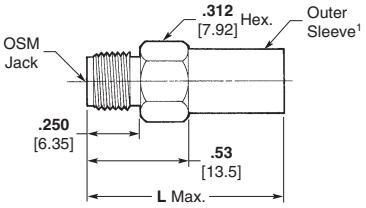

Outline 2

Military Part No. M39012/57	TE Part No.	Reference[2] Part No. (Ref. Only)	Outline	Cat.[1]	RG/U Cable	Dim. L	COTS Part No.	Reference[2] Part No. (Ref. Only)
B3011	1051904-1	2032-8011-92	1	B	178	**1.265** [32.13]	1051869-1 1051868-1	2032-5026-02 2032-5026-00
B3012	1051905-1	2032-8012-92	1	B	174, 316	**1.265** [32.13]	1051855-1	2032-5003-02
B3013	1051906-1	2032-8013-92	2	B	122	**1.265** [32.13]	—	—
B3014	1051907-1	2032-8014-92	2	B	58	**1.265** [32.13]	1051866-1	2032-5021-00
B3015	1051908-1	2032-8015-92	2	B	142	**1.265** [32.13]	1051861-1	2032-5007-00
B3016	1051909-1	2032-8016-92	2	B	223	**1.265** [32.13]	1051861-1	2032-5007-00
B3017	1051910-1	2032-8017-92	2	B	303	**1.265** [32.13]	1051866-1	2032-5021-00
B3018	1051911-1	2032-8018-92	1	B	178	**1.265** [32.13]	1 -1 1051868-1	2032-5026-02 2032-5026-00
B3019	1051912-1	2032-8019-92	1	B	174, 316	**1.265** [32.13]	1051855-1	2032-5003-02
B3020	1051913-1	2032-8020-92	2	B	122	**1.265** [32.13]	—	—
B3021	1051914-1	2032-8021-92	2	B	58	**1.265** [32.13]	1051866-1	2032-5021-00
B3022	1051915-1	2032-8022-92	2	B	142	**1.265** [32.13]	1051861-1	2032-5007-00
B3023	1051916-1	2032-8023-92	2	B	223	**1.265** [32.13]	1051861-1	2032-5007-00
B3024	1051917-1	2032-8024-92	2	B	303	**1.265** [32.13]	1051866-1	2032-5021-00
-3025	1051918-1	2032-8025-92	1	C	178	**1.265** [32.13]	1051869-1 1051868-1	2032-5026-02 2032-5026-00
-3026	1051919-1	2032-8026-92	1	C	174, 316	**1.265** [32.13]	1051855-1	2032-5003-02
-3027	1051920-1	2032-8027-92	2	C	122	**1.265** [32.13]	—	—
-3028	1051921-1	2032-8028-92	2	C	142, 223	**1.265** [32.13]	1051861-1	2032-5007-00
-3029	1051922-1	2032-8029-92	2	C	58, 303	**1.265** [32.13]	1051866-1	2032-5021-00
-3502	1051923-1	2032-8052-92	2	D	142, 400	**1.265** [32.13]	1051861-1	2032-5007-00

[1] Category A: solder sleeve; Categories B, C and D: crimp sleeve.
[2] -92 and -02 indicate passivated stainless steel finish. -00 indicates gold plated finish.
See page 2-4 for description of categories and pages 2-82 to 2-87 for tooling (unless noted otherwise).

Dimensions are shown for reference purposes only. Specifications subject to change.

Dimensions are in millimeters unless otherwise specified.

USA: +1 800 522 6752
Asia Pacific: +86 0 400 820 6015
UK: +44 800 267 666

For additional support numbers please visit www.te.com

SMA Connectors (MIL-PRF-39012) — For Flexible Cable (Continued)

Panel Mount Jacks

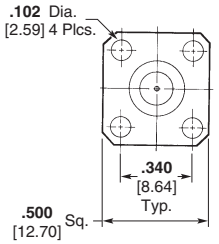

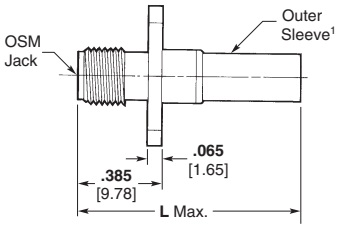

Outline 1

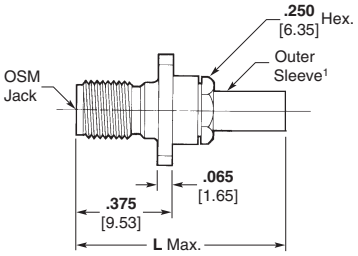

Outline 2

Military Part No. M39012/58	TE Part No.	Reference[2] Part No. (Ref. Only)	Outline	Cat.[1]	RG/U Cable	Dim. L	COTS Part No.	Reference[2] Part No. (Ref. Only)
B3011	1052042-1	2036-8011-92	2	B	178	**1.265** [32.13]	1052024-1	2036-5004-02
B3012	1254028-1	2036-8012-92	2	B	174, 316	**1.265** [32.13]	1052024-1	2036-5004-02
B3013	1484499-1	2036-8013-92	1	B	122	**1.265** [32.13]	—	—
B3014	1484500-1	2036-8014-92	1	B	58	**1.265** [32.13]	—	—
B3015	1052043-1	2036-8015-92	1	B	142	**1.265** [32.13]	—	—
B3016	1484501-1	2036-8016-92	1	B	223	**1.265** [32.13]	—	—
B3017	1484502-1	2036-8017-92	1	B	303	**1.265** [32.13]	1087843-1	2036-5014-02
B3018	1052044-1	2036-8018-92	2	B	178	**1.265** [32.13]	1052030-1	2036-5016-00
B3019	1484503-1	2036-8019-92	2	B	174, 316	**1.265** [32.13]	1052024-1	2036-5004-02
B3020	1484504-1	2036-8020-92	1	B	122	**1.265** [32.13]	—	—
B3021	1484505-1	2036-8021-92	1	B	58	**1.265** [32.13]	1087843-1	2036-5014-02
B3022	1052045-1	2036-8022-92	1	B	142	**1.265** [32.13]	—	—
B3023	1484506-1	2036-8023-92	1	B	223	**1.265** [32.13]	—	—
B3024	1484507-1	2036-8024-92	1	B	303	**1.265** [32.13]	1087843-1	2036-5014-02
-3025	1052046-1	2036-8025-92	2	C	178	**1.125** [28.58]	1052030-1	2036-5016-00
-3026	1052047-1	2036-8026-92	2	C	174, 316	**1.125** [28.58]	1052024-1	2036-5004-02
-3027	1052048-1	2036-8027-92	1	C	122	**1.125** [28.58]	—	—
-3028	1052049-1	2036-8028-92	1	C	142, 223	**1.125** [28.58]	—	—
-3029	1052050-1	2036-8029-92	1	C	58, 303	**1.125** [28.58]	—	—
-3502	1052051-1	2036-8052-92	1	D	142, 400	**1.125** [28.58]	—	—

[1] Category A: solder sleeve; Categories B, C and D: crimp sleeve.
[2] -92 and -02 indicate passivated stainless steel finish. -00 indicates gold plated finish.
See page 2-4 for description of categories and pages 2-82 to 2-87 for tooling (unless noted otherwise).

Dimensions are shown for reference purposes only. Specifications subject to change.

Dimensions are in millimeters unless otherwise specified.

USA: +1 800 522 6752
Asia Pacific: +86 0 400 820 6015
UK: +44 800 267 666

For additional support numbers please visit www.te.com

SMA Connectors (MIL-PRF-39012) — For Flexible Cable (Continued)

Bulkhead Jacks

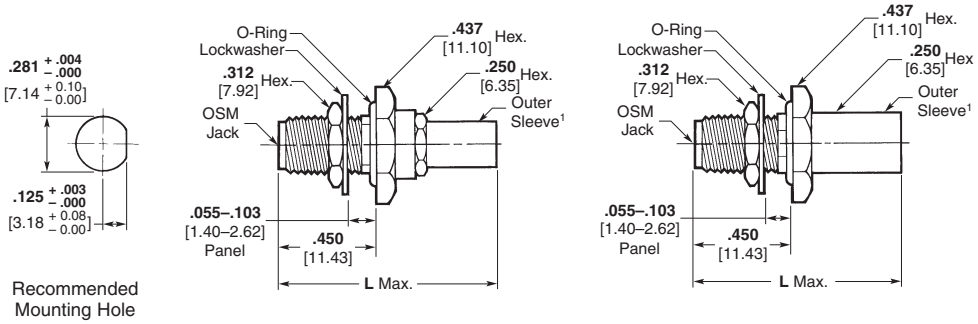

Military Part No. M39012/59	TE Part No.	Reference[2] Part No. (Ref. Only)	Outline	Cat.[1]	RG/U Cable	Dim. L	COTS Part No.	Reference[2] Part No. (Ref. Only)
B3011	1362216-1	2034-8011-92	1	B	178	**1.265** [32.13]	1051951-1 1051950-1	2034-5031-02 2034-5031-00
B3012	1051986-1	2034-8012-92	1	B	174, 316	**1.265** [32.13]	1051933-1	2034-5005-00
B3013	1083993-1	2034-8013-92	2	B	122	**1.265** [32.13]	—	—
B3014	1331293-1	2034-8014-92	2	B	58	**1.265** [32.13]	—	—
B3015	1253627-1	2034-8015-92	2	B	142	**1.265** [32.13]	—	—
B3016	1221165-1	2034-8016-92	2	B	223	**1.265** [32.13]	—	—
B3017	1484542-1	2034-8017-92	2	B	303	**1.265** [32.13]	—	—
B3018	1051987-1	2034-8018-92	1	B	178	**1.265** [32.13]	1051951-1 1051950-1	2034-5031-02 2034-5031-00
B3019	1051988-1	2034-8019-92	1	B	174, 316	**1.265** [32.13]	1051933-1	2034-5005-00
B3020	1484543-1	2034-8020-92	2	B	122	**1.265** [32.13]	—	—
B3021	1087842-1	2034-8021-92	2	B	58	**1.265** [32.13]	—	—
B3022	1051989-1	2034-8022-92	2	B	142	**1.265** [32.13]	—	—
B3023	1051990-1	2034-8023-92	2	B	223	**1.265** [32.13]	—	—
B3024	1051991-1	2034-8024-92	2	B	303	**1.265** [32.13]	—	—
-3025	1051992-1	2034-8025-92	1	C	178	**1.125** [28.58]	1051951-1 1051950-1	2034-5031-02 2034-5031-00
-3026	1051994-1	2034-8026-92	1	C	174, 316	**1.125** [28.58]	1051933-1	2034-5005-00
-3027	1051995-1	2034-8027-92	2	C	122	**1.125** [28.58]	—	—
-3028	1051996-1	2034-8028-92	2	C	142, 223	**1.125** [28.58]	—	—
-3029	1051997-1	2034-8029-92	2	C	58, 303	**1.125** [28.58]	—	—
-3502	1051998-1	2034-8052-92	2	D	142, 400	**1.265** [32.13]	—	—

[1] Category A: solder sleeve; Categories B, C and D: crimp sleeve.
[2] -92 and -02 indicate passivated stainless steel finish. -00 indicates gold plated finish.
See page 2-4 for description of categories and pages 2-82 to 2-87 for tooling (unless noted otherwise).

Dimensions are shown for reference purposes only. Specifications subject to change.

Dimensions are in millimeters unless otherwise specified.

USA: +1 800 522 6752
Asia Pacific: +86 0 400 820 6015
UK: +44 800 267 666

For additional support numbers please visit www.te.com

SMA Connectors (MIL-PRF-39012) — Panel Mount

Panel Mount Receptacles

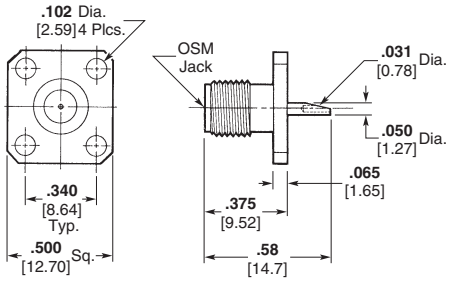

Outline 1

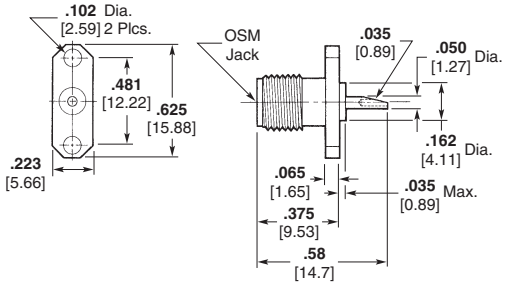

Outline 2

Military Part No. M39012/60	TE Part No.	Reference[1] Part No. (Ref. Only)	Outline	COTS Part No.	Reference[1] Part No. (Ref. Only)
-3001	1052924-1	2052-8001-92	1	1052422-1 1052421-1	2052-0000-02 2052-0000-00
-3002	1052926-1	2052-8002-92	2	1052534-1 1052533-1	2052-1300-02 2052-1300-00

[1] -92 and -02 indicate passivated stainless steel finish. -00 indicates gold plated finish.

Bulkhead Mount Receptacles

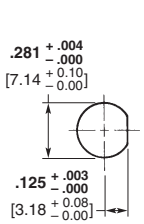

Typical Recommended Mounting Hole

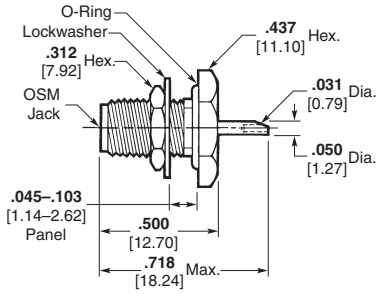

Outline 3

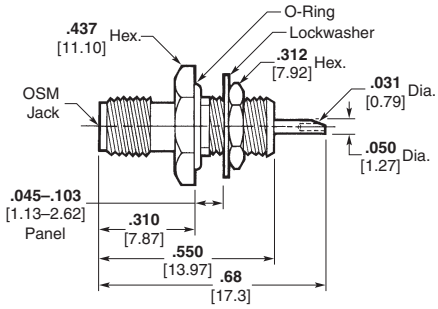

Outline 4

Military Part No. M39012/61	TE Part No.	Reference[1] Part No. (Ref. Only)	Outline	COTS Part No.	Reference[1] Part No. (Ref. Only)
-3001	1053118-1	2056-8011-92	3	—	—
-3002	1484516-1	2058-8012-92	4	1053133-1	2058-0000-00

[1] -92 and -02 indicate passivated stainless steel finish. -00 indicates gold plated finish.

Dimensions are shown for reference purposes only. Specifications subject to change.

Dimensions are in millimeters unless otherwise specified.

USA: +1 800 522 6752
Asia Pacific: +86 0 400 820 6015
UK: +44 800 267 666

For additional support numbers please visit www.te.com

SMA Connectors (MIL-PRF-39012) — For Semi-Rigid Cable

Straight Plugs

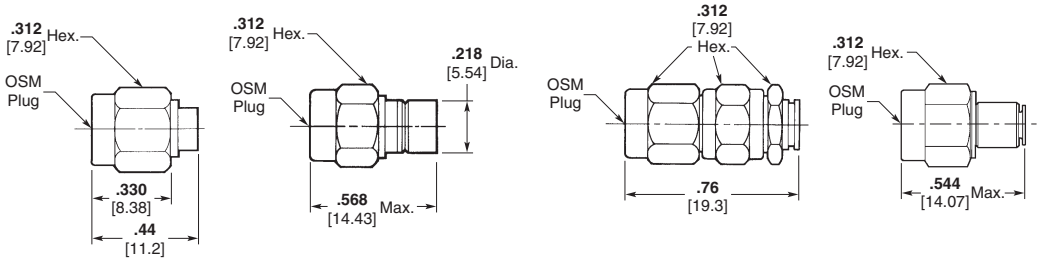

Outline 1 Outline 2 Outline 3 Outline 4

Military Part No. M39012/79	TE Part No.	Reference[4] Part No. (Ref. Only)	Outline	Category	RG/U Cable	COTS Part No.	Reference[4] Part No. (Ref. Only)
B3001	1050774-1	2001-8001-92	1	B	405	1050548-1 1050547-1	2001-5032-02 2001-5032-00
B3002	1050776-1	2001-8002-92	1	B	402	1050525-1 1050524-1	2001-5003-02 2001-5003-00
B3003	1050777-1	2001-8003-92	3	B	405	—	—
B3003	1050813-1	2001-8991-92	2[1]	B	405	1050598-1	2001-5385-02
B3003	1089686-1[2]	2001-8203-92	2	B	405	—	—
B3004	1050779-1	2001-8004-92	3	B	402	—	—
B3004	1050792-1[2]	2001-8204-92	2	B	402	—	—
-3007	1050781-1	2001-8007-92	3	E	405	—	—
-3008	1050783-1	2001-8008-92	3	E	402	—	—
*B3101	1050785-1	2001-8101-92	1	B	405	1050548-1 1050547-1	2001-5032-02 2001-5032-00
*B3102	1050786-1	2001-8102-92	1	B	402	1050525-1 1050524-1	2001-5003-02 2001-5003-00
*B3103	1050787-1	2001-8103-92	3	B	405	—	—
*B3103	1050797-1[2]	2001-8303-92	2	B	405	1050744-1	2001-7685-02
*B3103	1050812-1	2001-8981-92	2[1]	B	405	1050598-1	2001-5385-02
*B3103	227868-1[3]	—	4	B	405	—	—
*B3104	1050788-1	2001-8104-92	3	B	402	—	—
*B3104	1050799-1	2001-8304-92	2	B	402	—	—
*B3104	227743-1[3]	—	4	B	402	—	—
*-3107	1050789-1	2001-8107-92	3	E	405	—	—
*-3108	1050790-1	2001-8108-92	3	E	402	—	—
-3207	228639-3[3]	—	4	F	405	—	—
*-3307	228639-1[3]	—	4	F	405	—	—
*-3308	228634-1[3]	—	4	F	402	—	—
AF8627286-2	221447-1	—	4	—	405	—	—

* No safety wire holes.
[1] Low profile version; overall length .393 [9.98] max.
[2] OSCC solderless compression crimp version.
[3] Use Hand Tool Kit Part Number 59981-1 which includes Die Set Part Number 312253-2 and Locator Part Number 220221-2.
[4] -92 and -02 indicate passivated stainless steel finish. -00 indicates gold plated finish.
See page 2-4 for description of categories and pages 2-82 to 2-87 for tooling (unless noted otherwise).

DSCC Part Number	TE Part No.	Reference[1] Part No. Part No.	Outline	RG/U Cable	COTS Part No.	Reference[1] Part No. Part No.
84149SSG	1050605-1	2001-5397-02	1	402	—	—
84149SSG-1	1050629-1	2001-5557-02	1	402	1050525-1 1050524-1	2001-5003-02 2001-5003-00
84149SSGA	1050609-1	2001-5431-02	1	405	—	—
84149SSGA-1	1050631-1	2001-5558-02	1	405	1050770-1 1050769-1	2001-7985-02 2001-7985-00

[1] -02 indicates passivated stainless steel finish. -00 indicates gold plated finish.

SMA Connectors (MIL-PRF-39012) — For Semi-Rigid Cable (Continued)

Right Angle Plugs

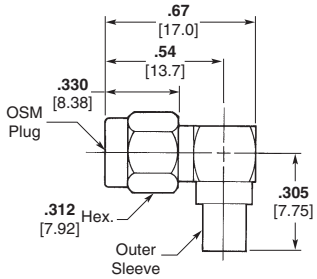

Outline 1

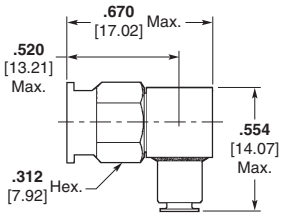

Outline 2

Military Part No. M39012/80	TE Part No.	Reference[2] Part No. (Ref. Only)	Outline	Category	RG/U Cable	COTS Part No.	Reference[2] Part No. (Ref. Only)
B3003	1051163-1	2007-8003-92	1	B	405	—	—
B3004	1051164-1	2007-8004-92	1	B	402	—	—
-3005	1051165-1	2007-8005-92	1	E	405	1051114-1 1051113-1	2007-5055-02 2007-5055-00
-3006	1051166-1	2007-8006-92	1	E	402	1051110-1 1051109-1	2007-5054-02 2007-5054-00
-3007	1051168-1	2007-8007-92	1	E	405	1051114-1 1051113-1	2007-5055-02 2007-5055-00
-3008	1051170-1	2007-8008-92	1	E	402	1051110-1 1051109-1	2007-5054-02 2007-5054-00
*B3103	1051173-1	2007-8103-92	1	B	405	1051114-1 1051113-1	2007-5055-02 2007-5055-00
*B3104	1051174-1	2007-8104-92	1	B	402	1051110-1 1051109-1	2007-5054-02 2007-5054-00
*-3105	1051175-1	2007-8105-92	1	E	405	1051114-1 1051113-1	2007-5055-02 2007-5055-00
*-3106	1051176-1	2007-8106-92	1	E	402	1051110-1 1051109-1	2007-5054-02 2007-5054-00
*-3107	1051177-1	2007-8107-92	1	E	405	1051114-1 1051113-1	2007-5055-02 2007-5055-00
*-3108	1051178-1	2007-8108-92	1	E	402	1051110-1 1051109-1	2007-5054-02 2007-5054-00
-3207	228583-3	—	2	F	405	—	—
*-3307	228583-1	—	2	F	405	—	—
-3308	228626-1	—	2	F	402	—	—

* No safety wire holes.
[1] Use Hand Tool Kit Part Number 59981-1 which includes Die Set Part Number 312253-1 and Locator Part Number 312173-1
[2] -92 and -02 indicate passivated stainless steel finish. -00 indicates gold plated finish.
See page 2-4 for description of categories and pages 2-82 to 2-87 for tooling (unless noted otherwise).

DSCC Part Number	TE Part No.	Reference[1] Part No. Part No.	Outline	RG/U Cable	COTS Part No.	Reference[1] Part No. Part No.
85037SSG	1051119-1	2007-5115-02	1	402	1051110-1 1051109-1	2007-5054-02 2007-5054-00
85037SSGA	1051120-1	2007-5116-02	1	405	1051114-1 1051113-1	2007-5055-02 2007-5055-00

[1] -02 indicates passivated stainless steel finish. -00 indicates gold plated finish.

SMA Connectors (MIL-PRF-39012) — For Semi-Rigid Cable (Continued)

Straight Jacks

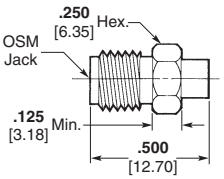

Outline 1

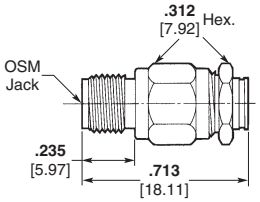

Outline 2

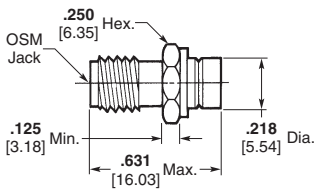

Outline 3

Military Part No. M39012/81	TE Part No.	Reference[2] Part No. (Ref. Only)	Outline	Category	RG/U Cable	COTS Part No.	Reference[2] Part No. (Ref. Only)
B3001	1050923-1	2002-8001-90	1	B	405	1050859-1	2002-5016-00
B3002	1050924-1	2002-8002-90	1	B	402	1050854-1	2002-5015-00
-3005	1050926-1	2002-8005-90	1	E	405	1050859-1	2002-5016-00
-3006	1050928-1	2002-8006-90	1	E	402	1050854-1	2002-5015-00
-3007	1050929-1	2002-8007-92	2	E	405	—	—
-3008	1050931-1	2002-8008-92	2	E	402	—	—
-3207	1050934-1[1]	2002-8207-92	3	F	405	—	—
-3208	1050935-1[1]	2002-8208-92	3	F	402	—	—

[1] OSCC solderless compression crimp version.
[2] -92 indicates passivated stainless steel finish. -90 and -00 indicate gold plated finish.
See page 2-4 for description of categories and pages 2-82 to 2-87 for tooling.

Panel Mount Jacks

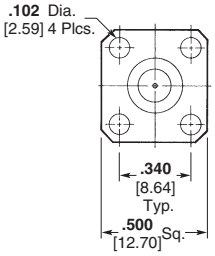

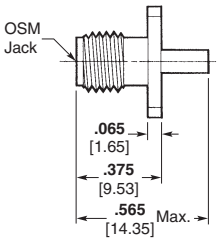

Outline 4

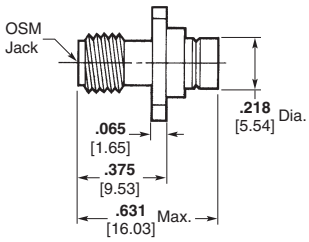

Outline 5

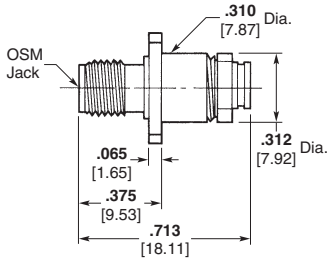

Outline 6

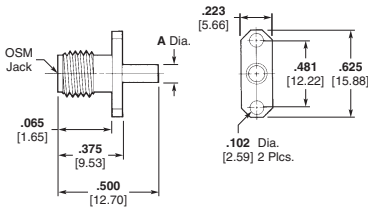

Outline 7

Military Part No. M39012/82	TE Part No.	Reference[2] Part No. (Ref. Only)	Outline	Category	RG/U Cable	COTS Part No.	Reference[2] Part No. (Ref. Only)
B3001	1051087-1	2006-8001-90	4	B	405	1051049-1	2006-5012-00
B3002	1051088-1	2006-8002-90	4	B	402	1051081-1	2006-7941-00
-3005	1051091-1	2006-8005-90	4	E	405	1051049-1	2006-5012-00
-3006	1051092-1	2006-8006-90	4	E	402	1051081-1	2006-7941-00
-3007	1051093-1	2006-8007-92	6	E	405	—	—
-3008	1051094-1	2006-8008-92	6	E	402	—	—
-3207	1051097-1[1]	2006-8207-92	5	F	405	—	—
-3208	1051098-1[1]	2006-8208-92	5	F	402	—	—

[1] OSCC solderless compression crimp version.
[2] -92 indicates passivated stainless steel finish. -90 and -00 indicate gold plated finish.
See page 2-4 for description of categories and pages 2-82 to 2-87 for tooling.

DSCC Part Number	TE Part No.	Reference[1] Part No. Part No.	Outline	RG/U Cable	COTS Part No.	Reference[1] Part No. Part No.
85022SSG	1051063-1	2006-5151-00	7	402	—	—
85022SSG-1	1221162-1	2006-5192-00	7	402	1051052-1	2006-5013-00
85022SSGA	1051062-1	2006-5150-00	7	405	—	—
85022SSGA-1	1051067-1	2006-5193-00	7	405	1051046-1	2006-5010-00

[1] -02 indicates passivated stainless steel finish. -00 indicates gold plated finish.

Dimensions are shown for reference purposes only. Specifications subject to change.

Dimensions are in millimeters unless otherwise specified.

USA: +1 800 522 6752
Asia Pacific: +86 0 400 820 6015
UK: +44 800 267 666

For additional support numbers please visit www.te.com

SMA Connectors (MIL-PRF-39012) — For Semi-Rigid Cable (Continued)

Bulkhead Mount Jacks

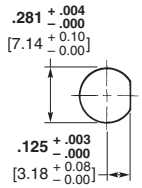

Recommended Mounting Hole

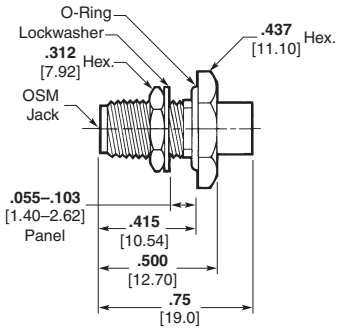

Outline 1

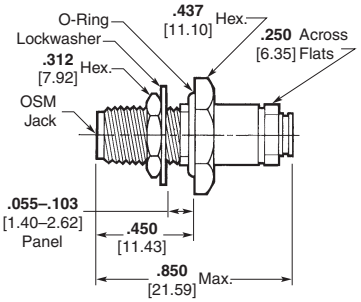

Outline 2

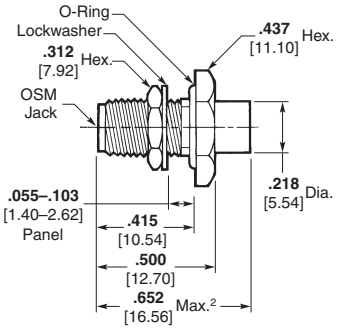

Outline 3

Military Part No. M39012/83	TE Part No.	Reference[3] Part No. (Ref. Only)	Outline	Category	RG/U Cable	COTS Part No.	Reference[3] Part No. (Ref. Only)
B3001	1051022-1	2004-8001-90	1	B	405	1051018-1	2004-7985-00
B3002	1051023-1	2004-8002-90	1	B	402	1051013-1	2004-7941-00
-3005	1051026-1	2004-8005-90	1	E	405	1051018-1	2004-7985-00
-3006	1051027-1	2004-8006-90	1	E	402	1051013-1	2004-7941-00
-3007	1051028-1	2004-8007-92	2	E	405	—	—
-3008	1051029-1	2004-8008-92	2	E	402	—	—
-3207	1051032-1[1, 2]	2004-8207-92	3	F	405	—	—
-3208	1051033-1[1, 2]	2004-8208-92	3	F	402	1051005-1	2004-7641-02

[1] OSCC Solderless Compression Crimp version.
[2] Category F Only: Overall Length; .620 [15.75] Max.
[3] -92 and -02 indicate passivated stainless steel finish. -90 and -00 indicate gold plated finish.
See page 2-4 for description of categories and pages 2-82 to 2-87 for tooling.

Straight Plugs, without Contact

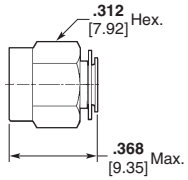

Outline 4

Military Part No. M39012/92	TE Part No.	Reference Part No. (Ref. Only)	Outline	Category	RG/U Cable
B3101	227531-1[2]	—	4	B	402
-3301	228635-1	—	4	F	402

[2] Use Hand Tool Kit Part Number 59981-1 which includes Die Set Part Number 312253-1 and Locator Part Number 220220-2.
See page 2-4 for description of categories and pages 2-82 to 2-87 for tooling.

Dimensions are shown for reference purposes only. Specifications subject to change.

Dimensions are in millimeters unless otherwise specified.

USA: +1 800 522 6752
Asia Pacific: +86 0 400 820 6015
UK: +44 800 267 666

For additional support numbers please visit www.te.com

SMA Connectors (MIL-PRF-39012) — Printed Circuit Board Mount

Vertical PCB Jacks

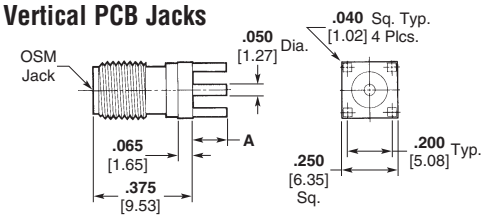

Outline 1

Military Part No. M39012/93	TE Part No.	Reference[1] Part No. (Ref. Only)	Outline	Dimension A	COTS Part No.	Reference[1] Part No. (Ref. Only)
-3001	1053372-1	2062-8001-90	1	.155 3.94	1053354-1	2062-0000-00
-3002	1053374-1	2062-8002-90	1	.125 3.18	—	—
-3003	1053376-1	2062-8003-90	1	.093 2.36	—	—

Right Angle PCB Jacks

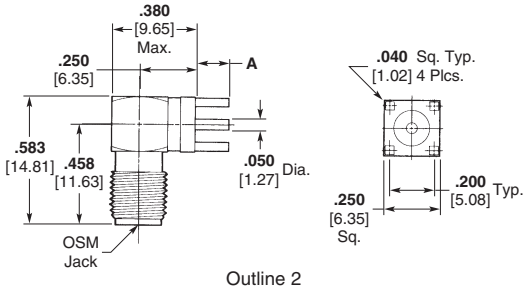

Outline 2

Military Part No. M39012/94	TE Part No.	Reference[1] Part No. (Ref. Only)	Outline	Dimension A	COTS Part No.	Reference[1] Part No. (Ref. Only)
-3001	1053396-1	2064-8001-90	2	.155 3.94	1053378-1	2064-0000-00
-3002	1053398-1	2064-8002-90	2	.125 3.18	—	—
-3003	1053400-1	2064-8003-90	2	.093 2.36	—	—

[1] -90 and -00 indicate gold plated finish.

SMA In-Series Adapters (MIL-A-55339)

MIL-A-55339

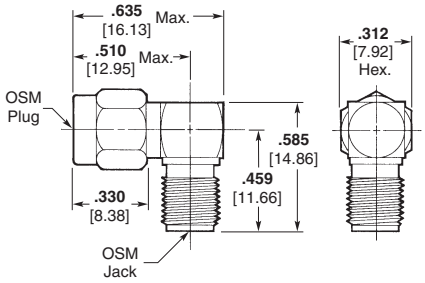

Outline 1

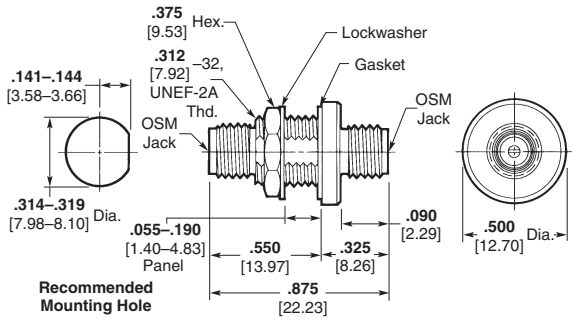

Outline 2

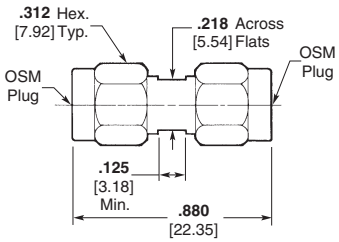

Outline 3

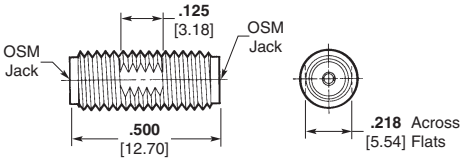

Outline 4

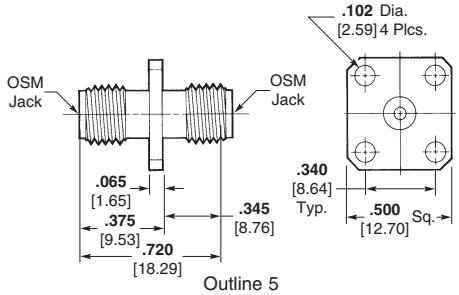

Outline 5

Military Part No. M55339	TE Part No.	Reference[1] Part No. (Ref. Only)	Outline	COTS Part No.	Reference[1] Part No. (Ref. Only)
/02-30001	1055091-1	2088-8001-92	1	1055065-1 1055064-1	2088-0000-02 2088-0000-00
/28-30001	1054986-1	2084-8001-92	2	1054875-1 1054874-1	2084-1100-02 2084-1100-00
/28-30002	1054988-1	2084-8002-92	5	—	—
/29-30001	1053765-1	2081-8001-92	3	1053635-1 1053634-1	2081-0000-02 2081-0000-00
*/29-30101	1053767-1	2081-8101-92	3	1053635-1 1053634-1	2081-0000-02 2081-0000-00
/31-30001	1053633-1	2080-8001-92	4	1053489-1 1053488-1	2080-0000-02 2080-0000-00

* No safety wire holes.
[1] -92 and -02 indicate passivated stainless steel finish. -00 indicates gold plated finish.

Catalog 1308940
Revised 9-14

www.te.com

Dimensions are shown for reference purposes only. Specifications subject to change.

Dimensions are in millimeters unless otherwise specified.

USA: +1 800 522 6752
Asia Pacific: +86 0 400 820 6015
UK: +44 800 267 666

For additional support numbers please visit www.te.com

SMA Receptacles (MIL-C-83517) — Panel Mount

Panel Mount Jacks, Solder Tab

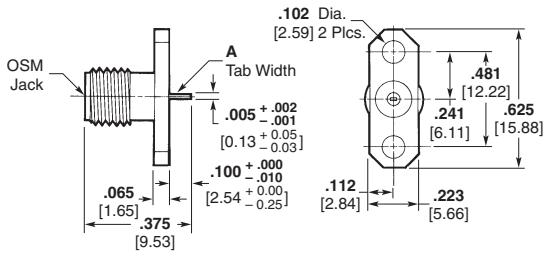

Outline 1

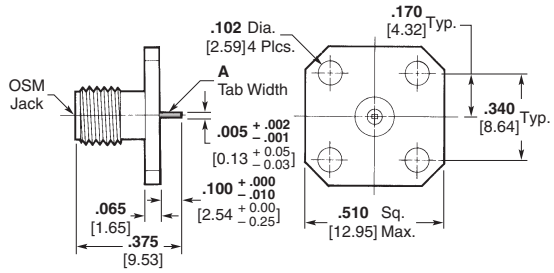

Outline 2

Military Part No. M83517/1	TE Part No.	Reference[1] Part No. (Ref. Only)	Outline	Dimension A	COTS Part No.	Reference[1] Part No. (Ref. Only)
-31001	1052928-1	2052-8003-92	1	.020 ±.002 0.51 ±.051	—	—
-31002	1052930-1	2052-8004-92	1	.050 ±.001 1.27 ±.025	1052577-1	2052-1658-02
-31003	1052932-1	2052-8005-92	2	.020 ±.002 0.51 ±.051	1052898-1 1052897-1	2052-5636-02 2052-5636-00
-31004	1052934-1	2052-8006-92	2	.050 ±.001 1.27 ±.025	1052566-1 1052565-1	2052-1618-02 2052-1618-00
-32001	1052927-1	2052-8003-90	1	.020 ±.002 0.51 ±.051	—	—
-32002	1052929-1	2052-8004-90	1	.050 ±.001 1.27 ±.025	1052577-1	2052-1658-02
-32003	1052931-1	2052-8005-90	2	.020 ±.002 0.51 ±.051	1052898-1 1052897-1	2052-5636-02 2052-5636-00
-32004	1052933-1	2052-8006-90	2	.050 ±.001 1.27 ±.025	1052566-1 1052565-1	2052-1618-02 2052-1618-00

[1] -92 and -02 indicate passivated stainless steel finish. -90 and -00 indicate gold plated finish.

Panel Mount Plugs, Solder Tab

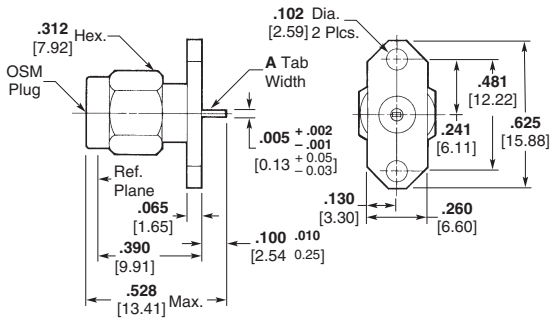

Outline 3

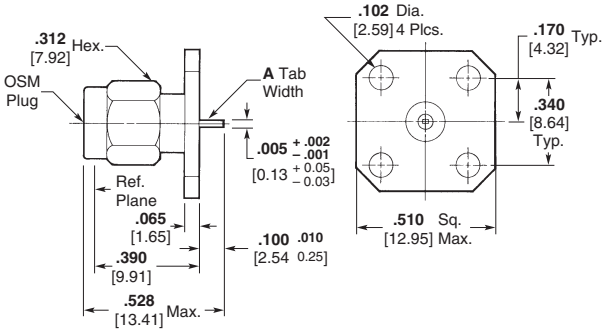

Outline 4

Military Part No. M83517/2	TE Part No.	Reference[1] Part No. (Ref. Only)	Outline	Dimension A
-31001	1052409-1	2051-8001-92	3	.020 ±.002 0.51 ±.051
-31002	1052411-1	2051-8002-92	3	.050 ±.001 1.27 ±.025
-31003	1052413-1	2051-8003-92	4	.020 ±.002 0.51 ±.051
-31004	1052415-1	2051-8004-92	4	.050 ±.001 1.27 ±.025

[1] -92 indicates passivated stainless steel finish.
-90 indicates gold plated finish.

Military Part No M83517/2	TE Part No.	Reference[1] Part No. (Ref. Only)	Outline	Dimension A
-32001	1052408-1	2051-8001-90	3	.020 ±.002 0.51 ±.051
-32002	1052410-1	2051-8002-90	3	.050 ±.001 1.27 ±.025
-32003	1052412-1	2051-8003-90	4	.020 ±.002 0.51 ±.051
-32004	1052414-1	2051-8004-90	4	.050 ±.001 1.27 ±.025

Dimensions are shown for reference purposes only. Specifications subject to change.

Dimensions are in millimeters unless otherwise specified.

USA: +1 800 522 6752
Asia Pacific: +86 0 400 820 6015
UK: +44 800 267 666

For additional support numbers please visit www.te.com

SMA Receptacles (MIL-C-83517) — Panel Mount (Continued)

Panel Mount Jacks, Slotted Contact

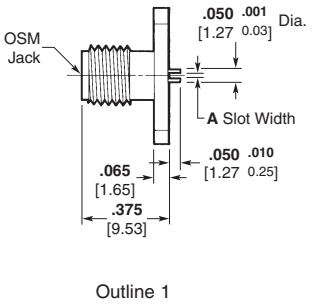

Outline 1

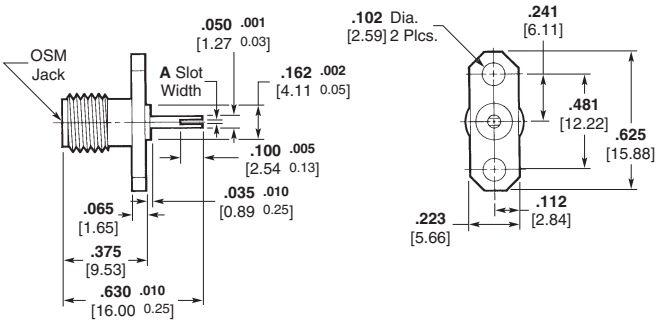

Outline 2

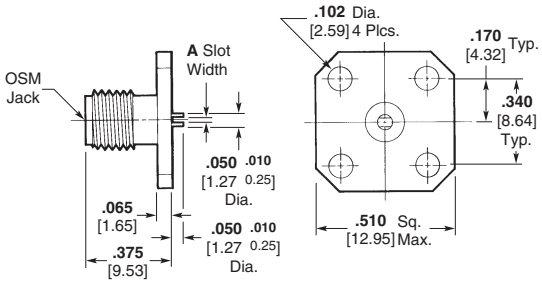

Outline 3

Military Part No. M83517/3	TE Part No.	Reference[1] Part No. (Ref. Only)	Outline	Dimension A	COTS Part No.	Reference[1] Part No. (Ref. Only)
-31001	1052936-1	2052-8007-92	1	.012 +.003/–.001 0.30 +0.08/–0.03	1251095-1	2052-1650-02
-31002	1052938-1	2052-8008-92	1	.018 +.003/–.001 0.46 +0.08/–0.03	—	—
-31003	1052940-1	2052-8009-92	1	.028 +.003/–.001 0.71 +0.08/–0.03	—	—
-31004	1052942-1	2052-8010-92	3	.012 +.003/–.001 0.30 +0.08/–0.03	—	—
-31005	1052944-1	2052-8011-92	3	.018 +.003/–.001 0.46 +0.08/–0.03	1052563-1	2052-1612-02
-31006	1052946-1	2052-8012-92	3	.028 +.003/–.001 0.71 +0.08/–0.03	—	—
-31007	1052948-1	2052-8013-92	2	.025 ±.002 0.64 ±0.05	—	—
-32001	1052935-1	2052-8007-90	1	.012 +.003/–.001 0.30 +0.08/–0.03	1251095-1	2052-1650-02
-32002	1052937-1	2052-8008-90	1	.018 +.003/–.001 0.46 +0.08/–0.03	—	—
-32003	1052939-1	2052-8009-90	1	.028 +.003/–.001 0.71 +0.08/–0.03	—	—
-32004	1052941-1	2052-8010-90	3	.012 +.003/–.001 0.30 +0.08/–0.03	—	—
-32005	1052943-1	2052-8011-90	3	.018 +.003/–.001 0.46 +0.08/–0.03	1052563-1	2052-1612-02
-32006	1052945-1	2052-8012-90	3	.028 +.003/–.001 0.71 +0.08/–0.03	—	—
-32007	1052947-1	2052-8013-90	2	.025 ±.002 0.64 ±0.05	—	—

[1] -92 and -02 indicate passivated stainless steel finish. -90 indicates gold plated finish.

Dimensions are shown for reference purposes only. Specifications subject to change.

Dimensions are in millimeters unless otherwise specified.

USA: +1 800 522 6752
Asia Pacific: +86 0 400 820 6015
UK: +44 800 267 666

For additional support numbers please visit www.te.com

SMA Receptacles (MIL-C-83517) — Panel Mount (Continued)

Panel Mount Jacks, Contact Post

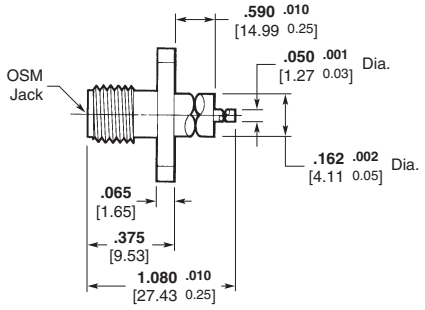

Outline 1

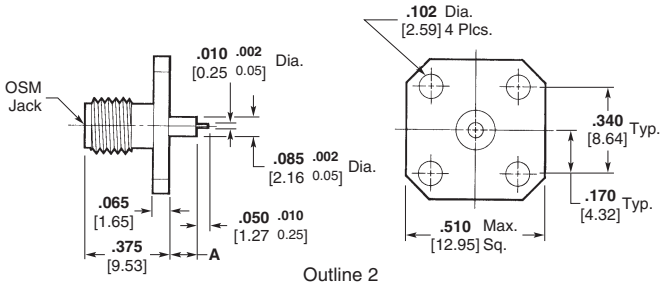

Outline 2

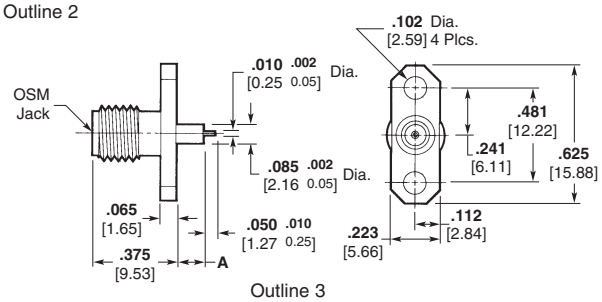

Outline 3

Military Part No. M83517/4	TE Part No.	Reference[1] Part No. (Ref. Only)	Outline	Dimension A	COTS Part No.	Reference[1] Part No. (Ref. Only)
-31001	1052950-1	2052-8014-92	3	.057 ±.003 1.45 ±.076	—	—
-31002	1052952-1	2052-8015-92	3	.125 ±.003 3.18 ±.076	1052902-1 1052901-1	2052-5674-02 2052-5674-00
-31003	1052954-1	2052-8016-92	2	.057 ±.003 1.45 ±.076	—	—
-31004	1052956-1	2052-8017-92	2	.125 ±.003 3.18 ±.076	1052528-1 1052527-1	2052-1215-02 2052-1215-00
-31005	1052958-1	2052-8018-92	1	N/A	1052523-1 1052522-1	2052-1201-02 2052-1201-00
-32001	1052949-1	2052-8014-90	3	.057 ±.003 1.45 ±.076	—	—
-32002	1052951-1	2052-8015-90	3	.125 ±.003 3.18 ±.076	1052902-1 1052901-1	2052-5674-02 2052-5674-00
-32003	1052953-1	2052-8016-90	2	.057 ±.003 1.45 ±.076	—	—
-32004	1052955-1	2052-8017-90	2	.125 ±.003 3.18 ±.076	1052528-1 1052527-1	2052-1215-02 2052-1215-00
-32005	1052957-1	2052-8018-90	1	N/A	1052523-1 1052522-1	2052-1201-02 2052-1201-00

[1] -92 and -02 indicate passivated stainless steel finish. -90 and -00 indicate gold plated finish.

Panel Mount Plugs, Contact Post

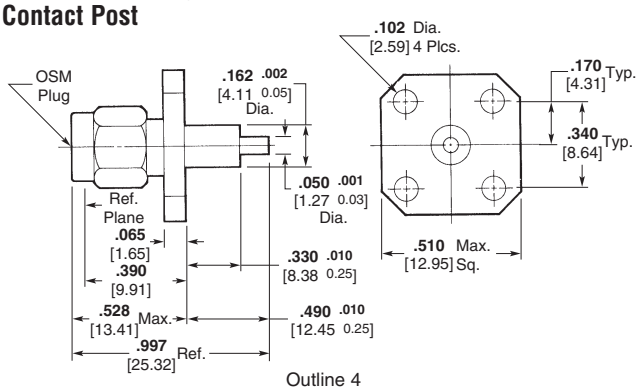

Outline 4

Military Part No. M83517/5	TE Part No.	Reference[1] Part No. (Ref. Only)	Outline
-31001	1052417-1	2051-8005-92	4
-32001	1052416-1	2051-8005-90	4

[1] -92 indicates passivated stainless steel finish.
-90 indicates gold plated finish.

Dimensions are shown for reference purposes only. Specifications subject to change.

Dimensions are in millimeters unless otherwise specified.

USA: +1 800 522 6752
Asia Pacific: +86 0 400 820 6015
UK: +44 800 267 666

For additional support numbers please visit www.te.com

SMA Receptacles (MIL-C-83517) — Surface Launch

Surface Launch Jacks

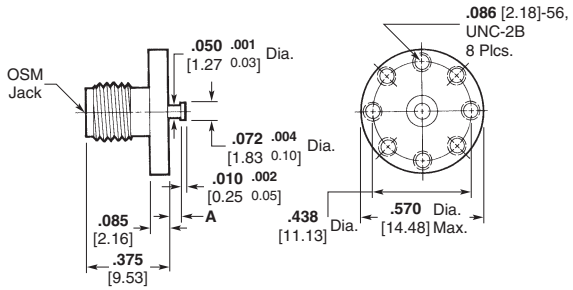

Outline 1

Military Part No. M83517/6	TE Part No.	Reference[1] Part No. (Ref. Only)	Outline	Dimension A	COTS Part No.	Reference[1] Part No. (Ref. Only)
-31001	1053423-1	2066-8001-92	1	.060 ±.003 1.52 ±0.08	—	—
-31002	1053425-1	2066-8002-92	1	.120 ±.003 3.05 ±0.08	1053415-1	2066-1403-00
-32001	1053422-1	2066-8001-90	1	.060 ±.003 1.52 ±0.08	—	—
-32002	1053424-1	2066-8002-90	1	.120 ±.003 3.05 ±0.08	1053415-1	2066-1403-00

[1] -92 indicates passivated stainless steel finish. -90 and -00 indicate gold plated finish.

Surface Launch Plugs

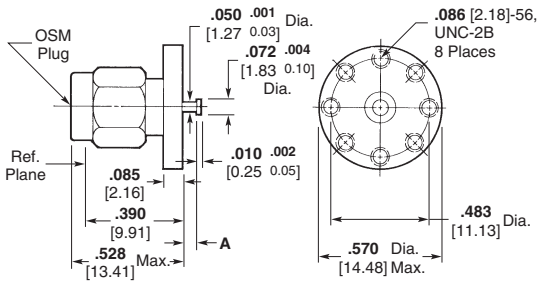

Outline 2

Military Part No. M83517/7	TE Part No.	Reference[1] Part No. (Ref. Only)	Outline	Dimension A
-31001	1053429-1	2067-8001-92	2	.060 ±.003 1.52 ±0.08
-31002	1053431-1	2067-8002-92	2	.120 ±.003 3.05 ±0.08
-32001	1053428-1	2067-8001-90	2	.060 ±.003 1.52 ±0.08
-32002	1053430-1	2067-8002-90	2	.120 ±.003 3.05 ±0.08

[1] -92 indicates passivated stainless steel finish. -90 indicates gold plated finish.

Surface Launch Right Angle Jacks

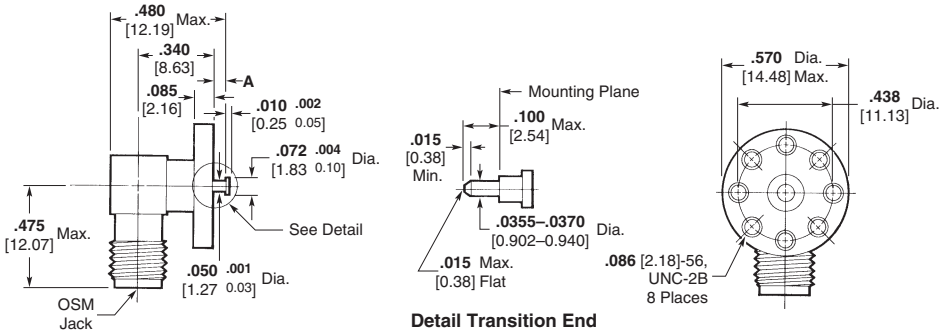

Outline 3

Military Part No. M83517/8	TE Part No.	Reference[1] Part No. (Ref. Only)	Outline	Dimension A	COTS Part No.	Reference[1] Part No. (Ref. Only)
-31001	1053451-1	2068-8001-92	3	.060 ±.003 1.52 ±0.08	1053438-1	2068-5156-00
-31002	1053453-1	2068-8002-92	3	.120 ±.003 3.05 ±0.08	—	—
-32001	1053450-1	2068-8001-90	3	.060 ±.003 1.52 ±0.08	1053438-1	2068-5156-00
-32002	1053452-1	2068-8002-90	3	.120 ±.003 3.05 ±0.08	—	—

[1] -92 indicates passivated stainless steel finish. -90 and -00 indicate gold plated finish.

SMA Receptacles (MIL-C-83517) — End Launch

End Launch Jacks

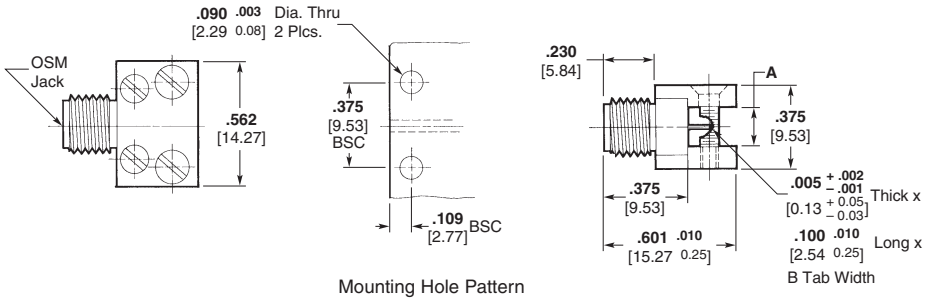

Outline 1

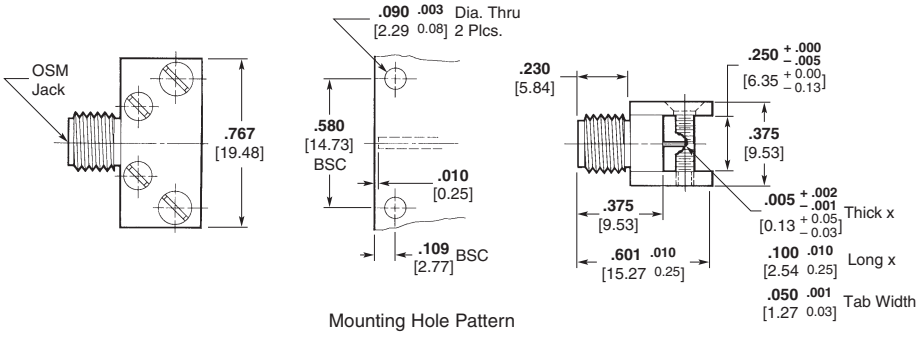

Outline 2

Military Part No. M83517/9	TE Part No.	Reference[1] Part No. (Ref. Only)	Outline	Dimension A	Dimension B	COTS Part No.	Reference[1] Part No. (Ref. Only)
-31001	1053476-1	2070-8001-92	1	**.057–.064** 1.45–1.63	**.025 ± .002** 0.64 ± 0.05	—	—
-31002	1053478-1	2070-8002-92	1	**.120–.127** 3.05–3.23	**.050 ± .001** 1.27 ± 0.03	1053465-1	2070-5068-02
-31003	1053480-1	2070-8003-92	1	**.245–.250** 6.22–6.35	**.050 ± .001** 1.27 ± 0.03	1053467-1	2070-5069-02
-31004	1053482-1	2070-8004-92	2	N/A	N/A	—	—
-32001	1053475-1	2070-8001-90	1	**.057–.064** 1.45–1.63	**.025 ± .002** 0.64 ± 0.05	—	—
-32002	1053477-1	2070-8002-90	1	**.120–.127** 3.05–3.23	**.050 ± .001** 1.27 ± 0.03	1053465-1	2070-5068-02
-32003	1053479-1	2070-8003-90	1	**.245–.250** 6.22–6.35	**.050 ± .001** 1.27 ± 0.03	1053467-1	2070-5069-02
-32004	1053481-1	2070-8004-90	2	N/A	N/A	—	—

[1] -92 and -02 indicate passivated stainless steel finish. -90 indicates gold plated finish.

Dimensions are shown for reference purposes only. Specifications subject to change.

Dimensions are in millimeters unless otherwise specified.

USA: +1 800 522 6752
Asia Pacific: +86 0 400 820 6015
UK: +44 800 267 666

For additional support numbers please visit www.te.com

SMA Receptacles (MIL-C-83517) — Field Replaceable Launchers

Field Replaceable Launchers

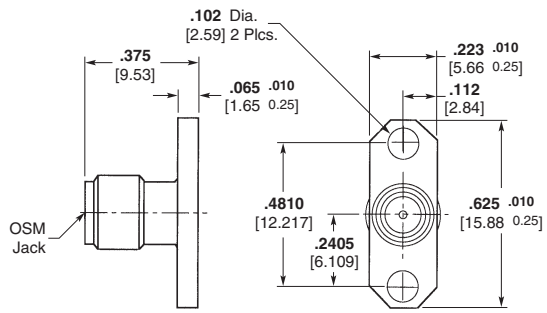

Outline 1

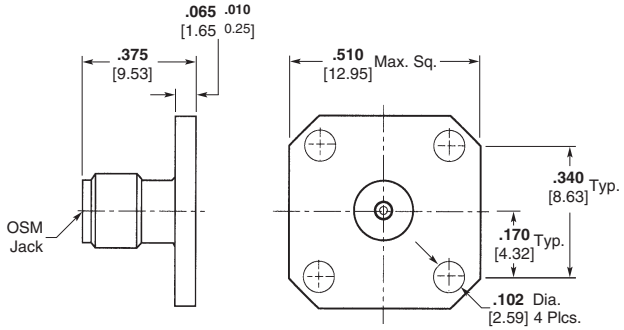

Outline 2

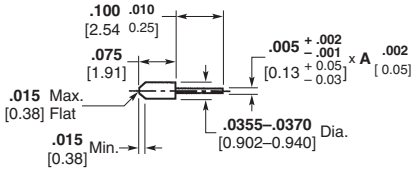

Transition Pin Detail

Military Part No. M83517/10	TE Part No.	Reference[1] Part No. (Ref. Only)	Outline	Dimension A	COTS Part No.	Reference[1] Part No. (Ref. Only)
-31001	1052959-1	2052-8019-92	1	—	1052646-1	2052-3359-02
-31003	1052962-1	2052-8021-92	2	—	1052643-1	2052-3358-02
-31005	1052963-1	2052-8023-92	1	.020 ± .002 0.51 ± 0.05	—	—
-31006	1484518-1	2052-8024-92	1	.050 ± .002 1.27 ± 0.05	—	—
-31015	1484519-1	2052-8033-92	2	.020 ± .002 0.51 ± 0.05	1052643-1	2052-3358-02
-31016	1484520-1	2052-8034-92	2	.050 ± .002 1.27 ± 0.05	—	—
-32001	1484521-1	2052-8019-90	1	—	1052646-1	2052-3359-02
-32003	1052961-1	2052-8021-90	2	—	1052643-1	2052-3358-02
-32005	1484522-1	2052-8023-90	1	.020 ± .002 0.51 ± 0.05	—	—
-32006	1484523-1	2052-8024-90	1	.050 ± .002 1.27 ± 0.05	—	—
-32015	1484524-1	2052-8033-90	2	.020 ± .002 0.51 ± 0.05	—	—
-32016	1484525-1	2052-8034-90	2	.050 ± .002 1.27 ± 0.05	—	—

[1] -92 and -02 indicate passivated stainless steel finish. -90 indicates gold plated finish.

Between Series Adapters

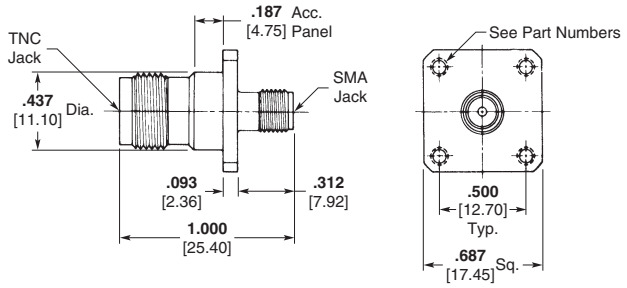

Outline 78

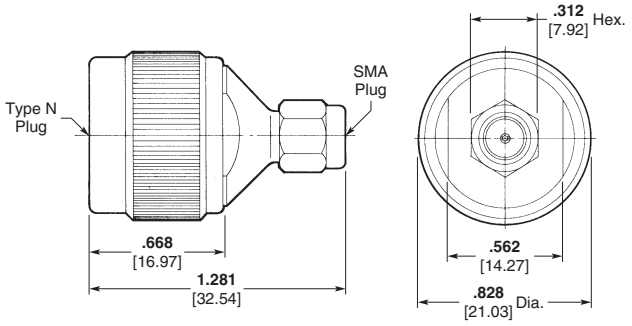

Outline 80

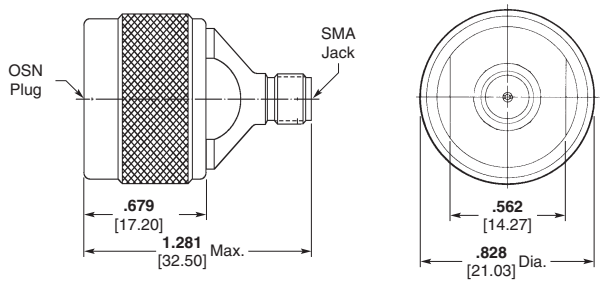

Outline 83

DSCC Part Number	Reference Part Number (Ref. Only)	Outline	Description	TE Part Number
8501814FP-1[1]	3180-4034-02[1]	78	SMA Jack to TNC Jack	1057848-1
8501814FP-2[2]	3180-4036-02[2]	78	SMA Jack to TNC Jack	1080294-1
8604412SP-1	3081-4002-02	80	SMA Plug to Type N Plug	1057371-1
8604412SP-4	3082-4031-02	83	Type N Plug to SMA Jack	1057403-1

[1] .125 [3.20] Dia. Typ. (4 Plcs.)
[2] Tapped holes to accommodate 3-56 UNF mounting screws.

* Defense Electronics Supply Center, Dayton, Ohio

Dimensions are shown for reference purposes only. Specifications subject to change.

Dimensions are in millimeters unless otherwise specified.

USA: +1 800 522 6752
Asia Pacific: +86 0 400 820 6015
UK: +44 800 267 666

For additional support numbers please visit www.te.com

Between Series Adapters (Continued)

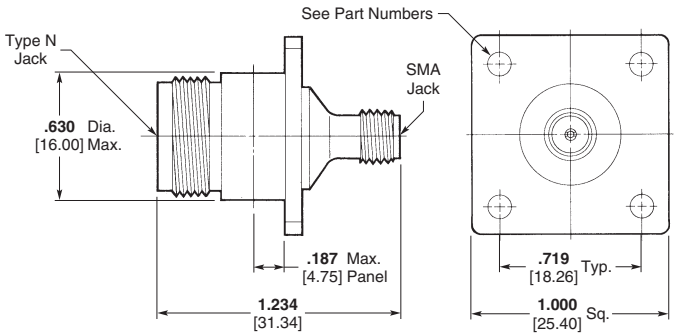

Outline 84

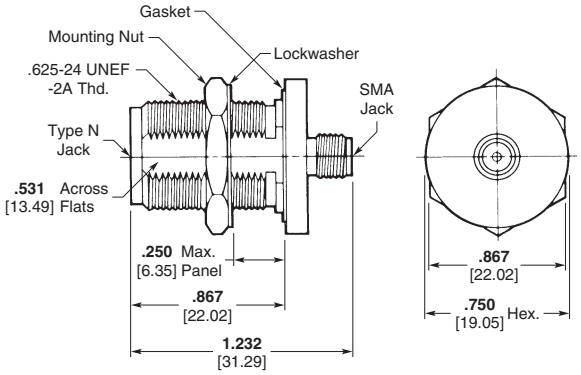

Outline 85

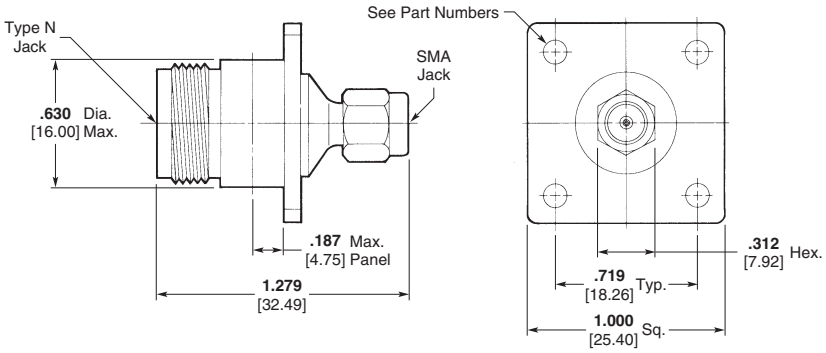

Outline 86

DSCC Part Number	Reference Part Number (Ref. Only)	Outline	Description	TE Part Number
8503812FP-1[1]	3080-4010-02[1]	84	SMA Jack to Type N Jack	1057354-1
8503812FP-2[2]	3080-4015-02[2]	84	SMA Jack to Type N Jack	1057357-1
8503812FP-3	3084-4001-00	85	SMA Jack to Type N Jack	1057465-1
8503812FP-4[1]	3082-4028-02[1]	86	SMA Plug to Type N Jack	1057402-1
8503812FP-5[2]	3082-4029-02[2]	86	SMA Plug to Type N Jack	1252992-1
8503812FP-6[1]	3080-4019-02[1]	84	SMA Jack to Type N Jack	1057359-1
8503812FP-7[2]	3080-4020-02[2]	84	SMA Jack to Type N Jack	1087866-1

[1] .125 [3.20] Dia. Typ. (4 Plcs.)
[2] Tapped holes to accommodate 3-56 UNF mounting screws.

* Defense Electronics Supply Center, Dayton, Ohio

Dimensions are shown for reference purposes only. Specifications subject to change.

Dimensions are in millimeters unless otherwise specified.

USA: +1 800 522 6752
Asia Pacific: +86 0 400 820 6015
UK: +44 800 267 666

For additional support numbers please visit www.te.com

SMPM Micro-Miniature Push-on Coaxial Connectors

Product Facts

- **Push-on style interconnect, allowing control of the mating forces when mating multiple connectors**
- **30% smaller than SMP interconnects**
- **Complies with MIL-STD-348A**

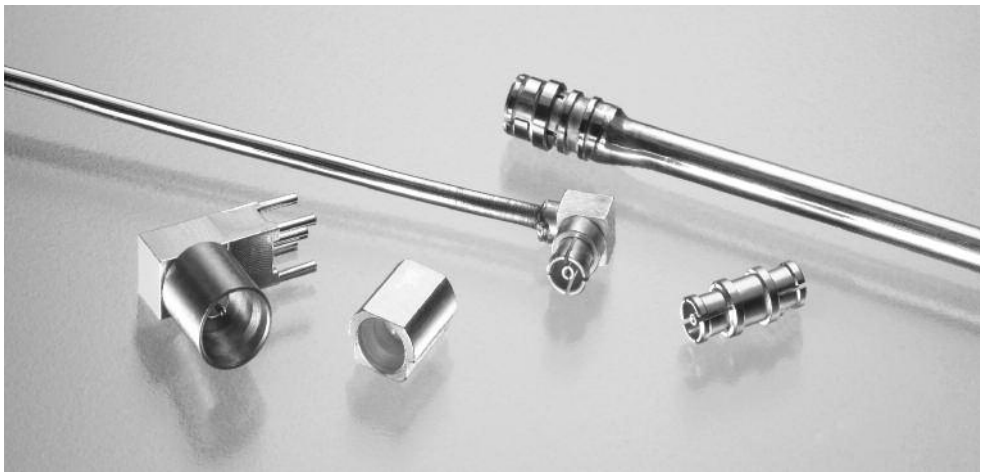

Description

A high performance micro-miniature, push-on coaxial interconnect system.

Extremely small size interconnection that offers a versatile solution for high density packaging, allowing center-to-center spacing of 0.135".

Applications

Military and Aerospace applications for communications, radar systems, antennas.

Industrial applications that require a rugged, densely packaged RF interconnect system.

Product Offering

- Shrouds; flange mount, thread-in and press-in (full detent and smooth bore)
- Hermetic shrouds (single and dual positions)
- Edge mount PCB shrouds
- Thru-hole mount PCB shrouds
- Surface mount PCB shrouds (full detent, smooth bore and catcher's mitt designs)
- Adapters, custom lengths and spring loaded options
- Straight and right-angle jacks for .047 cable

Electrical Performance

VSWR — 1.50:1 max to 40 GHz

Impedance — 50 ohm

Contact Resistance — Center - 6 milliohms max, Outer - 2 milliohms max.

Insulation Resistance — 5000 megohms min.

Dielectric Withstanding Voltage — 225 Vrms min.

Insertion Loss — 0.12 dB max. typical

Mechanical

Force to Engage — 4.5 lbs. typical full detent; 2.5 lbs. typical smooth bore

Force to Disengage — 6.5 lbs. typical full detent; 1.5 lbs. typical smooth bore

Radial Misalignment — ±.010"

Vibration — EIA-364-28, Test condition III

Mechanical Shock — EIA-364-27, Method G

Durability — EIA-364-9, 100 cycles min.

Material and Finish

Housings and Center Contacts — Beryllium Copper per ASTM-B-196; gold plate over nickel plate

Dielectric — PTFE Fluorocarbon per ASTM-D-1457

Shrouds — Stainless steel per ASTM-A582 Type 303; passivate per ASTM-A380

Hermetic Seal — Glass bead

Standards and Specifications

MIL-STD-348A

General Specifications

Temperature Range — -55 to +125 °C

Voltage Rating — 150 volts AC

Environmental Performance

Thermal Shock — EIA-364-32, 5 cycles

Humidity-temperature — EIA-364-31 Method III, 10 cycles

Salt Spray Corrosion — EIA-364-26, Condition B

Temperature Life — EIA-364-17, Method A, test condition 5

Catalog 1308940
Revised 9-14

www.te.com

Dimensions are shown for reference purposes only. Specifications subject to change.

Dimensions are in millimeters unless otherwise specified.

USA: +1 800 522 6752
Asia Pacific: +86 0 400 820 6015
UK: +44 800 267 666

For additional support numbers please visit www.te.com

SMPM Micro-Miniature Push-on Coaxial Connectors (Continued)

Vertical Through-Hole PCB Mount — Part No. 1757644-1

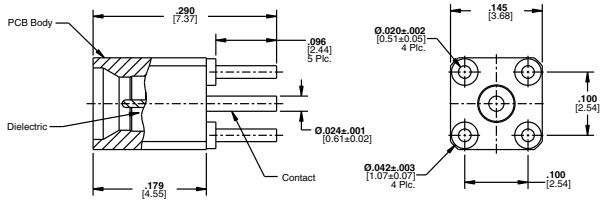

PCB Edge Mount — Part No. 1757640-1 Full Detent
1757640-2 Smooth Bore

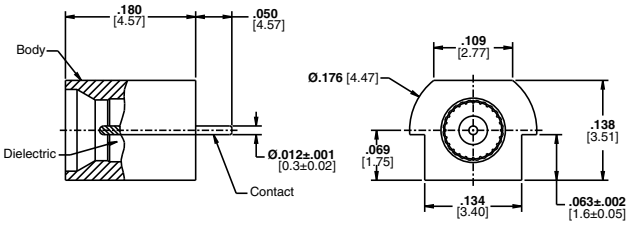

PCB Surface Mount, Smooth Bore — Part No. 1757253-1 Smooth Bore
1757254-1 Full Detent

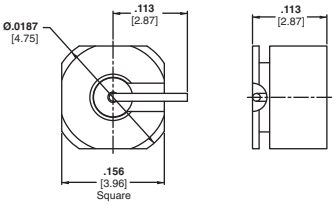

PCB Surface Mount, — Part No. 1757639-1 Full Detent
Through-hole Legs

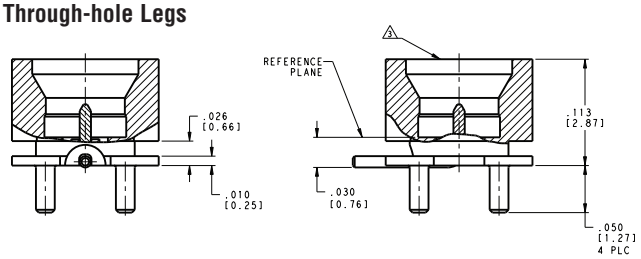

Hermetic, Smooth Bore, 2 Pos.
Part No. 1663434-1

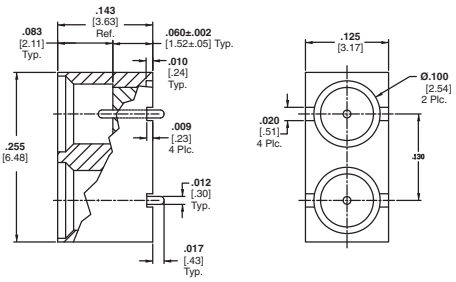

Hermetic Smooth Bore
Part No. 1663433-1

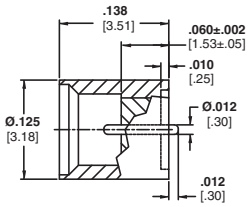

Female Bullet Adapter — Part No. 1757256-1

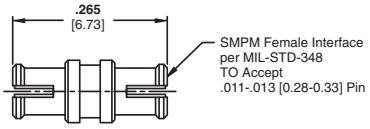

Jack to Jack, Adapter, Spring Bullet — Part No. 1757257-1

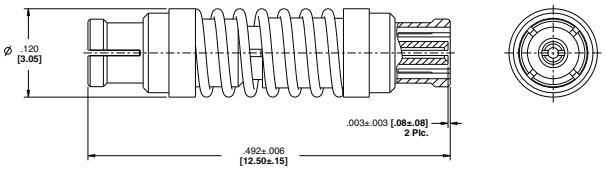

Cable Jack, Straight — Part No. 1757642-1 — .047 dia. cable
1996328-1 — .086 dia. cable

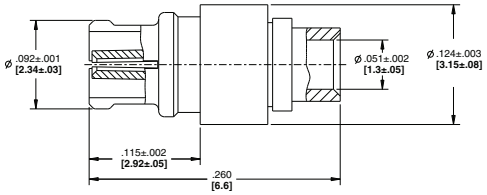

Cable Jack, Right-Angle — Part No. 1757643-1 — .047 dia. cable

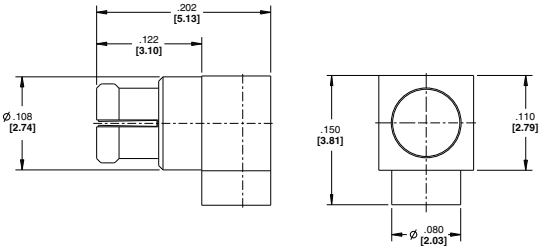

Cable Jack, Right-Angle — Part No. 1757638-1 — .047 dia. cable

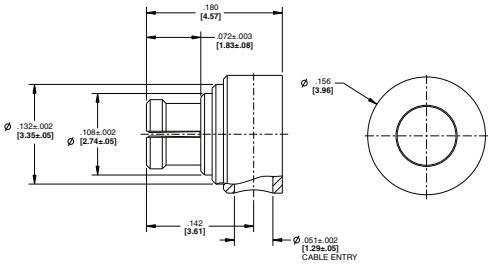

Catalog 1308940
Revised 9-14

www.te.com

Dimensions are shown for reference purposes only. Specifications subject to change.

Dimensions are in millimeters unless otherwise specified.

USA: +1 800 522 6752
Asia Pacific: +86 0 400 820 6015
UK: +44 800 267 666

For additional support numbers please visit www.te.com

Multi-position Backplane RF Modules

Product Facts

- **Modular design permits application specific configuration with high RF contact count**
- **Float mounted jack maintains positive RF ground**
- **.240 center-to-center spacing**
- **High channel to channel isolation**
- **4 and 8 position modules are designed to meet the requirements of VITA 67.1 and VITA 67.2**
- **RF contacts are available for a variety of low loss cables**

Compliant pin backplane contacts are available

- **RF cable assemblies**

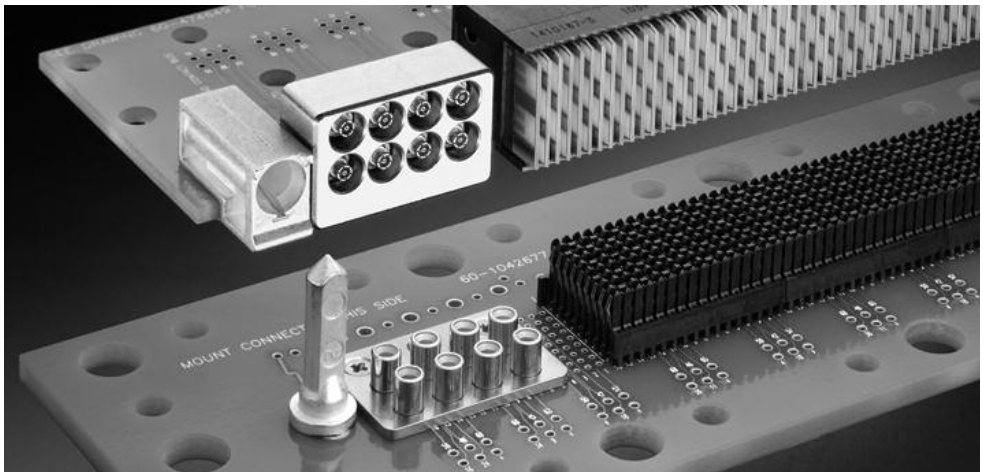

Description

Modular, high density, blind-mate RF backplane connection system combining a high performance, broad bandwidth multi-position RF interconnect in a customer configurable platform.

Applications

- Backplane/daughter card applications
- Electronic countermeasure systems
- Land & sea anti-ballistic signal processing
- UAV electronic sensing and processing
- Avionics & ground based radar systems
- Ground base stations & communication systems
- Central computing, satellite on-board & ship-board computing

Standards & Specs

Materials and plating meet the requirements of MIL-PRF-39012

SMPM RF contact interfaces IAW MIL-STD-348

Designed to meet the vibration, environmental and corrosion resistance requirements of ANSI/VITA 47

Designed and qualified IAW VITA 67.0; VITA 67.1 and VITA 67.2

Product Specification: 108-2443

IS Sheet: 408-10387

Test Report: 501-748

Materials

Center Contacts: Beryllium copper, gold plated

Connector Housings: Beryllium copper, gold plated

Module Body: Type 303 Corrosion resistant steel, with passivation treatment and aluminum alloy 6061-T6, with Trivalent chromate conversion coating

Springs: Nickel plated music wire or Type 316 corrosion resistant steel, with passivation treatment

Insulators: PTFE

Mechanical

Durability: EIA-364-9, 500 mating cycles (smooth bore)

Vibration: EIA-364-28, Test Condition III

Mechanical Shock: EIA-364-27, Method G

Operating Temperature: -55˚C to +85˚C

Humidity/Temperature Cycling: EIA-364-31, Method III

Physical or Other Properties

Misalignment: Axial float: .079 (2.0mm) min.

Radial Misalignment: +/- .010 min.

Force to Engage: 18.75 N (4.2 lbf) typical

Force to Disengage: 3.25 N (0.73 lbf) typical

Float Mount Preload: 0.52 N (2.3 lbf) lbs. typical

Float Mount Force at Full Deflection: 20.0 N (5.0 lbf) lbs. typical

Note: all values are typical for a single RF contact.

Catalog 1308940
Revised 9-14

www.te.com

Dimensions are shown for reference purposes only. Specifications subject to change.

Dimensions are in millimeters unless otherwise specified.

USA: +1 800 522 6752
Asia Pacific: +86 0 400 820 6015
UK: +44 800 267 666

For additional support numbers please visit www.te.com

Multi-position Backplane RF Modules (Continued)

Electrical

Impedance — 50 ohm

Frequency — P.C.B. Mounted Contacts - DC — 6.0 GHz

Semi-Rigid Cable Contacts - DC — 26.5 GHz

Flexible Cable Contacts - DC — 20 GHz

VSWR — 1.15:1 to 20 Ghz; 1.25 max. to 26.5 GHz

Insertion Loss — .12 sqrt f (GHz) dB max.

Insulation Resistance — 5000 megaohms min.

DWV @ Sea Level — 325 Vrms min.

Contact Resistance — Center 6 milliohms max., outer 2 milliohms max.

Isolation (Channel to Channel) —
SHF (3-30 GHz): >100 dB
VHF/UHF (30 MHz-3 GHz): >120 dB
HF (3-30 MHz): >140 dB

RF Power @ 105 C (C.W. Ave.) —
VHF/UHF/SHF (30 MHz-30GHz): >20 dBm
HF (3-30 MHz): >30 dBm

Note: The maximum operating frequency is limited by the specifications of the selected cable.

Part Dimensions

Dimensions are in inches

4 Position

Part Number 1996883-4 — VITA 67.1 Daughter Card Module

Part Number 1996884-1 — VITA 67.1 Backplane Module

Part Number 1996883-4

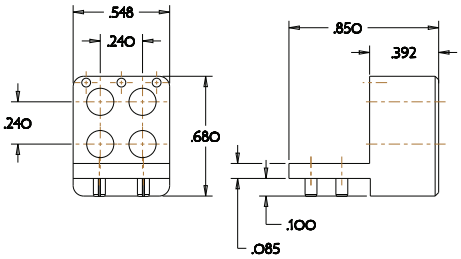

Part Number 1996884-1

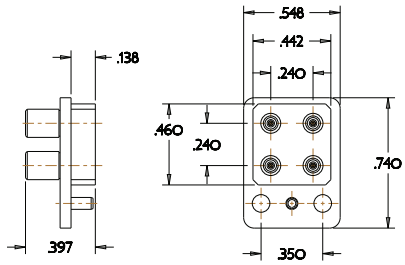

8 Position

Part Number 1996705-4 — VITA 67.2 Daughter Card Module

Part Number 1996706-1 — VITA 67.2 Backplane Module

Part Number 1996705-4

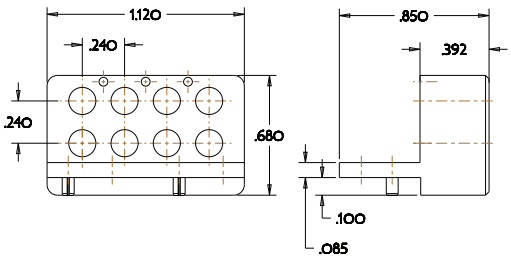

Part Number 1996706-1

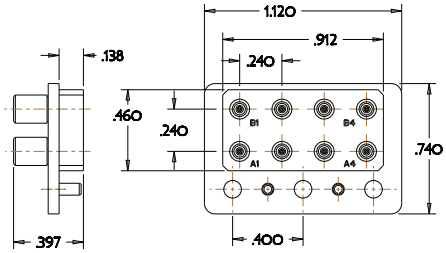

SMPM Contacts for Daughtercard modules:

.047 semi-rigid cable: 1996771-1

.086 semi-rigid cable: 1996390-1

Consult TE for flexible cable/contact compatibility

Note: Other configurations and options are available, contact TE.

SMP Micro-Miniature Push-On Coaxial Connectors

Features

- **Intermateable with Gilbert GPO™ Series**
- **Enhanced performance features**
- **Simplified Assembly**
- **DSCC Approved**

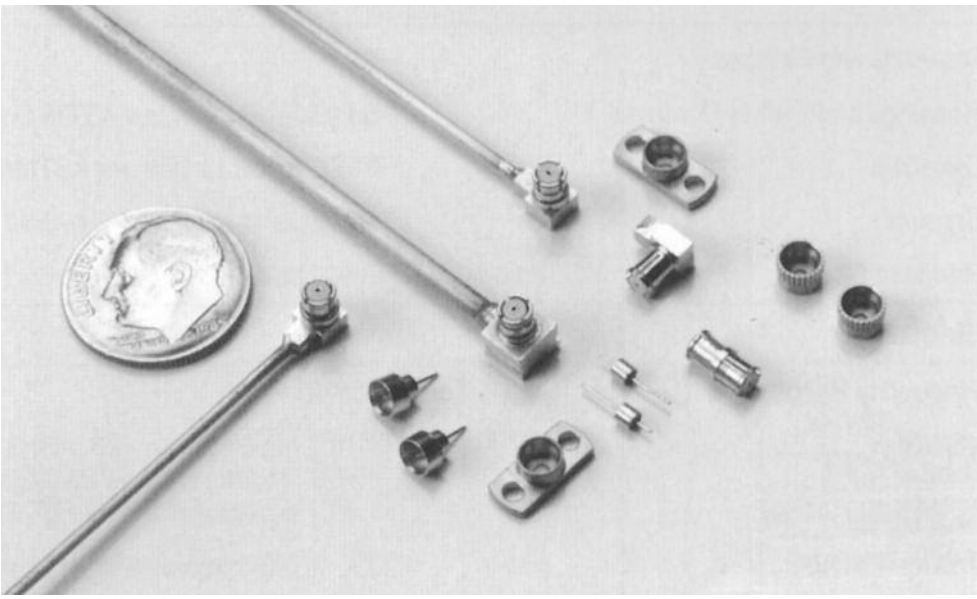

SMP micro-miniature push-on coaxial connectors provide solutions for today's modular designs with denser packaging requirements. The extremely small size of the SMP offers a versatile solution for high density packaging allowing connector center-to-center spacing of 0.17 [4.32]. The push-on interface facilitates easier assembly and test with a positive snap-in feature to indicate a fully mated connection. The rugged SMP interface can better withstand harsh environments of mechanical shock and vibration, typically found in military or aerospace related applications. This SMP connector interface is the standard used by Defense Electronics Supply Center (DSCC) to generate the SMP push-on connector series. For DSCC Part Numbers, see page 2-31.

SMP connectors can be your design solution for mechanical packaging and frequency response. The SMP interface provides 0.010" of radial misalignment for critical blindmate applications. Mating forces are strictly controlled for reliable connections per mated pair or when simultaneously mating multiple connectors. Cable jacks include an anti-rocking ring for reliable mechanical performance for harsh operating environments. SMP connectors offer enhanced broadband VSWR performance of 1.15:1 max thru 26.5GHz and 1.70:1 max thru 40GHz.

Standard design SMP configurations include cable connectors, straight and right-angle, for 0.047 and 0.085 semi-rigid cable, full detent, limited detent and smooth bore mating shrouds that can be bulkhead or flange mounted and glass feedthroughs for coax to circuit launchers. In-series adapters for module-to-module intermating and between series adapters for integrating or testing systems or components parameters.

SMP Shroud and Jack-to-Jack Adapter Assembly

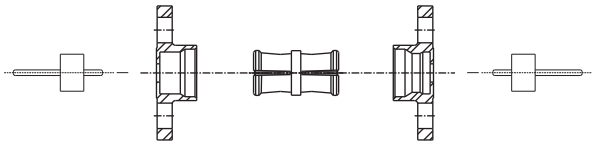

Gilbert GPO Series — Trademark of Corning Incorporated

Catalog 1308940
Revised 9-14

www.te.com

Dimensions are shown for reference purposes only. Specifications subject to change.

Dimensions are in millimeters unless otherwise specified.

USA: +1 800 522 6752
Asia Pacific: +86 0 400 820 6015
UK: +44 800 267 666

For additional support numbers please visit www.te.com

SMP Micro-Miniature Push-On Coaxial Connectors (Continued)

Specifications

General		
Materials and Finishes		
Housings and Center Contacts	Beryllium Copper per ASTM-B-196; gold plate over nickel plate	
Dielectric	PTFE Fluorocarbon per ASTM-D-1457	
Shrouds	Stainless steel per ASTM-A582 Type 303; passivate per ASTM-A380	
Hermetic Seal	Glass bead	
Electrical		
Frequency Range	dc - 40.0 GHz	
VSWR	1.10:1 Maximum dc - 23.0 GHz	
	1.15:1 Maximum 23.0 - 26.5 GHz	
	1.70:1 Maximum 40.0 GHz	
Voltage Rating	335 Vrms maximum at sea level	
Insertion Loss	$0.10\ f\sqrt{(GHz)}$ dB	
Insulation Resistance	5000 megohms minimum	
Dielectric Withstanding Voltage	500 volts (VRMS minimum)	
RF High Potential	325 volts (VRMS minimum) @ 5 MHz	
Impedance	50 ohms nominal	
RF Leakage	-80dB to 3 GHz, -65dB from 3 to 26.5 GHz minimum	
Contact Resistance	Initial center contact 6.0 milliohms maximum	
	Outer contact 2.0 milliohms maximum	
Mechanical		
Durability	100 mating cycles minimum - (full detent)	
Radial Misalignment	±0.010 minimum	
Axial Misalignment	.000/.010	
Force to Engage	full detent	15.0 lbs. maximum
	limited detent	10.0 lbs. maximum
	smooth bore	2.0 lbs. maximum
Force to Disengage	full detent	5.0 lbs. minimum
	limited detent	2.0 lbs. minimum
	smooth bore	0.5 lbs. minimum
Center Contact Retention	1.5 lbs. minimum axial force	
Environmental		
Operating Temperature	-85°F to +329°F [-65°C to +165°C]	
Vibration	per MIL-STD-202, method 204, test condition D	
Shock	per MIL-STD-202, method 213, test condition I	
Thermal Shock	per MIL-STD-202, method 107, test condition B	
Moisture Resistance megohms	per MIL-STD-202, method 106, except step 7b shall be omitted. Resistance shall be 1000 within 5 minutes after removal from humidity.	

Interface Dimensions

Jack

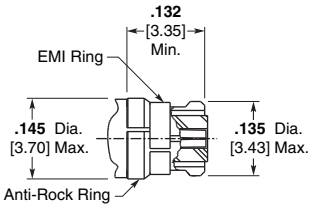

Shroud

Full Detent

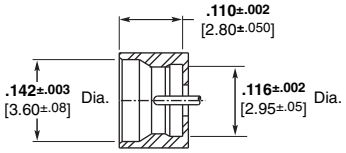

Bullet

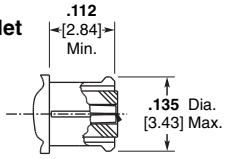

Smooth Bore

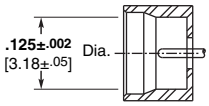

Note: These dimensions comply with MIL-STD-348.

Catalog 1308940
Revised 9-14

www.te.com

Dimensions are shown for reference purposes only. Specifications subject to change.

Dimensions are in millimeters unless otherwise specified.

USA: +1 800 522 6752
Asia Pacific: +86 0 400 820 6015
UK: +44 800 267 666

For additional support numbers please visit www.te.com

SMP Micro-Miniature Push-On Coaxial Connectors (Continued)

Jacks (Continued)

Straight Cable Jack, Solder Attachment

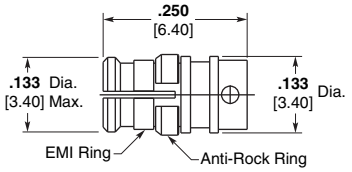

Cable	Reference Part No. (Ref. only)	Part No.	DSCC Part No.
.047 Semi-Rigid	2902-5005-62	1056521-1	94008ZCG-2
.085 Semi-Rigid (RG-405)	2902-5006-62	1056522-1	94008ZCG-1

Right-Angle Cable Jack, Solder Attachment

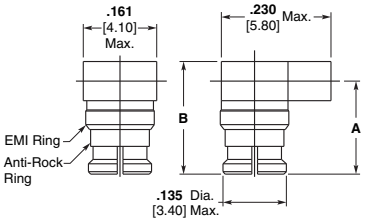

Cable	Dim. A	Dim. B	Reference Part No. (Ref. only)	Part No.	DSCC Part No.
.047 Semi-Rigid	.190 4.80	.230 5.80	2908-5006-62	1056550-1	94008ZCG-4
.085 Semi-Rigid (RG-405)	.209 5.30	.265 6.70	2908-5007-62	1056551-1	94008ZCG-3

Jack to Jack Adapter (Bullet)

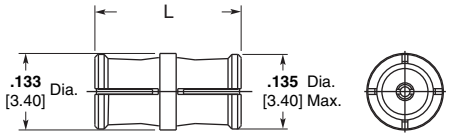

Dim. L	Reference Part No. (Ref. only)	Part No.	DSCC Part No.
.254 6.45	2980-5004-62	1056703-1	94007ZCG-1
.397 10.07	2980-5005-62	1757023-1	94007ZCG-2

Jack to Jack Adapter (SMP)

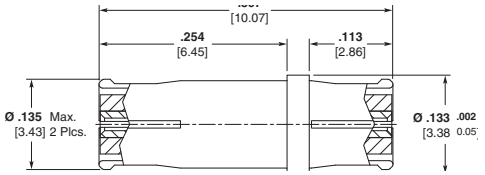

DSCC Part No.	RG/U Cable	Part No.
94007ZCG-2	—	1757023-1

Shrouds

Shroud — Threaded

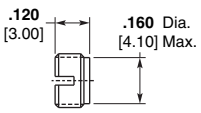

Description	Reference Part No. (Ref. only)	Part No.
Full Detent	2998-5045-02	1056745-1
Limited Detent	2998-5043-02	1056743-1
Smooth Bore	2998-5044-02	1056744-1

Shroud — 2 Hole Flange Surface Mount

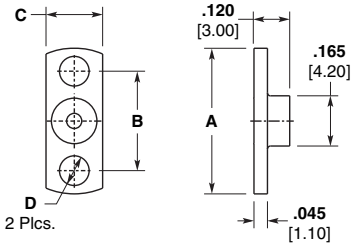

TE Part No.	Dimension A	Dimension B	Dimension C	Dimension D	Shroud Design	DSCC Part No.
1056740-1	.328 8.33	.187 4.75	.098 2.49	.480 12.19	Full Detent	94007ZSP-3
1757024-1					Limited Detent	94007ZSP-3L
1757025-1					Smooth Bore	94007ZSP-3S
1056741-1	.481 12.22	.223 5.66	.102 2.59	.625 15.88	Full Detent	94007ZSP-4
1757026-1					Limited Detent	94007ZSP-4L
1757027-1					Smooth Bore	94007ZSP-4S
1056742-1	.282 7.16	.165 4.19	.073 1.85	.400 10.16	Full Detent	94007ZSP-5
1757028-1					Limited Detent	94007ZSP-5L
1757029-1					Smooth Bore	94007ZSP-5S
1757030-1	.352 8.94	.235 5.97	.073 1.85	.470 11.94	Smooth Bore	94007ZSP-6SC

Catalog 1308940
Revised 9-14

www.te.com

Dimensions are shown for reference purposes only. Specifications subject to change.

Dimensions are in millimeters unless otherwise specified.

USA: +1 800 522 6752
Asia Pacific: +86 0 400 820 6015
UK: +44 800 267 666

For additional support numbers please visit www.te.com

SMP Micro-Miniature Push-On Coaxial Connectors (Continued)

Shrouds (Continued)

Shroud — Press Fit

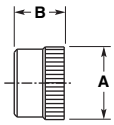

Description	Dim. A	Dim. B	Reference Part No. (Ref. only)	Part No.
Full Detent	**.182** 4.60	**.115** 2.90	2998-5005-02	1056726-1
Limited Detent	**.174** 4.40	**.120** 3.00	2998-5033-02	1056734-1
	.154 3.90	**.080** 2.00	2998-5035-02	1056736-1

Shroud — Solder-In Hermetic

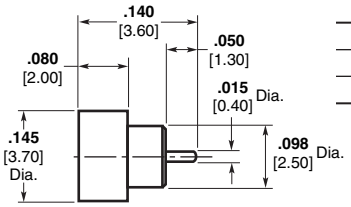

Description	Reference Part No. (Ref. only)	Part No.
Full Detent	2998-5054-94	1056750-1
Limited Detent	2998-5055-94	1056751-1
Smooth Bore	2998-5056-94	1056752-1

PCB Plug, Bulkhead Mount, Smooth Bore

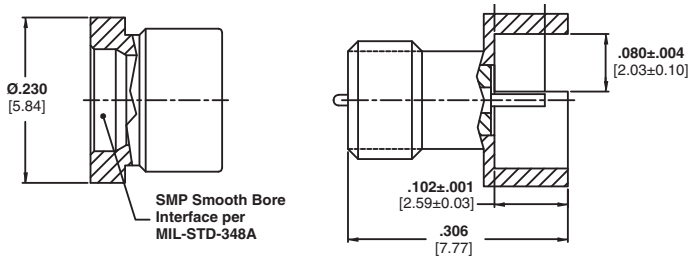

Part No.
1663678-1

PCB Thru-Hole Mount, Smooth Bore

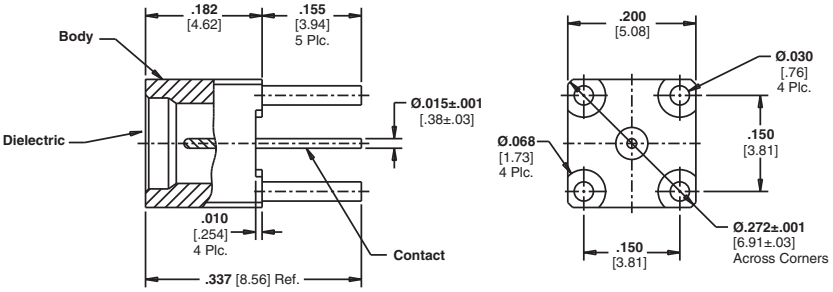

Part No.
1663679-1

Dimensions are shown for reference purposes only. Specifications subject to change.

Dimensions are in millimeters unless otherwise specified.

USA: +1 800 522 6752
Asia Pacific: +86 0 400 820 6015
UK: +44 800 267 666

For additional support numbers please visit www.te.com

SMP Micro-Miniature Push-On Coaxial Connectors (Continued)

Between Series Adapters

Between Series Coaxial Transmission Line Adapters provide convenient transitions between popular series coaxial connectors. The adapter design provides a minimum length consistent with good electrical performance. The small size, low VSWR, and broad frequency coverage permits a wide range of applications in both measurement and systems use.

SMA Plug – SMP Plug

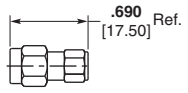

Part Number 1056706-1
Reference Part No. (Ref. only)
2981-2241-00

SMA Jack – SMP Jack

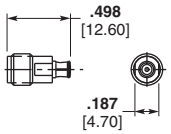

Part Number 1056702-1
Reference Part No. (Ref. only)
2980-2240-00

SMA Jack – OSMP Plug

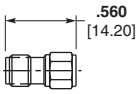

Part Number 1056707-1
Reference Part No. (Ref. only)
2982-2240-00

SMP Jack – SMA Plug

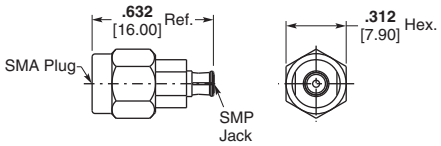

Part Number 1056708-1
Reference Part No. (Ref. only)
2982-2241-00

Miscellaneous

Glass Bead Assembly

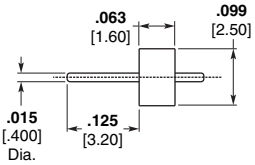

Reference Part No. (Ref. only)	Part No.
2998-5022-94	1056728-1

Plug Assembly, Thread-In with Sliding Pin

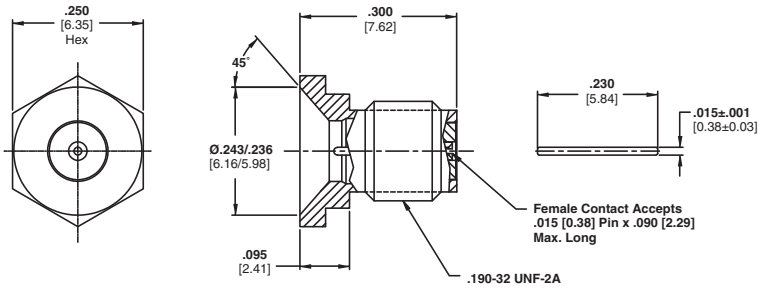

Part No.
1663670-1

Dimensions are shown for reference purposes only. Specifications subject to change.

Dimensions are in millimeters unless otherwise specified.

USA: +1 800 522 6752
Asia Pacific: +86 0 400 820 6015
UK: +44 800 267 666

For additional support numbers please visit www.te.com

OSSP Subminiature Modular Blind Mate Connectors

Features

- **Subminiature version of OSP (BMA) Blind Mate Connectors**
- **For space savings**
- **Family of connectors and adapters**

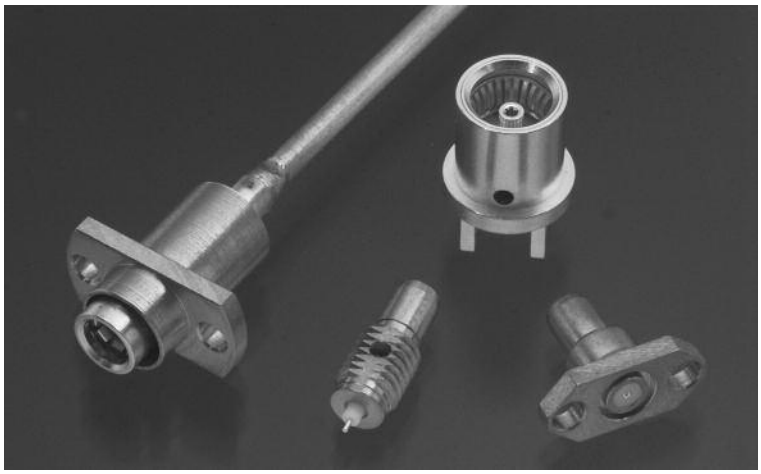

METRIC

Dimensions in this OSSP section are millimeters over inches. All other pages are inches over millimeters.

OSSP connectors are a subminiature version of the OSP (BMA) blind mate series. Connectors in this series incorporate the design elements of the OSP (BMA) interface including the float and mismate features. OSSP blind mates are about 40% smaller than OSP (BMA) connectors and are designed to be used in applications where space is at a premium.

A complete family of OSSP connectors and adapters is available including cable connectors, fixed and float mount panel connectors and hermetic connectors. Rigid mount units will function to specifications up to ±.064 [±.0025] radial misalignment with the mating plug connector. Applications requiring greater than ±.064 [±.0025] radial misalignment can use either the float design or floating connector plates with guide pins.

Engineering Data

Impedance —	50 ohms
Frequency —	dc to 28.0 GHz
Temperature Rating —	-65° to 125° C

Electrical

	RG-405 (.085) Semi-Rigid
VSWR —	1.05 + .01f (GHz)
RF Transmission Loss —	.040 x $\sqrt{f}$ (GHz)
Insulation Resistance —	5,000 megohms min.
Contact Resistance —	
Center Contact	6.0 milliohms max.
Outer Contact	3.0 milliohms max.
Outer Contact to Cable	0.5 milliohms max.
Dielectric Withstanding Voltage —	675 volts RMS
Corona Extinction Voltage at 70,000 Ft.—	250 volts min.
RF High Potential at 5 MHz —	675 volts RMS
RF Leakage Interface Only —	-(90-fGHz) dB min. (fully mated)
Power Handling —	300W at 3 GHz (sea level) and room temperature

Environmental

Corrosion —	Method 101, Condition B, MIL-STD-202
Vibration —	Method 204, Condition D, 20G's, MIL-STD-202
Shock —	Method 213, Condition I, 100G's, MIL-STD-202
Temperature Cycling —	Method 107, Condition B, MIL-STD-202
Moisture Resistance —	Method 106, MIL-STD-202

Material

Housing —	Corrosion resistant steel Type 303 (stainless) per ASTM A484 and A582
Center Contact —	Beryllium copper per ASTM-B-196
Dielectric —	TFE fluorocarbon per ASTM-D-1457
Gasket (O'Ring) —	MIL-P-25732

Mechanical

Force to Engage —	3 pounds max.
Force to Disengage —	1.5 pounds max.
Center Contact Retention —	4 pounds min.
Durablilty —	1,000 Cycles
Radial Misalignment —	
Rigid Mount	±.06 [±.0025]
Float Mount	±.51 [±.020]

Mating Characteristics

Jack Connector —		
Center Contact Socket	Oversize test Pin —	.533 + .003 [.0210 + .0001] dia.
	Test Pin Finish —	16 micro inch max.
	Insertion Depth —	.76/1.14 [.030/.045]
	Number of Insertions —	3
Insertion Force	Test Pin —	.528 + .003 [.0208 + .0001] dia.
	Test Pin Finish —	16 micro inch
	Insertion Force —	3 pounds max.
Withdrawal Force	Test Pin —	.495 + .003 [.0195 - .0001] dia.
	Test Pin Finish —	16 micro inch max.
	Insertion Depth —	1.27/1.91 [.050/.075]
	Withdrawal —	1/2 ounce min.

Finish

Center Contact —	Gold plate per MIL-G-45204, Type II, Class 0 over nickel plate per QQ-N-290, Class 2 or passivate per ASTM-A380
Housing —	Gold plate per MIL-G-45204, Type II, Class 0 over nickel plate per QQ-N-290, Class 2 or passivate per ASTM-A380

Dimensions are shown for reference purposes only. Specifications subject to change.

Dimensions are in millimeters unless otherwise specified.

USA: +1 800 522 6752
Asia Pacific: +86 0 400 820 6015
UK: +44 800 267 666

For additional support numbers please visit www.te.com

OSSP Subminiature Modular Blind Mate Connectors (Continued)

Interface Mating Dimensions

The connector interface, specifically designed for multiple interconnects, maintains reliable performance over the typical mechanical tolerance required in cost effective packaging.

The interface test data shows excellent performance is maintained with mating gaps up to .015 inch.

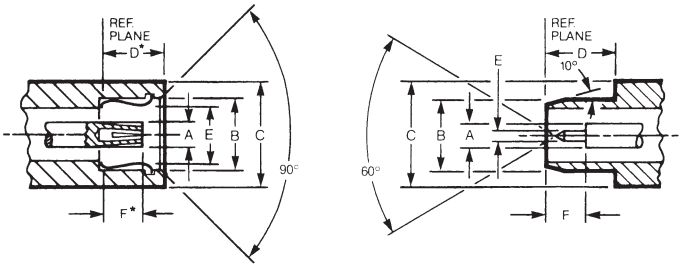

Jack Plug

Description	Dimensions					
	A	B	C	D	E	F
Jack	**1.22** 0.48 Nom.	**3.91** .154 Min.	**5.33** .210 Ref.	**5.00** .197 Nom.*	**3.35** .132 Max.	**3.23** .127 Max.*
Plug	**1.22** 0.48 Nom.	**3.56** .140 Nom.	**5.33** .210 Ref.	**5.00** .199 Min.	**0.51** .020 Nom.	**3.25** .128 Min.

*With spring bottomed.

Dimensions are shown for reference purposes only. Specifications subject to change.

Dimensions are in millimeters unless otherwise specified.

USA: +1 800 522 6752
Asia Pacific: +86 0 400 820 6015
UK: +44 800 267 666

For additional support numbers please visit www.te.com

OSSP Subminiature Modular Blind Mate Connectors (Continued)

For Semi-Rigid Cable, 2.16 [.085] Dia., Direct Solder Attachment

Bulkhead Feedthrough Cable Plug — Rear Mount

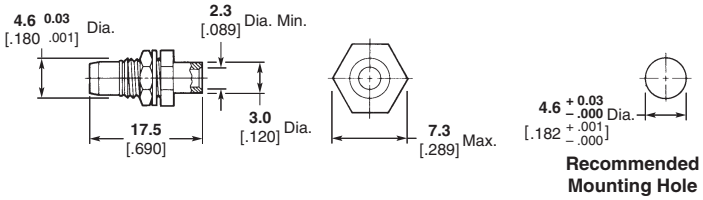

Cable	Plating	Reference Part No.	Part No.
RG-405/U, **2.16** [.085]	Gold	4703-7985-00	**1255511-1**

Flange Mount Cable Jack — Floating Rear Mount

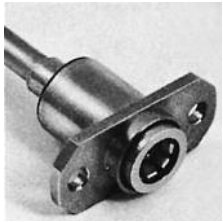

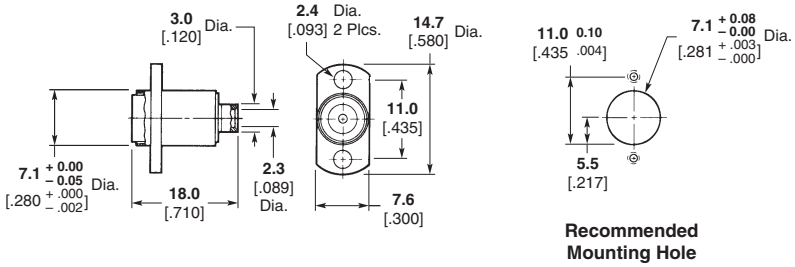

Cable	Reference Part No.	Part No.
RG-405/U, **2.16** [.085]	4706-7985-02	**1059868-1**

Finish: Inner housing that is soldered to cable is gold plated. Outer housing is passivated stainless steel.
When using semi-rigid cable, it is recommended that a service loop be used to facilitate the float features of the connector.

Feedthru Snap-In

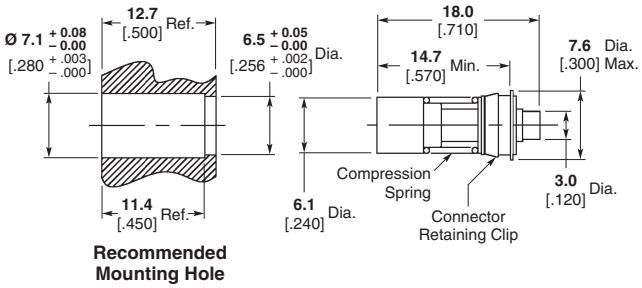

Cable	Reference Part No.	Part No.
RG-405/U, **2.16** [.085]	4710-7985-00	**1059874-1**

Catalog 1308940
Revised 9-14

www.te.com

Dimensions are shown for reference purposes only. Specifications subject to change.

Dimensions are in millimeters unless otherwise specified.

USA: +1 800 522 6752
Asia Pacific: +86 0 400 820 6015
UK: +44 800 267 666

For additional support numbers please visit www.te.com

OSSP Subminiature Modular Blind Mate Connectors (Continued)

For Flexible Cable, Crimp Attachment

Bulkhead Feedthrough Cable Plug — Rear Mount

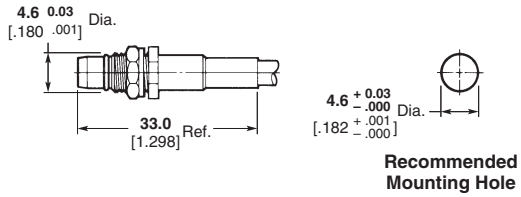

Cable	Plating	Reference Part No. (Ref. Only)	Part No.
RG-174/U, 188/U, 316U	Passivated Stainless Steel	4733-7388-02	**1059886-1**

Flange Mount Cable Jack — Floating Rear Mount

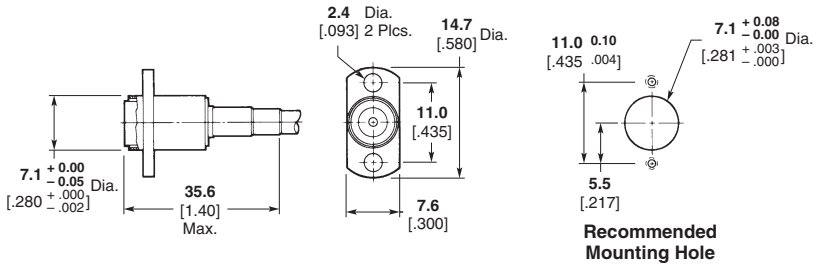

Cable	Plating	Reference Part No. (Ref. Only)	Part No.
RG-188/U, 316 Double Braided Only	Passivated Stainless Steel	4736-7316-02	**1059888-1**
RG-174/U, 188/U, 316U	Passivated Stainless Steel	4736-5001-02	**1059887-1**

Catalog 1308940
Revised 9-14

www.te.com

Dimensions are shown for reference purposes only. Specifications subject to change.

Dimensions are in millimeters unless otherwise specified.

USA: +1 800 522 6752
Asia Pacific: +86 0 400 820 6015
UK: +44 800 267 666

For additional support numbers please visit www.te.com

OSSP Subminiature Modular Blind Mate Connectors (Continued)

For Panel Mount

Straight Terminal

Threaded Installation — Panel Feedthrough Plug Receptacle

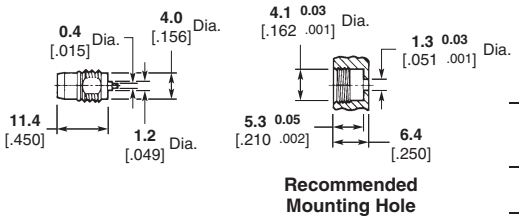

Plating	Reference Part No. (Ref. Only)	Part No.
Passivated Stainless Steel	4757-5006-02	**1059903-1**

Feedthru Snap-In Cable Jack

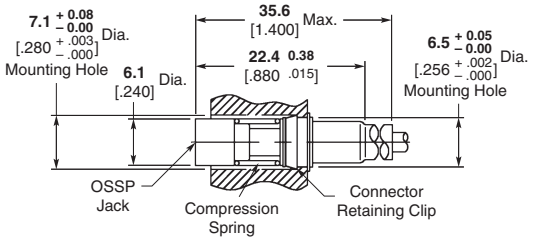

Reference Part No. (Ref. Only)	Part No.
4740-7388-00	**1059889-1**

PCB Vertical Plug

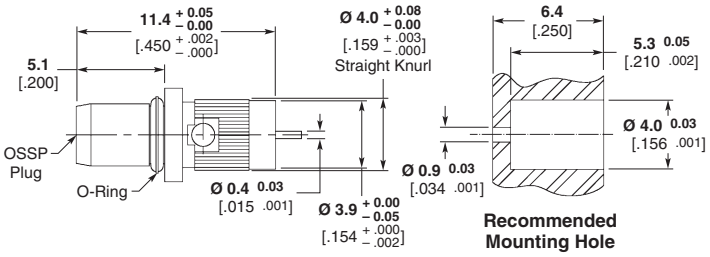

Reference Part No. (Ref. Only)	Part No.
4757-1154-02	**1059901-1**

Press-In Plug

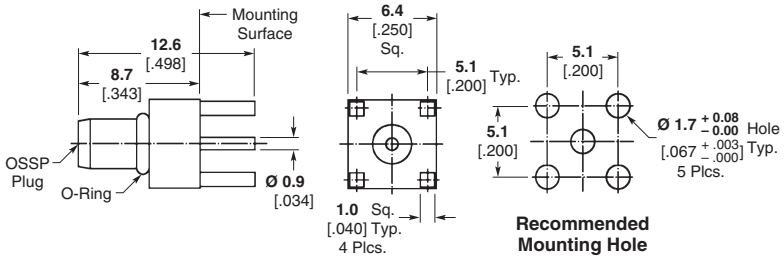

Reference Part No. (Ref. Only)	Part No.
4763-0000-00	**1059919-1**

PCB Right Angle Bulkhead Plug

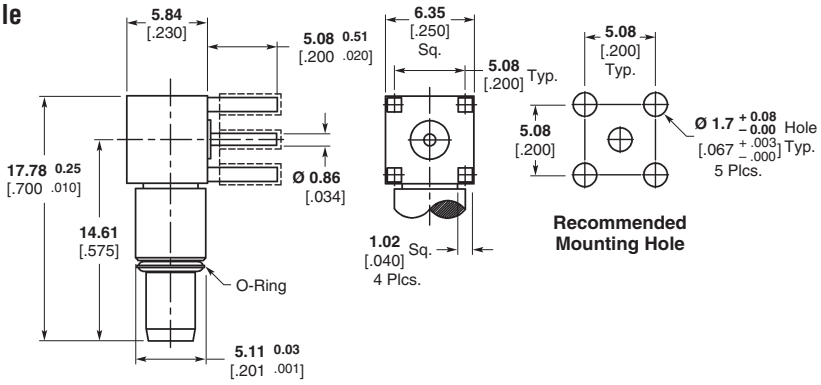

Part No.
1484546-1

Dimensions are shown for reference purposes only. Specifications subject to change.

Dimensions are in millimeters unless otherwise specified.

USA: +1 800 522 6752
Asia Pacific: +86 0 400 820 6015
UK: +44 800 267 666

For additional support numbers please visit www.te.com

OSSP Subminiature Modular Blind Mate Connectors (Continued)

Hermetically Sealed

Metal to Metal

Formable Gasket — Panel Feedthrough Plug Receptacle

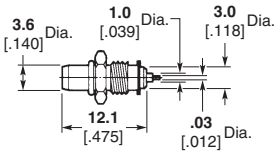

VSWR (GHz)	RF Leakage (dB)	Plating	Reference Part No. (Ref. Only)	Part No.
1.06 + .01f	–(85-fGHz)	Gold	4757-5014-00	**1059905-1**

Recommended Mounting Hole Detail A at bottom of this page.

Solder and Braze-In

Panel Feedthrough Plug Receptacle

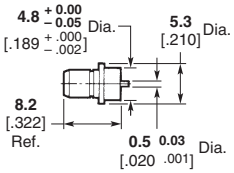

VSWR (GHz)	RF Leakage (dB)	Plating	Reference Part No. (Ref. Only)	Part No.
1.06 + .01f	–(85-fGHz)	Gold	4757-3204-00	**1059902-1**

Recommended Mounting Hole Detail B at bottom of this page.

Recommended Mounting Hole Detail for Hermetically Sealed

Detail A*

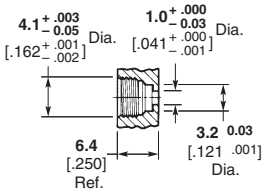

Detail B*

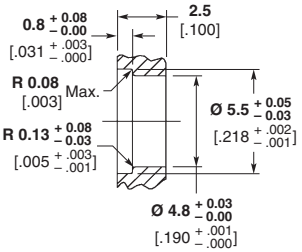

*Consult appropriate Instruction Sheet for complete mounting procedure.

Dimensions are shown for reference purposes only. Specifications subject to change.

Dimensions are in millimeters unless otherwise specified.

USA: +1 800 522 6752
Asia Pacific: +86 0 400 820 6015
UK: +44 800 267 666

For additional support numbers please visit www.te.com

OSP (BMA) Miniature Modular Blind Mate Connectors

Features

- **Interface designed for multiple interconnects**
- **For high performance microwave system requirements**
- **Bulkhead or panel mount**
- **For semi-rigid cable**

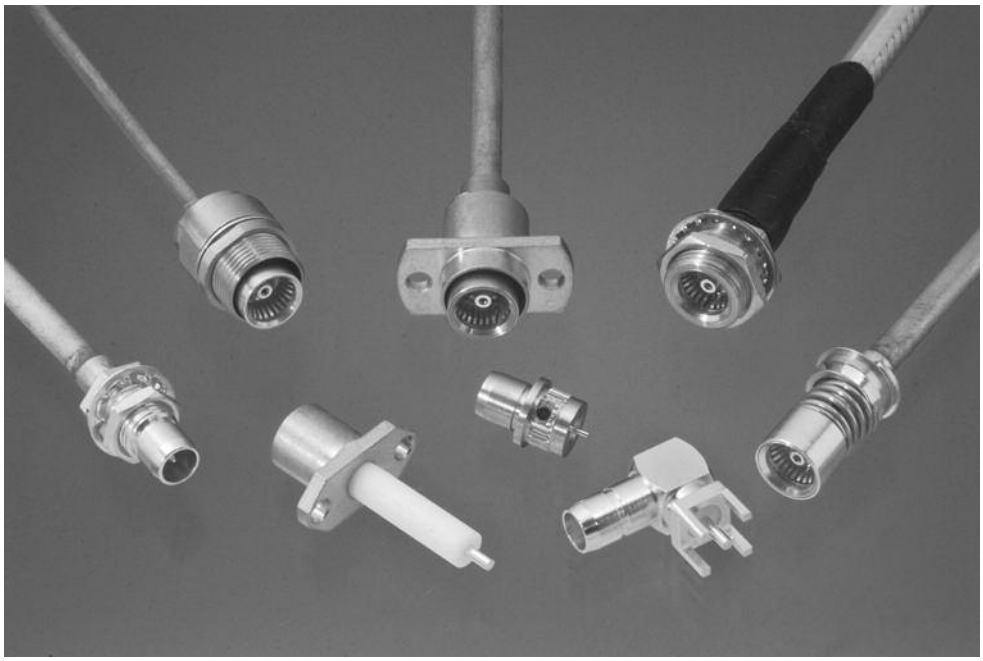

OSP (BMA) miniature connectors for semi-rigid cable meet high performance requirements for microwave multiple interconnects. Standard units are available in bulkhead or panel mount designs for either direct solder or OSCC solderless compression crimp attachment. Complete tooling for both versions is located in the Tool Section of this catalog.

Jack connectors are available in either float or rigid mount. Rigid mount units will function to specifications up to ±.10 [.004] radial misalignment with the mating plug connector. Applications requiring greater than ±.10 [.004] radial misalignment can use either the float design or floating connector plates with guide pins.

The OSCC Solderless Compression Crimp attachment meets high performance requirements for microwave system applications. The cable attachment is permanent and highly reliable.

Ease of assembly permits users unskilled in soldering techniques to rapidly produce cable assemblies with consistently excellent mechanical and electrical performance.

METRIC

Dimensions in this OSP (BMA) section are millimeters over inches. All other pages are inches over millimeters.

OSP (BMA) Miniature Modular Blind Mate Connectors (Continued)

The specifications given refer specifically to mated pair of Part Numbers 1059410-1 and 1059402-1 (RG 402) and 1059412-1 and 1059404-1 (RG 405). Specifications on other connectors are available on request.

The general electrical, mechanical and environmental specifications in the following table are recommended for procurement documents or drawings.

Engineering Data

Impedance —	50 ohms
Frequency —	dc to 22.0 GHz
Temperature Rating —	-65° to 125° C

Electrical	RG 402 (.141) Semi-Rigid	RG 405 (.085) Semi-Rigid
VSWR —		
dc - 18.0 GHz	1.02 + .005f (GHz)	1.05 + .005f (GHz)
18.0 - 22.0 GHz	1.02 + .008f (GHz)	1.05 + .009f (GHz)
RF Transmission Loss —	.03 x $\sqrt{f}$ (GHz)	.03 x $\sqrt{f}$ (GHz)
Insulation Resistance —	5,000 megohms min.	5,000 megohms min.
Contact Resistance —		
Center Contact	2.0 milliohms max.	2.0 milliohms max.
Outer Contact	2.0 milliohms max.	2.0 milliohms max.
Outer Contact to Cable	0.5 milliohms max.	0.5 milliohms max.
Dielectric Withstanding Voltage —	1500 volts RMS	1000 volts RMS
Corona Extinction Voltage at 70,000 Ft.—	375 volts min.	335 volts min.
RF High Potential at 5 MHz —	1,000 volts RMS	670 volts RMS
RF Leakage Interface Only —	-(90-fGHz) dB min. (fully mated)	-(90-fGHz) dB min. (fully mated)
Power Handling —	300W at 3 GHz (sea level) and room temperature	

Environmental

Corrosion —	Method 101, Condition B, MIL-STD-202
Vibration —	Method 204, Condition D, 20G's, MIL-STD-202
Shock —	Method 213, Condition I, 100G's, MIL-STD-202
Temperature Cycling —	Method 107, Condition B, MIL-STD-202
Moisture Resistance —	Method 106, MIL-STD-202

Material

Housing —	Corrosion resistant steel Type 303 (stainless) per ASTM A484 and A582
Center Contact —	Beryllium copper per ASTM-B-196
Dielectric —	TFE fluorocarbon per ASTM-D-1457
Gasket (O'Ring) —	MIL-P-25732

Mechanical

Force to Engage —	3 pounds max.
Force to Disengage —	1.5 pounds max.
Center Contact Retention —	6 pounds min.
Durablilty —	5,000 Cycles
Radial Misalignment —	
Rigid Mount	±.10 [±. 004]
Float Mount	±.51 [±.020]

Mating Characteristics

Jack Connector —		
Center Contact Socket	Oversize test Pin —	.945 + .003 [.0372 + .0001] dia.
	Test Pin Finish —	16 micro inch
	Insertion Depth —	.76/1.14 [.030/.045]
	Number of Insertions —	3
Insertion Force	Test Pin —	.940 + .003 [.0370 + .0001] dia.
	Test Pin Finish —	16 micro inch
	Insertion Depth —	1.27/1.91 [.050/.075]
	Insertion Force —	3 pounds max.
Withdrawal Force	Test Pin —	.90 + .003 [.0355 - .0001] dia.
	Test Pin Finish —	16 micro inch
	Insertion Depth —	1.27/1.91 [.050/.075]
	Withdrawal —	1 ounce min.

Finish

Center Contact —	Gold plate per MIL-G-45204, Type II, Class 1 over copper plate per MIL-C-14550
Housing —	Gold plate per MIL-G-45204, Typ II, Class 0 over nickel plate per QQ-N-290, Class 2 or passivate per ASTM-A380

All dimensions shown are nominal. Contact the factory for specific tolerances.

OSP (BMA) Miniature Modular Blind Mate Connectors (Continued)

Interface Mating Dimensions

The connector interface, specifically designed for multiple interconnects, maintains reliable performance over the typical mechanical tolerance required in cost effective packaging.

The interface test data shows excellent performance is maintained with mating gaps up to 0.38 [.015].

Meets MIL-STD-348 Figure 321. Intermateable to BMA Connectors.

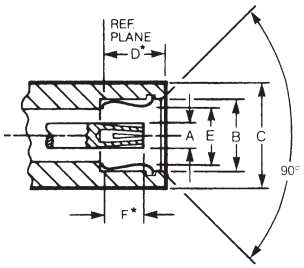

Jack

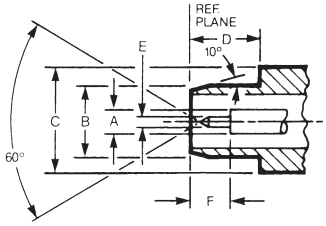

Plug

Letter	Dimensions
A	**1.78** .070 Nom.
B	**5.72** .225 Min.
C	**7.62** .300 Ref.
D	**5.00** .197 Nom.*
E	**5.08** .200 Max.
F	**3.23** .127 Max.*

*With spring bottomed

Letter	Dimensions
A	**1.78** .070 Nom.
B	**5.33** .210 Nom.
C	**7.62** .300 Ref.
D	**5.05** .199 Min.
E	**0.91** .036 Nom.
F	**3.25** .128 Min.

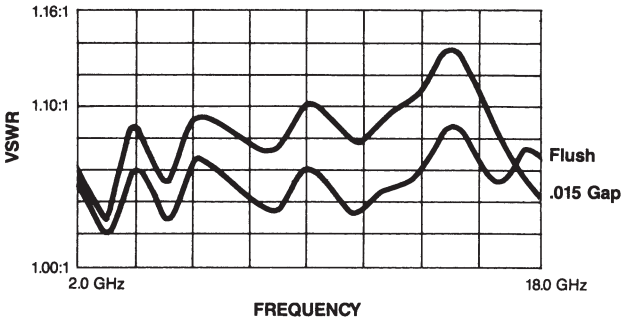

Dimensions are shown for reference purposes only. Specifications subject to change.

Dimensions are in millimeters unless otherwise specified.

USA: +1 800 522 6752
Asia Pacific: +86 0 400 820 6015
UK: +44 800 267 666

For additional support numbers please visit www.te.com

OSP (BMA) Miniature Modular Blind Mate Connectors (Continued)

For Semi-Rigid Cable, 2.16 [.085] and 3.58 [.141] Dia., Direct Solder Attachment

Bulkhead Feedthrough Cable Plug Rear Mount

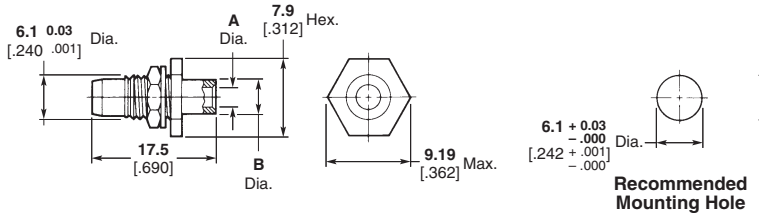

Cable	Plating	Dimensions A	Dimensions B	Reference Part No. (Ref. Only)	Part No.
RG-402/U **3.58** .141	Gold	**3.7** .144	**4.6** .180	4503-7941-00	**1059402-1**
RG-405/U **2.16** .085	Gold	**2.3** .089	**3.0** .120	4503-7985-00	**1059404-1***

*Non-SCD.

Bulkhead Feedthrough Cable Jack Rigid Rear Mount

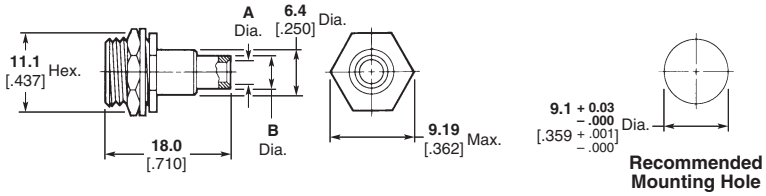

Cable	Plating	Dimensions A	Dimensions B	Reference Part No. (Ref. Only)	Part No.
RG-402/U **3.58** .141	Gold	**3.7** .144	**4.6** .180	4504-7941-00	**1059410-1**
RG-405/U **2.16** .085	Gold	**2.3** .089	**3.0** .120	4504-7985-00	**1059412-1**

Flange Mount Cable Jack Floating Rear Mount

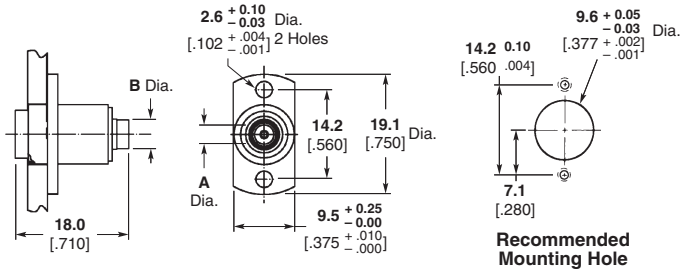

Cable	Dimensions A	Dimensions B	Reference Part No. (Ref. Only)	Part No.
RG-402/U **3.58** .141	**3.7** .144	**4.6** .180	4506-7941-02	**1059453-1**
RG-405/U **2.16** .085	**2.3** .089	**3.0** .120	4506-7985-02	**1059456-1**

Finish: Inner housing that is soldered to cable is gold plated. Outer housing is passivated stainless steel.

When using semi-rigid cable, it is recommended that a service loop be used to facilitate the float features of the connector.

Dimensions are shown for reference purposes only. Specifications subject to change.

Dimensions are in millimeters unless otherwise specified.

USA: +1 800 522 6752
Asia Pacific: +86 0 400 820 6015
UK: +44 800 267 666

For additional support numbers please visit www.te.com

OSP (BMA) Miniature Modular Blind Mate Connectors (Continued)

For Semi-Rigid Cable, 2.16 [.085] and 3.58 [.141] Dia., Direct Solder Attachment (Continued)

Low Profile – Bulkhead Feedthrough Cable Jack – Floating Rear Mount

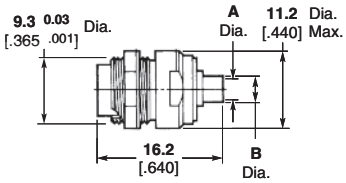

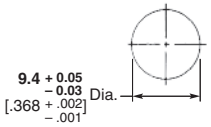

Recommended Mounting Hole

Cable	Plating	Dimensions A	Dimensions B	Reference Part No. (Ref. Only)	Part No.
RG-402/U **3.58** .141	Gold	**3.7** .144	**4.6** .180	4522-7941-02	**1059505-1**
RG-405/U **2.16** .085	Gold	**2.3** .089	**3.0** .120	4522-7985-02	**1059506-1**

When using semi-rigid cable, it is recommended that a service loop be used to facilitate the float features of the connector.

Low Profile – Panel Feedthrough Cable Jack – Floating Rear Mount

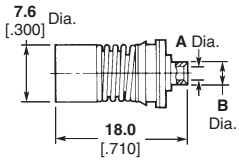

Cable	Plating	Dimensions A	Dimensions B	Reference Part No. (Ref. Only)	Part No.
RG-402/U **3.58** .141	Gold	**3.7** .144	**4.6** .180	4510-7941-00	**1059465-1**
RG-405/U **2.16** .085	Gold	**2.3** .089	**3.0** .120	4510-7985-00	**1059467-1**

Recommended removal tool part number 1059774-1 is described in Tool Section.
When using semi-rigid cable, it is recommended that a service loop be used to facilitate the float features of the connector.

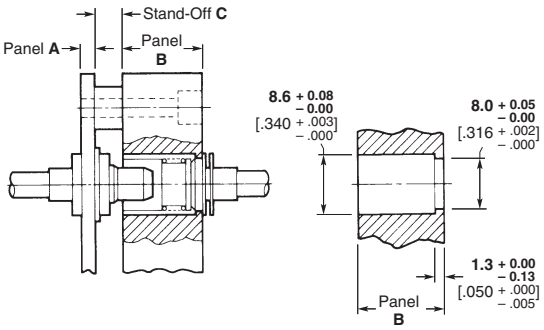

Recommended Mounting Detail

Panel A ±.003	Panel B ±.003	Stand-Off Panel C +.050/–.000
2.3 .090	**9.5** .375	**7.2** .285
2.3 .090	**11.1** .438	**5.6** .222
2.3 .090	**12.7** .500	**4.1** .160
3.2 .125	**9.5** .375	**6.4** .250
3.2 .125	**11.1** .438	**4.7** .187
3.2 .125	**12.7** .500	**3.2** .125

OSP (BMA) Miniature Modular Blind Mate Connectors (Continued)

For Semi-Rigid Cable, 2.16 [.085] and 3.58 [.141] Dia., OSCC Solderless Compression Crimp Attachment

Bulkhead Feedthrough Cable Plug Fixed Rear Mount

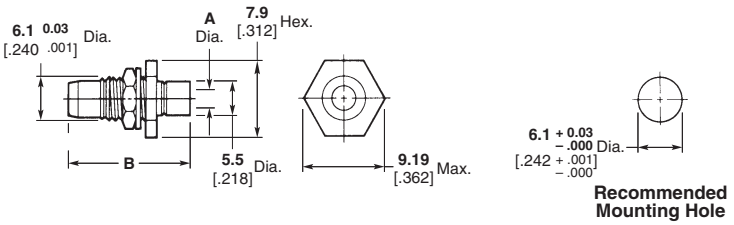

Cable	Plating	Dim. A	Dim. B Before Crimping	Dim. B After Crimping	Reference Part No. (Ref. Only)	Part No.
RG-405/U **2.16** .085	Passivated Stainless Steel	**2.2** .088	**19.8** .782	**17.2** .677	4503-7685-02	**1059399-1**

Outline drawing shows after crimp dimensions.

Bulkhead Feedthrough Cable Jack Fixed Rear Mount

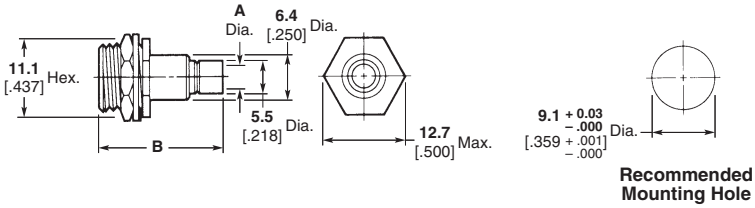

Cable	Plating	Dim. A	Dim. B Before Crimping	Dim. B After Crimping	Reference Part No. (Ref. Only)	Part No.
RG-402/U **3.58** .141	Passivated Stainless Steel	**3.6** .143	**21.1** .830	**18.2** .715	4504-7641-02	**1059408-1**

Outline drawing shows after crimp dimensions.

Flange Mount Cable Jack Floating Rear Mount

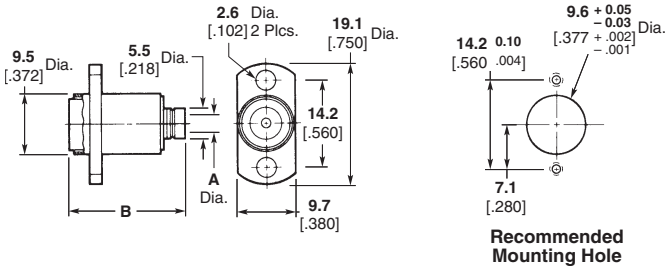

Cable	Plating	Dim. A	Dim. B Before Crimping	Dim. B After Crimping	Reference Part No. (Ref. Only)	Part No.
RG-402/U **3.58** .141	Passivated Stainless Steel	**3.6** .143	**22.6** .891	**19.8** .780	4506-7641-02	**1059451-1**
RG-405/U **2.16** .085	Passivated Stainless Steel	**2.2** .088	**22.6** .891	**19.8** .780	4506-7685-02	**1059452-1**

Outline drawing shows after crimp dimensions.
When using semi-rigid cable, it is recommended that a service loop be used to facilitate the float features of the connector.

Dimensions are shown for reference purposes only. Specifications subject to change.

Dimensions are in millimeters unless otherwise specified.

USA: +1 800 522 6752
Asia Pacific: +86 0 400 820 6015
UK: +44 800 267 666

For additional support numbers please visit www.te.com

OSP (BMA) Miniature Modular Blind Mate Connectors (Continued)

For Flexible Cable, Crimp Attachment

Bulkhead Feedthrough Cable Plug Rear Mount

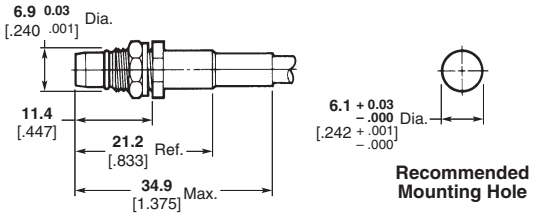

Cable	Plating	Reference Part No. (Ref. Only)	Part No.
RG-174/U, 179, 187, 188, 316	Passivated Stainless Steel	4533-7388-02	**1059523-1**

Flange Mount Cable Jack Floating Rear Mount

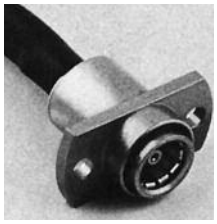

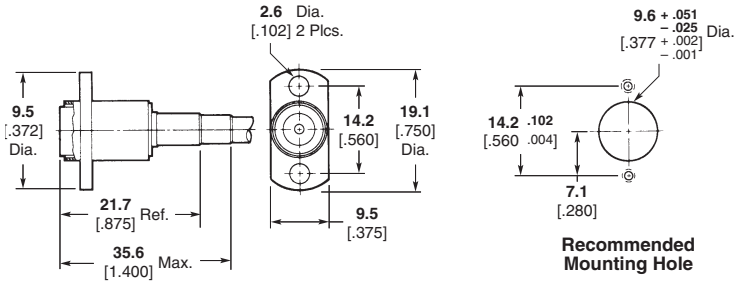

Cable	Plating	Reference Part No. (Ref. Only)	Part No.
RG-55/U, 142, 223, 400	Passivated Stainless Steel	4536-7341-02	**1059540-1**
RG-174/U, 179, 187, 188, 316	Passivated Stainless Steel	4536-7388-02	**1059541-1**
RG-178, Double Braid	Passivated Stainless Steel	4536-5014-02	**1058572-1**

Low Profile – Panel Feedthrough Cable Jack – Rear Mount

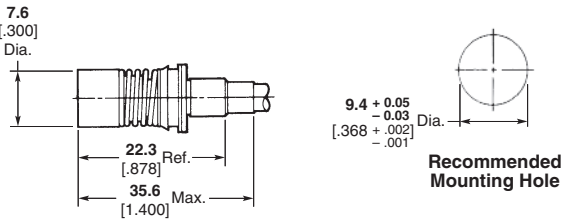

Cable	Plating	Reference Part No. (Ref. Only)	Part No.
RG-174/U, 179, 187, 188, 316	Passivated Stainless Steel	4540-7388-02	**1059551-1**

Refer to Recommended Mounting Hole Detail for Semi-Rigid Cable Low Profile Feedthrough Cable Jack.
Recommended removal tool part number 1059774-1 is described in Tool Section.

Dimensions are shown for reference purposes only. Specifications subject to change.

Dimensions are in millimeters unless otherwise specified.

USA: +1 800 522 6752
Asia Pacific: +86 0 400 820 6015
UK: +44 800 267 666

For additional support numbers please visit www.te.com

OSP (BMA) Miniature Modular Blind Mate Connectors (Continued)

Panel Mount

Straight Terminal

2-Hole Flange Mount Plug Receptacle

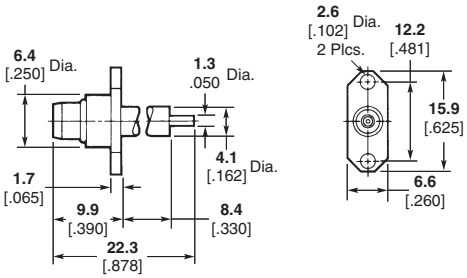

Plating	Reference Part No. (Ref. Only)	Part No.
Passivated Stainless Steel	4551-1352-02	**1049678-1**

2-Hole Flange Mount Jack Receptacle

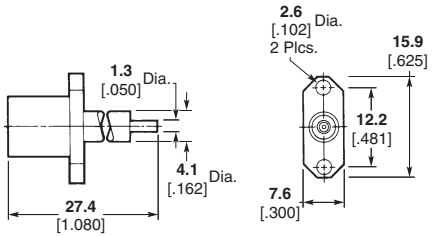

Plating	Reference Part No. (Ref. Only)	Part No.
Passivated Stainless Steel	4552-1352-02	**1059596-1**

4-Hole Flange Mount Plug Receptacle

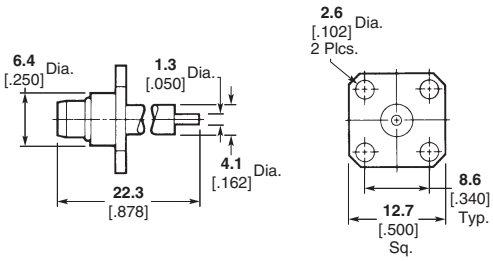

Plating	Reference Part No. (Ref. Only)	Part No.
Passivated Stainless Steel	4551-1201-02	**1329846-1**

Dimensions are shown for reference purposes only. Specifications subject to change.

Dimensions are in millimeters unless otherwise specified.

USA: +1 800 522 6752
Asia Pacific: +86 0 400 820 6015
UK: +44 800 267 666

For additional support numbers please visit www.te.com

OSP (BMA) Miniature Modular Blind Mate Connectors (Continued)

Panel Mount (Continued)

Straight Terminal

Threaded Installation – Panel Feedthrough Plug Receptacle

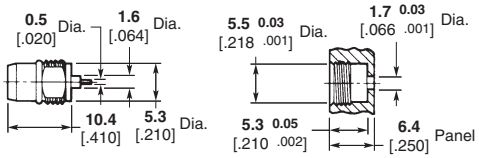

Recommended Mounting Hole

Plating	Reference Part No. (Ref. Only)	Part No.
Passivated Stainless Steel	4557-5009-02	**1059617-1**

Threaded Installation – Panel Feedthrough Jack Receptacle

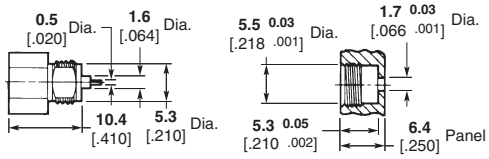

Recommended Mounting Hole

Plating	Reference Part No. (Ref. Only)	Part No.
Passivated Stainless Steel	4558-5009-02	**1059657-1**

Press Fit Installation – Panel Feedthrough Plug Receptacle

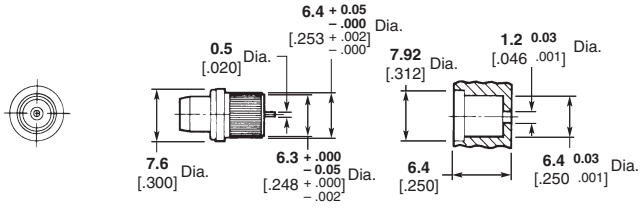

Recommended Mounting Hole

Plating	Reference Part No. (Ref. Only)	Part No.
Passivated Stainless Steel	4557-5368-02	**1059651-1**

Press Fit Installation – Panel Feedthrough Jack Receptacle

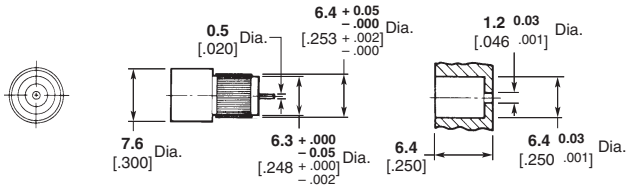

Recommended Mounting Hole

Plating	Reference Part No. (Ref. Only)	Part No.
Passivated Stainless Steel	4558-1154-02	**1059654-1**

Dimensions are shown for reference purposes only. Specifications subject to change.

Dimensions are in millimeters unless otherwise specified.

USA: +1 800 522 6752
Asia Pacific: +86 0 400 820 6015
UK: +44 800 267 666

For additional support numbers please visit www.te.com

OSP (BMA) Miniature Modular Blind Mate Connectors (Continued)

Panel Mount (Continued)

Straight Terminal Printed Circuit Board

Straight Plug Receptacle – Captured Contact

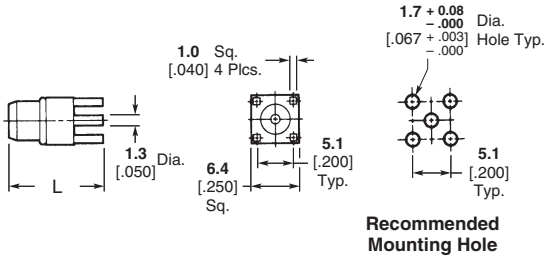

Plating	Reference Part No. (Ref. Only)	Part No.	Dim. L
Gold	4563-0000-00	**1059684-1**	**12.7** .500
Gold	—	**1663572-1**	**21.9** .862

Straight Jack Receptacle – Captured Contact

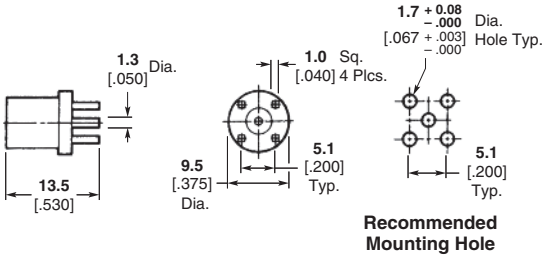

Plating	Reference Part No. (Ref. Only)	Part No.
Gold	4562-0000-00	**1059681-1**

Right Angle Plug Receptacle – Captured Contact

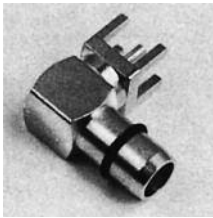

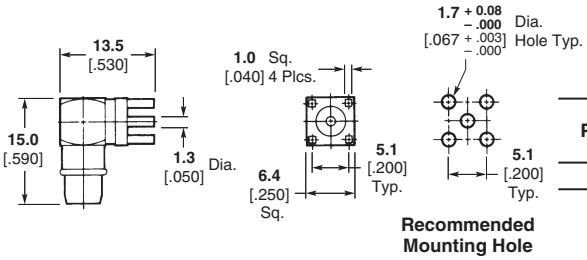

Plating	Reference Part No. (Ref. Only)	Part No.
Gold	4565-0000-00	**1059691-1**

Dimensions are shown for reference purposes only. Specifications subject to change.

Dimensions are in millimeters unless otherwise specified.

USA: +1 800 522 6752
Asia Pacific: +86 0 400 820 6015
UK: +44 800 267 666

For additional support numbers please visit www.te.com

OSP (BMA) Miniature Modular Blind Mate Connectors (Continued)

Hermetically Sealed

Metal-To-Metal

Rigid Gasket Seal – Panel Feedthrough Plug Receptacle

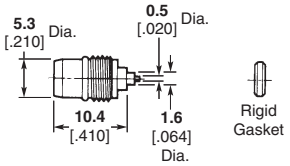

VSWR (GHz)	RF Leakage (dB)	Plating	Reference Part No. (Ref. Only)	Part No.
1.04 + .009f	–(90-fGHz)	Passivated stainless steel	4557-5119-02	**1059632-1**

Installation Thermal Limit: 250°C.
Recommended Mounting Hole Detail A follows, page 2-64.

Rigid Gasket Seal – Panel Feedthrough Jack Receptacle

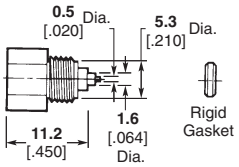

VSWR (GHz)	RF Leakage (dB)	Plating	Reference Part No. (Ref. Only)	Part No.
1.04 + .009f	–(90-fGHz)	Passivated stainless steel	4558-5119-02	**1059665-1**

Installation Thermal Limit: 250°C.
Recommended Mounting Hole Detail A follows, page 2-64.

Field Replaceable Solder and Braze-In

Panel Feedthrough Plug Receptacle

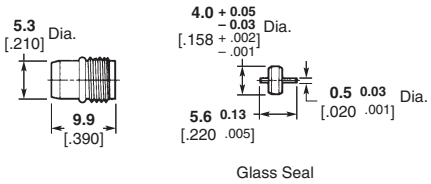

VSWR (GHz)	RF Leakage (dB)	Plating	Reference Part No. (Ref. Only)	Part No.
1.06 + .01f	–(90-fGHz)	Passivated stainless steel	4557-5329-02	**1059637-1**

Recommended Mounting Detail B or E follows, page 2-64.

Catalog 1308940
Revised 9-14

www.te.com

Dimensions are shown for reference purposes only. Specifications subject to change.

Dimensions are in millimeters unless otherwise specified.

USA: +1 800 522 6752
Asia Pacific: +86 0 400 820 6015
UK: +44 800 267 666

For additional support numbers please visit www.te.com

OSP (BMA) Miniature Modular Blind Mate Connectors (Continued)

Hermetically Sealed
(Continued)

2-Hole Flange Mount Plug Receptacle With EMI/RFI Gasket – 0.5 [.018] Dia. Contact

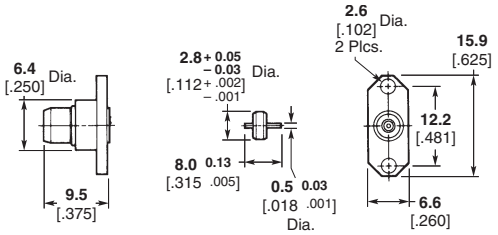

VSWR (GHz)	RF Leakage (dB)	Plating	Reference Part No. (Ref. Only)	Part No.
1.06 + .01f	–(90-fGHz)	Passivated stainless steel	4551-3357-02	**1059572-1**

Recommended Mounting Detail D follows at bottom of this page.

Recommended Mounting Hole Detail

Detail A*

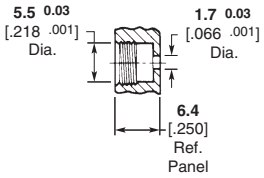

Detail B* (6.35 [.250] Panel Thickness)

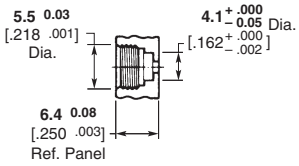

Detail C*

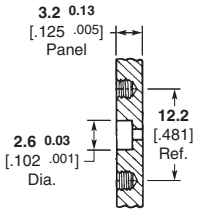

Detail D*

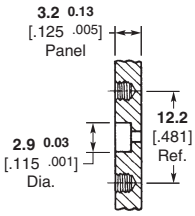

Detail E*

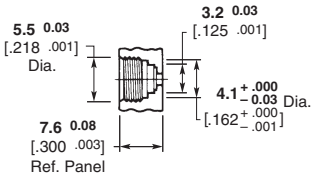

*Consult appropriate Instruction Sheet for complete mounting details.

Dimensions are shown for reference purposes only. Specifications subject to change.

Dimensions are in millimeters unless otherwise specified.

USA: +1 800 522 6752
Asia Pacific: +86 0 400 820 6015
UK: +44 800 267 666

For additional support numbers please visit www.te.com

OSMM Microminiature Connectors

Introduction

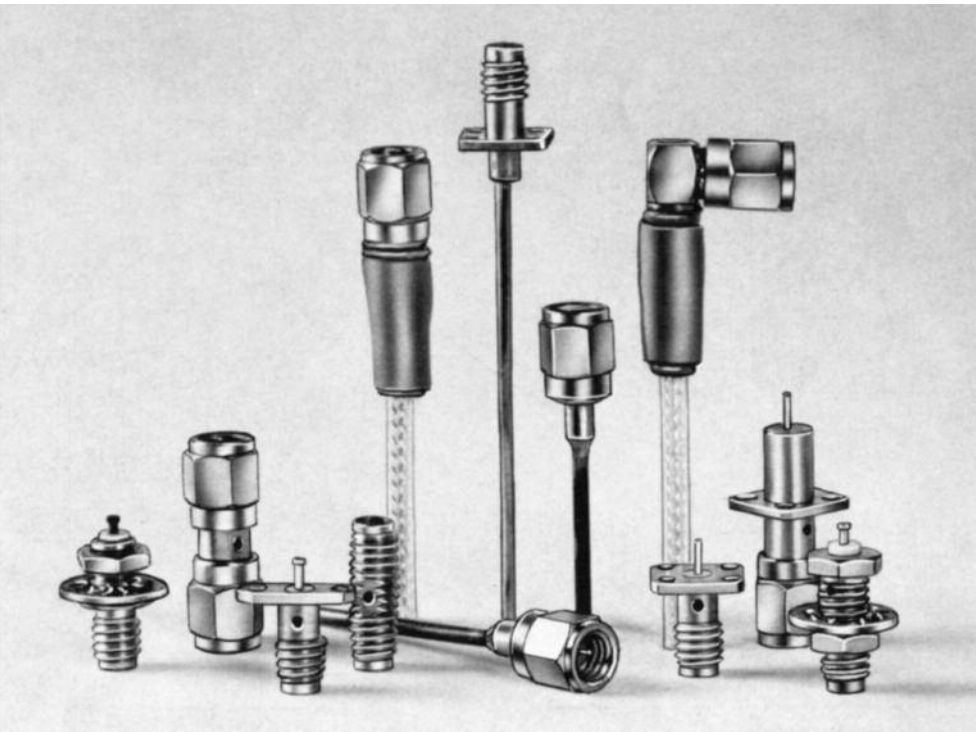

The microminiature series has been developed to meet the increasing demand for smaller connector size. This series is small, but still very rugged for its relative size.

The interface mating design insures precise outer shell alignment before engagement of the inner contacts. The OSMM Series is compatible with smaller diameter semi-rigid cable.

Design and Construction

All shell and body parts are made of stainless steel for ruggedness and long life. The dielectric is PTFE fluorocarbon. The center contacts are made of beryllium copper, gold plated. The coupling thread is .138-40 UNF thread.

Types

The OSMM Series connectors are available for appropriate size semi-rigid and flexible coaxial cables. Panel and bulkhead mount are also available to provide complete flexibility to component and system design.

Application

Typical applications include requirements from low RF to high microwave frequencies. The higher order moding for this series is above 45.0 GHz, but the primary feature is the microminiature size.

Catalog 1308940
Revised 9-14

www.te.com

Dimensions are shown for reference purposes only. Specifications subject to change.

Dimensions are in millimeters unless otherwise specified.

USA: +1 800 522 6752
Asia Pacific: +86 0 400 820 6015
UK: +44 800 267 666

For additional support numbers please visit www.te.com

OSMM Microminiature Connectors (Continued)

Interface Mating Dimensions

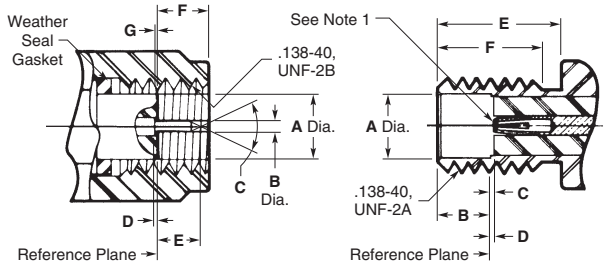

Plug

Dim.	Min.	Max.
A	**.0930** 2.36	**.0946** 2.43
B	**.0150** 0.38	**.0163** 0.42
C	60°	90°
D	**.000** 0.00	**.010** 0.25
E	**.055** 1.40	**.070** 1.78
F	**.065** 1.65	**.099** 2.29
G	**.000** 0.00	**.010** 0.25

Jack

Dim.	Min.	Max.
A	**.096** 2.44	**.097** 2.46
B	**.076** 1.98	**.082** 2.08
C	**.000** 0.00	**.010** 0.25
D	**.000** 0.00	**.010** 0.25
E	**.175** 4.45	—
F	**.140** 3.56	—

1. ID to meet VSWR and contact resistance when mated with .0155 +.0008/-.0005 [0.0394 +.0203/-.0127] dia. pin.
2. When fully engaged, the two reference planes must coincide with metal to metal contact.

Specifications

Requirement	MIL-C-39012 Applicable Paragraph	Detail
General		
Material	3.3	Steel corrosion resistant per ASTM-A-582 and ASTM-A-484, Type 303. Beryllium copper per ASTM B 196. PTFE Fluorocarbon per ASTM-D-1457.
Finish which	3.31	Center contacts shall be gold plated to a min. thickness of .00005 [0.0013] in accordance with MIL-G-45204, Typ I, Grade C. All other metal parts shall be finished as to provide a connector meets the corrosion requirements.
Design	3.4	The design shall be such that the outline shown in this catalog and the interface dimensions of MIL-STD-348A are met.
Electrical		
Insulation Resistance	3.11	The insulation resistance shall not be less than 5,000 megohms.
Corona Level	3.22	The connector shall not exhibit breakdown when the voltage is 150 volts rms at 70,000 ft.
Dielectric Withstanding Voltage	3.17	The magnitude of the test voltage shall be 500 volts rms at sea level.
RF HIgh Potential	3.23	The withstanding voltage is 375 volts rms at 5 MHz. Leakage current is not applicable.
Contact Resistance	3.16	Center contact resistance: 3.5 milliohms max. Outer contact resistance: 2.8 milliohms max.
VSWR	3.14	No military slash sheet applies. Consult factory. Frequency range dependent on cable used.
RF Leakage	3.26	No military slash sheet applies. Consult factory.
Insertion Loss	3.27	No military slash sheet applies. Consult factory. Frequency range dependent on cable used.
Mechanical		
Force to Engage	3.5.1	The torque required to engage and disengage shall not exceed 1 in.-lbs. The longitudinal force is not applicable.
Coupling Nut Retention	3.25	40 lbs. min. Applicable for plug connectors only.
Coupling Proof Torque	3.6	4 in.-lbs. min. Applicable for plug connectors only.
Cable Retention	3.24	No military slash sheet applies. Consult factory.
Mating Characteristics	3.7	Applicable to jack connectors only. Oversize pin .0165 [0.419] min. dia., .045 [1.14] deep; insertion force 3 lbs. max. with .0163 [0.414] min. dia. pin; withdrawal force 0.5 oz. min. with .015 [0.38] max. dia. pin.
Connector Durability	3.15	The connector to be tested and its mating connector shall be subjected to 500 insertion and withdrawal cycles at 12 cycles per minute max. The connector shall show no evidence of mechanical failure and shall meet the mating characteristic requirements.
Recommended Mating Torque	—	2 in.-lbs.
Environmental		
Vibration	3.18	Specification MIL-STD-202, method 204, test condition D.
Shock	3.19	Specification MIL-STD-202, method 213, test condition I.
Thermal Shock	3.20	No military slash sheet applies. Consult factory.
Corrosion (Salt Spray)	3.13	Specification MIL-STD-202, method 101, test condition B.
Moisture Resistance	3.21	Specification MIL-STD-202, method 106. No measurements at high humidity. Insulation resistance shall be at least 200 megohms within 5 minutes of removal from humidity.

Catalog 1308940
Revised 9-14

www.te.com

Dimensions are shown for reference purposes only. Specifications subject to change.

Dimensions are in millimeters unless otherwise specified.

USA: +1 800 522 6752
Asia Pacific: +86 0 400 820 6015
UK: +44 800 267 666

For additional support numbers please visit www.te.com

OSMM Microminiature Connectors (Continued)

For Flexible and Semi-Rigid Cables

Straight Cable Plug

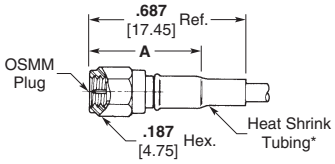

Cable	Attachment	Dim. A	Reference Part No. (Ref. only)	Part Number
RG 196/U Flexible	Crimp	.450 11.40 Ref.	4031-7196-00	1059057-1
.047 Dia.* Semi-Rigid	Direct Solder	.360 9.20 Ref.	4001-7947-00	1058955-1

* Semi-rigid versions do not use heat shrink tubing.
Finish: Gold plate.

Straight Cable Jack

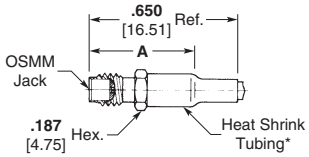

Cable	Attachment	Dim. A	Reference Part No. (Ref. only)	Part Number
.047 Dia.* Semi-Rigid	Direct Solder	.330 8.40 Ref.	4002-7947-00	—

* Semi-rigid versions do not use heat shrink tubing.
Finish: Gold plate.

Bulkhead Feedthrough Cable Jack

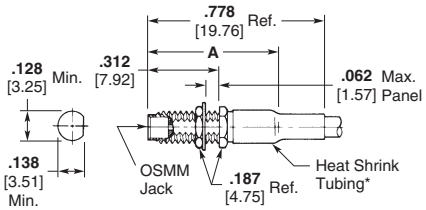

Cable	Attachment	Dim. A	Reference Part No. (Ref. only)	Part Number
RG 196/U Flexible	Crimp	.565 14.40 Ref.	4034-7196-00	1059060-1
.047 Dia.* Semi-Rigid	Direct Solder	.458 11.60 Ref.	4004-7947-00	1058990-1

* Semi-rigid versions do not use heat shrink tubing.
Finish: Gold plate.

Right-Angle Cable Plug

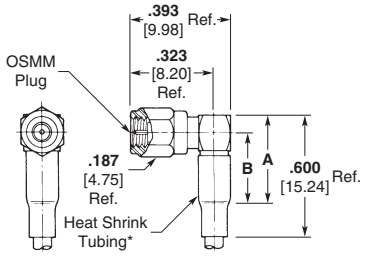

Cable	Attachment	Dim. A	Dim. B	Reference Part No. (Ref. only)	Part Number
.047 Dia.* Semi-Rigid	Direct Solder	.256 6.50 Ref.	.178 4.50 Ref.	4007-7947-00	1058993-1

* Semi-rigid versions do not use heat shrink tubing.
Finish: Gold plate.

Bulkhead Feedthrough Jack

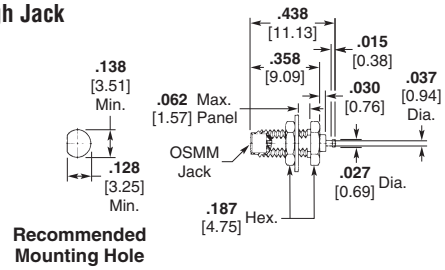

Description	Reference Part No. (Ref. only)	Part Number
Captured Center Contact* Turret Terminal Rear Mount	4056-0000-00	—

* Contact captivation per U.S. patent number 3,292,117.
Finish: Gold plate.

Printed Circuit Board Straight Jack

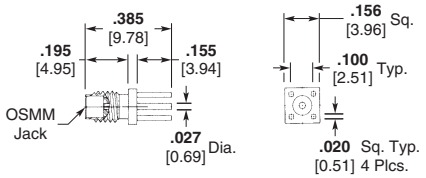

Description	Reference Part No. (Ref. only)	Part Number
Captured Center Contact* Straight Terminal	4062-0000-00	1059081-1

* Contact captivation per U.S. patent number 3,292,117.
Finish: Gold plate.

Catalog 1308940
Revised 9-14

www.te.com

Dimensions are shown for reference purposes only. Specifications subject to change.

Dimensions are in millimeters unless otherwise specified.

USA: +1 800 522 6752
Asia Pacific: +86 0 400 820 6015
UK: +44 800 267 666

For additional support numbers please visit www.te.com

SSMA Subminiature Coaxial Connectors

Introduction

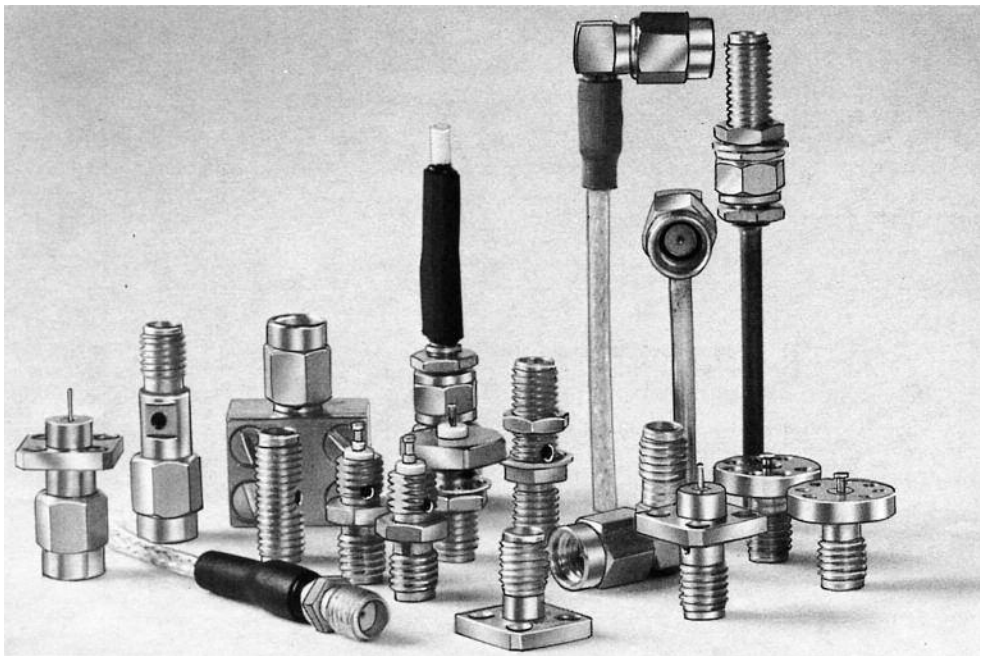

The success of the SMA connector created a need for a smaller version for reduced packaging requirements. The SSMA series was designed to a size compatible with smaller diameter semi-rigid cable. The coupling thread is 10-36 UNS thread.

Design and Construction

As with the SMA series, all shell and body parts are made of stainless steel for ruggedness and long life. The dielectric is solid PTFE fluorocarbon. The center contacts are made of beryllium copper, gold plated.

Types

SSMA connectors are available for both semi-rigid and flexible coaxial cable. Panel and bulkhead mount, strip transmission line type, microstrip transmission type and hermetically sealed connectors and in-series adapters give designers complete flexibility for component and system design.

Upper Operating Frequency Limits

The standard SSMA series allows operation to 38.0 GHz. The extended frequency SSMA series allows high order mode free operation beyond 40.0 GHz. The extended frequency series directly mates with the standard SSMA series with minimum discontinuity.

Catalog 1308940
Revised 9-14

www.te.com

Dimensions are shown for reference purposes only. Specifications subject to change.

Dimensions are in millimeters unless otherwise specified.

USA: +1 800 522 6752
Asia Pacific: +86 0 400 820 6015
UK: +44 800 267 666

For additional support numbers please visit www.te.com

SSMA Subminiature Coaxial Connectors (Continued)

Interface Mating Dimensions

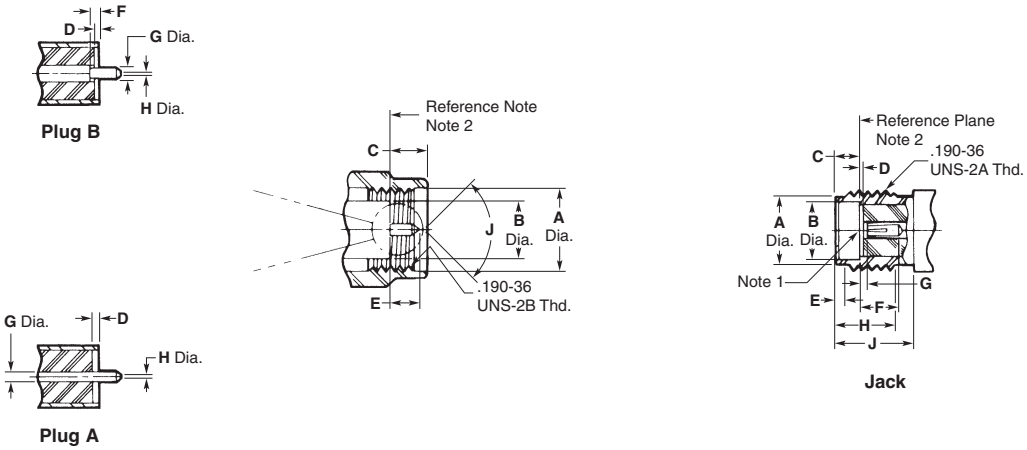

Plug

Dim.	Min.	Max.
A	**.196** 4.98	**.202** 5.13
B	**.124** 3.15	**.127** 3.22
C	**.100** 2.54	**.133** 3.38
D	**.000** 0.00	**.007** 0.25
E	**.050** 1.27	**.065** 1.65
F	**.000** 0.00	**.010** 0.25
G	**.020** 0.50	**.021** 0.53
H	**.000** 0.00	**.010** 0.25
J	70°	95°

Jack

Dim.	Min.	Max.
A	**.153** 3.89	**.160** 4.06
B	**.127** 3.23	**.130** 3.30
C	**.075** 1.91	**.077** 1.96
D	**.000** 0.00	**.007** 0.25
E	**.020** 0.51	**.040** 1.02
F	**.075** 1.91	—
G	**.000** 0.00	**.010** 0.25
H	**.190** 4.83	**.210** 5.33
J	**.230** 5.84	—

1. ID to meet VSWR and contact resistance when mated with .020 +.0008/-.0005 [0.51 +.0203/-.0127] dia. pin.
2. When fully engaged, the two reference planes must coincide with metal to metal contact.

Dimensions are shown for reference purposes only. Specifications subject to change.

Dimensions are in millimeters unless otherwise specified.

USA: +1 800 522 6752
Asia Pacific: +86 0 400 820 6015
UK: +44 800 267 666

For additional support numbers please visit www.te.com

SSMA Subminiature Coaxial Connectors (Continued)

Specifications

General	
Materials	Steel corrosion resistant per ASTM-A-582 and ASTM-A-484, Type 303. Beryllium copper per ASTM B 196. PTFE Fluorocarbon per ASTM-D-1457.
Finishes which	Center contacts shall be gold plated to a min. thickness of .00005 [0.0013] in accordance with MIL-G-45204, Typ I, Grade C. All other metal parts shall be finished as to provide a connector meets the corrosion requirements.
Design	The design shall be such that the outline shown in this catalog and the interface dimensions of MIL-STD-348A are met.
Electrical	
Insulation Resistance	The insulation resistance shall not be less than 5,000 megohms.
Corona Level	The connector shall not exhibit breakdown when the voltage is 190 volts rms at 70,000 ft.
Dielectric Withstanding Voltage	The magnitude of the test voltage shall be 750 volts rms at sea level.
RF HIgh Potential	The withstanding voltage is 500 volts rms at 5 MHz. Leakage current is not applicable.
Contact Resistance	Center contact resistance: 2 milliohms max. Outer contact resistance: 2 milliohms max.
VSWR	Refer to applicable military slash sheet or consult factory. Frequency range dependent on cable used.
RF Leakage	Refer to applicable military slash sheet or consult factory.
Insertion Loss	Refer to applicable military slash sheet or consult factory. Frequency range dependent on cable use.
Mechanical	
Force to Engage	The torque required to engage and disengage shall not exceed 2 in.-lbs. The longitudinal force is not applicable.
Coupling Nut Retention	60 lbs. min. Applicable for plug connectors only.
Coupling Proof Torque	5 in.-lbs. min. Applicable for plug connectors only.
Cable Retention	Refer to applicable military slash sheet or consult factory.
Mating Characteristics	Applicable to jack connectors only. Reference MIL-STD-348A for dimensions; oversize pin .021 [0.53] min. dia., .045 [1.14] deep; insertion force 3 lbs. max. with .0208 [0.528] min. dia. pin; withdrawal force 1 oz. min. with .0195 [0.495] max. dia. pin.
Connector Durability	The connector to be tested and its mating connector shall be subjected to 500 insertion and withdrawal cycles at 12 cycles per minute max. The connector shall show no evidence of mechanical failure and shall meet the mating characteristic requirements.
Recommended Mating Torque	5 in.-lbs.
Environmental	
Vibration	Specification MIL-STD-202, method 204, test condition D.
Shock	Specification MIL-STD-202, method 213, test condition I.
Thermal Shock	Refer to applicable military slash sheet or consult factory.
Corrosion (Salt Spray)	Specification MIL-STD-202, method 101, test condition B.
Moisture Resistance	Specification MIL-STD-202, method 106. No measurements at high humidity. Insulation resistance shall be at least 200 megohms within 5 minutes of removal from humidity.

Catalog 1308940
Revised 9-14

www.te.com

Dimensions are shown for reference purposes only. Specifications subject to change.

Dimensions are in millimeters unless otherwise specified.

USA: +1 800 522 6752
Asia Pacific: +86 0 400 820 6015
UK: +44 800 267 666

For additional support numbers please visit www.te.com

SSMA Subminiature Coaxial Connectors (Continued)

For Semi-Rigid Cable

.085 [2.16] Dia. Direct Solder Attachment

Straight Cable Plug (Without Center Contact)

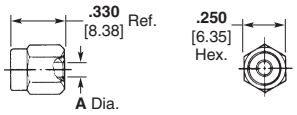

Part No.	Reference Part No. (Ref. Only)	Dim. A	RG/U Cable
1045370-1	1001-7985-02	.088 2.22 Min.	405

Electrical

DC — 40.0 GHz

Straight Cable Plug (With Center Contact)

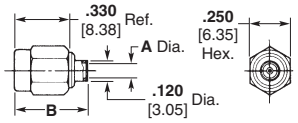

Part No.	Reference Part No. (Ref. Only)	Dim. A	Dim. B	RG/U Cable	DSCC Part No.
1045351-1	1001-5004-02	.088 2.22 Min.	.447 11.35 Ref.	405	—
1045358-1	1001-5045-92	.088 2.22 Min.	.467 11.86 Ref.	405	86116ZSG

Straight Cable Jack (With Center Contact)

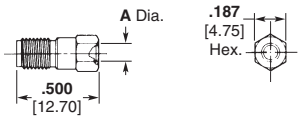

Part No.	Reference Part No. (Ref. Only)	Dim. A	RG/U Cable
1045381-1	1002-7985-00	.088 2.22 Min.	405

Bulkhead Feed-through Cable Jack

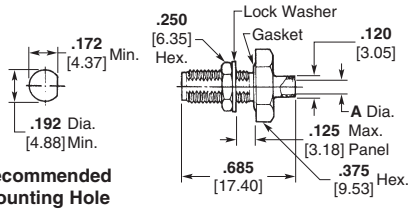

Part No.	Reference Part No. (Ref. Only)	Dim. A	RG/U Cable	DSCC Part No.
1045401-1	1004-7985-00	.088 2.22 Min.	405	—
1045398-1	1004-5005-90	.088 2.22 Min.	405	86117ZSG

Flange Mount Cable Jack

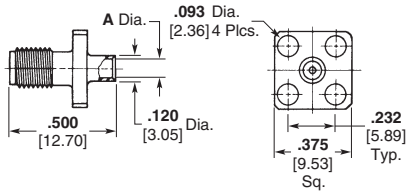

Part No.	Reference Part No. (Ref. Only)	Dim. A	RG/U Cable
1045410-1	1006-7985-00	.088 2.22 Min.	405

Right-Angle Cable Plug

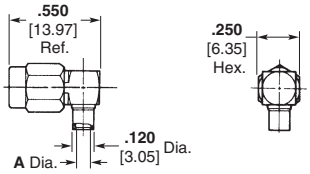

Part No.	Reference Part No. (Ref. Only)	Dim. A	RG/U Cable	DSCC Part No.
1045423-1	1007-7985-02	.088 2.22 Min.	405	—
1045418-1	1007-5015-92	.088 2.22 Min.	405	86118ZSG

Finish: Passivated stainless steel, -02. For gold plated coupling nut, change the Part Number suffix from -02 to -00. Inner housing that is soldered to cable is gold plated.
Refer to recommended assembly tools in Application Tooling Section.

Dimensions are shown for reference purposes only. Specifications subject to change.

Dimensions are in millimeters unless otherwise specified.

USA: +1 800 522 6752
Asia Pacific: +86 0 400 820 6015
UK: +44 800 267 666

For additional support numbers please visit www.te.com

SSMA Subminiature Coaxial Connectors (Continued)

For Flexible Cable — Solder Attachment

Straight Cable Plug[1]

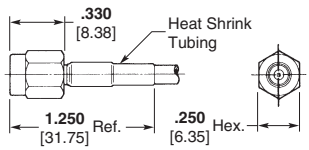

Part No.	Reference Part No. (Ref. Only)	RG/U Cable
1045477-1	1031-5001-02	178/U, 196
1045482-1	1031-5002-02	174/U, 179, 187, 188, 316

Straight Cable Jack

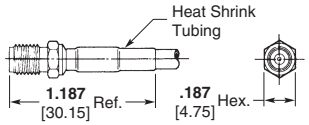

Part No.	Reference Part No. (Ref. Only)	RG/U Cable
1045496-1	1032-5001-00	178/U, 196
1045497-1	1032-5002-00	174/U, 179, 187, 188, 316

Finish: Gold plated. Inner housing that is soldered to cable is gold plated.

Right-Angle Cable Plug[1]

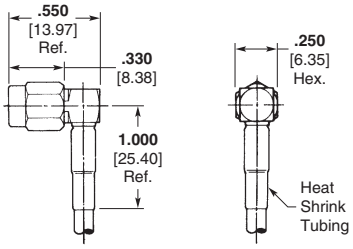

Part No.	Reference Part No. (Ref. Only)	RG/U Cable
1045507-1	1037-5001-00	178/U, 196
1045508-1	1037-5001-02	178/U, 196
1045511-1	1037-5002-02	174/U, 179, 187, 188, 316

For Flexible Cable — Crimp Attachment

Straight Cable Plug[1, 2]

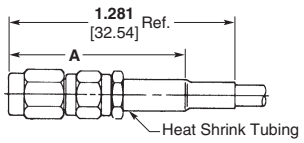

Part No.	Reference Part No. (Ref. Only)	Dim. A	RG/U Cable	DSCC Part No.
1045489-1	1031-7188-02	1.062 26.97 Ref.	174/U, 179, 187, 188, 316	—
1045486-1	1031-5031-92	1.062 26.97 Ref.	174, 316, 179	86119ZSG

Bulkhead Feed-through Cable Jack[1, 2]

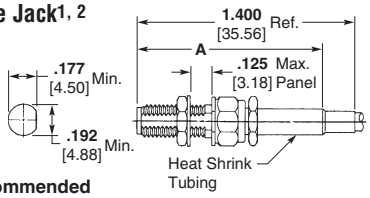

Recommended Mounting Hole

Part No.	Reference Part No. (Ref. Only)	Dim. A	RG/U Cable
1045506-1	1034-7196-02	1.050 26.67 Ref	178/U, 196
1045503-1	1034-7188-02	1.180 29.97 Ref.	174/U, 179, 187, 188, 316

Right-Angle Cable Plug[1, 2]

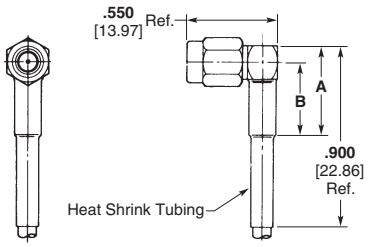

Part No.	Reference Part No. (Ref. Only)	Dim. A	Dim. B	RG/U Cable	DSCC Part No.
1045520-1	1037-7188-02	.625 15.88 Ref	.525 13.34 Ref.	174/U, 179, 187, 188, 316	—
1045517-1	1037-5032-92	.625 15.88 Ref	.525 13.34 Ref.	174, 316, 179	86120ZSG

Refer to recommended assembly tools in Application Tooling Section.
1. Finish: Passivated stainless steel, -02. For gold plated coupling nut, change the Part Number suffix from -02 to -00. Inner housing that is soldered to cable is gold plated.
2. Captured contact.
3. Non-captured contact

SSMA Subminiature Coaxial Connectors (Continued)

Panel Mount Receptacles

Solder Pot Terminals

Flange Mount Jack Receptacle[1]

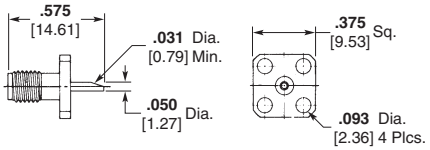

Reference Part No. (Ref. Only)	Part No.
1052-0000-00	1045568-1

Flange Mount Jack Receptacle[1]

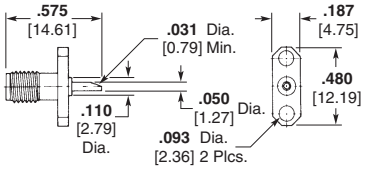

Reference Part No. (Ref. Only)	Part No.
1052-1300-02	1045582-1

Flange Mount Jack Receptacle[1]

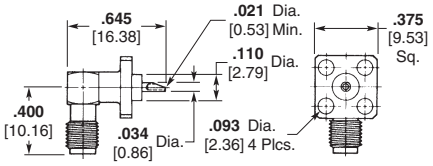

Reference Part No. (Ref. Only)	Part No.
1054-5005-02	1045621-1

Bulkhead Mount Receptacles

Solder Pot Terminals

Bulkhead Feed-through Jack Receptacles[1]

Rear Mount

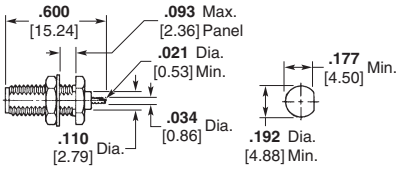

Recommended Mounting Hole

Reference Part No. (Ref. Only)	Part No.
1056-0000-02	1045630-1

Rear Mount (With "O" Ring)

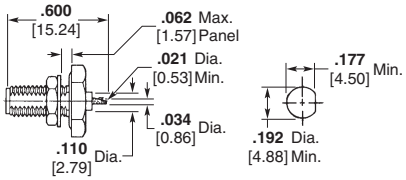

Recommended Mounting Hole

Reference Part No. (Ref. Only)	Part No.
1056-1100-02	1045632-1

Turret Terminal

Bulkhead Feed-through Jack Receptacle[1]

Front Mount

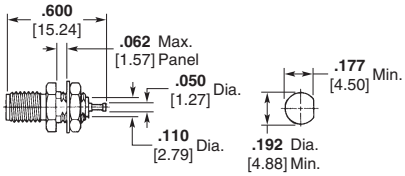

Recommended Mounting Hole

Reference Part No. (Ref. Only)	Part No.
1058-0000-02	1045637-1

Finish: Passivated stainless steel, -02. For gold plate, change the Part Number suffix from -02 to -00.
1. Captured Center Contact.

Dimensions are shown for reference purposes only. Specifications subject to change.

Dimensions are in millimeters unless otherwise specified.

USA: +1 800 522 6752
Asia Pacific: +86 0 400 820 6015
UK: +44 800 267 666

For additional support numbers please visit www.te.com

SSMA Subminiature Coaxial Connectors (Continued)

Panel Mount Receptacles

Straight Terminal

Flange Mount Jack Receptacle[2]

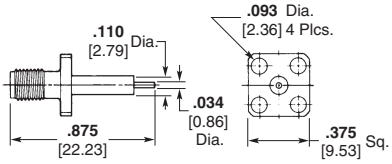

Reference Part No. (Ref. Only)	Part No.
1052-1200-02	1045576-1
1052-1201-02	1045578-1

Tab Terminal

Flange Mount Jack Receptacle[2]

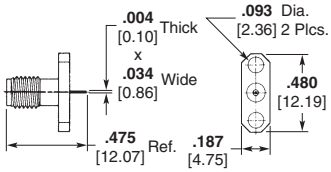

Reference Part No. (Ref. Only)	Part No.
1052-1302-02	1045586-1

Printed Circuit Boards

Straight Jack

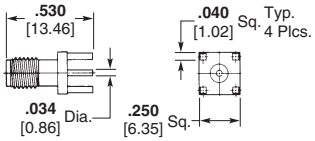

Reference Part No. (Ref. Only)	Part No.
1062-0000-00	1045672-1

Finish: Gold plate.

Right-Angle Jack

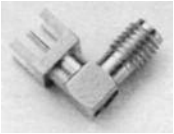

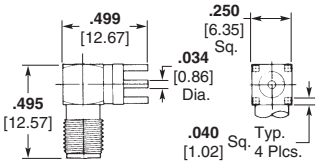

Reference Part No. (Ref. Only)	Part No.
1064-0000-00	1045677-1

Circuits

Microstrip Transmission Line Circuits, Flange Mount Jack[1]

Tab Terminal

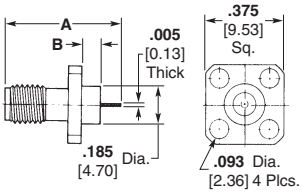

Reference Part No. (Ref. Only)	Part No.	Dim. A	Dim. B
1052-1132-00	1045573-1	.600 15.24 Ref.	.125 3.18 Ref.

Solderless Compression Terminal

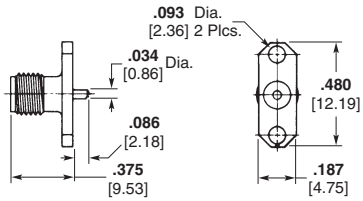

Reference Part No. (Ref. Only)	Part No.
1052-5013-00	1045607-1

Finish: Passivated stainless steel, -02. For gold plate, change the Part Number suffix from -02 to -00.
1. Captured center contact.
2. Non-captured center contact.

Dimensions are shown for reference purposes only. Specifications subject to change.

Dimensions are in millimeters unless otherwise specified.

USA: +1 800 522 6752
Asia Pacific: +86 0 400 820 6015
UK: +44 800 267 666

For additional support numbers please visit www.te.com

SSMA Subminiature Coaxial Connectors (Continued)

Hermetically Sealed

Metal-To-Metal Hermetic Seal

Jack Receptacle With EMI/RFI Gasket, Field Replaceable Solder and Braze-In[1, 4]

Electrical

VSWR (GHz) — 1.07 + .011f
RF Leakage (dB) — –(100 – fGHz)

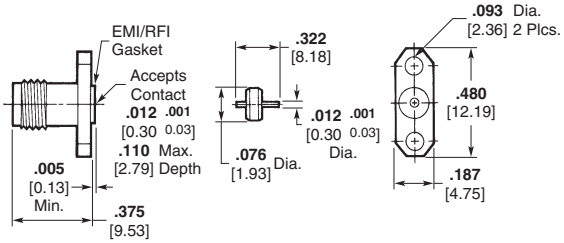

Reference Part No. (Ref. Only)	Part No.
1052-3355-02	1045598-1

Feed-through Jack Receptacle, Formable Gasket[2, 4]

Electrical

VSWR (GHz) — 1.05 + .01f
RF Leakage (dB) — –(100 – fGHz)

Mechanical

Installation Thermal Limit — 250°C

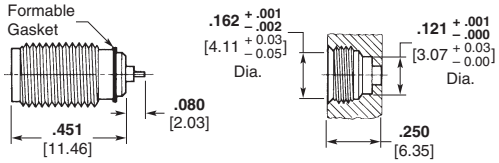

Reference Part No. (Ref. Only)	Part No.
1058-5014-00	1045651-1

Feed-through Jack Receptacle, Solder and Braze-In[3]

Electrical

VSWR (GHz) — 1.05 + .014f
RF Leakage (dB) — –(100 – fGHz)

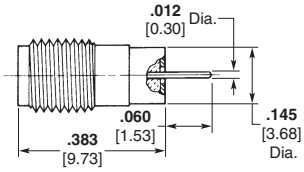

Reference Part No. (Ref. Only)	Part No.
1058-3203-00	1045647-1

Panel Feed-through Jack Receptacle, Solder and Braze-In

Electrical

VSWR (GHz) — 1.05 + .014f
RF Leakage (dB) — –(70 – fGHz)

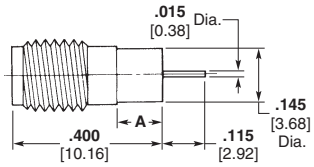

Reference Part No. (Ref. Only)	Part No.	Dim. A
1058-3121-00	1045643-1	.093 2.36
1058-3123-00	1045646-1	.187 4.75

Finish: Gold plate.

1. Finish: Passivated stainless steel, -02. For gold plate, change the Part Number suffix from -02 to -00.
2. Finish: Gold plate, -00. For passivated stainless steel, change the Part Number suffix from -00 to -02. For nickel plate, change the suffix from -00 to -10.
3. Finish: Gold plate, -00. This unit has a unique self-matching compensation step, allowing direct attachment to the substrate, resulting in minimal package size.
4. Refer to recommended assembly tools in Application Tooling section.

SSMA Subminiature Coaxial Connectors (Continued)

Hermetically Sealed
(Continued)

Panel Feed-through Hermetic Adapter

Jack to Jack[1]

Electrical
VSWR (GHz) — 1.10 + .01f
RF Leakage (dB) — –(100 – fGHz)

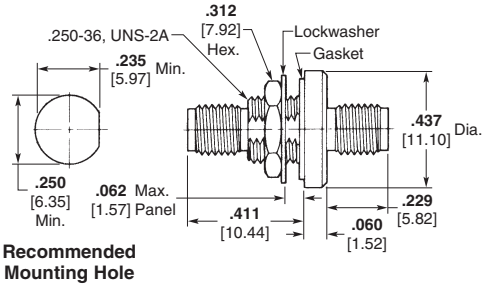

Reference Part No. (Ref. Only)	Part No.
1084-1100-00	1045725-1

O-Ring Gasket Hermetic Seal

Flange Mount Jack Receptacle[1, 2]

Electrical
VSWR (GHz) — 1.05 + .01f
RF Leakage (dB) — –(70 – fGHz)

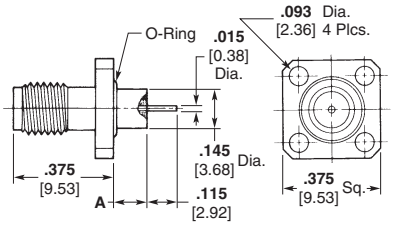

Reference Part No. (Ref. Only)	Part No.	Dim. A
1052-3121-00	1045593-1	.093 2.36

Rear Mount Jack Receptacle[1, 2]

Electrical
VSWR (GHz) — 1.05 + .014f
RF Leakage (dB) — –(70 – fGHz)

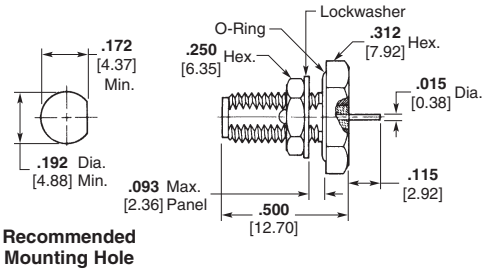

Reference Part No. (Ref. Only)	Part No.
1056-3100-00	1045633-1

Bulkhead Feed-through Front Mount Jack Receptacle

Electrical
VSWR (GHz) — 1.05 + .01f
RF Leakage (dB) — –(70 – fGHz)

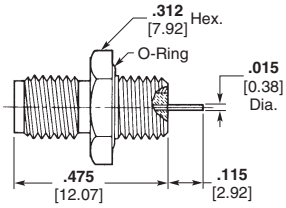

Reference Part No. (Ref. Only)	Part No.
1058-3100-00	1045642-1

1. Finish: Gold plate, -00. For passivated stainless steel, change the Part Number suffix from -00 to -02.
2. On passivated versions (-02), pins are pre-tinned using Sn60 solder.

Dimensions are shown for reference purposes only. Specifications subject to change.

Dimensions are in millimeters unless otherwise specified.

USA: +1 800 522 6752
Asia Pacific: +86 0 400 820 6015
UK: +44 800 267 666

For additional support numbers please visit www.te.com

SSMA Subminiature Coaxial Connectors (Continued)

In-Series Adapters

Jack to Jack Adapter

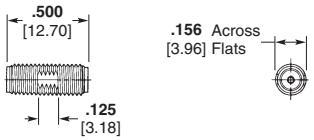

Reference Part No. (Ref. Only)	Part No.
1080-0000-02	1045701-1

Plug to Plug Adapter

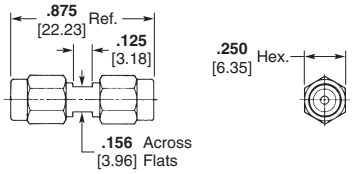

Reference Part No. (Ref. Only)	Part No.
1081-0000-02	1045704-1

Plug to Jack Adapter (Connector Saver)

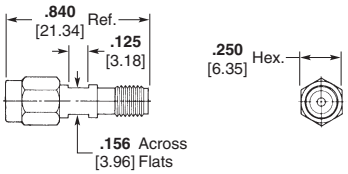

Reference Part No. (Ref. Only)	Part No.
1082-0000-02	1045708-1

Bulkhead Mount Jack to Jack Adapter

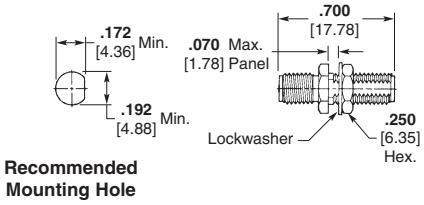

Reference Part No. (Ref. Only)	Part No.
1084-0000-02	1045723-1

Right-Angle Plug to Jack Adapter

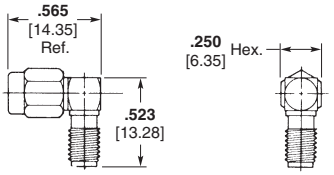

Reference Part No. (Ref. Only)	Part No.
1088-0000-02	1045747-1

Finish: Passivated stainless steel, -02. For gold plate, change the Part Number suffix from -02 to -00.

Dimensions are shown for reference purposes only. Specifications subject to change.

Dimensions are in millimeters unless otherwise specified.

USA: +1 800 522 6752
Asia Pacific: +86 0 400 820 6015
UK: +44 800 267 666

For additional support numbers please visit www.te.com

SSMA Subminiature Coaxial Connectors (Continued)

High Frequency For Semi-Rigid Cable

.085 [2.16] and .070 [1.78] Dia. — Direct Solder Attachment

Straight Cable Plug (Without Center Contact)[1, 3]

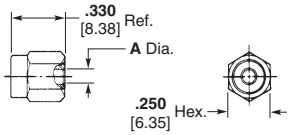

Specifications

Nominal Impedance — 50 ohms

Frequency Range — dc to 40 GHz

Voltage Standing Wave Ratio — 1.07 + .010 f (GHz)

Insertion Loss — .04 x $\sqrt{f\ (GHz)}$ = dB max.

Voltage Rating — 250 volts RMS max. working voltage

Reference Part No. (Ref. Only)	Part No.	Dim. A	RG/U Cable	Cable Dielectric
1001-7985-00	1045369-1	.087 2.2	405	Solid PTFE

Straight Cable Plug Center Contact[1, 3]

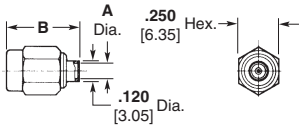

Reference Part No. (Ref. Only)	Part No.	Dim. A	Dim. B	RG/U Cable	Cable Dielectric
1401-7985-00	1046477-1	.088 2.22	.447 11.35	405	Solid PTFE

Straight Cable Jack[3]

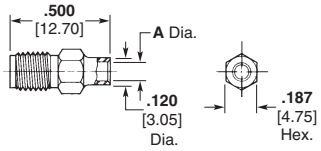

Reference Part No. (Ref. Only)	Part No.	Dim. A	RG/U Cable	Cable Dielectric
1402-7985-00	1046479-1	.088 2.22	405	Solid PTFE

Finish: Gold plate.

Panel Mount — Straight Terminal

Flange Mount Jack Receptacle[2, 4]

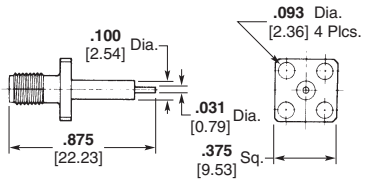

Reference Part No. (Ref. Only)	Part No.
1452-1201-02	1086451-1

1. Finish: Gold plated, -00. For passivated stainless steel coupling nut, change the Part Number suffix from -00 to -02. Inner housing that is soldered to cable is gold plated.
2. Finish: Passivated stainless steel, -02. For gold plate, change the Part Number suffix from -02 to -00.
3. Refer to recommended assembly tools in Appication Tooling Section.
4. Captured center contact.

Catalog 1308940
Revised 9-14

www.te.com

Dimensions are shown for reference purposes only. Specifications subject to change.

Dimensions are in millimeters unless otherwise specified.

USA: +1 800 522 6752
Asia Pacific: +86 0 400 820 6015
UK: +44 800 267 666

For additional support numbers please visit www.te.com

RF One-Step BNC/TNC Connectors

Product Facts

- **Easy, quick installation**
- **Outstanding cable-retention force**
- **Solder-solder connection type (center conductor and braid)**
- **One-step termination for easy, quick installation and lower installed cost**
- **Exceptional cable retention force to withstand high vibration and frequent mates and unmates**
- **Fully soldered center conductor and braid**
- **Excellent built-in strain relief against vibration and excessive handling**
- **Long-term reliability**
- **Controlled soldering termination**
- **Use with standard RG/U cables and Raychem brand Cheminax cables**
- **Three product sizes to accommodate a wide range of cables**
- **Meets performance requirements of MIL-PRF-39012 up to 2.8 GHz**

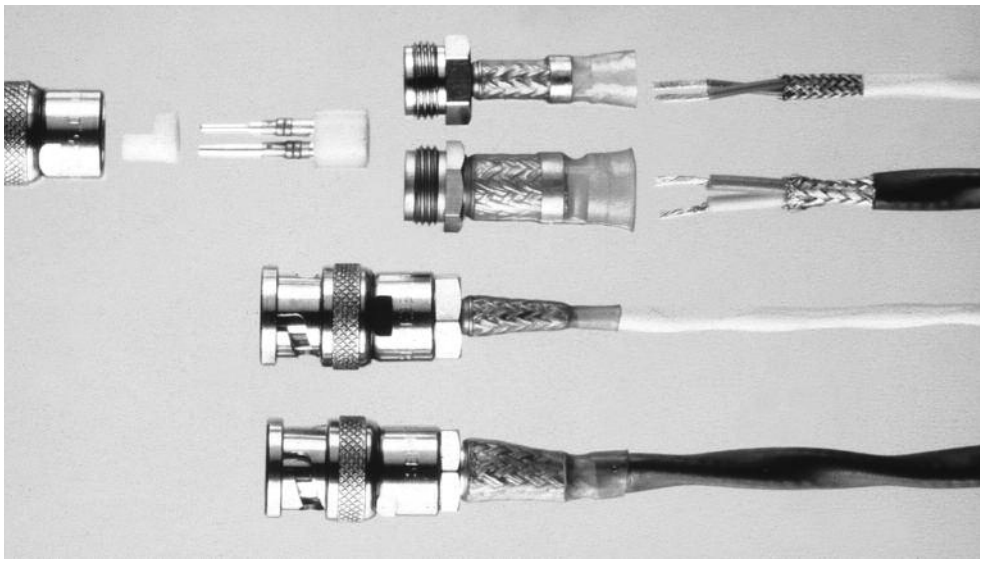

Applications

One-Step BNC/TNC connectors are single-piece assemblies for terminating the center conductor and the braid of a broad range of coaxial cables.

The connectors are fully intermateable with MIL-PRF-39012 connectors and are available in 50-ohm and 75-ohm versions.

Specifications	Installation	
TE Connectivity RB-115	For proper installation of these devices, the correct heating tool and reflector attachment must be used. Any one of the following Raychem heating tools is recommended: • Steinel® Model HL1802E • CV-1981	Refer to TE installation procedure RPIP 683-00 for detailed instructions.

Catalog 1308940
Revised 9-14

www.te.com

Dimensions are shown for reference purposes only. Specifications subject to change.

Dimensions are in millimeters unless otherwise specified.

USA: +1 800 522 6752
Asia Pacific: +86 0 400 820 6015
UK: +44 800 267 666

For additional support numbers please visit www.te.com

RF One-Step BNC/TNC Connectors (Continued)

Product Options and Part Numbering System

RXX - XX - X - XX	Connector Style: Dash No. -XX	Connector Style: Style	Connector Type: TNC	Connector Type: BNC
	-00	Straight plug	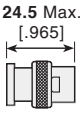	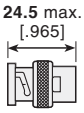
	-01	Right-angle plug	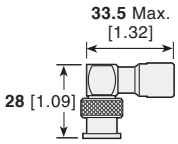	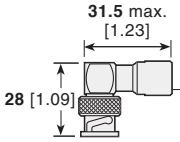
	-02	Straight bulkhead jack	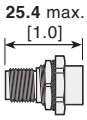	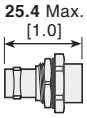
	-03	Straight jack	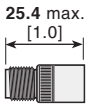	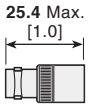
	-04	Straight panel jack	4 x M2.5 x 0.45	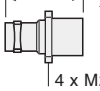 4 x M2.5 x 0.45

Male

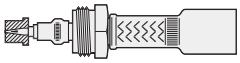

Female

Connector size

L = Large
M = Medium
S = Small

50 = 50 ohms
75 = 75 ohms

D = Nickel-plated brass body, gold-plated brass pin

B = BNC
T = TNC

Example: RBD-50-L-00 is a BNC connector, 50 ohms, large size, with straight plug body.

Catalog 1308940
Revised 9-14

www.te.com

Dimensions are shown for reference purposes only. Specifications subject to change.

Dimensions are in millimeters unless otherwise specified.

USA: +1 800 522 6752
Asia Pacific: +86 0 400 820 6015
UK: +44 800 267 666

For additional support numbers please visit www.te.com

RF One-Step BNC/TNC Connectors (Continued)

Product Characteristics

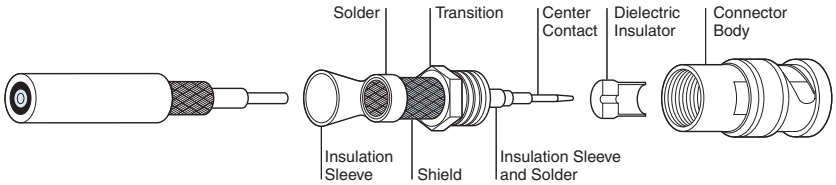

Material	
Center contact	Gold-plated beryllium copper (female)
	Gold-plated brass (male)
Dielectric insulator	PTFE
Transition	Silver-plated brass
Connector body	Nickel-plated brass
Solder and flux	Sn63Pb37, RMA flux
Braided shield	Tin-plated copper wire per ASTM B3
Insulation sleeve	Radiation-crosslinked, heat-shrinkable polyvinylidene fluoride, transparent blue
Strain relief/sealing sleeve	Radiation-crosslinked, heat-shrinkable modified polyolefin with adhesive, black
Typical Performance	
Dielectric withstand voltage	1500 V
Insulation resistance	5000 megohms
Temperature rating	-55˚C to 150˚C [-67˚F to 302˚F]
Contact resistance-straight	Inner = 1.5 milliohms, outer = 1.0 milliohm
Contact resistance — right-angle	Inner = 2.5 milliohms, outer = 1.5 milliohms
Cable retention force	295N (66 lb) to 822N (196 lb)
Voltage rating	500 V RMS
Connector durability	500 mating cycles minimum
Electrical Performance	
Nominal impedance	50 and 75 ohms
Frequency range	Up to 2.8 GHz

Part Selection Process

1. From Product Options and Part Numbering System on page 2-35, select the connector style you need (BNC or TNC, plug or jack, male or female contacts).
2. From the tables that follow, find the appropriate table for the connector style you selected.
3. From the appropriate table, select the connector part number based on the RG cable type or Raychem cable part number. For cable types not shown use the cable dimensions.
   Note: The cable dimensions in each table are keyed to the diagram below.

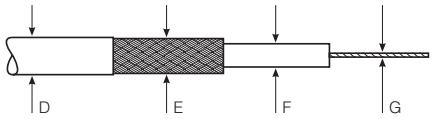

RF One-Step BNC/TNC Connectors (Continued)

Impedance (ohms)	Cable Type: RG Cables	Cable Type: Raychem Cables	Cable Dimensions: D (Min.–Max.)	Cable Dimensions: E (Min.–Max.)	Cable Dimensions: F (Max.)	Cable Dimensions: G (Max.)	Part No.
BNC Straight Plugs, Male Contacts							
50	RG-174, RG-178, RG-188, RG-196,RG–316	5026A1311, 5028A1317, 5030A1317	1.50–5.50 [.060–.217]	0.90–3.00 [.035–.118]	1.55 [.060]	0.65 [.025]	RBD-50-S-00
50	RG-58, RG-141, RG-142, RG-303, RG-400	5019D3318, 5021D1331, 5020A1311	3.50–7.00 [.138–.276]	2.10–5.00 [.083–.197]	3.00 [.118]	1.25 [.050]	RBD-50-M-00
50	RG-165, RG-215, RG-213, RG-225, RG-214	5012F3332, 5012A3311	5.00–12.50 [.197–.500]	4.10–9.50 [.161–.375]	7.30 [.287]	2.45 [.100]	RBD-50-L-00
75	RG-179, RG-187	7530A1317	1.50–5.00 [.060–.217]	5 0.90-3.00 [.035–.118]	1.55 [.060]	0.65 [.025]	RBD-75-S-00
75	—	7524A1311, 7528A1317	3.50–7.00 [.138–.276]	2.10–5.00 [.083–.197]	3.70 [.126]	1.25 [.050]	RBD-75-M-00
75	RG-6, RG-11, RG-12, RG-59 RG-144, RG-216	—	5.00–.12.50 [.197–.500]	4.10–9.50 [.161–.375]	7.3 [.287]	2.45 [.100]	RBD-75-L-00
BNC Right-Angle Plugs, Male Contacts							
50	RG-174, RG-178, RG-188, RG-196,RG–316	5026A1311, 5028A1317, 5030A1317	1.50–5.50 [.060–.217]	0.90–3.00 [.035–.118]	1.55 [.060]	0.65 [.025]	RBD-50-S-01
50	RG-58, RG-141, RG-142, RG-303, RG-400	5019D3318, 5021D1331, 5020A1311	3.50–7.00 [.138–.276]	2.10–5.00 [.083–.197]	3.00 [.118]	1.25 [.050]	RBD-50-M-01
50	RG-165, RG-215, RG-213, RG-225, RG-214	5012F3332, 5012A3311	5.00–12.50 [.197–.500]	4.1–9.50 [.161–.375]	7.30 [.287]	2.45 [.100]	RBD-50-L-01
75	RG-179, RG-187	7530A1317	1.50–5.50 [.060–.217]	0.9-3.00 [.035–.118]	1.55 [.060]	0.65 [.025]	RBD-75-S-01
75	—	524A1311, 7528A1317	3.50–7.00 [.138–.276]	2.1–5.00 [.083–.197]	3.70 [.146]	1.25 [.050]	RBD-75-M-01
75	RG-6, RG-11, RG-12, RG-59 RG-144, RG-216	—	5.00–12.50 [.197–.500]	4.1–9.50 [.161–.375]	7.30 [.287]	2.45 [.100]	RBD-75-L-01
BNC Straight Bulkhead Jacks, Female Contacts							
50	RG-174, RG-178, RG-188, RG-196,RG–316	5026A1311, 5028A1317, 5030A1317	1.50–5.50 [.060–.217]	0.90–3.00 [.035–.118]	1.55 [.060]	0.65 [.025]	RBD-50-S-02
50	RG-58, RG-141, RG-142, RG-303, RG-400	5019D3318, 5021D1331, 5020A1311	3.50–7.00 [.138–.276]	2.10–5.00 [.083–.197]	3.00 [.118]	1.25 [.050]	RBD-50-M-02
50	RG-165, RG-215, RG-213, RG-225, RG-214	5012F3332, 5012A3311	5.00–12.50 [.197–.500]	4.10–9.50 [.161–.375]	7.30 [.287]	2.45 [.100]	RBD-50-L-02
75	RG-179, RG-187	7530A1317	1.50–5.00 [.060–.217]	5 0.90-3.00 [.035–.118]	1.55 [.060]	0.65 [.025]	RBD-75-S-02
75	—	75 7524A1311, 7528A1317	3.50–7.00 [.138–.276]	2.10–5.00 [.083–.197]	3.70 [.146]	1.25 [.050]	RBD-75-M-02
75	RG-6, RG-11, RG-12, RG-59 RG-144, RG-216	—	5.00-12.50 [.197–.500]	4.10–9.50 [.161–.375]	7.30 [.287]	2.45 [.100]	RBD-75-L-02
BNC Straight Jacks, Female Contacts							
50	RG-174, RG-178, RG-188, RG-196,RG–316	5026A1311, 5028A1317, 5030A1317	1.50–5.50 [.060–.217]	0.90–3.00 [.035–.118]	1.55 [.060]	0.65 [.025]	RBD-50-S-03
50	RG-58, RG-141, RG-142, RG-303, RG-400	5019D3318, 5021D1331, 5020A1311	3.50–7.00 [.138–.276]	2.10–5.00 [.083–.197]	3.00 [.118]	1.25 [.050]	RBD-50-M-03
50	RG-165, RG-215, RG-213, RG-225, RG-214	5012F3332, 5012A3311	5.00–12.50 [.197–.500]	4.10–9.50 [.161–.375]	7.30 [.287]	2.45 [.100]	RBD-50-L-03
75	RG-179, RG-187	7530A1317	1.50–5.50 [.060–.217]	0.90–3.00 [.035–.118]	1.55 [.060]	0.65 [.025]	RBD-75-S-03
75	—	75 7524A1311, 7528A1317	3.50–7.00 [.138–.276]	2.10–5.00 [.083–.197]	3.70 [.146]	1.25 [.050]	RBD-75-M-03
75	RG-6, RG-11, RG-12, RG-59 RG-144, RG-216	—	5.00–12.50 [.197–.500]	4.10–9.50 [.161–.375]	7.30 [.287]	2.45 [.100]	RBD-75-L-03
BNC Straight Panel Jacks, Female Contacts							
50	RG-174, RG-178, RG-188, RG-196,RG–316	5026A1311, 5028A1317, 5030A1317	1.50–5.50 [.060–.217]	0.90–3.00 [.035–.118]	1.55 [.060]	0.65 [.025]	RBD-50-S-04
50	RG-58, RG-141, RG-142, RG-303, RG-400	5019D3318, 5021D1331, 5020A1311	3.50–7.00 [.138–.276]	2.10–5.00 [.083–.197]	3.00 [.118]	1.25 [.050]	RBD-50-M-04
50	RG-165, RG-215, RG-213, RG-225, RG-214	5012F3332, 5012A3311	5.00–12.50 [.197–.500]	4.10–9.50 [.161–.375]	7.30 [.287]	2.45 [.100]	RBD-50-L-04
75	RG-179, RG-187	7530A1317	1.50–5.50 [.060–.217]	0.90–3.00 [.035–.118]	1.55 [.060]	0.65 [.025]	RBD-75-S-04
75	—	7524A1311, 7528A1317	3.50–7.00 [.138–.276]	2.10–5.00 [.083–.197]	3.70 [.146]	1.25 [.050]	RBD-75-M-04
75	RG-6, RG-11, RG-12, RG-59 RG-144, RG-216	—	5.00–12.50 [.197–.500]	4.10–9.5o [.161–.375]	7.30 [.287]	2.45 [.100]	RBD-75-L-04

Dimensions are shown for reference purposes only. Specifications subject to change.

Dimensions are in millimeters unless otherwise specified.

USA: +1 800 522 6752
Asia Pacific: +86 0 400 820 6015
UK: +44 800 267 666

For additional support numbers please visit www.te.com

RF One-Step BNC/TNC Connectors (Continued)

TNC Coaxial Connectors

Impedance (ohms)	Cable Type: RG Cables	Cable Type: Raychem Cables	Cable Dimensions: D (Min.–Max.)	Cable Dimensions: E (Min.–Max.)	Cable Dimensions: F (Max.)	Cable Dimensions: G (Max.)	Part No.
TNC Straight Plugs, Male Contacts							
50	RG-174, RG-178, RG-188, RG-196,RG–316	5026A1311, 5028A1317, 5030A1317	1.50–5.50 [.060–.217]	0.90–3.00 [.035–.118]	1.55 [.060]	0.65 [.025]	RTD-50-S-00
50	RG-58, RG-141, RG-142, RG-303, RG-400	5019D3318, 5021D1331, 5020A1311	3.50–7.00 [.138–.276]	2.10–5.00 [.083–.197]	3.00 [.118]	1.25 [.050]	RTD-50-M-00
50	RG-165, RG-215, RG-213, RG-225, RG-214	5012F3332, 5012A3311	5.00–12.50 [.197–.500]	4.10–9.50 [.161–.375]	7.30 [.287]	2.45 [.100]	RTD-50-L-00
75	RG-179, RG-187	7530A1317	1.50–5.50 [.060–.217]	0.90-3.00 [.035–.118]	1.55 [.060]	0.65 [.025]	RTD-75-S-00
75	—	7524A1311, 7528A1317	3.50–7.00 [.138–.276]	2.10–5.00 [.083–.197]	3.70 [.146]	1.25 [.050]	RTD-75-M-00
75	RG-6, RG-11, RG-12, RG-59 RG-144, RG-216	—	5.00–12.50 [.197–.500]	4.10–9.50 [.161–.375]	7.30 [.287]	2.45 [.100]	RTD-75-L-00
TNC Straight Jacks, Female Contacts							
50	RG-174, RG-178, RG-188, RG-196,RG–316	5026A1311, 5028A1317, 5030A1317	1.5–5.5 [.060–.217]	0.9–3.0 [.035–.118]	1.55 [.060]	0.65 [.025]	RTD-50-S-03
50	RG-58, RG-141, RG-142, RG-303, RG-400	5019D3318, 5021D1331, 5020A1311	3.5–7.0 [.138–.276]	2.1–5.0 [.083–.197]	3.0 [.118]	1.25 [.050]	RTD-50-M-03
50	RG-165, RG-215, RG-213, RG-225, RG-214	5012F3332, 5012A3311	5.0–12.5 [.197–.500]	4.1–9.5 [.161–.375]	7.3 [.287]	2.45 [.100]	RTD-50-L-03
75	RG-179, RG-187	7530A1317	1.5–5.5 [.060–.217]	0.9–3.0 [.035–.118]	1.55 [.060]	0.65 [.025]	RTD-75-S-03
75	—	7524A1311, 7528A1317	3.5–7.0 [.138–.276]	2.1–5.0 [.083–.197]	3.7 [.146]	1.25 [.050]	RTD-75-M-03
75	RG-6, RG-11, RG-12, RG-59 RG-144, RG-216	—	5.0–12.5 [.197–.500]	4.1–9.5 [.161–.375]	7.3 [.287]	2.45 [.100]	RTD-75-L-03
TNC Straight Panel Jacks, Female Contacts							
50	RG-174, RG-178, RG-188, RG-196,RG–316	5026A1311, 5028A1317, 5030A1317	1.5–5.5 [.060–.217]	0.9–3.0 [.035–.118]	1.55 [.060]	0.65 [.025]	RTD-50-S-04
50	RG-58, RG-141, RG-142, RG-303, RG-400	5019D3318, 5021D1331, 5020A1311	3.5–7.0 [.138–.276]	2.1–5.0 [.083–.197]	3.0 [.118]	1.25 [.050]	RTD-50-M-04
50	RG-165, RG-215, RG-213, RG-225, RG-214	5012F3332, 5012A3311	5.0–12.5 [.197–.500]	4.1–9.5 [.161–.375]	7.3 [.287]	2.45 [.100]	RTD-50-L-04
75	RG-179, RG-187	7530A1317	1.5–5.5 [.060–.217]	0.9–3.0 [.035–.118]	1.55 [.060]	0.65 [.025]	RTD-75-S-04
75	—	7524A1311, 7528A1317	3.5–7.0 [.138–.276]	2.1–5.0 [.083–.197]	3.7 [.146]	1.25 [.050]	RTD-75-M-04
75	RG-6, RG-11, RG-12, RG-59 RG-144, RG-216	—	5.0–12.5 [.197–.500]	4.1–9.5 [.161–.375]	7.3 [.287]	2.45 [.100]	RTD-75-L-04

Dimensions are shown for reference purposes only. Specifications subject to change.

Dimensions are in millimeters unless otherwise specified.

USA: +1 800 522 6752
Asia Pacific: +86 0 400 820 6015
UK: +44 800 267 666

For additional support numbers please visit www.te.com

RF One-Step BNC/TNC Connectors (Continued)

TNC Coaxial Connectors

Panel thickness: 3.2 [*.125*] max.

RBD-XX-X-04
RTD-XX-X-04

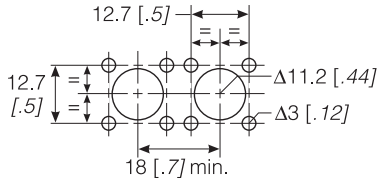

RBD-XX-X -02
RTD-XX-X -02

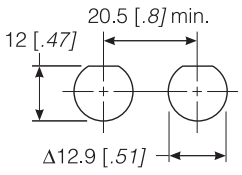

Cable Type			Cable Dimensions				Part No.
Impedance (ohms)	RG Cables	Raychem Cables	D (Min.–Max.)	E (Min.–Max.)	F (Max.)	G (Max.)	
TNC Straight Bulkhead Jacks, Female Contacts							
50	RG-174, RG-178, RG-188, RG-196,RG–316	5026A1311, 5028A1317, 5030A1317	1.50–5.50 [.060–.217]	0.90–3.00 [.035–.118]	1.55 [.060]	0.65 [.025]	RTD-50-S-02
50	RG-58, RG-141, RG-142, RG-303, RG-400	5019D3318, 5021D1331, 5020A1311	3.5–7.0 [.138–.276]	2.10–5.00 [.083–.197]	3.00 [.118]	1.25 [.050]	RTD-50-M-02
50	RG-165, RG-215, RG-213, RG-225, RG-214	5012F3332, 5012A3311	5.0–12.5 [.197–.500]	4.10–9.50 [.161–.375]	7.30 [.287]	2.45 [.100]	RTD-50-L-02
75	RG-179, RG-187	7530A1317	1.5–5.5 [.060–.217]	0.90–3.00 [.035–.118]	1.55 [.060]	0.65 [.025]	RTD-75-S-02
75	—	7524A1311, 7528A1317	3.5–7.0 [.138–.276]	2.10–5.00 [.083–.197]	3.70 [.146]	1.25 [.050]	RTD-75-M-02
75	RG-6, RG-11, RG-12, RG-59 RG-144, RG-216	—	5.0–12.5 [.197–.500]	4.10–9.50 [.161–.375]	7.30 [.287]	2.45 [.100]	RTD-75-L-02
TNC Right-Angle Plugs, Male Contacts							
50	RG-174, RG-178, RG-188, RG-196,RG–316	5026A1311, 5028A1317, 5030A1317	1.50–5.50 [.060–.217]	0.90–3.00 [.035–.118]	1.55 [.060]	0.65 [.025]	RTD-50-S-01
50	RG-58, RG-141, RG-142, RG-303, RG-400	5019D3318, 5021D1331, 5020A1311	3.50–7.00 [.138–.276]	2.10–5.00 [.083–.197]	3.00 [.118]	1.25 [.050]	RTD-50-M-01
50	RG-165, RG-215, RG-213, RG-225, RG-214	5012F3332, 5012A3311	5.00–12.50 [.197–.500]	4.10–9.50 [.161–.375]	7.30 [.287]	2.45 [.100]	RTD-50-L-01
75	RG-179, RG-187	7530A1317	1.50–5.50 [.060–.217]	0.90–3.00 [.035–.118]	1.55 [.060]	0.65 [.025]	RTD-75-S-01
75	—	7524A1311, 7528A1317	3.50–7.00 [.138–.276]	2.10–5.00 [.083–.197]	3.70 [.146]	1.25 [.050]	RTD-75-M-01
75	RG-6, RG-11, RG-12, RG-59 RG-144, RG-216	—	5.0–12.5 [.197–.500]	4.10–9.50 [.161–.375]	7.30 [.287]	2.45 [.100]	RTD-75-L-01

Catalog 1308940
Revised 9-14

www.te.com

Dimensions are shown for reference purposes only. Specifications subject to change.

Dimensions are in millimeters unless otherwise specified.

USA: +1 800 522 6752
Asia Pacific: +86 0 400 820 6015
UK: +44 800 267 666

For additional support numbers please visit www.te.com

Application Tooling

Hand Tools

TE Connectivity CERTI-CRIMP Hand Tools are our top-of-the-line crimping tools featuring the original ratcheted crimp control. All tools are designed to exacting specifications, and manufactured using high quality materials to provide long service life. Recommended for low production runs, repairs and prototype work, and applications requiring consistent, highly-reliable terminations.
See Catalog 65780 for further information.

Typical CERTI-CRIMP Hand Tools with Integral (Non-Interchangeable) Dies

Part Number 58537-1 (used with PRO-CRIMPER Tool Frame 354940-1)
for 50 Ohm BNC Dual Crimp MIL Type Connectors

Part Number 220015-1
for 50 Ohm N Connectors

CERTI-CRIMP Hand Tool with Interchangeable Dies

Part Number 69710

Hand Tool Kit for SMA and Blindmate Connectors

Part Number 59981-1

Item Description	Part Numbers	
	TE	Military (M22520/)
Hand Tool	59980-1	36-01
Plug Locator (without Center Contact)	220220-2	36-06
Plug Locator (with Center Contact)	220221-2	36-04
Jack Locator	220222-2	36-05
Die Set for RG-402/U Cable (.141 [3.58] O.D.)	312253-1	36-03
Die Set for RG-405/U Cable (.086 [2.18] O.D.)	312253-2	36-02
Cutoff Fixture	311395-1	36-09
Cable Dressing Fixture	311396-1	36-07
Trimmer Tool	312317-1	36-08
Cable Bend Fixture Assembly Includes following 6 items:	220224-1	36-10
Bend Segment, RG-402/U (.125 [3.18] Radius)	311386-1	36-11
Bend Segment, RG-402/U (.250 [6.35] Radius)	311386-2	36-12
Bend Segment, RG-405/U	311386-3	36-13
Tool Holder	311392-1	—
Limiting Pin	307581-1	—
Conforming Block	312067-1	—
Hex Wrench	21027-6	—
Carrying Case	13126-1	—
Insert, Case	13127-1	—

Dimensions are shown for reference purposes only. Specifications subject to change.

Dimensions are in millimeters unless otherwise specified.

USA: +1 800 522 6752
Asia Pacific: +86 0 400 820 6015
UK: +44 800 267 666

For additional support numbers please visit www.te.com

Application Tooling (Continued)

Solder Assembly Kit Brass SMA Connectors

Kit Part Number 1055420-1

(Reference Kit Part Number 2098-5066-54)

For installation of SMA connectors to .035 [0.89] and .141 [3.58] diameter semi-rigid cable

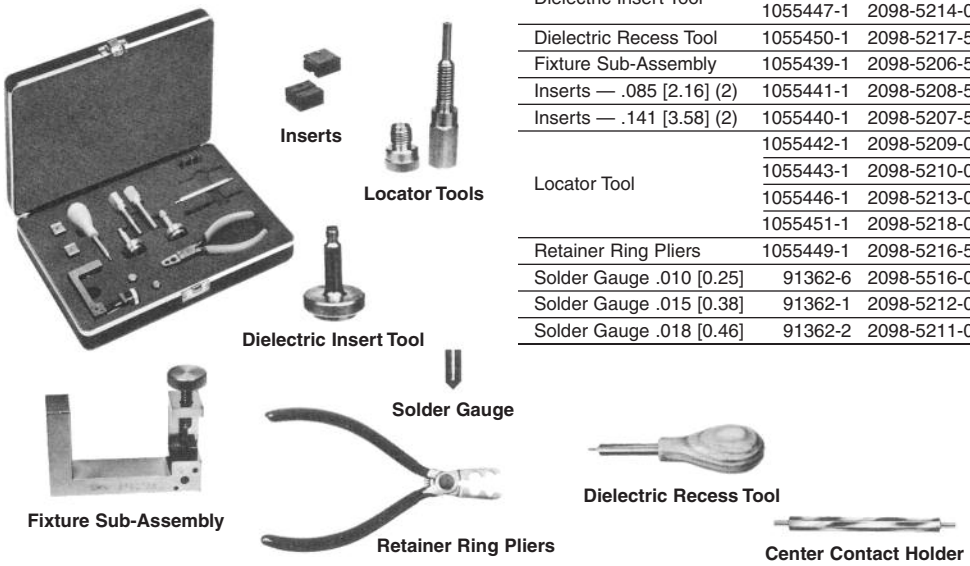

Item Description	Part No.	Reference Part No. (Ref. Only)
Center Contact Holder	1055454-1	2098-5221-10
Dielectric Insert Tool	1055448-1	2098-5215-02
	1055447-1	2098-5214-02
Dielectric Recess Tool	1055450-1	2098-5217-54
Fixture Sub-Assembly	1055439-1	2098-5206-54
Inserts — .085 [2.16] (2)	1055441-1	2098-5208-54
Inserts — .141 [3.58] (2)	1055440-1	2098-5207-54
Locator Tool	1055442-1	2098-5209-02
	1055443-1	2098-5210-02
	1055446-1	2098-5213-02
	1055451-1	2098-5218-02
Retainer Ring Pliers	1055449-1	2098-5216-54
Solder Gauge .010 [0.25]	91362-6	2098-5516-02
Solder Gauge .015 [0.38]	91362-1	2098-5212-02
Solder Gauge .018 [0.46]	91362-2	2098-5211-02

Universal Compression Crimp Tool

Kit Part Number 1055835-1

(Reference Kit Part Number 2598-5200-54)

TE Connectivity Universal Compression Crimp Tool offers the ability to rapidly produce cable assemblies using solderless compression crimp connectors with semi-rigid cables. This universal assembly tool kit will attach SMA, OSP (BMA), N and TNC series connectors to .141 [3.58], .085 [2.16] and .250 [6.35] cable quickly and consistently with excellent mechanical and electrical results.

The tool kit permits single hand assembly. Anvils and cable supports can be quickly changed. Crimp lengths can be adjusted from .001 [.025] to 1.000 [25.4] in increments of .001 [.025]. Sharp radius bends in cables are easily accommodated. The kit contains:

Description	Part No.	Reference Part No. (Ref. Only)
Crimp Frame	1055831-1	2598-5196-54
Calibration Gauge	1055832-1	2598-5197-54
.141 [3.58] Cable Support	1055833-1	2598-5198-54
.085 [2.16] Cable Support	1055834-1	2598-5199-54
SMA Plug Anvil	1055836-1	2598-5201-54
SMA Jack Anvil	1055837-1	2598-5202-54
Type N Plug Anvil	1055838-1	2598-5203-54
Type N Jack Anvil	1055839-1	2598-5204-54
TNC Plug Anvil	1055840-1	2598-5205-54
TNC Jack Anvil	1055841-1	2598-5206-54
OSP (BMA) Plug Anvil	1055842-1	2598-5207-54
OSP (BMA) Jack Anvil	1055843-1	2598-5208-54

All tools may be purchased separately.

Catalog 1308940
Revised 9-14

www.te.com

Dimensions are shown for reference purposes only. Specifications subject to change.

Dimensions are in millimeters unless otherwise specified.

USA: +1 800 522 6752
Asia Pacific: +86 0 400 820 6015
UK: +44 800 267 666

For additional support numbers please visit www.te.com

Application Tooling (Continued)

MIL-C-22520/10-01 Equivalent Hex Crimp Kit

Kit Part Number 1055236-1

(Reference Kit Part Number 2098-0105-54)

For military specified applications requiring quick and efficient cable to connector attachment. Five popular hex die sizes are available to crimp the outer cable conductor to connector housings.

Die Change Tool

Crimp Tool

Hex Die

The kit contains:

Description	Part Number	Reference Part Number (Ref. Only)
Crimp Tool	1060713-1	9098-5105-54
Die Change Tool	1060716-1	5698-5014-54
Hex Die — A, B, C	1060714-1	5698-5015-54
Hex Die — D, E	1060715-1	5698-5016-54

All tools may be purchased separately.
For the assembly of SMA connectors,
Accessory Kit Part Number 1055421-1 is required.

A basic instruction sheet, included with the kit, aids in proper die selection

Hex Die Part Number	Reference Hex Die Part Number (Ref. Only)	Die	Hex Size ±.003 [0.08]	For Use With RG/U Cable
1060714-1	5698-5015-54	A	**.105** 2.67	178B & 196A
		B	**.213** 5.41	55B, 58C, 141A, 142B, 223, 303, & 400
		C	**.128** 3.25	174, 174B, 179, 187A, 188A, & 316
1060715-1	5698-5016-54	D	**.178** 4.52	180B, 195A, & 122
		E	**.255** 6.48	59, 62A, 71B, 210, & 302

Additional Dies Available

Hex Die Part Number	Reference Hex Die Part Number (Ref. Only)	Hex Size ±.003 [0.08]	For Use With RG/U Cable
1055270-1	2098-0323-54	**.151** 3.84	RD316 Double Braid

SMA Crimp Tool Accessory Kit

Kit Part Number 1055421-1

(Reference Kit Part Number 2098-5067-54)

For installation of SMA connectors to flexible braided cable. Crimp type SMA connectors require Hex Crimp Kit Part Number 1055236-1.

The kit contains:

Description	Part Number	Reference Part Number (Ref. Only)
Center Contact Holder	1055454-1	2098-5221-10
Locator Tool	1055446-1	2098-5213-02
Locator Tool	1055451-1	2098-5218-02
Solder Gauge .015 [0.38]	91362-1	2098-5212-02

All tools may be purchased separately.

Locator Tool

Solder Gauge

Center Contact Holder

Application Tooling (Continued)

Stripping Tools

The hand-operated TE Connectivity Coaxial Cable Stripper features interchangeable, color-coded blade cassettes and V-blocks to accommodate 2- or 3-step stripping for cable diameters ranging from 2.54 [.10] through 7.62 [.30]. You strip cable by simply clamping and rotating the tool around the cable. See Instruction Sheet IS 2766 for further information.

For Use With Connector Type	Tool No.
BNC Single Crimp	603995-1
BNC Commercial and UHF Miniature	603995-2
UHF Standard	603995-3
BNC MIL Type Dual Crimp	603995-5
BNC Commercial Dual Crimp	603995-6

Semi-Rigid Cable Tooling

The tools listed here are designed specifically to strip and terminate semi-rigid cable. These tools operate basically the same as the flexible cable tools, in that they produce uniform terminations time after time, without heat damage from soldering.

Hand Tool for BNC and TNC Semi-Rigid Cable Connectors

Part Number 59980-1
Frame only — does not include dies and locator

Manual Trim and Point Tool

TE offers a manual tool that performs both trimming and pointing operations. Tools are available for .141 [3.58] and .085 [2.16] diameter semi-rigid cable. These hand-operated tools are ideally suited for engineering, small production runs or field use. They feature tungsten carbide cutters for durability up to 30 times longer than the life of a high speed steel cutter. Replacement cutters are interchangeable and may be purchased separately.

Tool Part Number	Reference Tool Part Number (Ref. Only)	Cable	Trim Length
1055811-1	2598-5116-54	RG-402/U (.141 [3.58])	**.085** 2.16 Fixed
1055815-1	2598-5120-54	RG-405/U (.085 [2.16])	**.070** 1.78 Fixed
1055823-1	2598-5137-54	RG-402/U (.141 [3.58])	Adjustable*
1055824-1	2598-5138-54	RG-405/U (.085 [2.16])	Adjustable*

*Adjustable trim length from .050 [1.27] to .140 [3.56].

Replacement Cutters

Trimmer: Part Number 1055813-1
Pointer: Part Number 1055814-1

Replacement Collets

Part Number	Reference Part Number (Ref. Only)	Cable
1055825-1	2598-5145-54	RG-402/U (.141 [3.58])
1055827-1	2598-5167-54	RG-405/U (.085 [2.16])

Cable Benders for Semi-Rigid Cable

Cable Bender

Description	Part Number	Reference Part Number (Ref. Only)	Bend Radius*
Cable Bender for RG-405/U (.085 [2.16])	1055479-1	2098-5287-54	1/4 [6.4] 3/8 [9.8]
Cable Bender for RG-402/U (.141 [3.58])	1055478-1	2098-5286-54	3/8 [9.8] 1/2 [12.7]

*Radius of the bend is measured from the centerline of the cable.

Trimming Tools for Semi-Rigid Cable

For soldered semi-rigid cable connectors using the cable center conductor as its contact. These tools are optional for most installations but recommended for optimum connector performance.

Trim Tool

Description	Part Number	Reference Part Number (Ref. Only)
Trim Tool for SMA Connectors RG-402/U (.141 [3.58])	1055455-1	2098-5272-02
Trim Tool for SSMA Connectors RG-405/U (.085 [2.16])	1055465-1	2098-5269-02

Dimensions are shown for reference purposes only. Specifications subject to change.

Dimensions are in millimeters unless otherwise specified.

USA: +1 800 522 6752
Asia Pacific: +86 0 400 820 6015
UK: +44 800 267 666

For additional support numbers please visit www.te.com

Application Tooling (Continued)

Cable Trimmers for Production

TE Connectivity cable trimmers are designed for production trimming of RG-402/U (.141 [3.58]) and RG-405/U (.085 [2.16]) coaxial cables in preparation for connector installation. The trimming operation produces an unusually clean, burr-free cut with minimum smear. The length and depth of cut are adjustable. Replacement hardware can be used with either tool.

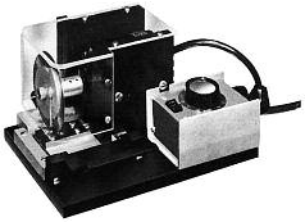

Cable Trimmers

Description	Part Number	Reference Part Number (Ref. Only)
RG-402/U (.141 [3.58])	1055526-1	2098-5676-54
RG-405/U (.085 [2.16])	1055530-1	2098-5686-54

Replacement Hardware

Description	Part Number	Reference Part Number (Ref. Only)
Saw Blade	1055524-1	2098-5674-54
Trim Saw Block (.141 [3.58])	1055527-1	2098-5678-54
Trim Saw Block (.085 [2.16])	1055528-1	2098-5679-54

Cable Pointers for Production

TE cable pointers are designed to point straight and bent cables and are adjustable for desired center conductor length. The cable pointers cut 90° point on copper as well as copper-clad center conductors.

Cable Pointers

Description	Part Number	Reference Part Number (Ref. Only)	Cable	Replacement Cutter Part Number	Reference Replacement Cutter Part Number (Ref. Only)
Single Pointer	1055525-1	2098-5675-54	RG-402/U (.141 [3.58])	1055529-1	2098-5681-54
Single Pointer	1080269-1	2098-5685-54	RG-405/U (.085 [2.16])		

Interface Inspection Gauges

TE offers Connector Interface Gauges. They have shock proof and fully jeweled dial indicators. The rugged construction of the dial mechanism minimizes the need for repair or replacement.

The gauge heads are manufactured from a corrosion resistant, hardening stainless steel which is heat treated for longer life. All critical surfaces are ground and lapped for precision fit and superior surface finish. The heads are securely fastened onto the dial indicator for no movement between the gauge head and the dial indicator spindle allowing for precise measurements.

Like the gauge heads, the plungers are specially designed to provide strength and durability.

Connector	Type	Gauge Kit Part Number	Reference Gauge Kit Part Number (Ref. Only)
SMA	Jack	1055496-1	2098-5455-54
	Plug	1055497-1	2098-5456-54

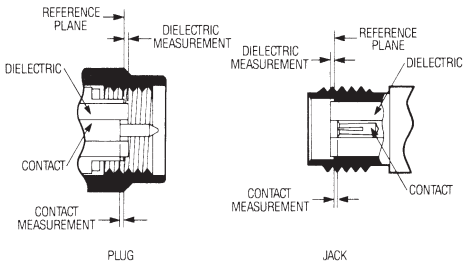

SMA Interface Example

Catalog 1308940
Revised 9-14

www.te.com

Dimensions are shown for reference purposes only. Specifications subject to change.

Dimensions are in millimeters unless otherwise specified.

USA: +1 800 522 6752
Asia Pacific: +86 0 400 820 6015
UK: +44 800 267 666

For additional support numbers please visit www.te.com

Application Tooling (Continued)

SSMA Connectors

Kit Part Number 1055466-1

(Reference Kit Part Number 2098-5270-54)

For installation of SSMA connectors to .070 [1.78] and .085 [2.16] diameter semi-rigid cable.

Item Description	Part No.	Reference Part No. (Ref. Only)
Center Contact Holder	1055463-1	2098-5237-10
Dielectric Insert Tool	1055458-1	2098-5233-02
	1055459-1	2098-5234-02
Dielectric Recess Tool	1055460-1	2098-5235-54
Fixture Sub-Assembly	1055439-1	2098-5206-54
Inserts — .070 [1.78] (2)	1055547-1	2098-5831-54
Inserts — .085 [2.16] (2)	1055441-1	2098-5208-54
Locator Tool	1055461-1	2098-5236-02
	1055464-1	2098-5238-02
	1055456-1	2098-5231-02
	1055457-1	2098-5232-02
Retainer Ring Pliers	1055449-1	2098-5216-54
Solder Gauge .015 [0.38]	91362-1	2098-5212-02

All tools may be purchased separately.

Inserts

Locator Tools

Dielectric Insert Tool

Solder Gauge

Fixture Sub-Assembly

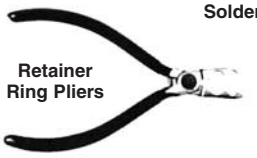

Retainer Ring Pliers

Dielectric Recess Tool

Center Contact Holder

Econo-Crimp Assembly Kit

Kit Part Number 1055779-1

(Reference Kit Part Number 2598-5005-54)

For quick and efficient cable to connector attachment. Five popular hex die sizes are available to crimp the outer cable conductor to connector housings.

Item Description	Part No.	Reference Part No. (Ref. Only)
Crimp Tool	1055780-1	2598-5006-54
Hex Die — A, B, C	1055781-1	2598-5007-54
Hex Die — D, E	1055782-1	2598-5008-54

All tools may be purchased separately.
For the assembly of SMA connectors, Accessory Kit Part Number 2098-5067-54 is required. For SSMA connectors, Accessory Kit Part Number 2098-5272-54 is required.

Crimp Tool

Hex Die

Hex Die Part Number	Reference Hex Die Part Number (Ref. Only)	Die	Hex Size ±.003 [0.08]	For Use With RG/U Cable
1055781-1	2598-5007-54	A	**.105** 2.67	178B & 196A
		B	**.213** 5.41	55B, 58C, 141A, 142B, 223, 303, & 400
		C	**.128** 3.25	174, 174B, 179, 187A, 188A, & 316
1055782-1	2598-5008-54	D	**.178** 4.52	180B, 195A, & 122
		E	**.255** 6.48	59, 62A, 71B, 210, & 302

SSMA Crimp Tool Accessories

Kit Part Number 1055467-1

(Reference Kit Model Number T-550)

For installation of SSMA connectors to flexible braided cable. Crimp type SSMA connectors require Hex Crimp Kit Part Number 1055779-1.

Locator Tool

Center Contact Holder

Description	Part Number	Reference Part Number (Ref. Only)
Center Contact Holder	1055463-1	2098-5237-10
Locator Tool	1055461-1	2098-5236-02
	1055464-1	2098-5238-02

All tools may be purchased separately.

Dimensions are shown for reference purposes only. Specifications subject to change.

Dimensions are in millimeters unless otherwise specified.

USA: +1 800 522 6752
Asia Pacific: +86 0 400 820 6015
UK: +44 800 267 666

For additional support numbers please visit www.te.com

Cross Reference

Military Part Number	Reference Part Number (Ref. Only)	TE Part No.	COTS Part No.
	2031-5011-00 2031-5011-02		1051660-1 1051661-1
M39012/01B0012		225092-7	
M39012/01B0013		51692-4	
M39012/01B007		225092-2	
M39012/01B008		225092-1	
M39012/02B008		225093-2	
M39012/03B0004		225094-2	
M39012/03B0005		225094-1	
M39012/05B0002		225014-2	
M39012/05B0002		225389-2	
M39012/05B0003		225014-3	
M39012/16B0004		2-331350-1	
M39012/16B0007		2-331350-9	
M39012/16B0008		331350	
M39012/17B0004		2-331351-1	
M39012/17B0008		331351	
M39012/19-0102		221313-2	
M39012/19B0003		1-331693-1	
M39012/19B0007		331693	
M39012/26B0005		225550-2	
M39012/26B0006		225550-6	
M39012/26B0007		225550-3	
M39012/26B0016		225550-1	
M39012/27B0005		225551-2	
M39012/27B0006		225551-6	
M39012/27B0015		225551-5	
M39012/27B0016		225551-1	
M39012/29B0005		225348-2	
M39012/55-3006	2031-8006-92	1051757-1	
M39012/55-3007	2031-8007-92	1051759-1	
M39012/55-3009	2031-8009-92	1051762-1	
M39012/55-3025	2031-5102-00 2031-5102-02 2031-8025-92	 1051780-1	1051686-1 1051687-1
M39012/55-3026	2031-5012-00 2031-5012-02 2031-8026-92	 1051782-1	1051664-1 1051665-1
M39012/55-3028	2031-5011-00 2031-5011-02 2031-8028-92	 1051785-1	1051660-1 1051661-1
M39012/55-3029	2031-8029-92	1051787-1	
M39012/55-3106	2031-8106-92	1051789-1	
M39012/55-3107	2031-8107-92	1051791-1	
M39012/55-3109	2031-8109-92	1051794-1	
M39012/55-3125	2031-5102-00 2031-5102-02 2031-8125-92	 1051810-1	1051686-1 1051687-1
M39012/55-3126	2031-5012-00 2031-5012-02 2031-8126-92	 1051812-1	1051664-1 1051665-1
M39012/55-3128	2031-5011-00 2031-5011-02 2031-8128-92	 1051815-1	1051660-1 1051661-1
M39012/55-3129	2031-8129-92	1051816-1	
M39012/55-3502	2031-5011-00 2031-5011-02 2031-8052-92	 1051788-1	1051660-1 1051661-1
M39012/55-3602	2031-5011-00 2031-5011-02 2031-8162-92	 1051817-1	1051660-1 1051661-1
M39012/55B3011	2031-5102-00 2031-5102-02 2031-8011-92	 1051764-1	1051686-1 1051687-1
M39012/55B3012	2031-5102-00 2031-5102-02 2031-8012-92	 1051766-1	1051664-1 1051665-1

Military Part Number	Reference Part Number (Ref. Only)	TE Part No.	COTS Part No.
M39012/55B3014	2031-5055-00 2031-8014-92	 1051768-1	1051678-1
M39012/55B3015	2031-5005-00 2031-5005-02 2031-8015-92	 1051769-1	1051650-1 1051651-1
M39012/55B3016	2031-5005-00 2031-5005-02 2031-8016-92	 1051770-1	1051650-1 1051651-1
M39012/55B3019		225532-4	221117-2
M39012/55B3019	2031-5012-00 2031-5012-02 2031-8019-92	 1056413-1	1051664-1 1051665-1
M39012/55B3021		225532-1	
M39012/55B3022		225532-3	221117-1
M39012/55B3023		1-225532-0	
M39012/55B3024		225532-9	
M39012/55B3112	2031-5012-00 2031-5012-02 2031-8112-92	1051664-1 1051665-1 1051797-1	
M39012/55B3113	2031-8113-92	1051798-1	
M39012/55B3114	2031-5055-00 2031-8114-92	1051678-1 1051799-1	
M39012/55B3115	2031-5005-00 2031-5005-02 2031-8115-92	1051650-1 1051651-1 1051800-1	
M39012/55B3116	2031-5005-00 2031-5005-02 2031-8116-92	1051650-1 1051651-1 1051801-1	
M39012/55B3119	2031-5012-00 2031-5012-02 2031-8119-92	 1051804-1	1051664-1 1051665-1
M39012/56-3006	2037-8006-92	1052149-1	
M39012/56-3007	2037-5006-00 2037-5006-02 2037-8007-92	 1052151-1	1052066-1 1052067-1
M39012/56-3008	2037-8008-92	1052152-1	
M39012/56-3009	2037-5005-00 2037-5005-02 2037-8009-92	 1052154-1	1052062-1 1052063-1
M39012/56-3010	2037-5005-00 2037-5005-02 2037-8010-92	 1052155-1	1052062-1 1052063-1
M39012/56-3025	2037-5100-00 2037-5100-02 2037-8025-92	 1052171-1	1052097-1 1052098-1
M39012/56-3026	2037-5008-00 2037-5008-02 2037-8026-92	 1052173-1	1052075-1 1052076-1
M39012/56-3027	2037-8027-92	1052174-1	
M39012/56-3028	2037-5007-00 2037-5007-02 2037-8028-92	 1052176-1	1052071-1 1052072-1
M39012/56-3029	2037-5056-00 2037-8029-92	 1052177-1	1052092-1
M39012/56-3106	2037-8106-92	1052179-1	
M39012/56-3107	2037-5006-00 2037-5006-02 2037-8107-92	 1052181-1	1052066-1 1052067-1
M39012/56-3108	2037-8108-92	1052182-1	
M39012/56-3109	2037-5005-00 2037-5005-02 2037-8109-92	 1052184-1	1052062-1 1052063-1
M39012/56-3110	2037-5005-00 2037-5005-02 2037-8110-92	 1052185-1	1052062-1 1052063-1
M39012/56-3125	2037-5100-00 2037-5100-02 2037-8125-92	 1052201-1	1052097-1 1052098-1
M39012/56-3126	2037-5008-00 2037-5008-02 2037-8126-92	 1052203-1	1052075-1 1052076-1
M39012/56-3127	2037-8127-92	1052204-1	

COTS part numbers are commercial equivalents and are not military qualified.

Dimensions are shown for reference purposes only. Specifications subject to change.

Dimensions are in millimeters unless otherwise specified.

USA: +1 800 522 6752
Asia Pacific: +86 0 400 820 6015
UK: +44 800 267 666

For additional support numbers please visit www.te.com

Cross Reference (Continued)

Military Part Number	Reference Part Number (Ref. Only)	TE Part No.	COTS Part No.
M39012/56-3128	2037-5007-00 2037-5007-02 2037-8128-92	 1052206-1	1052071-1 1052072-1
M39012/56-3129	2037-5056-00 2037-8129-92	 1052207-1	1052092-1
M39012/56-3502	2037-5007-00 2037-5007-02 2037-8052-92	 1052178-1	1052071-1 1052072-1
M39012/56-3602	2037-5007-00 2037-5007-02 2037-8162-92	 1086723-1	1052071-1 1052072-1
M39012/56B3011	2037-5008-00 2037-5008-02 2037-8011-92	 1052156-1	1052075-1 1052076-1
M39012/56B3012	2037-8012-92	1052157-1	
M39012/56B3013	2037-8013-92	1052158-1	
M39012/56B3014	2037-5056-00 2037-8014-92	 1052159-1	1052092-1
M39012/56B3015	2037-5007-00 2037-5007-02 2037-8015-92	 1052160-1	1052071-1 1052072-1
M39012/56B3016	2037-5007-00 2037-5007-02 2037-8016-92	 1052161-1	1052071-1 1052072-1
M39012/56B3017	2037-5056-00 2037-8017-92	 1052162-1	1052092-1
M39012/56B3018	2037-5100-00 2037-5100-02 2037-8018-92	 1052163-1	1052097-1 1052098-1
M39012/56B3019	2037-5008-00 2037-5008-02 2037-8019-92	 1052165-1	1052075-1 1052076-1
M39012/56B3020	2037-8020-92	1052166-1	
M39012/56B3021	2037-5056-00 2037-8021-92	 1052167-1	1052092-1
M39012/56B3022		225609-3	
M39012/56B3022	2037-5007-00 2037-5007-02 2037-8022-92	 1052168-1	1052071-1 1052072-1
M39012/56B3023	2037-5007-00 2037-5007-02 2037-8023-92	 1052169-1	1052071-1 1052072-1
M39012/56B3024	2037-5056-00 2037-8024-92	 1052170-1	1052092-1
M39012/56B3111	2037-5100-00 2037-5100-02 2037-8111-92	 1052186-1	1052097-1 1052098-1
M39012/56B3112	2037-5008-02 2037-5008-00 2037-8112-92	 1052187-1	1052076-1 1052075-1
M39012/56B3113	2037-8113-92	1052188-1	
M39012/56B3114	2037-5056-00 2037-8114-92	 1052189-1	1052092-1
M39012/56B3115	2037-5007-00 2037-5007-02 2037-8115-92	 1052190-1	1052071-1 1052072-1
M39012/56B3116	2037-5007-00 2037-5007-02 2037-8116-92	 1052191-1	1052071-1 1052072-1
M39012/56B3117	2037-5056-00 2037-8117-92	 1052192-1	1052092-1
M39012/56B3118	2037-5008-00 2037-5008-02 2037-8118-92	 1052193-1	1052075-1 1052076-1
M39012/56B3119	2037-5008-00 2037-5008-02 2037-8119-92	 1052194-1	1052075-1 1052076-1
M39012/56B3120	2037-8120-92	1052195-1	
M39012/56B3121	2037-5056-00 2037-8121-92	 1052196-1	1052092-1
M39012/56B3122	2037-5007-00 2037-5007-02 2037-8122-92	 1052197-1	1052071-1 1052072-1
M39012/56B3123	2037-5007-00 2037-5007-02 2037-8123-92	 1052198-1	1052071-1 1052072-1
M39012/56B3124	2037-5056-00 2037-8124-92	 1052199-1	1052092-1
M39012/57-3025	2032-5026-00 2032-5026-02 2032-8025-92	 1051918-1	1051868-1 1051869-1
M39012/57-3026	2032-5003-02 2032-8026-92	 1051919-1	1051855-1
M39012/57-3027	2032-8027-92	1051920-1	
M39012/57-3028	2032-5007-00 2032-8028-92	 1051921-1	1051861-1
M39012/57-3029	2032-5021-00 2032-8029-92	 1051922-1	1051866-1
M39012/57-3502	2032-5007-00 2032-8052-92	 1051923-1	1051861-1
M39012/57B3011	2032-5026-00 2032-5026-02 2032-8011-92	 1051904-1	1051868-1 1051869-1
M39012/57B3012	2032-5003-02 2032-8012-92	 1051905-1	1051855-1
M39012/57B3013	2032-8013-92	1051906-1	
M39012/57B3014	2032-5021-00 2032-8014-92	 1051907-1	1051866-1
M39012/57B3015	2032-5007-00 2032-8015-92	 1051908-1	1051861-1
M39012/57B3016	 2032-8016-92	 1051909-1	1051861-1
M39012/57B3017	2032-5021-00 2032-8017-92	 1051910-1	1051866-1
M39012/57B3018	2032-5026-00 2032-5026-02 2032-8018-92	 1051911-1	1051868-1 1051869-1
M39012/57B3019	2032-5003-02 2032-8019-92	 1051912-1	1051855-1
M39012/57B3020	2032-8020-92	1051913-1	
M39012/57B3021	2032-5021-00 2032-8021-92	 1051914-1	1051866-1
M39012/57B3022	2032-5007-00 2032-8022-92	 1051915-1	1051861-1
M39012/57B3023	2032-5007-00 2032-8023-92	 1051916-1	1051861-1
M39012/57B3024	2032-5021-00 2032-8024-92	 1051917-1	1051866-1
M39012/58-3025	2036-5016-00 2036-8025-92	 1052046-1	1052030-1
M39012/58-3026	2036-5004-02 2036-8026-92	 1052047-1	1052024-1
M39012/58-3027	2036-8027-92	1052048-1	
M39012/58-3028	2036-8028-92	1052049-1	
M39012/58-3029	2036-8029-92	1052050-1	
M39012/58-3502	2036-8052-92	1052051-1	
M39012/58B3011	2036-5004-02 2036-8011-92	 1052042-1	1052024-1
M39012/58B3012	2036-5004-02 2036-8012-92	 1254028-1	1052024-1
M39012/58B3013	2036-8013-92	1484499-1	
M39012/58B3014	2036-8014-92	1484500-1	
M39012/58B3015	2036-8015-92	1052043-1	
M39012/58B3016	2036-8016-92	1484501-1	
M39012/58B3017	2036-5014-02 2036-8017-92	 1484502-1	1087843-1
M39012/58B3018	2036-5016-00 2036-8018-92	 1052044-1	1052030-1
M39012/58B3019	2036-5004-02 2036-8019-92	 1484503-1	1052024-1
M39012/58B3020	2036-8020-92	1484504-1	
M39012/58B3021	2036-5014-02 2036-8021-92	 1484505-1	1087843-1

COTS part numbers are commercial equivalents and are not military qualified.

Cross Reference (Continued)

Military Part Number	Reference Part Number (Ref. Only)	TE Part No.	COTS Part No.
M39012/58B3022	2036-8022-92	1052045-1	
M39012/58B3023	2036-8023-92	1484506-1	
M39012/58B3024	2036-5014-02 2036-8024-92	 1484507-1	1087843-1
M39012/59-3025	2034-5031-00 2034-5031-02 2034-8025-92	 1051992-1	1051950-1 1051951-1
M39012/59-3026	2034-5005-00 2034-8026-92	 1051994-1	1051933-1
M39012/59-3027	2034-8027-92	1051995-1	
M39012/59-3028	2034-8028-92	1051996-1	
M39012/59-3029	2034-8029-92	1051997-1	
M39012/59-3502	2034-8052-92	1051999-1	
M39012/59B3011	2034-5031-00 2034-5031-02 2034-8011-92	 1362216-1	1051950-1 1051951-1
M39012/59B3012	2034-5005-00 2034-8012-92	 1051986-1	1051933-1
M39012/59B3013	2034-8013-92	1083993-1	
M39012/59B3014	2034-8014-92	1331293-1	
M39012/59B3015	2034-8015-92	1253627-1	
M39012/59B3016	2034-8016-92	1221165-1	
M39012/59B3017	2034-8017-92	1484542-1	
M39012/59B3018	2034-5031-00 2034-5031-02 2034-8018-92	 1051987-1	1051950-1 1051951-1
M39012/59B3019	2034-5005-00 2034-8019-92	 1051988-1	1051933-1
M39012/59B3020	2034-8020-92	1484543-1	
M39012/59B3021	2034-8021-92	1087842-1	
M39012/59B3022	2034-8022-92	1051989-1	
M39012/59B3023	2034-8023-92	1051990-1	
M39012/59B3024	2034-8024-92	1051991-1	
M39012/60-3001	2052-0000-00 2052-0000-02 2052-8001-92	 1052924-1	1052421-1 1052422-1
M39012/60-3002	2052-1300-00 2052-1300-02 2052-8002-92	 1052926-1	1052533-1 1052534-1
M39012/61-3001	2056-8011-92	1053118-1	
M39012/61-3002	2058-0000-00 2058-8012-92	 1484516-1	1053133-1
M39012/79-3007	2001-8007-92	1050781-1	
M39012/79-3008	2001-8008-92	1050783-1	
M39012/79-3107	2001-8107-92	1050789-1	
M39012/79-3108	2001-8108-92	1050790-1	
M39012/79-3207		228639-3	
M39012/79-3307		228639-1	
M39012/79-3308		228634-1	
M39012/79-AF867286-2		221447-1	
M39012/79B3001	2001-5032-00 2001-5032-02 2001-8001-92	 1050774-1	1050547-1 1050548-1
M39012/79B3002	2001-8002-92	1058590-1	
M39012/79B3002	2001-5003-00 2001-5003-02 2001-8002-92	 1050776-1	1050524-1 1050525-1
M39012/79B3003	2001-8003-92	1050777-1	
M39012/79B3003	2001-5385-02 2001-8991-92	 1050813-1	1050598-1
M39012/79B3003	2001-8203-92	1089686-1	
M39012/79B3004	2001-8004-92	1050779-1	
M39012/79B3004	2001-8204-92	1050792-1	
M39012/79B3101	2001-5032-00 2001-5032-02 2001-8101-92	 1050785-1	1050547-1 1050548-1
M39012/79B3102	2001-5003-00 2001-5003-02 2001-8102-92	 1050786-1	1050524-1 1050525-1
M39012/79B3103		227868-1	
M39012/79B3103	2001-8103-92	1050787-1	
M39012/79B3103	2001-7685-02 2001-8303-92	 1050797-1	1050744-1
M39012/79B3103	2001-5385-02 2001-8981-92	 1050812-1	1050598-1
M39012/79B3104		227743-1	
M39012/79B3104	2001-8104-92	1050788-1	
M39012/79B3104	2001-8304-92	1050799-1	
M39012/80-3005	2007-5055-00 2007-5055-02 2007-8005-92	 1051165-1	1051113-1 1051114-1
M39012/80-3006	2007-5054-00 2007-5054-02 2007-8006-92	 1051166-1	1051109-1 1051110-1
M39012/80-3007	2007-5055-00 2007-5055-02 2007-8007-92	 1051168-1	1051113-1 1051114-1
M39012/80-3008	2007-5054-00 2007-5054-02 2007-8008-92	 1051170-1	1051109-1 1051110-1
M39012/80-3105	2007-5054-00 2007-5054-02 2007-8105-92	 1051175-1	1051109-1 1051110-1
M39012/80-3106	2007-5055-00 2007-5055-02 2007-8106-92	 1051176-1	1051113-1 1051114-1
M39012/80-3107	2007-5054-00 2007-5054-02 2007-8107-92	 1051177-1	1051109-1 1051110-1
M39012/80-3108	2007-8108-92	1051178-1	
M39012/80-3207		228583-3	
M39012/80-3207		228583-5	
M39012/80-3307		228583-1	
M39012/80-3308		228626-1	
M39012/80-3308		228626-5	
M39012/80B3003	2007-8003-92	1051163-1	
M39012/80B3004	2007-8004-92	1051164-1	
M39012/80B3103	2007-5055-00 2007-5055-02 2007-8103-92	 1051173-1	1051113-1 1051114-1
M39012/80B3104	2007-5054-00 2007-5054-02 2007-8104-92	 1051174-1	1051109-1 1051110-1
M39012/81-3005	2002-5016-00 2002-8005-90	 1050926-1	1050859-1
M39012/81-3006	2002-5015-00 2002-8006-90	 1050928-1	1050854-1
M39012/81-3007	2002-8007-92	1050929-1	
M39012/81-3008	2002-8008-92	1050931-1	
M39012/81-3207	2002-8207-92	1050934-1	
M39012/81-3208	2002-8208-92	1050935-1	
M39012/81B3001	2002-5016-00 2002-8001-90	 1050923-1	1050859-1
M39012/81B3002	2002-5015-00 2002-8002-90	 1050924-1	1050854-1
M39012/82-3005	2006-5012-00 2006-8005-90	 1051091-1	1051049-1
M39012/82-3006	2006-7941-00 2006-8006-90	 1051092-1	1051081-1
M39012/82-3007	2006-8007-92	1051093-1	
M39012/82-3008	2006-8008-92	1051094-1	
M39012/82-3207	2006-8207-92	1051097-1	
M39012/82-3208	2006-8208-92	1051098-1	

COTS part numbers are commercial equivalents and are not military qualified.

Dimensions are shown for reference purposes only. Specifications subject to change.

Dimensions are in millimeters unless otherwise specified.

USA: +1 800 522 6752
Asia Pacific: +86 0 400 820 6015
UK: +44 800 267 666

For additional support numbers please visit www.te.com

Cross Reference (Continued)

Military Part Number	Reference Part Number (Ref. Only)	TE Part No.	COTS Part No.
M39012/82B3001	2006-5012-00 2006-8001-90	 1051087-1	1051049-1
M39012/82B3002	2006-7941-00 2006-8002-90	 1051088-1	1051081-1
M39012/83-3005	2004-7985-00 2004-8005-90	 1051026-1	1051018-1
M39012/83-3006	2004-7941-00 2004-8006-90	 1051027-1	1051013-1
M39012/83-3007	2004-8007-92	1051028-1	
M39012/83-3008	2004-8008-92	1051029-1	
M39012/83-3207	2004-8207-92	1051032-1	
M39012/83-3208	2004-7641-02 2004-8208-92	 1051033-1	1051005-1
M39012/83B3001	2004-7985-00 2004-8001-90	 1051022-1	1051018-1
M39012/83B3002	2004-7941-00 2004-8002-90	 1051023-1	1051013-1
M39012/92-3201	2001-8201-92	1050791-1	
M39012/92-3301		228635-1	
M39012/92-3301		228635-6	
M39012/92-3301	2001-8301-92	1050796-1	
M39012/92B3001	2001-8921-92	1050808-1	
M39012/92B3001	2001-8901-92	1050805-1	
M39012/92B3001	2001-8941-92	1484517-1	
M39012/92B3101		227531-1	
M39012/92B3101	2001-8911-92	1050807-1	
M39012/92B3101	2001-8931-92	1050809-1	
M39012/92B3101	2001-8951-92	1050810-1	
M39012/93-3001	2062-0000-00 2062-8001-90	 1053372-1	1053354-1
M39012/93-3002	2062-8002-90	1053374-1	
M39012/93-3003	2062-8003-90	1053376-1	
M39012/94-3001	2064-0000-00 2064-8001-90	 1053396-1	1053378-1
M39012/94-3002	2064-8002-90	1053398-1	
M39012/94-3003	2064-8003-90	1053400-1	
M55339/02-30001	2088-0000-00 2088-0000-02 2088-8001-92	 1055091-1	1055064-1 1055065-1
M55339/28-30001	2084-1100-00 2084-1100-02 2084-8001-92	 1054986-1	1054874-1 1054875-1
M55339/28-30002	2084-8002-92	1054988-1	
M55339/29-30001	2081-0000-00 2081-0000-02 2081-8001-92	 1053765-1	1053634-1 1053635-1
M55339/29-30101	2081-0000-00 2081-0000-02 2081-8101-92	 1053767-1	1053634-1 1053635-1
M55339/31-30001	2080-0000-00 2080-0000-02 2081-8001-92	 1053633-1	1053488-1 1053489-1
M83517/1-31001	2052-8003-92	1052928-1	
M83517/1-31002	2052-1658-02 2052-8004-92	 1052930-1	1052577-1
M83517/1-31003	2052-5636-00 2052-5636-02 2052-8005-92	 1052932-1	1052897-1 1052898-1
M83517/1-31004	2052-1618-00 2052-1618-02 2052-8006-92	 1052934-1	1052565-1 1052566-1
M83517/1-32001	2052-8003-90	1052927-1	
M83517/1-32002	2052-1658-02 2052-8004-90	 1052929-1	1052577-1
M83517/1-32003	2052-5636-00 2052-5636-02 2052-8005-90	 1052931-1	1052897-1 1052898-1
M83517/1-32004	2052-1618-00 2052-1618-02		1052565-1 1052566-1
	2052-8006-90	1052933-1	
M83517/2-31001	2051-8001-92	1052409-1	
M83517/2-31002	2051-8002-92	1052411-1	
M83517/2-31003	2051-8003-92	1052413-1	
M83517/2-31004	2051-8004-92	1052415-1	
M83517/2-32001	2051-8001-90	1052408-1	
M83517/2-32002	2051-8002-90	1052410-1	
M83517/2-32003	2051-8003-90	1052412-1	
M83517/2-32004	2051-8004-90	1052414-1	
M83517/3-31001	2052-1650-02 2052-8007-92	 1052936-1	1251095-1
M83517/3-31002	2052-8008-92	1052938-1	
M83517/3-31003	2052-8009-92	1052940-1	
M83517/3-31004	2052-8010-92	1052942-1	
M83517/3-31005	2052-1612-02 2052-8011-92	 1052944-1	1052563-1
M83517/3-31006	2052-8012-92	1052946-1	
M83517/3-31007	2052-8013-92	1052948-1	
M83517/3-32001	2052-1612-02 2052-8007-90	 1052935-1	1052563-1
M83517/3-32002	2052-8008-90	1052937-1	
M83517/3-32003	2052-8009-90	1052939-1	
M83517/3-32004	2052-8010-90	1052941-1	
M83517/3-32005	2052-1612-02 2052-8011-90	 1052943-1	1052563-1
M83517/3-32006	2052-8012-90	1052945-1	
M83517/3-32007	2052-8013-90	1052947-1	
M83517/4-31001	2052-8014-92	1052950-1	
M83517/4-31002	2052-5674-00 2052-5674-02 2052-8015-92	 1052952-1	1052901-1 1052902-1
M83517/4-31003	2052-8016-92	1052954-1	
M83517/4-31004	2052-1215-00 2052-1215-02 2052-8017-92	 1052956-1	1052527-1 1052528-1
M83517/4-31005	2052-1201-00 2052-1201-02 2052-8018-92	 1052958-1	1052522-1 1052523-1
M83517/4-32001	2052-8014-90	1052949-1	
M83517/4-32002	2052-5674-00 2052-5674-02 2052-8015-90	 1052951-1	1052901-1 1052902-1
M83517/4-32003	2052-8016-90	1052953-1	
M83517/4-32004	2052-1215-00 2052-1215-02 2052-8017-90	 1052955-1	1052527-1 1052528-1
M83517/4-32005	2052-1201-00 2052-1201-02 2052-8018-90	 1052957-1	1052522-1 1052523-1
M83517/5-31001	2051-8005-92	1052417-1	
M83517/5-32002	2051-8005-90	1052416-1	
M83517/6-31001	2066-8001-92	1053423-1	
M83517/6-31002	2066-1403-00 2066-8002-92	 1053425-1	1053415-1
M83517/6-32001	2066-8001-90	1053422-1	
M83517/6-32002	2066-1403-00 2066-8002-90	 1053424-1	1053415-1
M83517/7-31001	2067-8001-92	1053429-1	
M83517/7-31002	2067-8002-92	1053431-1	
M83517/7-32001	2067-8001-90	1053428-1	
M83517/7-32002	2067-8002-90	1053430-1	
M83517/8-31001	2068-5156-00 2068-8001-92	 1053451-1	1053438-1
M83517/8-31002	2068-8002-92	1053453-1	
M83517/8-32001	2068-5156-00 2068-8001-90	 1053450-1	1053438-1

COTS part numbers are commercial equivalents and are not military qualified.

Cross Reference (Continued)

Military Part Number	Reference Part Number (Ref. Only)	TE Part No.	COTS Part No.
M83517/8-32002	2068-8002-90	1053452-1	
M83517/9-31001	2070-8001-92	1053476-1	
M83517/9-31002	2070-5068-02 2070-8002-92	 1053478-1	1053465-1
M83517/9-31003	2070-5069-02 2070-8003-92	 1053480-1	1053467-1
M83517/9-31004	2070-8004-92	1053482-1	
M83517/9-32001	2070-8001-90	1053475-1	
M83517/9-32002	2070-5068-02 2070-8002-90	 1053477-1	1053465-1
M83517/9-32003	2070-5069-02 2070-8003-90	 1053479-1	1053467-1
M83517/9-32004	2070-8004-90	1053481-1	
M83517/10-31001	2052-3359-02 2052-8019-92	 1052959-1	1052646-1
M83517/10-31003	2052-3358-02		1052643-1

Military Part Number	Reference Part Number (Ref. Only)	TE Part No.	COTS Part No.
	2052-8021-92	1052962-1	
M83517/10-31004	2052-8023-92	1052963-1	
M83517/10-31005	2052-8023-92	1052963-1	
M83517/10-31006	2052-8024-92	1484518-1	
M83517/10-31015	2052-3358-02 2052-8033-92	 1484519-1	1052643-1
M83517/10-31016	2052-8034-92	1484520-1	
M83517/10-32001	2052-3359-02 2052-8019-90	 1484521-1	1052646-1
M83517/10-32003	2052-3358-02 2052-8021-90	 1052961-1	1052643-1
M83517/10-32005	2052-8023-90	1484522-1	
M83517/10-32006	2052-8024-90	1484523-1	
M83517/10-32015	2052-8033-90	1484524-1	
M83517/10-32016	2052-8034-90	1484525-1	

DSCC Cross Reference

DSCC Part No.	Reference Part Number (Ref. Only)	TE Part No.	COTS Part No.
84149SSG	2001-5397-02	1050605-1	
84149SSG-1	2001-5557-02 2001-5003-00 2001-5003-02	1050629-1	 1050524-1 1050525-1
84149SSGA	2001-5431-02	1050609-1	
84149SSGA-1	2001-5558-02 2001-7985-00 2001-7985-02	1050631-1	 1050769-1 1050770-1
85022SSG	2006-5151-00	1051063-1	
85022SSG-1	2006-5192-00 2006-5013-00	1221162-1	 1051052-1
85022SSGA	2006-5150-00	1051062-1	
85022SSGA-1	2006-5193-00 2006-5010-00	1051067-1	 1051046-1
85037SSG	2007-5115-02 2007-5054-00 2007-5054-02	1051119-1	 1051109-1 1051110-1
85037SSGA	2007-5116-02 2007-5055-00 2007-5055-02	1051120-1	 1051113-1 1051114-1
86116ZSG	1001-5045-92	1045358-1	
86117ZSG	1004-5005-90	1045398-1	
86118ZSG	1007-5015-92	1045418-1	

DSCC Part No.	Reference Part Number (Ref. Only)	TE Part No.	COTS Part No.
86119ZSG	1031-5031-92	1045486-1	
86120ZSG	1037-5032-92	1045517-1	
94008ZCG-2	2902-5005-62	1056521-1	
94008ZCG-1	2902-5006-62	1056522-1	
94008ZCG-4	2908-5006-62	1056550-1	
94008ZCG-3	2908-5007-62	1056551-1	
94007ZCG-1	2980-5004-62	1056703-1	
94007ZCG-2		1757023-1	
8501814FP-1	3180-4034-02	1057848-1	
8501814FP-2	3180-4036-02	1080294-1	
8604412SP-1	3081-4002-02	1057371-1	
8604412SP-4	3082-4031-02	1057403-1	
8503812FP-1	3080-4010-02	1057354-1	
8503812FP-2	3080-4015-02	1057357-1	
8503812FP-3	3084-4001-00	1057465-1	
8503812FP-4	3082-4028-02	1057402-1	
8503812FP-5	3082-4029-02	1252992-1	
8503812FP-6	3080-4019-02	1057359-1	
8503812FP-7	3080-4020-02	1087866-1	

Cheminax Coaxial Cables Cross Reference

	Cable to RF Part Numbers		
	5024A3314	5020A1611	5030L1134
SMA Plug	1996810-1	1996811-1	1996812-1
SMA R/A Plug	1996813-1	1996814-1	1996815-1
SMA BHD Jack	1996816-1	1996817-1	1996818-1
BNC Plug	1996819-1	1996820-1	1996821-1
BNC BHD Jack	1996822-1	1996823-1	1996824-1
TNC Plug	1996825-1	1996826-1	1996827-1
TNC BHD Jack	1996828-1	1996829-1	1996830-1

COTS part numbers are commercial equivalents and are not military qualified.

Dimensions are shown for reference purposes only. Specifications subject to change.

Dimensions are in millimeters unless otherwise specified.

USA: +1 800 522 6752
Asia Pacific: +86 0 400 820 6015
UK: +44 800 267 666

For additional support numbers please visit www.te.com

NANONICS Coaxial Connectors Introduction

The NANONICS 50 ohm coaxial connector system combines the benefits of the rectangular DUALOBE connectors while offering the flexibility to terminate up to nine coaxial contacts within the same metal connector housing. Furthermore, with this unique design, five signal contacts, terminated with 30 AWG or smaller discrete wire, can also be integrated into this connector package. These connectors are typically used in applications with frequencies up to 20 GHz.

RG-178 coax coaxial cable is the standard cable used on these connectors. The receptacle coax connector is also available in a horizontal surface mount configuration allowing for wire to board applications. Harness assemblies and custom configurations can also be accommodated.

Specifications

Technical and Performance Data

Electrical

Contact Resistance — .003 - .008 ohms

Current Rating — 1 amp max. per contact

Dielectric Withstanding Voltage — Volts RMS 60 Hz at room ambient conditions. At sea level 500V. At 70,000 ft. 150V.

Insulation Resistance — 5000 megohms min. (@ 500 VDC) at room ambient conditions.

Magnetic Permeability — 2 mu max.

Temperature Range — -55˚C to +125˚C

Outer Coaxial Contacts — BeCu Alloy plated with gold per MIL-G-45204 over nickel

Dielectric Insert — PTFE

Braid Termination — Soldered to outer coaxial contacts with Sn63Pb37 solder

Backpotting — Standard for wire terminations

Catalog 1308940
Revised 9-14

www.te.com

Dimensions are shown for reference purposes only. Specifications subject to change.

Dimensions are in millimeters unless otherwise specified.

USA: +1 800 522 6752
Asia Pacific: +86 0 400 820 6015
UK: +44 800 267 666

For additional support numbers please visit www.te.com

NANONICS Typical VSWR and Insertion Loss

Note: Insertion Loss of 30 AWG Coax Cable @ (50 Ohm) is approximately 1.0db/ft. @ 3 GHz. The connector system with 6" of coax on each side, is better than 1.5db @ 3 GHz.

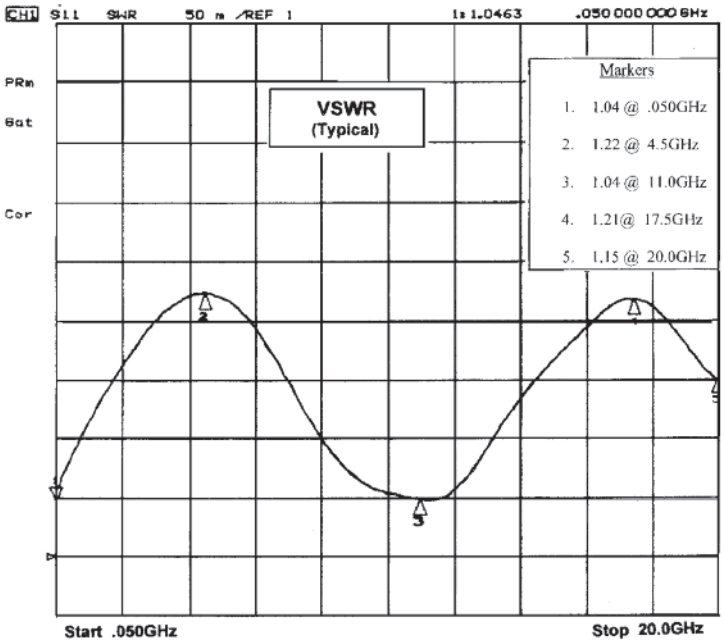

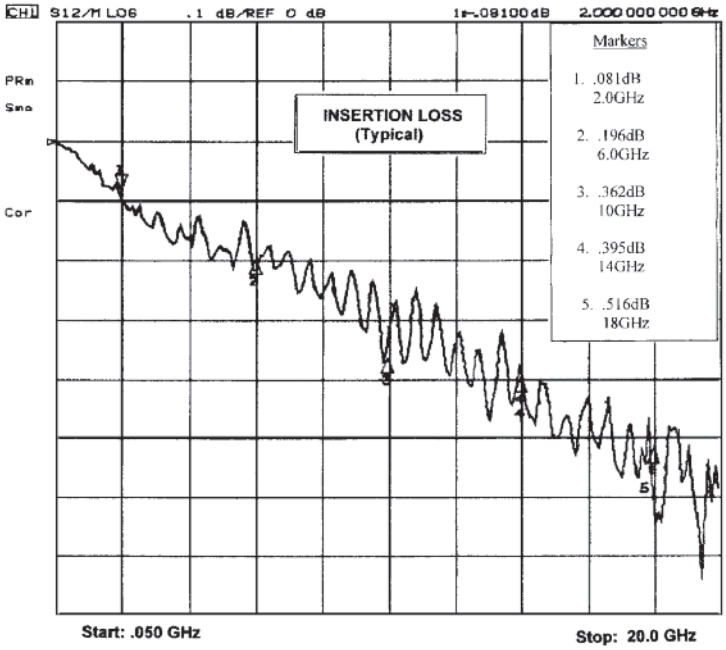

NANONICS 50 Ohm Coax Connectors

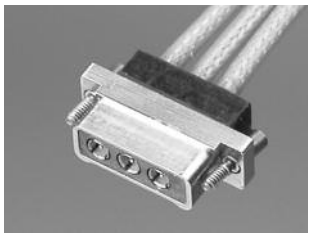

Plug

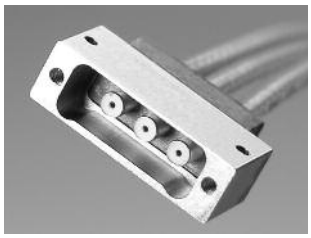

Receptacle

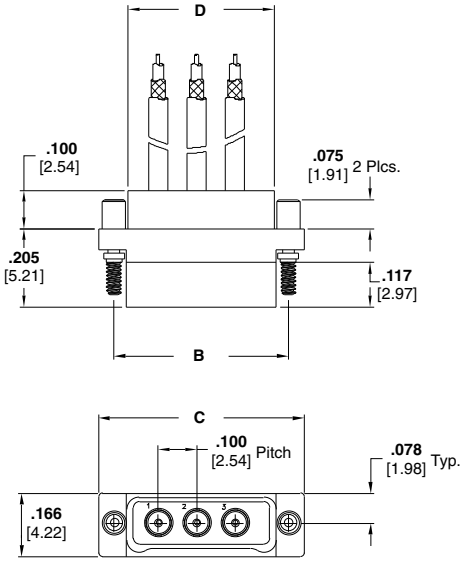

Plug Assembly
Drawing Number 1589070

Product Facts

- Metal Shell
- Standard Sizes: 1-9
- Factory wired to your specifications
- Contact TE Connectivity for custom configurations

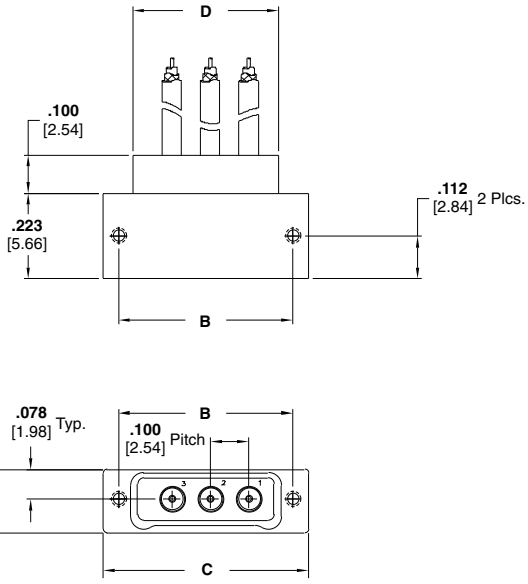

Receptacle Assembly
Drawing Number 1589071

Size	Dimensions			
	B	C	D	No. Coax
1	**0.254** [6.45]	**0.335** [8.51]	**0.180** [4.57]	1
2	**0.354** [8.99]	**0.435** [11.05]	**0.280** [7.11]	2
3	**0.454** [11.53]	**0.535** [13.59]	**0.380** [9.65]	3
4	**0.554** [14.07]	**0.635** [16.13]	**0.480** [12.19]	4
5	**0.654** [16.61]	**0.735** [18.67]	**0.580** [14.73]	5
6	**0.754** [19.15]	**0.835** [21.21]	**0.680** [17.27]	6
7	**0.854** [21.69]	**0.935** [23.75]	**0.780** [19.81]	7
8	**0.954** [24.23]	**1.035** [26.29]	**0.880** [22.35]	8
9	**1.054** [26.77]	**1.135** [28.83]	**0.980** [24.89]	9

Catalog 1308940
Revised 9-14

www.te.com

Dimensions are shown for reference purposes only. Specifications subject to change.

Dimensions are in millimeters unless otherwise specified.

USA: +1 800 522 6752
Asia Pacific: +86 0 400 820 6015
UK: +44 800 267 666

For additional support numbers please visit www.te.com

Part Numbering Guideline for NANONICS 50 Ohm Coax Connectors

Coax Only Connectors - Wire Terminations

CX XXX XX 2 RG XXX X

Class/Type

CX Coax, 50 Ohm

Positions

010 1 Position
020 2 Position
030 3 Position
040 4 Position
050 5 Position
060 6 Position
070 7 Position
080 8 Position
090 9 Position

Configuration

PC Plug
SC Receptacle

Conductor Size

2 30 AWG

Conductor Type

RG RG 178 Coaxial Cable

Conductor Length

XXX Three numbers only, length is in inches (i.e. 012 = twelve inches)
CXX A “C” follwed by two numbers, length is in centimeters (i.e. C06 = 6 centimeters)
MXX An “M” followed by two numbers, length is in meters (i.e. M02 = 2 meters)

Threads/Jackscrews

Threads (Receptacles Only)	Jackscrews (Plugs Only)
N Thread for 1.0 mm Jackscrews	**M** 1.0 mm Non Captive Jackscrews
Q Thread for 1.2 mm Jackscrews	**N** 1.0 mm Captive Jackscrews
	Q 1.2 mm Captive Jackscrews

Catalog 1308940
Revised 9-14

www.te.com

Dimensions are shown for reference purposes only. Specifications subject to change.

Dimensions are in millimeters unless otherwise specified.

USA: +1 800 522 6752
Asia Pacific: +86 0 400 820 6015
UK: +44 800 267 666

For additional support numbers please visit www.te.com

NANONICS Horizontal SMT 50 Ohm Coax Connectors

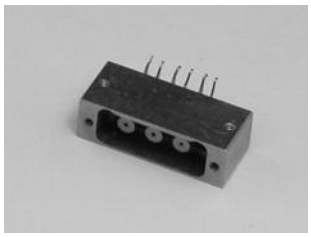

Surface Mount

Product Facts

- Metal Shell
- Standard Sizes: 1-9
- Factory wired to your specifications
- Contact TE Connectivity for custom configurations

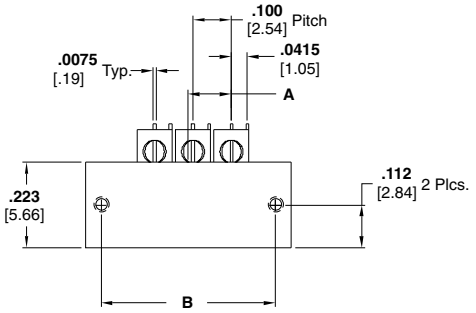

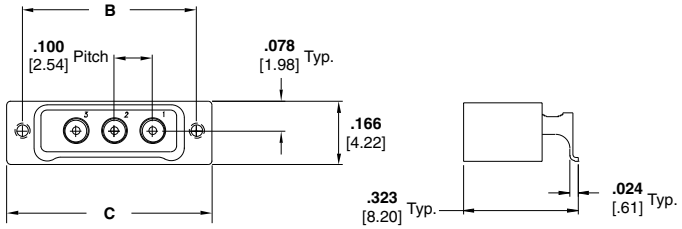

Receptacle Assembly
Drawing Number 1589072

Size	Dimensions			
	A	B	C	No. Coax
1	**0.0125** [.32]	**0.254** [6.45]	**0.335** [8.51]	1
2	**0.0625** [1.59]	**0.354** [8.99]	**0.435** [11.05]	2
3	**0.1125** [2.86]	**0.454** [11.53]	**0.535** [13.59]	3
4	**0.1625** [4.13]	**0.554** [14.07]	**0.635** [16.13]	4
5	**0.2125** [5.40]	**0.654** [16.61]	**0.735** [18.67]	5
6	**0.2625** [6.67]	**0.754** [19.15]	**0.835** [21.21]	6
7	**0.3125** [7.94]	**0.854** [21.69]	**0.935** [23.75]	7
8	**0.3625** [9.21]	**0.954** [24.23]	**1.035** [26.29]	8
9	**0.4125** [10.48]	**1.054** [26.77]	**1.135** [28.83]	9

Catalog 1308940
Revised 9-14

www.te.com

Dimensions are shown for reference purposes only. Specifications subject to change.

Dimensions are in millimeters unless otherwise specified.

USA: +1 800 522 6752
Asia Pacific: +86 0 400 820 6015
UK: +44 800 267 666

For additional support numbers please visit www.te.com

Part Numbering Guideline for NANONICS Horizontal SMT 50 Ohm Coax Connectors

Coax Only Connectors - SMT Termination

CX XXX L2 X X

Class/Type

CX Coax, 50 ohm

Positions

010 1 Position
020 2 Position
030 3 Position
040 4 Position
050 5 Position
060 6 Position
070 7 Position
080 8 Position
090 9 Position

Configuration

L2 Receptacle, Horizontal SMT

Mounting Hardware

A 1.2 mm x .160”
H 1.0 mm x .160”

Jackscrew Threads

Threads

N Thread for 1.0 mm Jackscrews
Q Thread for 1.2 mm Jackscrews

Catalog 1308940
Revised 9-14

www.te.com

Dimensions are shown for reference purposes only. Specifications subject to change.

Dimensions are in millimeters unless otherwise specified.

USA: +1 800 522 6752
Asia Pacific: +86 0 400 820 6015
UK: +44 800 267 666

For additional support numbers please visit www.te.com

NANONICS 50 Ohm Coax with Mixed Signal Connectors

Plug

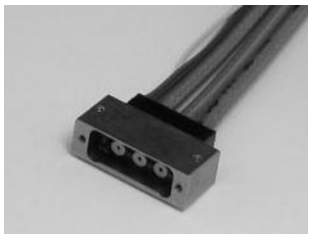

Receptacle

Product Facts

- Metal Shell
- Standard Sizes: 1-9 coaxial contacts with 5 signal contacts
- Factory wired to your specifications
- Contact TE Connectivity for custom configurations

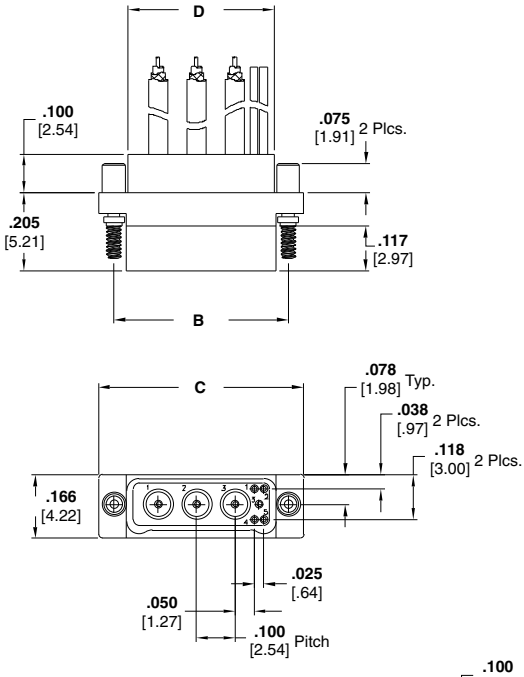

Plug Assembly
Drawing Number 1589068

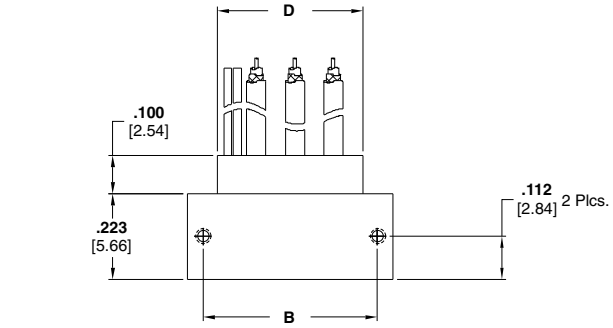

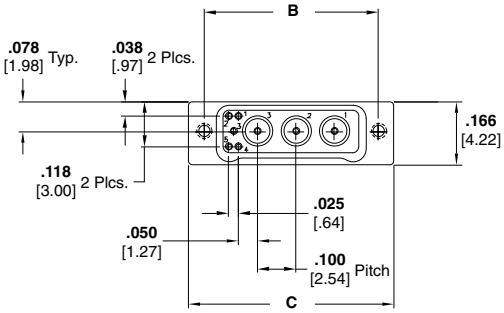

Receptacle Assembly
Drawing Number 1589069

Size	Dimensions			
	B	C	D	No. Coax
1	**0.254** [6.45]	**0.335** [8.51]	**0.180** [4.57]	1
2	**0.354** [8.99]	**0.435** [11.05]	**0.280** [7.11]	2
3	**0.454** [11.53]	**0.535** [13.59]	**0.380** [9.65]	3
4	**0.554** [14.07]	**0.635** [16.13]	**0.480** [12.19]	4
5	**0.654** [16.61]	**0.735** [18.67]	**0.580** [14.73]	5
6	**0.754** [19.15]	**0.835** [21.21]	**0.680** [17.27]	6
7	**0.854** [21.69]	**0.935** [23.75]	**0.780** [19.81]	7
8	**0.954** [24.23]	**1.035** [26.29]	**0.880** [22.35]	8
9	**1.054** [26.77]	**1.135** [28.83]	**0.980** [24.89]	9

Dimensions are shown for reference purposes only. Specifications subject to change.

Dimensions are in millimeters unless otherwise specified.

USA: +1 800 522 6752
Asia Pacific: +86 0 400 820 6015
UK: +44 800 267 666

For additional support numbers please visit www.te.com

Part Numbering Guideline for NANONICS 50 Ohm Coax with Mixed Signal Connectors

Coax w/ Mixed Signal Connectors - Wire Terminations

CX XXX XX 2 R X XXX X

Class/Type

CX Coax, 50 ohm

Positions

015 1 Position w/ 5 Signals
025 2 Position w/ 5 Signals
035 3 Position w/ 5 Signals
045 4 Position w/ 5 Signals
055 5 Position w/ 5 Signals
065 6 Position w/ 5 Signals
075 7 Position w/ 5 Signals
085 8 Position w/ 5 Signals
095 9 Position w/ 5 Signals

Configuration

PC Plug
SC Receptacle

Conductor Size

2 30 AWG 7 Strand

Conductor Type (Coax)

R RG-178 Coaxial Cable

Conductor Type (Signals)

C Color Coded PTFE
X White PTFE

Conductor Length

XXX Three numbers only, length is in inches (i.e. 012 = twelve inches)
CXX A “C” follwed by two numbers, length is in centimeters (i.e. C06 = 6 centimeters)
MXX An “M” followed by two numbers, length is in meters (i.e. M02 = 2 meters)

Threads/Jackscrew

Threads (Receptacles Only)	Jackscrews (Plugs Only)
N Thread for 1.0 mm Jackscrews	**M** 1.0 mm Non Captive Jackscrews
Q Thread for 1.2 mm Jackscrews	**N** 1.0 mm Captive Jackscrews
	Q 1.2 mm Captive Jackscrews

Catalog 1308940
Revised 9-14

www.te.com

Dimensions are shown for reference purposes only. Specifications subject to change.

Dimensions are in millimeters unless otherwise specified.

USA: +1 800 522 6752
Asia Pacific: +86 0 400 820 6015
UK: +44 800 267 666

For additional support numbers please visit www.te.com

Part Number Index Cross Reference

NANONICS Part Number	TE Part Number
Coax Only	
CX010PC2RG006N	0-1589070-1
CX010PC2RG018N	0-1589070-2
CX010PC2RG048Q	2-1589070-8
CX010PC2RG072N	0-1589070-3
CX010PC2RGC10Q	2-1589070-1
CX010SC2RG048Q	2-1589071-3
CX020PC2RG018N	0-1589070-4
CX020PC2RG048N	2-1589070-5
CX020PC2RG060N	1-1589070-8
CX020SC2RG012N	2-1589071-0
CX020SC2RG018N	2-1589071-5
CX020SC2RG024N	0-1589071-8
CX020SC2RG024Q	2-1589071-8
CX020SC2RG060N	2-1589071-2
CX030PC2RG006N	0-1589070-5
CX030PC2RG012	0-1589070-6
CX030PC2RG012N	0-1589070-7
CX030PC2RG018N	0-1589070-8
CX030PC2RG020Q	0-1589070-9
CX030PC2RG048N	2-1589070-4
CX030PC2RG060N	2-1589070-6
CX030SC2RG006N	0-1589071-3
CX030SC2RG012	0-1589071-4
CX030SC2RG012N	1-1589071-8
CX030SC2RG060N	2-1589071-1
CX040PC2RG012N	1-1589070-0
CX040PC2RG030N	1-1589070-1
CX040PC2RG039Q	3-1589070-7
CX040PC2RG060N	1-1589070-7
CX040SC2RG012	0-1589071-5
CX040SC2RG024N	0-1589071-7
CX050PC2RG006N	1-1589070-4
CX050SC2RG006N	1-1589071-9
CX060PC2RG012N	3-1589070-8
CX060PC2RG012Q	3-1589070-3
CX060PC2RG018N	3-1589070-5
CX060PC2RG036N	3-1589070-0
CX060PC2RG072N	3-1589070-1
CX060PC2RG144N	3-1589070-2
CX060PC2RGC10Q	2-1589070-0
CX060SC2RG012Q	2-1589071-6
CX070PC2RGC10Q	2-1589070-3
CX080PC2RG006N	2-1589070-2
CX080PC2RG012N	3-1589070-9
CX080PC2RG012Q	3-1589070-4
CX080PC2RG018N	3-1589070-6
CX080PC2RG024N	2-1589070-9
CX080PC2RG036N	1-1589070-5
CX080PC2RG048N	1-1589070-6
CX080PC2RG060N	1-1589070-9
CX080PC2RGC10N	2-1589070-7
CX080SC2RG012N	2-1589071-4
CX080SC2RG012Q	2-1589071-7
CX080SC2RG015N	1-1589071-7
CX080SC2RG024N	0-1589071-9
CX090PC2RG036N	1-1589070-2
CX090SC2RG036N	0-1589071-6

NANONICS Part Number	TE Part Number
Coax with Mixed Signals	
CX015PC2RC012	0-1589068-1
CX015PC2RC012N	0-1589068-5
CX015SC2RC012N	0-1589069-1
CX035PC2RC006N	0-1589068-2
CX035PC2RC018N	0-1589068-3
CX035SC2RC006N	0-1589069-2
CX035SC2RC018N	0-1589069-3
CX045PC2RC006N	0-1589068-4
CX045PC2RC036N	0-1589068-9
CX045PC2RC036Q	1-1589068-0
CX045SC2RC006N	0-1589069-4
CX045SC2RC006Q	0-1589069-7
CX055PC2RC006N	0-1589068-6
CX055SC2RC006N	0-1589069-5
CX095PC2RC006N	0-1589068-7
CX095PC2RC036N	0-1589068-8
CX095SC2RC006N	0-1589069-6

NANONICS Part Number	TE Part Number
Horizontal SMT Coax	
CX010L2AQ	1-1589072-3
CX010L2HN	0-1589072-1
CX020L2HN	1-1589072-2
CX030L23N	0-1589072-2
CX030L23Q	0-1589072-5
CX030L2HN	0-1589072-3
CX040L2AQ	1-1589072-0
CX040L2HN	1-1589072-6
CX050L23Q	0-1589072-6
CX050L2HN	0-1589072-9
CX060L2AQ	1-1589072-1
CX060L2HN	1-1589072-5
CX070L2AQ	1-1589072-4
CX080L2HN	0-1589072-4

Dimensions are shown for reference purposes only. Specifications subject to change.

Dimensions are in millimeters unless otherwise specified.

USA: +1 800 522 6752
Asia Pacific: +86 0 400 820 6015
UK: +44 800 267 666

For additional support numbers please visit www.te.com

MICRODOT Coaxial Connectors Introduction

Product Facts

- **Designed to accept 50, 70 and 93 ohm miniature coaxial cables**
- **Three types of connectors: Screw-on Series, Slide-on Series and Quick-Connect Series**
- **Temperature range — -85°F to +257°F [-65°C to +125°C] (with neoprene gasket or bend relief cap) -80°F to 392°F [-62°C to +200°C] (with silicone gasket or bend relief cap)**
- **Dielectric Withstanding Voltage — 1000 volts RMS at sea level**
- **Contact Resistance — 3 milliohms max., D.C.**
- **Captive Contacts — Terminated connector contacts captivated from movement in both directions**

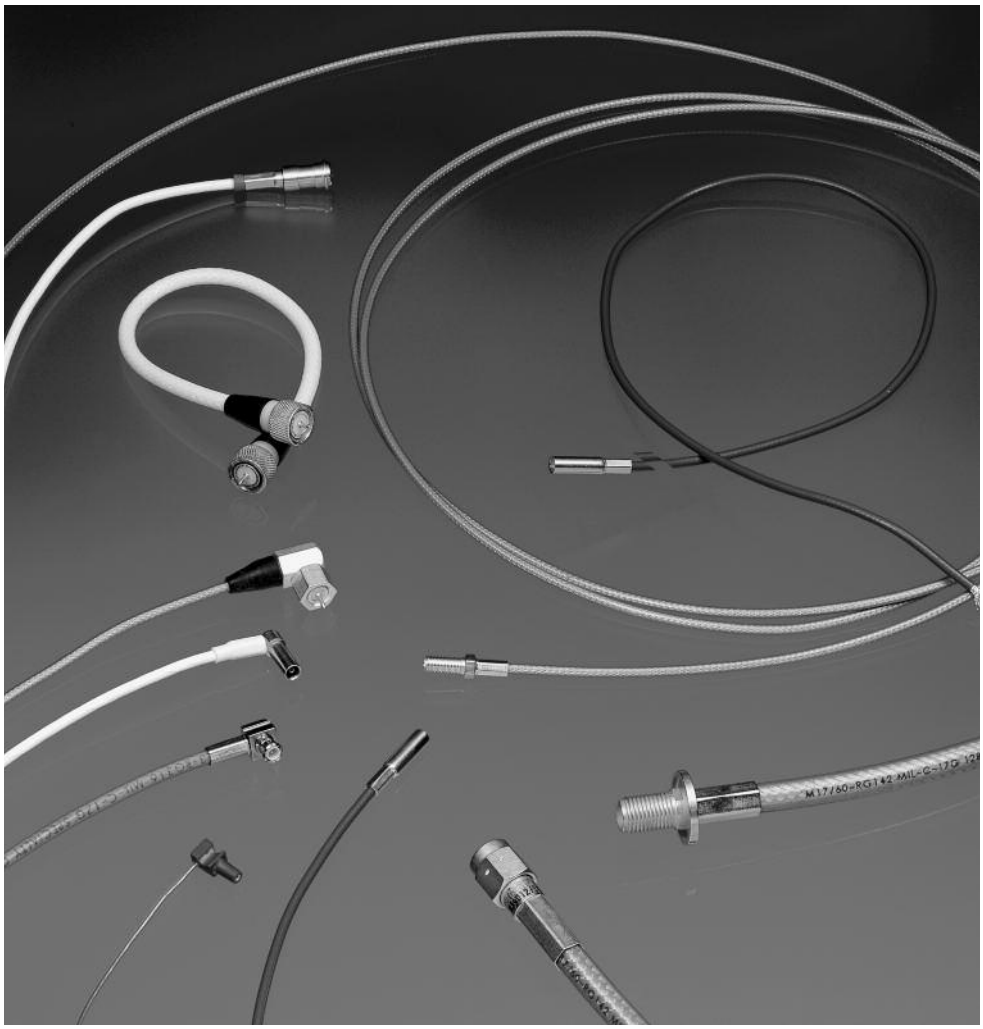

MICRODOT Standard Coaxial Connectors are designed to accept 50, 70, and 93 Ohm miniature coaxial cables. These connectors are available as Screw-On Series, Slide-On Series, or Quick-Connect Series. The Screw-On Series is intermateable with the Gold Plated Crimp Style Coaxial Connector Series and offers the dependability of a threaded coupling. For enhanced safety, choose connectors with wire holes.

Choose Slide-On Series for the fastest, most convenient mating and unmating.

The Quick-Connect Series offers the convenience of Slide-On coupling with added retention provided by a snap ring located on the jack/receptacle side.

Consult TE Connectivity for special cable accommodations and mounting features.

Catalog 1308940
Revised 9-14

www.te.com

Dimensions are shown for reference purposes only. Specifications subject to change.

Dimensions are in millimeters unless otherwise specified.

USA: +1 800 522 6752
Asia Pacific: +86 0 400 820 6015
UK: +44 800 267 666

For additional support numbers please visit www.te.com

MICRODOT Standard Connectors

Performance Data Summary
For Standard Connectors

Mechanical

Captive Contacts — Terminated connector contacts captivated from movement in both directions.

Cable Retention —
50 Ohm connectors, 15 lb. min.[1]
70 Ohm connectors, 25 lb. min.[1]
93 Ohm connectors, 35 lb. min.[1]

Recommended Coupling Torque (Threaded Interface) — 8 inch/pounds max.

Recommended Receptacle Mounting Torque (All Series) — 8 inch/pounds max.

Unmating Force (Slide-On Series) — 1-7 pounds.

Contact Protection (Unmated) — Pin contact protected by coupling nut (threaded series)[2] or by housing (Quick-Connect and Slide-On Series). Socket protected by insulator and housing.

Assembly Methods

Straight Plugs & Jacks —
Cable Inner Conductor — Soldered to contact.
Cable Shield — Crimped to jerk ring (solder optional).

Angle Plugs —
Cable Inner Conductor — Soldered to contact.
Cable Shield — Soldered to ring & housing.

Environmental

Temperature Range (Continuous Service) — -85°F to +257°F [-65°C to +125°C] (with Neoprene gasket or bend relief cap). -80°F to 392°F [-62°C to +200°C] (with Silicone gasket or bend relief cap).

Vibration[3,4] — MIL-STD-202, Method 204, Test condition B (15 G peak). No physical damage or electrical discontinuities in excess of 1 microsecond.

Shock[3,4] — MIL-STD-202, Method 213, Test Condition H. No physical damage or electrical discontinuity after shock.

Thermal Shock — MIL-STD-202, Method 107, Test Condition B.

Moisture Resistance[3] — MIL-STD-202, Method 106.

Salt Spray[3] — MIL-STD-202, Method 101, Test Condition B (48 hours).

Electrical

Impedance — Designed to be compatible with 50, 70, or 93 Ohm miniature coaxial cable.

Dielectric Withstanding Voltage — 1000 volts RMS at sea level.

Contact Resistance — 3 milliohms max., D.C.

Current Capacity — 3 amps, D.C.

Insulation Resistance — 5 x 10^3 Megohms min. @ 500 volts D.C.

Voltage Standing Wave Ratio[5] (VSWR) — Typical 50 Ohm series, 1.2 max. to 2 GHz.

Materials

Housing, Nut, Jerk Ring — Brass per ASTM-B-16.

Insulator — PTFE per ASTM-D-1710.

Pin Contact (Plugs) — Brass per ASTM-B-16.

Socket Contact (Jacks & Receptacles) — Beryllium Copper per ASTM-B-196.

Bend Relief Caps (Plugs & Jacks) — Neoprene or Silicone Rubber per ZZ-R-765.

Gaskets (Jacks & Receptacles) — Neoprene or Silicone Rubber per ZZ-R-765.

Lockwasher — #425 Bronze Alloy.

Plating

Contacts — Gold per MIL-G-45204, Type II, Grade C, Class 1.

Housing, Nut, Jerk Ring, Lockwasher — Silver per QQ-S-365, Type II, Grade A, .0002 [.005] min.

Notes:
[1]Termination to cables with foamed dielectrics excluded. Straight connector jerk rings must be soldered to cable shield.
[2]Pin protector required. See individual connector specifications.
[3]Screw-On Series, threaded interface.
[4]TE Connectivity recommends the use of safety wired connectors in vibration and shock environment. See individual specifications for connectors with safety wire holes.
[5]VSWR is a system specification. Where performance is critical, purchase TE cable assemblies with Screw-On or Quick-Connect Series connectors and specify VSWR testing and mating connector part number.

Catalog 1308940
Revised 9-14

www.te.com

Dimensions are shown for reference purposes only. Specifications subject to change.

Dimensions are in millimeters unless otherwise specified.

USA: +1 800 522 6752
Asia Pacific: +86 0 400 820 6015
UK: +44 800 267 666

For additional support numbers please visit www.te.com

MICRODOT Standard Connectors — Screw-On Series

Plug

S-50 Ohm Series	S-70 Ohm Series	S-93 Ohm Series
032-0021-0001	032-0010-0001	032-0011-0001
032-0023-0001	032-0022-0001	032-0017-0001
032-0025-0001	032-0067-0001	032-0066-0001
032-0033-0001	032-0078-0001	032-0071-0001
032-0097-0001	032-0222-0001	032-0092-0001
032-0098-0001	052-0092-0001	032-0099-0001
032-0155-0001		052-0200-0001
032-0156-0001		
052-0213-0001		
052-0235-0001		
052-0235-0003		
052-0370-0001		
052-0542-0001		

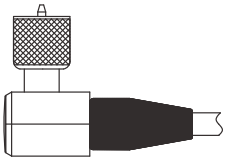

Right-Angle Plug

S-50 Ohm Series	S-70 Ohm Series	S-93 Ohm Series
032-0015-0001	032-0013-0001	032-0014-0001
052-0204-0001	052-0299-0001	032-0068-0001
052-0215-0001	052-0379-0001	032-0153-0001
052-0337-0001		052-0207-0001
		052-0298-0001
		052-0304-0022

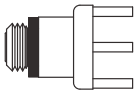

Printed Circuit Receptacle

S-50 Ohm Series	S-70 Ohm Series	S-93 Ohm Series
031-0059-0001	031-0069-0001	031-0067-0001
031-0062-0001		031-0080-0001
051-0450-0001		

Jack

S-50 Ohm Series	S-70 Ohm Series	S-93 Ohm Series
031-0034-0001	031-0036-0001	031-0037-0001
051-0467-0001	031-0090-0001	031-0088-0001

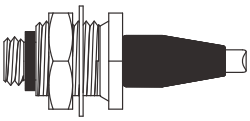

Bulkhead Jack

S-50 Ohm Series	S-70 Ohm Series	S-93 Ohm Series
031-0033-0001	031-0048-0001	031-0032-0001
		031-0089-0001

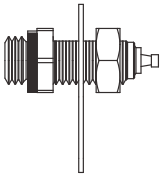

Receptacle

S-50 Ohm Series	S-70 Ohm Series	S-93 Ohm Series
031-0050-0001	031-0051-0001	031-0052-0001
051-0318-0001		

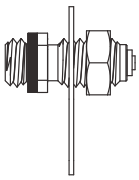

Receptacle

S-50 Ohm Series	S-70 Ohm Series	S-93 Ohm Series
031-0001-0001	031-0017-0001	031-0016-0001
031-0001-0003	031-0018-0001	031-0019-0001
031-0002-0001		031-0046-0001
031-0003-0001		
031-0024-0001		
051-0125-0001		

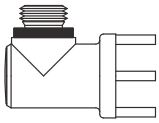

Right-Angle Printed Circuit Receptacle

S-50 Ohm Series	S-70 Ohm Series	S-93 Ohm Series
031-0061-0001	031-0072-0001	031-0073-0001
051-0459-0001		

Catalog 1308940
Revised 9-14

www.te.com

Dimensions are shown for reference purposes only. Specifications subject to change.

Dimensions are in millimeters unless otherwise specified.

USA: +1 800 522 6752
Asia Pacific: +86 0 400 820 6015
UK: +44 800 267 666

For additional support numbers please visit www.te.com

MICRODOT Standard Connectors — Screw-On Series (Continued)

Plugs

S-50, 70 & 93

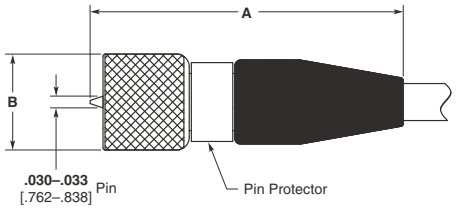

Part No.	Dim. A	Dim. B	Cable Jacket Max.	Special Features	Instruction Sheet No.	Former MICRODOT I.S. No.	Assembly Tool
S-50 Series (50 Ohm) .190 [4.83] -32 UNF-2B Thread							
032-0021-0001	.745 18.92	.230 5.84 Dia.	.087 2.21	[1]Solderless Assembly	408-8521	RF-ASMB-88	010-0003-0000
032-0023-0001	.745 18.92	.230 5.84 Dia.	.087 2.21	[1]	408-8522	RF-ASMB-89	010-0003-0000
032-0025-0001	.745 18.92	.230 5.84 Dia.	.093 2.36	[1]Solderless Assembly	408-8521	RF-ASMB-88	010-0003-0000
032-0033-0001	.745 18.92	.230 5.84 Dia.	.093 2.36	[1]	408-8522	RF-ASMB-89	010-0003-0000
032-0097-0001	.745 18.92	.250 6.35 Hex.	.087 2.21	[1]Solderless Assembly, Hex Nut	408-8521	RF-ASMB-88	010-0003-0000
032-0098-0001	.745 18.92	.250 6.35 Hex.	.087 2.21	Hex Nut	408-8522	RF-ASMB-89	010-0003-0000
032-0155-0001	.700 17.78	.250 6.35 Hex.	.088 2.24	[1, 2]Hex Nut, .187 [4.75] Hex Cable Clamp Nut	408-8522	RF-ASMB-89	010-0003-0000
032-0156-0001	.700 17.78	.250 6.35 Dia.	.088 2.24	[1, 2].187 [4.75] Hex Cable Clamp Nut	408-8522	RF-ASMB-89	010-0003-0000
052-0213-0001	.745 18.92	.250 6.35 Hex.	.087 2.21	[1]Solderless, Hex Nut w/ Safety Wire Holes, .021 [0.53] Wire Max.	408-8521	RF-ASMB-88	010-0003-0000
052-0235-0001	.745 18.92	.250 6.35 Hex.	.087 2.21	[1, 2]Hex Nut	408-8522	RF-ASMB-89	010-0003-0000
052-0235-0003	.745 18.92	.250 6.35 Hex.	.087 2.21	[1, 2]Hex Nut w/ Safety Wire Holes, .021 [0.53] Wire Max.	408-8522	RF-ASMB-89	010-0003-0000
052-0370-0001	.745 18.92	.250 6.35 Hex.	.093 2.36	[1]Hex Nut, Designed for Dual Shield Cable	408-8522	RF-ASMB-89	010-0003-0000
052-0542-0001	.745 18.92	.250 6.35 Hex.	.087 2.21	[1]Hex Nut	408-8522	RF-ASMB-89	010-0003-0000
S-70 Series (70 Ohm) .216 [5.49] -32 UNEF-2B Thread							
032-0010-0001	.760 19.30	.255 6.48 Dia.	.093 2.36	[1]Solderless Assembly	408-8521	RF-ASMB-88	010-0004-0000
032-0022-0001	.760 19.30	.255 6.48 Dia.	.093 2.36	[1]	408-8525	RF-ASMB-95	010-0004-0000
032-0067-0001	.755 19.18	.255 6.48 Dia.	.108 2.74	[1]	408-8522	RF-ASMB-89	010-0035-0000
032-0078-0001	.755 19.18	.255 6.48 Dia.	.108 2.74	[1]Solderless Assembly	408-8521	RF-ASMB-88	010-0035-0000
032-0222-0001	.760 19.30	.281 7.14 Hex.	.093 2.36	[1]Hex Nut w/ Safety Wire Holes, .014 [0.35] Wire Max.	408-8525	RF-ASMB-95	010-0004-0000
052-0092-0001	.760 19.30	.255 6.48 Dia.	.093 2.36	[2]	408-8525	RF-ASMB-95	010-0004-0000
S-93 Series (93 Ohm) .250 [6.35] -32 UNEF-2B Thread							
032-0011-0001	.760 19.30	.320 8.13 Dia.	.134 3.40	[1]Solderless Assembly	408-8521	RF-ASMB-88	010-0005-0000
032-0017-0001	.760 19.30	.320 8.13 Dia.	.134 3.40	[1]	408-8525	RF-ASMB-95	010-0005-0000
032-0066-0001	.950 24.13	.350 8.89 Dia.	.154 3.91	[1]Silicone Bend Relief Cap	408-8523	RF-ASMB-90	—
032-0071-0001	.760 19.30	.320 8.13 Dia.	.134 3.40	[1]Cable Inner Conductor, .031 [0.78] Max.	408-8525	RF-ASMB-95	010-0005-0000
032-0092-0001	.760 19.30	.320 8.13 Dia.	.155 3.94	[1]	408-8525	RF-ASMB-95	010-0044-0000
032-0099-0001	.760 19.30	.312 7.92 Hex.	.134 3.40	[1]Hex Nut	408-8525	RF-ASMB-95	010-0005-0000
052-0200-0001	.760 19.30	.312 7.92 Hex.	.134 3.40	[1]Hex Nut w/ Safety Wire Holes, .015 [0.38] Wire Max.	408-8525	RF-ASMB-95	010-0005-0000

[1]Pin protected.
[2]Hole in ferrule permits soldering to clamp ring and shield for increased cable pullout strength.

Dimensions are shown for reference purposes only. Specifications subject to change.

Dimensions are in millimeters unless otherwise specified.

USA: +1 800 522 6752
Asia Pacific: +86 0 400 820 6015
UK: +44 800 267 666

For additional support numbers please visit www.te.com

MICRODOT Standard Connectors — Screw-On Series (Continued)

Right-Angle Plugs
S-50, 70 & 93

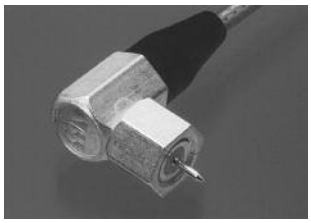

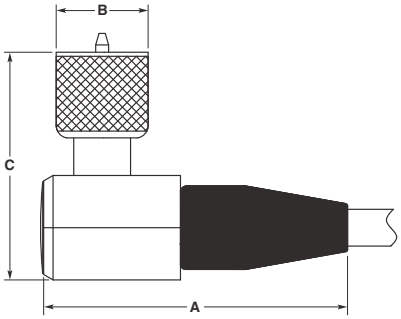

Part No.	Dim. A	Dim. B	Dim. C	Cable Jacket Max.	Special Features	Instruction Sheet No.	Former MICRODOT I.S. No.	Assembly Tool
S-50 Series (50 Ohm) .190 [4.83] -32 UNF-2B Thread								
032-0015-0001	**.735** 18.67	**.225** 5.72 Dia.	**.570** 14.48	**.092** 2.34		408-8520	RF-ASMB-87	010-0016-0000
052-0204-0001	**.735** 18.67	**.250** 6.35 Hex.	**.570** 14.48	**.092** 2.34	Hex Nut	408-8520	RF-ASMB-87	010-0016-0000
052-0215-0001	**.735** 18.67	**.250** 6.35 Hex.	**.570** 14.48	**.092** 2.34	Hex Nut w/ Safety Wire Holes, .021 [.533] Wire Max.	408-8520	RF-ASMB-87	010-0016-0000
052-0337-0001	**.745** 18.92	**.225** 5.72 Dia.	**.570** 14.48	**.111** 2.82	Dual Shield Cable	408-8520	RF-ASMB-87	010-0016-0000
S-70 Series (70 Ohm) .216 [5.49] -32 UNEF-2B Thread								
032-0013-0001	**.745** 18.92	**.255** 6.48 Dia.	**.570** 14.48	**.111** 2.82		408-8520	RF-ASMB-87	010-0016-0000
052-0299-0001	**.745** 18.92	**.281** 7.14 Hex.	**.570** 14.48	**.111** 2.82	Hex Nut w/ Safety Wire Holes, .014 [.355] Wire Max.	408-8520	RF-ASMB-87	010-0016-0000
052-0379-0001	**.745** 18.92	**.281** 7.14 Hex.	**.570** 14.48	**.111** 2.82	Hex Nut	408-8520	RF-ASMB-87	010-0016-0000
S-93 Series (93 Ohm) .250 [6.35] -32 UNEF-2B Thread								
032-0014-0001	**.745** 18.92	**.320** 8.13 Dia.	**.630** 16.00	**.134** 3.40		408-8520	RF-ASMB-87	010-0017-0000
032-0068-0001	**.745** 18.92	**.320** 8.13 Dia.	**.630** 16.00	**.155** 3.94		408-8520	RF-ASMB-87	010-0017-0000
032-0153-0001	**.745** 18.92	**.312** 7.92 Hex.	**.630** 16.00	**.155** 3.94	Hex Nut	408-8520	RF-ASMB-87	010-0017-0000
052-0207-0001	**.745** 18.92	**.312** 7.92 Hex.	**.630** 16.00	**.134** 3.40	Hex Nut	408-8520	RF-ASMB-87	010-0017-0000
052-0298-0001	**.745** 18.92	**.312** 7.92 Hex.	**.630** 16.00	**.134** 3.40	Hex Nut w/ Safety Wire Holes, .015 [.381] Wire Max.	408-8520	RF-ASMB-87	010-0017-0000
052-0304-0022	**.745** 18.92	**.312** 7.92 Hex.	**.630** 16.00	**.155** 3.94	Hex Nut w/ Safety Wire Holes, .015 [.381] Wire Max., Silicone Bend Relief Cap	408-8520	RF-ASMB-87	010-0017-0000

Dimensions are shown for reference purposes only. Specifications subject to change.

Dimensions are in millimeters unless otherwise specified.

USA: +1 800 522 6752
Asia Pacific: +86 0 400 820 6015
UK: +44 800 267 666

For additional support numbers please visit www.te.com

MICRODOT Standard Connectors — Screw-On Series (Continued)

Jacks

S-50, 70 & 93

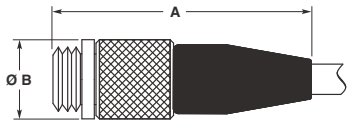

Fig. 1

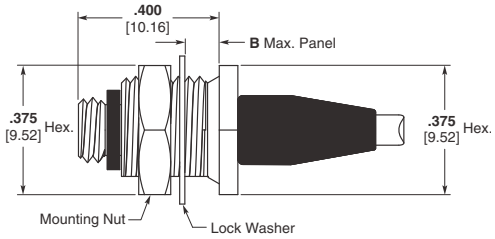

Fig. 2

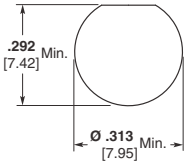

Mounting Hole

Part No.	Fig.	Dim. A	Dim. B	Cable Jacket Max.	Special Features	Instruction Sheet No.	Former MICRODOT I.S. No.	Assembly Tool
S-50 Series (50 Ohm) .190 [4.83] -32 UNF-2A Thread								
031-0033-0001	2	**.870** 22.10	**.140** 3.56	**.088** 2.24		408-8522	RF-ASMB-89	010-0003-0000
031-0034-0001	1	**.750** 19.05	**.235** 5.97	**.087** 2.21		408-8522	RF-ASMB-89	010-0003-0000
051-0467-0001	1	**.720** 18.30	**.235** 5.97	**.079** 2.01	Hex Collet Cable Clamp	408-8522	RF-ASMB-89	010-0003-0000
S-70 Series (70 Ohm) .216 [5.49] -32 UNEF-2A Thread								
031-0036-0001	1	**.760** 19.30	**.255** 6.48	**.093** 2.36		408-8522	RF-ASMB-89	010-0004-0000
031-0048-0001	2	**.880** 22.35	**.140** 3.56	**.093** 2.36		408-8525	RF-ASMB-95	010-0004-0000
031-0090-0001	1	**.760** 19.30	**.255** 6.48	**.109** 2.77		408-8522	RF-ASMB-89	010-0035-0000
S-93 Series (93 Ohm) .250 [6.35] -32 UNEF-2A Thread								
031-0032-0001	2	**.880** 22.35	**.155** 3.94	**.134** 3.40		408-8525	RF-ASMB-95	010-0005-0000
031-0037-0001	1	**.760** 19.30	**.320** 8.13	**.134** 3.40		408-8525	RF-ASMB-95	010-0005-0000
031-0088-0001	1	**1.000** 25.40	**.320** 8.13	**.154** 3.91		408-8533	RF-ASMB-106	—
031-0089-0001	2	**.750** 19.05	**.140** 3.56	**.154** 3.91	No Mounting Flat, Hex Nut Cable Clamp	408-8524	RF-ASMB-92	—

Catalog 1308940
Revised 9-14

www.te.com

Dimensions are shown for reference purposes only. Specifications subject to change.

Dimensions are in millimeters unless otherwise specified.

USA: +1 800 522 6752
Asia Pacific: +86 0 400 820 6015
UK: +44 800 267 666

For additional support numbers please visit www.te.com

MICRODOT Standard Connectors — Screw-On Series (Continued)

Receptacles

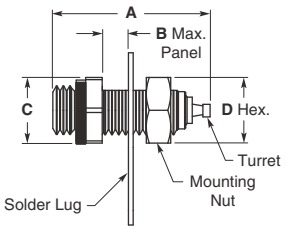

Fig. 1

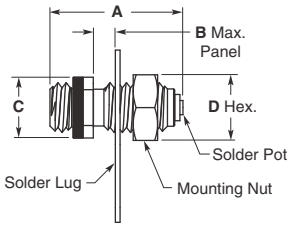

Fig. 2

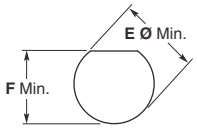

Mounting Hole
for Fig. 1 & 2

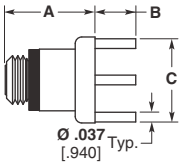

Fig. 3

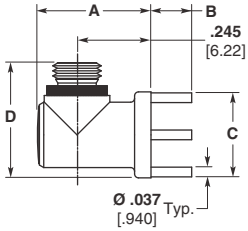

Fig. 4

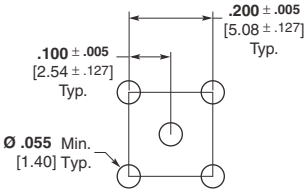

Mounting Pattern
for Fig. 3 & 4

Part No.	Fig.	Dim. A	Dim. B	Dim. C	Dim. D	Dim. E	Dim. F	Special Features
S-50 Series (50 Ohm) .190 [4.83] -32 UNF-2A Thread								
031-0001-0001	2	**.515** 13.08	**.080** 2.03	**.187** 4.75 Wrench Flats	**.250** 6.35	**.191** 4.85	—	No Mounting Flat
031-0001-0003	2	**.510** 12.95	**.110** 2.80	**.187** 4.75 Wrench Flats	**.250** 6.35	**.191** 4.85	—	No Mounting Flat
031-0002-0001	2	**.515** 13.08	**.150** 3.81	**.187** 4.75 Wrench Flats	**.250** 6.35	**.191** 4.85	—	No Mounting Flat
031-0003-0001	2	**.255** 6.48	—	**.187** 4.75 Wrench Flats	—	**.190** 4.83 -32	—	No Nut or Solder Lug, Threads into Panel
031-0024-0001	2	**.555** 14.10	**.120** 3.05	**.344** 8.74 Wrench Flats	**.438** 11.13	**.345** 8.76	—	Housing Isolated by Nylon Insulator
031-0050-0001	1	**.605** 15.37	**.160** 4.06	**.250** 6.35 Hex.	**.250** 4.75	**.191** 4.85	**.173** 4.39	
031-0059-0001	3	**.340** 8.64	**.155** 3.93	**.330** 8.38 Dia.	—	—	—	
031-0061-0001	4	**.425** 10.80	**.155** 3.93	**.330** 8.38 Dia.	**.480** 12.20	—	—	
031-0062-0001	3	**.345** 8.76	**.250** 6.35	**.330** 8.38 Dia.	—	—	—	
051-0125-0001	2	**.315** 8.00	**.125** 3.18	**.187** 4.75 Wrench Flats	—	**.138** 3.50	—	No Mounting Thread, Solder or Press into Panel
051-0318-0001	1	**.605** 15.37	**.160** 4.06	**.250** 6.35 Hex.	**.250** 4.75	**.191** 4.85	**.173** 4.39	w/ Safety Wire Holes, .014 [.355] Wire Max.
051-0450-0001	3	**.340** 8.64	**.050** 1.27	**.330** 8.38 Dia.	—	—	—	
051-0459-0001	4	**.425** 10.80	**.155** 3.93	**.330** 8.38 Dia.	**.480** 12.20	—	—	3 Outer Legs
S-70 Series (70 Ohm) .216 [5.49] -32 UNEF-2A Thread								
031-0017-0001	2	**.555** 14.10	**.100** 2.54	**.250** 6.35 Hex.	**.281** 7.14	**.217** 5.51	—	No Mounting Flat
031-0018-0001	2	**.555** 14.10	**.160** 4.06	**.250** 6.35 Hex.	**.281** 7.14	**.217** 5.51	—	No Mounting Flat
031-0051-0001	1	**.605** 15.37	**.160** 4.06	**.250** 6.35 Hex.	**.281** 7.14	**.217** 5.51	**.197** 5.00	
031-0069-0001	3	**.340** 8.64	**.155** 3.94	**.330** 8.38 Dia.	—	—	—	
031-0072-0001	4	**.425** 10.80	**.155** 3.94	**.330** 8.38 Dia.	**.480** 12.20	—	—	

Catalog 1308940
Revised 9-14

www.te.com

Dimensions are shown for reference purposes only. Specifications subject to change.

Dimensions are in millimeters unless otherwise specified.

USA: +1 800 522 6752
Asia Pacific: +86 0 400 820 6015
UK: +44 800 267 666

For additional support numbers please visit www.te.com

MICRODOT Standard Connectors — Screw-On Series (Continued)

Receptacles (Continued)

Part No.	Fig.	Dim. A	Dim. B	Dim. C	Dim. D	Dim. E	Dim. F	Special Features
S-93 Series (93 Ohm) .250 [6.35] -32 UNEF-2A Thread								
031-0016-0001	2	**.555** 14.10	**.100** 2.54	**.312** 7.92 Hex.	**.312** 7.92	**.251** 6.38	—	No Mounting Flat
031-0019-0001	2	**.555** 14.10	**.160** 2.54	**.312** 7.92 Hex.	**.312** 7.92	**.251** 6.38	—	No Mounting Flat
031-0046-0001	2	**.555** 3.05	**.120** 3.05	**.345** 8.76 Wrench Flats	**.438** 11.13	**.345** 8.76	—	Housing Isolated by Nylon Insulator
031-0052-0001	1	**.605** 15.37	**.160** 2.54	**.312** 7.92 Hex.	**.312** 7.92	**.251** 6.38	**.232** 5.89	
031-0067-0001	3	**.340** 8.64	**.155** 3.94	**.330** 8.38 Dia.	—	—	—	
031-0073-0001	4	**.425** 10.80	**.155** 3.94	**.330** 8.38 Dia.	**.480** 12.20	—	—	
031-0080-0001	3	**.345** 8.76	**.250** 6.35	**.330** 8.38 Dia.	—	—	—	

MICRODOT Standard Connectors — Slide-On Series

All plugs shown below mate with all jacks/receptacles shown below.

Plug

SOS-50 Ohm Series	SOS-70 Ohm Series	SOS-93 Ohm Series
032-0055-0001	032-0060-0001	032-0077-0001
	032-0087-0001	032-0084-0001

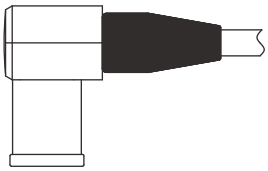

Right-Angle Plug

SOS-50 Ohm Series	SOS-70 Ohm Series	SOS-93 Ohm Series
032-0063-0001	032-0062-0001	032-0059-0001
		032-0083-0001

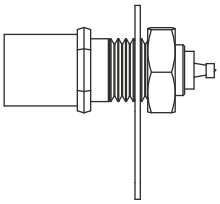

Plug Receptacle

SOS-50 Ohm Series	SOS-70 Ohm Series	SOS-93 Ohm Series
032-0042-0001	032-0042-0001	032-0042-0001
052-0061-0001	052-0061-0001	052-0061-0001
052-0471-0001	052-0471-0001	052-0471-0001

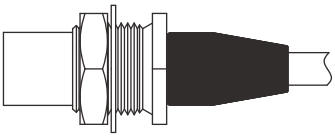

Bulkhead Plug

SOS-50 Ohm Series	SOS-70 Ohm Series	SOS-93 Ohm Series
032-0056-0001	032-0061-0001	032-0058-0001

Jack

SOS-50 Ohm Series	SOS-70 Ohm Series	SOS-93 Ohm Series
031-0053-0001	031-0095-0001	031-0063-0001
		031-0093-0001

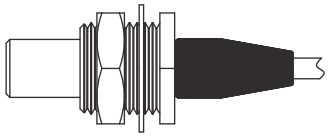

Bulkhead Jack

SOS-50 Ohm Series	SOS-70 Ohm Series	SOS-93 Ohm Series
031-0054-0001		031-0064-0001
		031-0094-0001

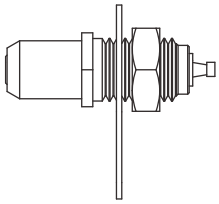

Receptacle

SOS-50 Ohm Series	SOS-70 Ohm Series	SOS-93 Ohm Series
031-0049-0001	031-0049-0001	031-0049-0001
051-0258-0001	051-0258-0001	051-0258-0001
051-0325-0001	051-0325-0001	051-0325-0001

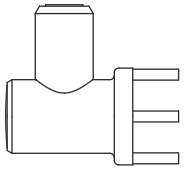

Right-Angle Printed Circuit Receptacle

SOS-50 Ohm Series	SOS-70 Ohm Series	SOS-93 Ohm Series
031-0070-0001	031-0070-0001	031-0070-0001

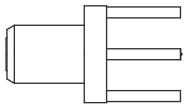

Printed Circuit Receptacle

SOS-50 Ohm Series	SOS-70 Ohm Series	SOS-93 Ohm Series
031-0060-0001	031-0060-0001	031-0060-0001
031-0065-0001	031-0065-0001	031-0065-0001

Catalog 1308940
Revised 9-14

www.te.com

Dimensions are shown for reference purposes only. Specifications subject to change.

Dimensions are in millimeters unless otherwise specified.

USA: +1 800 522 6752
Asia Pacific: +86 0 400 820 6015
UK: +44 800 267 666

For additional support numbers please visit www.te.com

MICRODOT Standard Connectors — Slide-On Series (Continued)

Straight Plugs

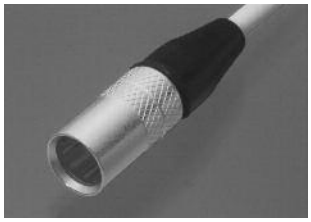

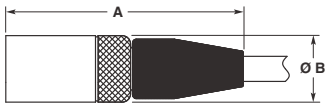

Fig. 1

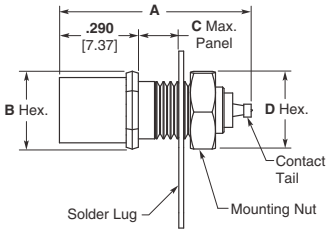

Fig. 2
Plug Receptacle

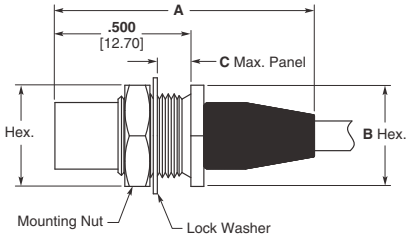

Fig. 3
Bulkhead Plug

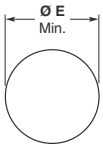

Mounting Hole
for Fig. 2 & 3

Part No.	Fig.	Dim. A	Dim. B	Dim. C	Dim. D	Dim. E	Cable Max. Jacket	Special Features	Instruction Sheet No.	Former MICRODOT I.S. No.	Assembly Tool
SOS-50 Series (50 Ohm)											
032-0042-0001	2	**.705** 17.91	**.250** 6.35	**.160** 4.06	**.281** 7.14	**.217** 5.51	—	Turret Pin Contact Tail	—	—	—
032-0055-0001	1	**.870** 22.10	**.250** 6.35	—	—	—	**.088** 2.24		408-8526	RF-ASMB-97	010-0007-0000
032-0056-0001	3	**.950** 24.13	**.375** 9.53	**.145** 3.68	**.375** 9.53	**.313** 7.95	**.088** 2.24		408-8526	RF-ASMB-97	010-0007-0000
052-0061-0001	2	**.750** 19.05	**.250** 6.35	**.160** 4.06	**.281** 7.14	**.217** 5.51	—	Solder Pot Contact Tail	—	—	—
052-0471-0001	2	**.590** 14.99	**.250** 6.35	**.095** 2.41	**.281** 7.14	**.217** 5.51	—	Straight Pin Contact Tail[1]	—	—	—
SOS-70 Series (70 Ohm)											
032-0042-0001	2	**.705** 17.91	**.250** 6.35	**.160** 4.06	**.281** 7.14	**.217** 5.51	—	Turret Pin Contact Tail	—	—	—
032-0060-0001	1	**.880** 22.35	**.250** 6.35	—	—	—	**.093** 2.36		408-8529	RF-ASMB-102	010-0007-0000
032-0061-0001	3	**.960** 24.38	**.375** 9.53	**.145** 3.68	**.375** 9.53	**.313** 7.95	**.093** 2.36		408-8526	RF-ASMB-97	010-0007-0000
032-0087-0001	1	**.880** 22.35	**.250** 6.35	—	—	—	**.108** 2.24		408-8526	RF-ASMB-97	010-0036-0000
052-0061-0001	2	**.750** 19.05	**.250** 6.35	**.160** 4.06	**.281** 7.14	**.217** 5.51	—	Solder Pot Contact Tail	—	—	—
052-0471-0001	2	**.590** 14.99	**.250** 6.35	**.095** 2.41	**.281** 7.14	**.217** 5.51	—	Straight Pin Contact Tail[1]	—	—	—
SOS-93 Series (93 Ohm)											
032-0042-0001	2	**.705** 17.91	**.250** 6.35	**.160** 4.06	**.281** 7.14	**.217** 5.51	—	Turret Pin Contact Tail	—	—	—
032-0058-0001	3	**.960** 24.38	**.375** 9.53	**.145** 3.68	**.375** 9.53	**.313** 7.95	**.134** 3.40		408-8529	RF-ASMB-102	010-1008-0000
032-0077-0001	1	**.880** 22.35	**.250** 6.35	—	—	—	**.134** 3.40		408-8529	RF-ASMB-102	010-1008-0000
032-0084-0001	1	**1.06** 26.92	**.250** 6.35	—	—	—	**.154** 3.91		408-8523	RF-ASMB-90	—
052-0061-0001	2	**.750** 19.05	**.250** 6.35	**.160** 4.06	**.281** 7.14	**.217** 5.51	—	Solder Pot Contact Tail	—	—	—
052-0471-0001	2	**.590** 14.99	**.250** 6.35	**.095** 2.41	**.281** 7.14	**.217** 5.51	—	Straight Pin Contact Tail[1]	—	—	—

[1]Lockwasher supplied in place of solder lug.

Catalog 1308940
Revised 9-14

www.te.com

Dimensions are shown for reference purposes only. Specifications subject to change.

Dimensions are in millimeters unless otherwise specified.

USA: +1 800 522 6752
Asia Pacific: +86 0 400 820 6015
UK: +44 800 267 666

For additional support numbers please visit www.te.com

MICRODOT Standard Connectors — Slide-On Series (Continued)

Jacks

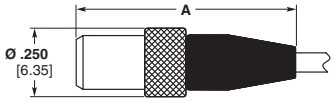

Fig. 1

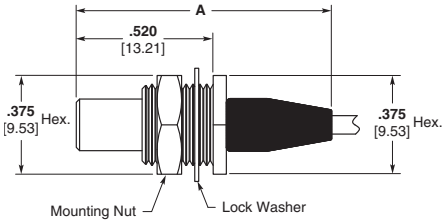

Fig. 2

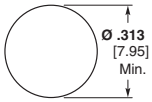

Mounting Hole

Part No.	Fig.	Dim. A	Cable Jacket Max.	Special Features	Instruction Sheet No.	Former MICRODOT I.S. No.	Assembly Tool
SOS-50 Series (50 Ohm)							
031-0053-0001	1	**.800** 20.32	**.088** 2.24		408-8531	RF-ASMB-104	010-0007-0000
031-0054-0001	2	**.970** 24.64	**.088** 2.24		408-8531	RF-ASMB-104	010-0007-0000
SOS-70 Series (70 Ohm)							
031-0095-0001	1	**.810** 20.57	**.108** 2.74		408-8531	RF-ASMB-104	010-0036-0000
SOS-93 Series (93 Ohm)							
031-0063-0001	1	**.810** 20.57	**.134** 3.40		408-8530	RF-ASMB-103	010-1008-0000
031-0064-0001	2	**.980** 24.89	**.134** 3.40		408-8530	RF-ASMB-103	010-1008-0000
031-0093-0001	1	**1.100** 27.94	**.154** 3.91	.305 [7.75] Dia. Over B.R. Cap	408-8532	RF-ASMB-105	—
031-0094-0001	2	**.750** 19.05	**.154** 3.91	Hex Nut Cable Clamp	408-8524	RF-ASMB-92	—

Right-Angle Plugs

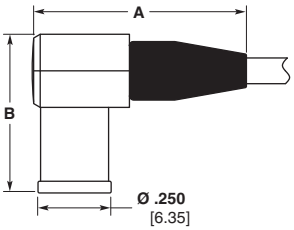

Part No.	Dim. A	Dim. B	Cable Max. O.D.	Special Features	Instruction Sheet No.	Former MICRODOT I.S. No.	Assembly Tool
SOS-50 Series (50 Ohm)							
032-0063-0001	**.735** 18.67	**.545** 13.84	**.092** 2.34		408-8520	RF-ASMB-87	010-0016-0000
SOS-70 Series (70 Ohm)							
032-0062-0001	**.745** 18.92	**.545** 13.84	**.111** 2.82		408-8520	RF-ASMB-87	010-0016-0000
SOS-93 Series (93 Ohm)							
032-0059-0001	**.745** 18.92	**.605** 15.37	**.134** 3.40		408-8520	RF-ASMB-87	010-0017-0000
032-0083-0001	**.745** 18.92	**.605** 15.37	**.155** 3.94		408-8520	RF-ASMB-87	010-0017-0000

Dimensions are shown for reference purposes only. Specifications subject to change.

Dimensions are in millimeters unless otherwise specified.

USA: +1 800 522 6752
Asia Pacific: +86 0 400 820 6015
UK: +44 800 267 666

For additional support numbers please visit www.te.com

MICRODOT Standard Connectors — Slide-On Series (Continued)

Receptacles

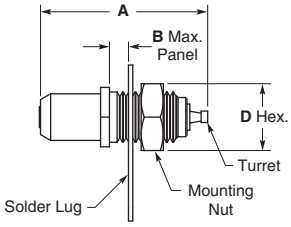

Fig. 1

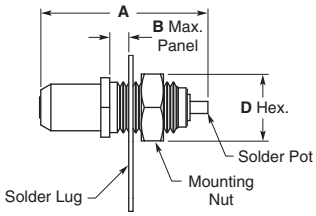

Fig. 2

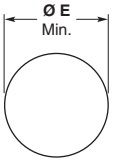

Mounting Hole
for Fig. 1 & 2

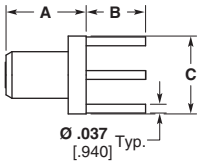

Fig. 3

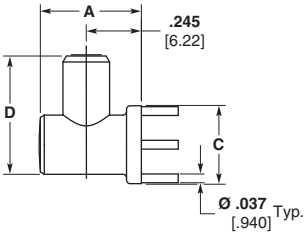

Fig. 4

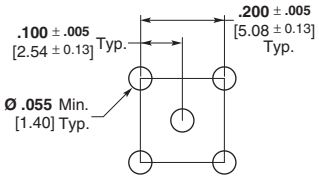

Mounting Pattern
for Fig. 3 & 4

Part No.	Fig.	Dim. A	Dim. B	Dim. C	Dim. D	Dim. E	Special Features
SOS-50 (50 Ohm), SOS-70 (70 Ohm), & SOS-93 (93 Ohm) Series							
031-0049-0001	1	**.715** 18.16	**.160** 4.06	**.250** 6.35 Hex.	**.281** 7.14	**.217** 5.51	
031-0060-0001	3	**.340** 8.64	**.155** 3.94	**.330** 8.38 Dia.	—	—	
031-0065-0001	3	**.340** 8.64	**.250** 6.35	**.330** 8.38 Dia.	—	—	
031-0070-0001	4	**.425** 10.79	**.155** 3.94	**.330** 8.38 Dia.	**.540** 13.72	—	
051-0258-0001	2	**.715** 18.16	**.160** 4.06	**.250** 6.35 Hex.	**.281** 7.14	**.217** 5.51	
051-0325-0001	1	**.570** 14.48	**.140** 3.56	**.250** 6.35 Hex.	—	**.216-32** 5.49 Thd.	No Nut or Lockwasher, Threads into Panel

Dimensions are shown for reference purposes only. Specifications subject to change.

Dimensions are in millimeters unless otherwise specified.

USA: +1 800 522 6752
Asia Pacific: +86 0 400 820 6015
UK: +44 800 267 666

For additional support numbers please visit www.te.com

MICRODOT Standard Connectors — Quick-Connect Series

Plug

QC-50 Ohm Series	QC-70 Ohm Series	QC-93 Ohm Series
032-0002-0001	032-0016-0001	032-0012-0001
032-0030-0001	032-0031-0001	032-0032-0001
	032-0079-0001	032-0072-0001

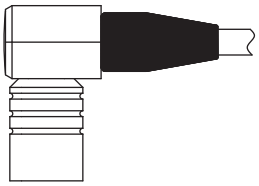

Right-Angle Plug

QC-50 Ohm Series	QC-70 Ohm Series	QC-93 Ohm Series
032-0026-0001	032-0027-0001	032-0020-0001
		052-0228-0001

Jack

QC-50 Ohm Series	QC-70 Ohm Series	QC-93 Ohm Series
031-0038-0001		031-0040-0001

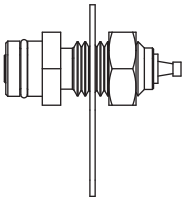

Receptacle

QC-50 Ohm Series	QC-70 Ohm Series	QC-93 Ohm Series
031-0057-0001	031-0057-0001	031-0058-0001
		031-0085-0001

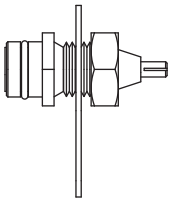

Receptacle

QC-50 Ohm Series	QC-70 Ohm Series	QC-93 Ohm Series
031-0004-0001	031-0004-0001	031-0020-0001
031-0005-0001	031-0005-0001	031-0021-0001
031-0006-0001	031-0006-0001	
051-0586-0001	051-0586-0001	

Dimensions are shown for reference purposes only. Specifications subject to change.

Dimensions are in millimeters unless otherwise specified.

USA: +1 800 522 6752
Asia Pacific: +86 0 400 820 6015
UK: +44 800 267 666

For additional support numbers please visit www.te.com

MICRODOT Standard Connectors — Quick-Connect Series (Continued)

Straight Plugs

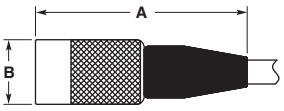

Part No.	Dim. A	Dim. B	Cable Jacket Max.	Special Features	Instruction Sheet No.	Former MICRODOT I.S. No.	Assembly Tool
QC-50 Series (50 Ohm)							
032-0002-0001	**.820** 20.83	**.250** 6.35	**.093** 2.36	Solderless Assembly	408-8527	RF-ASMB-100	010-0007-0000
032-0030-0001	**.820** 20.83	**.250** 6.35	**.093** 2.36		408-8526	RF-ASMB-97	010-0007-0000
QC-70 Series (70 Ohm)							
032-0016-0001	**.830** 21.08	**.250** 6.35	**.093** 2.36	Solderless Assembly	408-8527	RF-ASMB-100	010-0007-0000
032-0031-0001	**.830** 21.08	**.250** 6.35	**.093** 2.36		408-8529	RF-ASMB-102	010-0007-0000
032-0079-0001	**.840** 21.34	**.250** 6.35	**.108** 2.74		408-8526	RF-ASMB-97	010-0036-0000
QC-93 Series (93 Ohm)							
032-0012-0001	**.845** 21.46	**.312** 7.92	**.134** 3.40	Solderless Assembly	408-8527	RF-ASMB-100	010-0008-0000
032-0032-0001	**.845** 21.46	**.312** 7.92	**.134** 3.40		408-8529	RF-ASMB-102	010-0008-0000
032-0072-0001	**1.050** 26.67	**.312** 7.92	**.154** 3.91	Mates with 031-0085-0001 Only	408-8523	RF-ASMB-90	—

Right-Angle Plugs

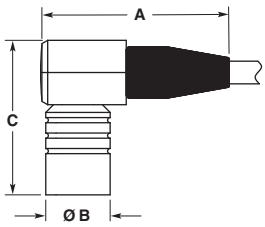

Part No.	Dim. A	Dim. B	Dim. C	Cable Jacket Max.	Special Features	Instruction Sheet No.	Former MICRODOT I.S. No.	Assembly Tool
QC-50 Series (50 Ohm)								
032-0026-0001	**.735** 18.67	**.250** 6.35	**.605** 15.37	**.092** 2.34		408-8520	RF-ASMB-87	010-0016-0000
QC-70 Series (70 Ohm)								
032-0027-0001	**.745** 18.92	**.250** 6.35	**.605** 15.37	**.111** 2.82		408-8520	RF-ASMB-87	010-0016-0000
QC-93 Series (93 Ohm)								
032-0020-0001	**.745** 18.92	**.312** 7.92	**.635** 16.13	**.134** 3.40		408-8520	RF-ASMB-87	010-0017-0000
052-0228-0001	**.745** 18.92	**.312** 7.92	**.720** 18.29	**.155** 3.94	Mates with 031-0085-0001 Only	408-8520	RF-ASMB-87	010-0017-0000

Dimensions are shown for reference purposes only. Specifications subject to change.

Dimensions are in millimeters unless otherwise specified.

USA: +1 800 522 6752
Asia Pacific: +86 0 400 820 6015
UK: +44 800 267 666

For additional support numbers please visit www.te.com

MICRODOT Standard Connectors — Quick-Connect Series (Continued)

Jacks

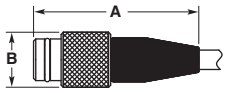

Part No.	Dim. A	Dim. B	Cable Jacket Max.	Special Features	Instruction Sheet No.	Former MICRODOT I.S. No.	Assembly Tool
QC-50 Series (50 Ohm)							
031-0038-0001	**.750** 19.05	**.250** 6.35	**.093** 2.36		408-8531	RF-ASMB-104	010-0007-0000
QC-93 Series (93 Ohm)							
031-0040-0001	**.760** 19.30	**.320** 8.13	**.134** 3.40		408-8530	RF-ASMB-103	010-1009-0000

Receptacles

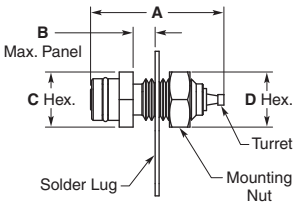

Fig. 1

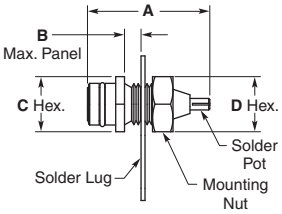

Fig. 2

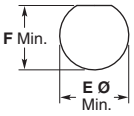

Mounting Hole

Part No.	Fig.	Dim. A	Dim. B	Dim. C	Dim. D	Dim. E	Dim. F	Special Features
QC-50 Series (50 Ohm) & QC-70 Series (70 Ohm)								
031-0004-0001	2	**.555** 14.10	**.095** 2.41	**.250** 6.35	**.250** 6.35	**.191** 4.85	—	No Mounting Flat
031-0005-0001	2	**.555** 14.10	**.165** 4.19	**.250** 6.35	**.250** 6.35	**.191** 4.85	—	No Mounting Flat
031-0006-0001	2	**.250** 6.35	—	**.250** 6.35	—	**.190-32** Thd 4.83	—	No Nut or Solder Lug, Threads into Panel
031-0057-0001	1	**.605** 15.37	**.165** 4.19	**.250** 6.35	**.250** 6.35	**.191** 4.85	**.173** 4.39	
051-0586-0001	2	**.555** 14.10	**.165** 4.19	**.250** 6.35	**.250** 6.35	**.191** 4.85	—	No Mounting Flat, Split Solder Lug
QC-93 Series (93 Ohm)								
031-0020-0001	2	**.555** 14.10	**.095** 2.41	**.312** 7.92	**.312** 7.92	**.251** 6.38	—	No Mounting Flat
031-0021-0001	2	**.555** 14.10	**.165** 4.19	**.312** 7.92	**.312** 7.92	**.251** 6.38	—	No Mounting Flat
031-0058-0001	1	**.605** 15.37	**.160** 4.06	**.312** 7.92	**.312** 7.92	**.251** 6.38	**.232** 5.89	
031-0085-0001	1	**.715** 18.16	**.165** 4.19	**.312** 7.92	**.312** 7.92	**.251** 6.38	—	No Mounting Flat, Mates with 032-0072-0001 & 052-0228-0001 Only

Dimensions are shown for reference purposes only. Specifications subject to change.

Dimensions are in millimeters unless otherwise specified.

USA: +1 800 522 6752
Asia Pacific: +86 0 400 820 6015
UK: +44 800 267 666

For additional support numbers please visit www.te.com

MICRODOT Standard Connectors — Twinax Series

Twinax Plugs:

For cables with two inner conductors and one shield

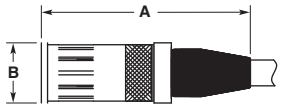

Fig. 1
Slide-On Series

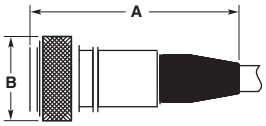

Fig. 2
Screw-On Series

Part No.	Fig.	Dim. A	Dim. B	Cable Jacket Max.	Special Features	Instruction Sheet No.	Former MICRODOT I.S. No.	Assembly Tool
032-0088-0001	1	**1.085** 27.56	**.312** 7.92	**.167** 4.24		408-8528	RF-ASMB-101	010-0031-0000
032-0093-0001	1	**1.085** 27.56	**.312** 7.92	**.123** 3.12		408-8528	RF-ASMB-101	010-0031-0000
052-0229-0001	2	**1.085** 27.56	**.440** 11.18	**.123** 3.12		408-8517	RF-ASMB-61	010-0172-0000
052-0324-0001	2	**1.095** 27.81	**.440** 11.18	**.167** 4.24		408-8517	RF-ASMB-61	010-0172-0000

Twinax Receptacles and Jacks:

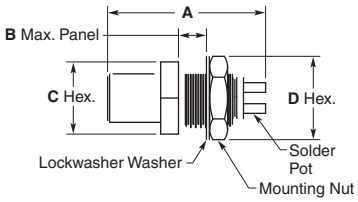

Fig. 1
Slide-On Series

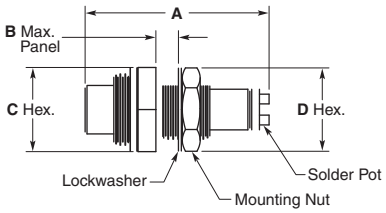

Fig. 2
Slide-On Series or Screw-On Series

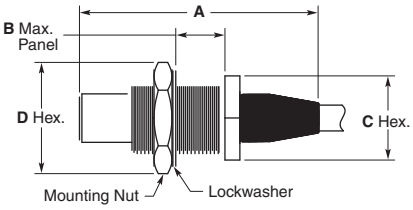

Fig. 3
Slide-On Series or Screw-On Series

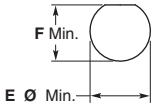

Mounting Hole

Part No.	Fig.	Dim. A	Dim. B	Dim. C	Dim. D	Dim. E	Dim. F	Cable Max. Jacket	Special Features	Instruction Sheet No.	Former MICRODOT I.S. No.	Assembly Tool
031-0098-0001	1	**.812** 20.62	**.155** 3.94	**.375** 9.53	**.375** 9.53	**.313** 7.95	**.292** 7.42	—		—	—	—
051-0248-0001	2	**.960** 24.38	**.155** 3.94	**.437** 11.10	**.375** 9.53	**.313** 7.95	**.292** 7.42	—		—	—	—
051-0358-0001	3	**1.060** 26.92	**.075**[1] 1.91	**.437** 11.10	**.500** 12.7	**.376** 9.55	**.351** 8.92	**.167** 4.24	Lockwasher not included	408-8516	RF-ASMB-44	010-0186-0000
051-0389-0001	3	**1.255** 31.88	**.255**[2] 6.48	**.437** 11.10	**.500** 12.7	**.376** 9.55	**.351** 8.92	**.167** 4.24		408-8516	RF-ASMB-44	010-0186-0000

[1].075 [1.91] Max. Panel when mated with a Screw-On plug, .180 [4.57] Max. Panel when mated with a Slide-On plug.
[2].255 [6.48] Max. Panel when mated with a Screw-On plug, .360 [9.14] Max. Panel when mated with a Slide-On plug.

Catalog 1308940
Revised 9-14

www.te.com

Dimensions are shown for reference purposes only. Specifications subject to change.

Dimensions are in millimeters unless otherwise specified.

USA: +1 800 522 6752
Asia Pacific: +86 0 400 820 6015
UK: +44 800 267 666

For additional support numbers please visit www.te.com

MICRODOT Standard Connectors — Triax Series and Terminals

Triax Plugs:

For cables with one inner conductor and two isolated shields

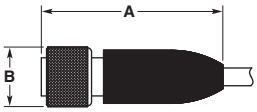

Part No.	Dim. A	Dim. B	Cable Jacket Max.	Special Features	Instruction Sheet No.	Former MICRODOT I.S. No.	Assembly Tool
052-0130-0001	**1.37** 34.80	**.440** 11.18 Dia.	**.124** 3.15		408-8514	RF-ASMB-20	—
052-0138-0001	**1.37** 34.80	**.440** 11.18 Dia.	**.183** 4.65		408-8515	RF-ASMB-21	—
052-0593-0001	**1.37** 34.80	**.438** 11.13 Hex.	**.214** 5.44	Hex Nut w/ Safety Wire Holes, .027 [.686] Wire Max.	408-8518	RF-ASMB-73	—

Triax Receptacle:

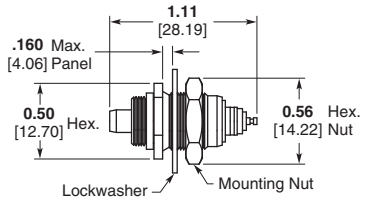

Part Number 051-0618-0001

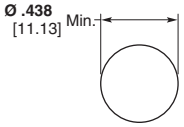

Mounting Hole

Triax Adapter:

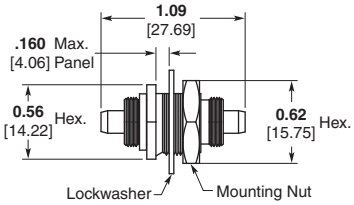

Part Number 053-0161-0001
Mates with Triax Plug, Both Ends

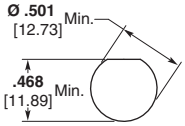

Mounting Hole

Terminals

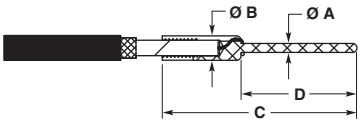

Fig. 1

Fig. 2

Part No.	Fig.	Dim. A	Dim. B	Dim. C	Dim. D	Cable Max. Dielectric	Cable Max. Inner Conductor
053-0354-0003	1	**.030** .762	**.080** 2.03	**.630** 16.00	**.375** 9.53	**.050** 1.27	**.015** .381
053-0249-0001	1	**.030** .762	**.105** 2.67	**.630** 16.00	**.375** 9.53	**.071** 1.80	**.021** .533
053-0495-0001	1	**.030** .762	**.125** 3.18	**.880** 22.35	**.610** 15.49	**.083** 2.11	**.022** .559
053-0656-0001	1	**.030** .762	**.145** 3.68	**.880** 22.35	**.375** 9.53	**.108** 2.74	**.023** .584
053-0294-0002	1	**.030** .762	**.145** 3.68	**.880** 22.35	**.625** 15.88	**.108** 2.74	**.023** .584
033-0115-0002	2	**.040** 1.02	**.063** 1.60	**.255** 6.48	**.100** 2.54	**.042** 1.07	**.023** .584
033-0116-0001	2	**.040** 1.02	**.094** 2.39	**.300** 7.62	**.100** 2.54	**.068** 1.73	**.023** .584
033-0117-0001	2	**.040** 1.02	**.140** 3.56	**.350** 8.89	**.200** 5.08	**.108** 2.74	**.023** .584
053-0154-0001	1	**.041** 1.04	**.080** 2.03	**.430** 10.92	**.175** 4.45	**.050** 1.27	**.019** .483
053-0250-0001	1	**.041** 1.04	**.080** 2.03	**.505** 12.83	**.250** 6.35	**.050** 1.27	**.019** .483
053-0020-0003	1	**.041** 1.04	**.080** 2.03	**.630** 16.00	**.375** 9.53	**.050** 1.27	**.015** .381
053-0021-0003	1	**.041** 1.04	**.105** 2.67	**.630** 16.00	**.375** 9.53	**.071** 1.80	**.023** .584
053-0267-0003	1	**.041** 1.04	**.105** 2.67	**.875** 22.23	**.625** 15.88	**.071** 1.80	**.023** .584
053-0265-0001	2	**.041** 1.04	**.128** 3.25	**.505** 12.83	**.250** 6.35	**.102** 2.59	**.021** .533
053-0230-0001	2	**.041** 1.04	**.128** 3.25	**.630** 16.00	**.375** 9.53	**.102** 2.59	**.018** .457
053-0155-0001	1	**.041** 1.04	**.145** 3.68	**.430** 10.82	**.175** 4.45	**.108** 2.74	**.023** .584
053-0022-0003	1	**.041** 1.04	**.145** 3.68	**.630** 16.00	**.375** 9.53	**.108** 2.74	**.023** .584
053-0388-0001	2	**.042** 1.07	**.098** 2.49	**.500** 12.70	**.250** 6.35	**.065** 1.65	**.021** .533
053-0251-0001	2	**.042** 1.07	**.098** 2.49	**.630** 16.00	**.375** 9.53	**.065** 1.65	**.021** .533

Terminals are gold plated. See applicable MICRODOT drawing for solder and crimp instructions.

Catalog 1308940
Revised 9-14

www.te.com

Dimensions are shown for reference purposes only. Specifications subject to change.

Dimensions are in millimeters unless otherwise specified.

USA: +1 800 522 6752
Asia Pacific: +86 0 400 820 6015
UK: +44 800 267 666

For additional support numbers please visit www.te.com

MICRODOT Standard Connectors — Module Blocks

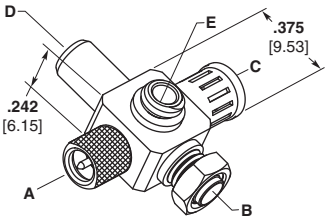

The five faces of basic block can be used to mount any one of 10 different terminations. The 5 faces are coded with letters as shown above. The 10 terminations are coded with Nos. 1–10. Part number, to be complete, must show face location and termination Nos. desired. (Ex: illustration shows 033-0042—A2—B7—C6—D5—E1) Ordering part number will be converted to a MICRODOT assigned number at time of ordering.

We do not stock complete assemblies.

Size	Part No.	Dim. H
50 Ohm	033-0042*	**.250** 6.35
70 Ohm	033-0043*	**.250** 6.35
93 Ohm	033-0044*	**.300** 7.62

*Part number to be completed by customer. A Computer Part Number will be assigned by TE Connectivity.

Interfaces/Terminations

Termination Number	1	2	3	4	5	6
Mating Type	S	S	QC	QC	SOS	SOS
Description	Receptacle	Plug with Knurl Nut	Receptacle	Plug	Receptacle	Plug
	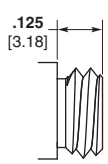	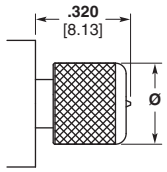	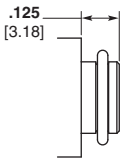	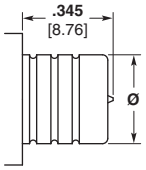	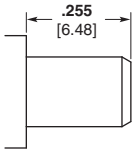	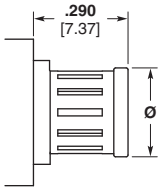
	Thread	Thread / Dia.		Dia.		Dia.
50 Series	**.190**-32 UNF 4.83	**.190**-32 UNF 4.83 / **.230** 5.84		**.250** 6.35		**.250** 6.35
70 Series	**.216**-32 UNEF 5.49	**.216**-32 UNEF 5.49 / **.255** 6.48		**.250** 6.35		**.250** 6.35
93 Series	**.250**-32 UNEF 6.35	**.250**-32 UNEF 6.35 / **.320** 8.13		**.312** 7.92		**.250** 6.35

Interfaces/Terminations (Continued)

Termination Number	7	8	9	10
Mating Type	—	—	S	S
Description	Bulkhead Stud	Bulkhead Receptacle	Plug with Hex. Nut	Plug, Hex. Nut With Wire Holes
	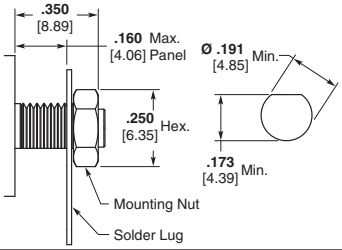	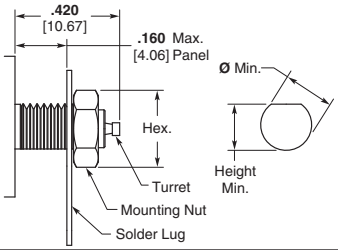	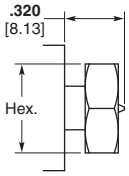	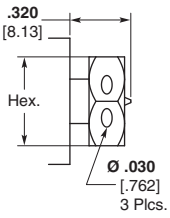
	Thread	Thread / Hex. / Min. Hole Dia. / Min. Hole Height	Thread / Hex.	Thread / Hex.
50 Series	**.190**-32 UNF 4.83	**.190**-32 UNF 4.83 / **.250** 6.35 / **.191** 4.85 / **.173** 4.39	**.190**-32 UNF 4.83 / **.250** 6.35	**.190**-32 UNF 4.83 / **.250** 6.35
70 Series	**.190**-32 UNF 4.83	**.216**-32 UNEF 5.49 / **.281** 7.14 / **.217** 5.51 / **.197** 5.00	**.216**-32 UNEF 5.49 / **.281** 7.14	**.216**-32 UNEF 5.49 / **.281** 7.14
93 Series	**.190**-32 UNF 4.83	**.250**-32 UNEF 6.35 / **.312** 7.92 / **.251** 6.38 / **.232** 5.89	**.250**-32 UNEF 6.35 / **.312** 7.92	**.250**-32 UNEF 6.35 / **.312** 7.92

Catalog 1308940
Revised 9-14

www.te.com

Dimensions are shown for reference purposes only. Specifications subject to change.

Dimensions are in millimeters unless otherwise specified.

USA: +1 800 522 6752
Asia Pacific: +86 0 400 820 6015
UK: +44 800 267 666

For additional support numbers please visit www.te.com

MICRODOT Standard Connectors — Caps, Hoods

Caps, Screw-On Series

For Receptacles and Jacks

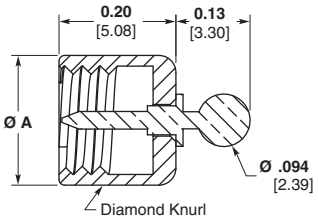

Fig. 1
With Grounding Pin

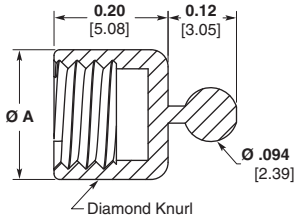

Fig. 2
Without Grounding Pin

Part No.	Fig.	Dim. A
S-50 Series		
033-0046-0001	1	**.235** 5.97
033-0056-0001	2	**.235** 5.97
S-70 Series		
033-0047-0001	1	**.255** 6.48
033-0057-0001	2	**.255** 6.48
S-93 Series		
033-0048-0001	1	**.315** 8.00
033-0058-0001	2	**.315** 8.00

Material — Brass per QQ-B-626

Finish — Silver plate per QQ-S-365, .0002 [.005] min.

Note: All caps can be supplied with .094 [2.39] Dia. bead chain and end ring. When ordering, specify chain length and end ring hole size (.130 [3.30], .140 [3.56], .167 [4.24], or .193 [4.90] Dia.)

Receptacle Hoods

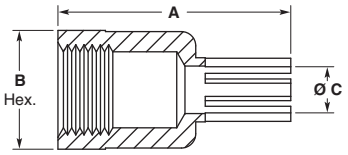

Part No.	Dim. A	Dim. B	Dim. C	Thread	For Receptacle Series
033-0067-0001	**.490** 12.45	**.250** 6.35	**.098** 2.49	**.190**-32 UNF 4.83	S-50, QC-50, QC-70
033-0068-0001	**.490** 12.45	**.250** 6.35	**.114** 2.90	**.216**-32 UNEF 5.49	S-70, SOS-50, SOS-70, SOS-93
033-0069-0001	**.490** 12.45	**.312** 7.92	**.156** 3.96	**.250**-32 UNEF 6.35	S-93, QC-93
033-0084-0001	**.490** 12.45	**.250** 6.35	**.156** 3.96	**.216**-32 UNEF 5.49	S-70, SOS-50, SOS-70, SOS-93
053-0147-0001	**.840** 21.34	**.437** 11.10	**.156** 3.96	**.375**-32 UNEF 9.53	Twinax/Triax Receptacle

Material — Brass per QQ-B-626

Finish — Silver plate per QQ-S-365, .0002 [.005] min.

Dimensions are shown for reference purposes only. Specifications subject to change.

Dimensions are in millimeters unless otherwise specified.

USA: +1 800 522 6752
Asia Pacific: +86 0 400 820 6015
UK: +44 800 267 666

For additional support numbers please visit www.te.com

MICRODOT Standard Connectors — Adapters

Feed-Thru Adapters for Screw-On Series

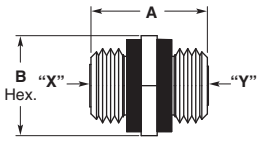

Fig. 1

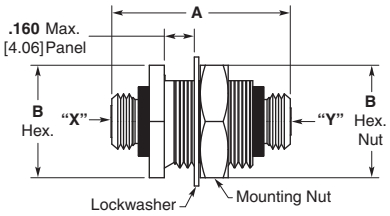

Fig. 2

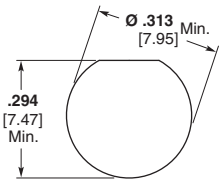

Mounting Hole

Part No.	Fig.	Dim. A	Dim. B	End "X" Is	End "Y" Is
033-0001-0001	1	**.300** 7.62	**.250** 6.35	S-50 Receptacle	S-50 Receptacle
033-0053-0001	2	**.600** 15.24	**.375** 9.53	S-50 Receptacle	S-50 Receptacle
033-0023-0001	1	**.400** 10.16	**.250** 6.35	S-70 Receptacle	S-70 Receptacle
033-0054-0001	2	**.600** 15.24	**.375** 9.53	S-70 Receptacle	S-70 Receptacle
033-0036-0001	1	**.410** 10.41	**.312** 7.92	S-93 Receptacle	S-93 Receptacle
033-0055-0001	2	**.600** 15.24	**.375** 9.53	S-93 Receptacle	S-93 Receptacle

BNC and TNC/MICRODOT Adapters for Screw-On, Slide-On, and Quick-Connect Series

For mating BNC/TNC connectors to MICRODOT standard connectors.

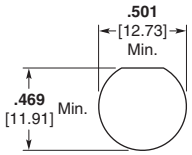

Mounting Hole

End "A" Is:	Configuration	End "B" Is:	50 Series Part No.	70 Series Part No.	93 Series Part No.
BNC Plug	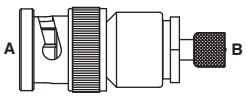	Screw-On (S) Type Plug	033-0103-0001	033-0107-0001	033-0111-0001
BNC Plug	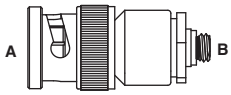	Screw-On Type Receptacle	033-0101-0001	033-0105-0001	033-0109-0001
BNC Receptacle	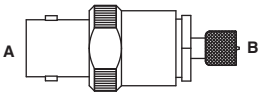	Screw-On (S) Type Plug	033-0104-0001	053-0108-0001	033-0112-0001
BNC Receptacle	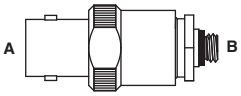	Screw-On (S) Type Receptacle	033-0102-0001	033-0106-0001	033-0110-0001
BNC Bulkhead Receptacle	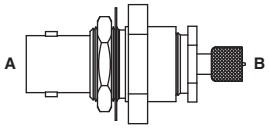	Screw-On (S) Type Plug	033-0127-0001[1]	—	033-0129-0001[1]

[1]Mounting information: Housing Hex. .688 [17.48], Mtg. Nut Hex. .625 [15.88], Max. Panel .090 [2.29].

Catalog 1308940
Revised 9-14

www.te.com

Dimensions are shown for reference purposes only. Specifications subject to change.

Dimensions are in millimeters unless otherwise specified.

USA: +1 800 522 6752
Asia Pacific: +86 0 400 820 6015
UK: +44 800 267 666

For additional support numbers please visit www.te.com

MICRODOT Standard Connectors — Adapters (Continued)

BNC and TNC/MICRODOT Adapters for Screw-On, Slide-On, and Quick-Connect Series (Continued)

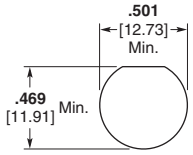

Mounting Hole

End "A" Is:	Configuration	End "B" Is:	50 Series Part No.	70 Series Part No.	93 Series Part No.
BNC Bulkhead Receptacle	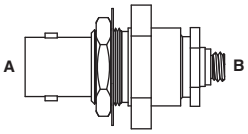	Screw-On (S) Type Receptacle	033-0090-0001[1]	033-0125-0001[1]	033-0126-0001[1]
TNC Plug	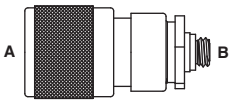	Screw-On (S) Type Receptacle	033-0141-0001	033-0143-0001	033-0145-0001
TNC Receptacle	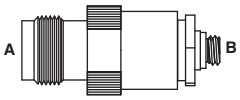	Screw-On (S) Type Receptacle	033-0153-0001	—	—
BNC Plug	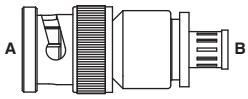	Slide-On (SOS) Type Plug	053-0339-0001	053-0339-0001	053-0339-0001
BNC Plug	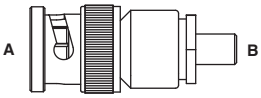	Slide-On (SOS) Type Receptacle	033-0081-0001	033-0081-0001	033-0081-0001
BNC Receptacle	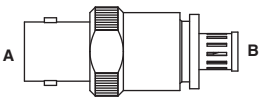	Slide-On (SOS) Type Plug	033-0092-0001	033-0092-0001	033-0092-0001
BNC Receptacle	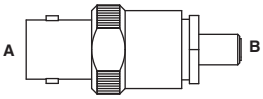	Slide-On (SOS) Type Receptacle	033-0082-0001	033-0082-0001	033-0082-0001
BNC Bulkhead Receptacle	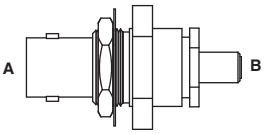	Slide-On (SOS) Type Receptacle	033-0124-0001[1]	033-0124-0001[1]	033-0124-0001[1]
BNC Plug	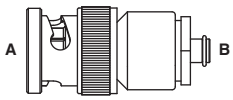	Quick-Connect (QC) Type Receptacle	033-0093-0001	033-0093-0001	033-0097-0001
BNC Receptacle	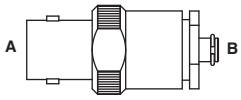	Quick-Connect (QC) Type Receptacle	033-0094-0001	033-0094-0001	—

[1]Mounting information: Housing Hex. .688 [17.48], Mtg. Nut Hex. .625 [15.88], Max. Panel .090 [2.29].

Catalog 1308940
Revised 9-14

www.te.com

Dimensions are shown for reference purposes only. Specifications subject to change.

Dimensions are in millimeters unless otherwise specified.

USA: +1 800 522 6752
Asia Pacific: +86 0 400 820 6015
UK: +44 800 267 666

For additional support numbers please visit www.te.com

MICRODOT Gold Plated Crimp Style Coaxial Connectors

Performance Data Summary
For Gold Plated Crimp Style Coaxial Connectors

Mechanical

Captive Contacts — Terminated connector contacts captivated from movement in both directions.

Cable Retention —
50 Ohm connectors, 15 lb. min.
70 Ohm connectors, 25 lb. min.
93 Ohm connectors, 25 lb. min.

Recommended Coupling Torque (Threaded Interface) — 8 inch/pounds max. [.904 Nm]

Recommended Receptacle Mounting Torque (Threaded Interface) — 8 inch/pounds max. [.904 Nm]

Contact Protection (Unmated) — Pin contact protected by coupling nut. Socket protected by insulator and housing.

Assembly Methods

Straight Plugs & Jacks —
Cable Inner Conductor — Crimped to contact.
Cable Shield — Crimped under housing.

Right-Angle Plugs —
Cable Inner Conductor — Crimped to contact.
Cable Shield — Crimped under housing.

Environmental

Temperature Range (Continuous Service) — -80°F to +392°F. [-62°C to +200°C].

Vibration[1,2] — MIL-STD-202, Method 204, Test condition B (15 G peak). No physical damage or electrical discontinuities in excess of 1 microsecond.

Shock[1,2] — MIL-STD-202, Method 213, Test Condition H. No physical damage or electrical discontinuity after shock.

Thermal Shock — MIL-STD-202, Method 107, Test Condition C.

Moisture Resistance[1] — MIL-STD-202, Method 106.

Salt Spray[1] — MIL-STD-202, Method 101, Test Condition B (48 hours).

Electrical

Impedance — Designed to be compatible with 50, 70, or 93 Ohm miniature coaxial cable.

Dielectric Withstanding Voltage — 1000 volts RMS at sea level.

Contact Resistance — 4 milliohms max., D.C.

Contact Capacity — 3 amps, D.C.

Insulation Resistance — 5 x 10^3 Megohms min. @ 500 volts D.C.

Voltage Standing Wave Ratio[3] (VSWR) — Typical 50 Ohm series, 1.2 max. to 2 GHz.

Materials

Housing, Nut, Inner Sleeve — Brass per ASTM-B-16, 35% Zinc.

Insulator — PTFE per ASTM-D-1710.

Pin & Socket Contacts — Beryllium Copper per ASTM-B-196.

Middle Sleeve — Copper Alloy.

Facial Seal, Sealing Sleeve & Gasket — Silicone Rubber per ZZ-R-765.

Lockwasher — #425 Bronze Alloy.

Plating

Contacts, Housing, Nut, Inner Sleeve, Middle Sleeve, Lockwasher — Gold per MIL-G-45204, Type II, Grade C, Class 1.

Notes:
[1]Screw-On Series threaded interface.
[2]TE Connectivity recommends the use of wired connectors in vibration and shock environments. See individual specifications for connectors with wire holes.
[3]VSWR is a system specification. Where performance is critical, purchase TE cable assemblies (See page 2-138) and specify VSWR testing and mating connector part numbers.

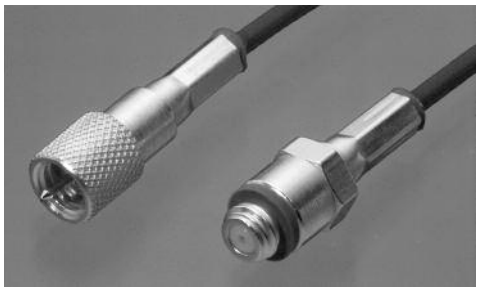

Catalog 1308940
Revised 9-14

www.te.com

Dimensions are shown for reference purposes only. Specifications subject to change.

Dimensions are in millimeters unless otherwise specified.

USA: +1 800 522 6752
Asia Pacific: +86 0 400 820 6015
UK: +44 800 267 666

For additional support numbers please visit www.te.com

MICRODOT Gold Plated Crimp Style Coaxial Connectors — Screw-On Series

Straight Plugs

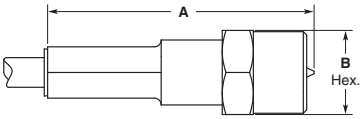

Fig. 1
Partial Hex. Nut

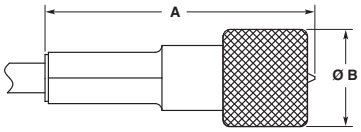

Fig. 2
Knurl Nut

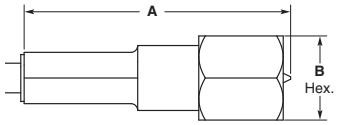

Fig. 3
Full Hex. Nut

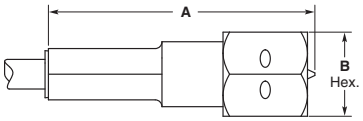

Fig. 4
Hex. Nut w/ 3 Safety Wire Holes

Part No.	Fig.	Dim. A	Dim. B	Cable Max.	Special Features	Instruction Sheet No.	Former MICRODOT I.S. No.
50 Ohm Series .190 [4.83] -32 UNF-2B Thread							
132-0112-0001	1	**.800** 20.32	**.250** 6.35	**.088** 2.24		408-8508	RF-ASMB-8
132-0112-0002	2	**.800** 20.32	**.250** 6.35	**.088** 2.24		408-8508	RF-ASMB-8
132-0112-0003	3	**.800** 20.32	**.250** 6.35	**.088** 2.24		408-8508	RF-ASMB-8
132-0112-0004	4	**.800** 20.32	**.250** 6.35	**.088** 2.24		408-8508	RF-ASMB-8
132-0113-0001	1	**.800** 20.32	**.250** 6.35	**.088** 2.24	With environmental seal	408-8508	RF-ASMB-8
132-0113-0002	2	**.800** 20.32	**.250** 6.35	**.088** 2.24	With environmental seal	408-8508	RF-ASMB-8
132-0113-0003	3	**.800** 20.32	**.250** 6.35	**.088** 2.24	With environmental seal	408-8508	RF-ASMB-8
132-0113-0004	4	**.800** 20.32	**.250** 6.35	**.088** 2.24	With environmental seal	408-8508	RF-ASMB-8
132-0114-0001	1	**.800** 20.32	**.250** 6.35	**.110** 2.79		408-8508	RF-ASMB-8
132-0114-0002	2	**.800** 20.32	**.250** 6.35	**.110** 2.79		408-8508	RF-ASMB-8
132-0114-0003	3	**.800** 20.32	**.250** 6.35	**.110** 2.79		408-8508	RF-ASMB-8
132-0114-0004	4	**.800** 20.32	**.250** 6.35	**.110** 2.79		408-8508	RF-ASMB-8
132-0115-0001	1	**.800** 20.32	**.250** 6.35	**.110** 2.79	With environmental seal	408-8508	RF-ASMB-8
132-0115-0002	2	**.800** 20.32	**.250** 6.35	**.110** 2.79	With environmental seal	408-8508	RF-ASMB-8
132-0115-0003	3	**.800** 20.32	**.250** 6.35	**.110** 2.79	With environmental seal	408-8508	RF-ASMB-8
132-0115-0004	4	**.800** 20.32	**.250** 6.35	**.110** 2.79	With environmental seal	408-8508	RF-ASMB-8
132-0509-0002	2	**.800** 20.32	**.250** 6.35	**.116** 2.95	Dual shield cable version of RG 188 & 316	408-8508	RF-ASMB-8
70 Ohm Series .216 [5.49] -32 UNEF-2B Thread							
132-0200-0001	1	**.800** 20.32	**.281** 7.14	**.110** 2.79		408-8508	RF-ASMB-8
132-0200-0002	2	**.800** 20.32	**.290** 7.37	**.110** 2.79		408-8508	RF-ASMB-8
132-0200-0003	3	**.800** 20.32	**.281** 7.14	**.110** 2.79		408-8508	RF-ASMB-8
132-0200-0004	4	**.800** 20.32	**.281** 7.14	**.110** 2.79		408-8508	RF-ASMB-8
132-0201-0001	1	**.800** 20.32	**.281** 7.14	**.110** 2.79	With environmental seal	408-8508	RF-ASMB-8
132-0201-0002	2	**.800** 20.32	**.290** 7.37	**.110** 2.79	With environmental seal	408-8508	RF-ASMB-8
132-0201-0003	3	**.800** 20.32	**.281** 7.14	**.110** 2.79	With environmental seal	408-8508	RF-ASMB-8
132-0201-0004	4	**.800** 20.32	**.281** 7.14	**.110** 2.79	With environmental seal	408-8508	RF-ASMB-8

Catalog 1308940
Revised 9-14

www.te.com

Dimensions are shown for reference purposes only. Specifications subject to change.

Dimensions are in millimeters unless otherwise specified.

USA: +1 800 522 6752
Asia Pacific: +86 0 400 820 6015
UK: +44 800 267 666

For additional support numbers please visit www.te.com

MICRODOT Gold Plated Crimp Style Coaxial Connectors — Screw-On Series (Continued)

Straight Plugs (Continued)

Part No.	Fig.	Dim. A	Dim. B	Cable Max.	Special Features	Instruction Sheet No.	Former MICRODOT I.S. No.
93 Ohm Series .250 [6.35] -32 UNEF-2B Thread							
132-0300-0001	1	**.795** 20.19	**.312** 7.92	**.155** 3.94		408-8508	RF-ASMB-8
132-0300-0002	2	**.795** 20.19	**.320** 8.13	**.155** 3.94		408-8508	RF-ASMB-8
132-0300-0003	3	**.795** 20.19	**.312** 7.92	**.155** 3.94		408-8508	RF-ASMB-8
132-0300-0004	4	**.795** 20.19	**.312** 7.92	**.155** 3.94		408-8508	RF-ASMB-8
132-0301-0001	1	**.795** 20.19	**.312** 7.92	**.155** 3.94	With environmental seal	408-8508	RF-ASMB-8
132-0301-0002	2	**.795** 20.19	**.320** 8.13	**.155** 3.94	With environmental seal	408-8508	RF-ASMB-8
132-0301-0003	3	**.795** 20.19	**.312** 7.92	**.155** 3.94	With environmental seal	408-8508	RF-ASMB-8
132-0301-0004	4	**.795** 20.19	**.312** 7.92	**.155** 3.94	With environmental seal	408-8508	RF-ASMB-8

Right-Angle Plugs

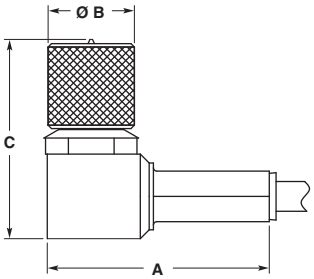

Knurl Nut

Part No.	Dim. A	Dim. B	Dim. C	Cable Jacket Max.	Special Features	Instruction Sheet No.	Former MICRODOT I.S. No.
50 Ohm Series .190 [4.83] -32 UNF-2B Thread							
132-0116-0002	**.660** 16.76	**.250** 6.35	**.620** 15.75	**.088** 2.24		408-8509	RF-ASMB-11
132-0117-0002	**.660** 16.76	**.250** 6.35	**.620** 15.75	**.088** 2.24	With environmental seal	408-8509	RF-ASMB-11
132-0118-0002	**.695** 17.65	**.250** 6.35	**.650** 16.51	**.110** 2.79		408-8509	RF-ASMB-11
132-0119-0002	**.695** 17.65	**.250** 6.35	**.650** 16.51	**.110** 2.79	With environmental seal	408-8509	RF-ASMB-11
70 Ohm Series .216 [5.49] -32 UNEF-2B Thread							
132-0202-0002	**.695** 17.65	**.290** 7.37	**.650** 16.51	**.110** 2.79		408-8509	RF-ASMB-11
132-0203-0002	**.695** 17.65	**.290** 7.37	**.650** 16.51	**.110** 2.79	With environmental seal	408-8509	RF-ASMB-11
93 Ohm Series .250 [6.35] -32 UNEF-2B Thread							
132-0302-0002	**.710** 18.03	**.320** 8.13	**.680** 17.27	**.155** 3.94		408-8509	RF-ASMB-11
132-0303-0002	**.710** 18.03	**.320** 8.13	**.680** 17.27	**.155** 3.94	With environmental seal	408-8509	RF-ASMB-11

Dimensions are shown for reference purposes only. Specifications subject to change.

Dimensions are in millimeters unless otherwise specified.

USA: +1 800 522 6752
Asia Pacific: +86 0 400 820 6015
UK: +44 800 267 666

For additional support numbers please visit www.te.com

MICRODOT Gold Plated Crimp Style Coaxial Connectors — Screw-On Series (Continued)

Jacks

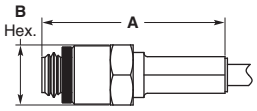

Fig. 1

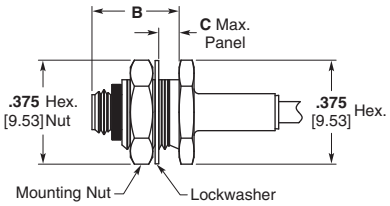

Fig. 2

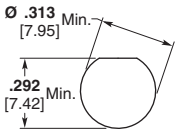

Mounting Hole

Part No.	Fig.	Dim. A	Dim. B	Dim. C	Cable Jacket Max.	Special Features	Instruction Sheet No.	Former MICRODOT I.S. No.
50 Ohm Series .190 [4.83] -32 UNF-2B Thread								
131-0134-0001	1	**.770** 19.56	**.250** 6.35	—	**.088** 2.24		408-8508	RF-ASMB-8
131-0135-0001	2	**.770** 19.56	**.360** 9.14	**.105** 2.67	**.088** 2.24		408-8508	RF-ASMB-8
131-0136-0001	1	**.770** 19.56	**.250** 6.35	—	**.110** 2.79		408-8508	RF-ASMB-8
131-0137-0001	2	**.770** 19.56	**.360** 9.14	**.105** 2.67	**.110** 2.79		408-8508	RF-ASMB-8
131-0150-0001	1	**.770** 19.56	**.250** 6.35	—	**.116** 2.95	Dual Shield Cable Version of RG 188 & 316	408-8508	RF-ASMB-8
131-0151-0001	2	**.770** 19.56	**.360** 9.14	**.105** 2.67	**.116** 2.95	Dual Shield Cable Version of RG 188 & 316	408-8508	RF-ASMB-8
70 Ohm Series .216 [5.49] -32 UNEF-2B Thread								
131-0200-0001	1	**.770** 19.56	**.281** 7.14	—	**.110** 2.79		408-8508	RF-ASMB-8
131-0201-0001	2	**.770** 19.56	**.360** 9.14	**.100** 2.54	**.110** 2.79		408-8508	RF-ASMB-8
93 Ohm Series .250 [6.35] -32 UNEF-2B Thread								
131-0300-0001	1	**.760** 19.30	**.312** 7.92	—	**.155** 3.94		408-8508	RF-ASMB-8
131-0301-0001	2	**.760** 19.30	**.350** 8.89	**.095** 2.41	**.155** 3.94		408-8508	RF-ASMB-8

MICRODOT Gold Plated Crimp Style Coaxial Connectors — Screw-On Series (Continued)

Receptacles

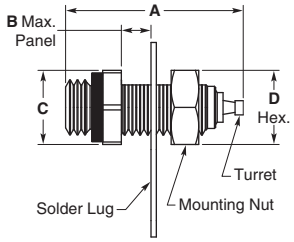

Fig. 1

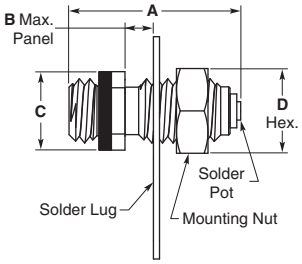

Fig. 2

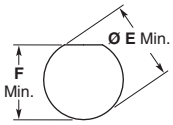

Mounting Hole
for Fig. 1 & 2

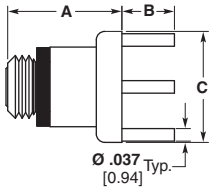

Fig. 3

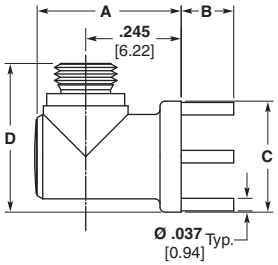

Fig. 4

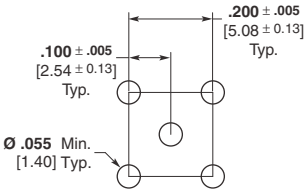

Mounting Pattern
for Fig. 3 & 4

Part No.	Fig.	Dim. A	Dim. B	Dim. C	Dim. D	Dim. E	Dim. F	Special Features
50 Ohm Series .190 [4.83] -32 UNF-2A Thread								
131-0138-0002	1	**.605** 15.37	**.160** 4.06	**.250** 6.35 Hex.	**.250** 6.35	**.191** 4.85	**.173** 4.39	
131-0139-0002	2	**.515** 13.08	**.150** 3.81	**.187** 4.75 Wrench Flats	**.250** 6.35	**.191** 4.85	—	No Mounting Flat
131-0140-0001	2	**.255** 6.48	—	**.187** 4.75 Wrench Flats	—	**.190** 4.83 -32 Thd.	—	No Nut or Solder Lug, Threads into Panel
131-0141-0002	3	**.340** 8.64	**.155** 3.94	**.330** 8.38 Dia.	—	—	—	
131-0142-0002	4	**.425** 10.80	**.155** 3.94	**.330** 8.38 Dia.	**.480** 12.19	—	—	
70 Ohm Series .216 [5.49] -32 UNEF-2A Thread								
131-0202-0002	1	**.605** 15.37	**.160** 4.06	**.250** 6.35 Hex.	**.281** 7.14	**.217** 5.51	**.197** 5.00	
131-0705-0001	3	**.340** 8.64	**.155** 3.94	**.330** 8.38 Dia.	—	—	—	
93 Ohm Series .250 [6.35] -32 UNEF-2A Thread								
131-0303-0002	3	**.340** 8.64	**.155** 3.94	**.330** 8.38 Dia.	—	—	—	
131-0304-0001	4	**.425** 10.80	**.155** 3.94	**.330** 8.38 Dia.	**.480** 12.19	—	—	
131-0904-0001	1	**.605** 15.37	**.160** 4.06	**.312** 7.92 Hex.	**.312** 7.92	**.251** 6.38	**.232** 5.89	

Gold Plated Crimp Style Coaxial Connectors Assembly Tools

Table 1. Contact Crimp Tools

MICRODOT Part No.	Manufacturers Part No.
010-0065-0000	Astro Tool A-810-3

Table 2. Housing Crimp Tools

MICRODOT Part No.	Thomas & Betts Part No.	Max. Cable Diameter
010-0081-0000	WT-400	**.088** [2.24]
010-0082-0000	WT-402	**.110** [2.79]
010-0083-0000	WT-406	**.155** [3.94]

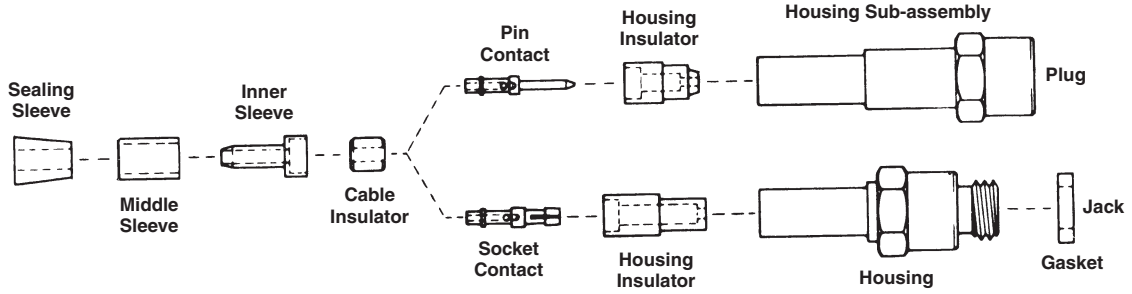

Dimensions are shown for reference purposes only. Specifications subject to change.

Dimensions are in millimeters unless otherwise specified.

USA: +1 800 522 6752
Asia Pacific: +86 0 400 820 6015
UK: +44 800 267 666

For additional support numbers please visit www.te.com

MICRODOT LEPRA/CON Ultra-Miniature Connectors

Performance Data Summary
For LEPRA/CON Connectors

Mechanical

Captive Contacts — Terminated connector contacts captivated from movement in both directions.

Cable Retention — 10 lb. min. when properly assembled to RG196/U and RG178/U cable.

Recommended Coupling Torque (Threaded Interface) — 24 inch/ounces max.

Recommended Receptacle Mounting Torque (All Series) — 24 inch/ounces max.

Typical Cable Acceptance Dimensions — Inner conductor: .012 [0.31] nom. Dielectric: .039 [0.99] max. Shield: .059 [1.50] max. Jacket: .081 [2.06] max.

Contact Protection (Unmated) — Twist pin contact protected from damage by insulator. Tube socket protected by connector housing.

Assembly Methods

Straight Plugs & Jacks — Cable Inner Conductor: Crimped to contact. Cable Shield: Crimped under housing.

Right-Angle Plugs — Cable Inner Conductor: Soldered to contact. Cable Shield: Crimped under housing.

Environmental

Temperature Range (Continuous Service) — -85°F to +392°F [-65°C to +200°C].

Vibration[1,2] — MIL-STD-202, Method 204, Test Condition B (15 G peaks). No physical damage or electrical discontinuities in excess of 1 microsecond.

Shock[1,2] — MIL-STD-202, Method 213, Test Condition H. No physical damage or electrical discontinuity after shock.

Thermal Shock — MIL-STD-202, Method 107, Test Condition C.

Moisture Resistance[1] — MIL-STD-202, Method 106.

Salt Spray[1] — MIL-STD-202, Method 101, Test Condition B (48 hours).

Electrical

Impedance — Designed to be compatible with 50 Ohm coaxial cable RG178/U.

Dielectric Withstanding Voltage — 450 volts RMS at sea level, 250 volts RMS at 50,000 ft [15,240 m], 150 volts RMS at 70,000 ft. [21,336 m]

Contact Resistance — 8 milliohms max., D.C.

Contact Capacity — 3 amps, D.C.

Insulation Resistance — 10^4 Megohms min. @ 500 volts D.C.

Voltage Standing Wave Ratio[3] (VSWR) — Typical 50 Ohm Series, 1.2 Maximum to 2 GHz.

Materials

Housing, Nut, Ferrule — Brass per ASTM-B-16.

Insulator — PTFE per ASTM-D-1710.

Pin & Socket Contact — Copper Alloy.

Crimp Sleeve — Copper Alloy.

Lockwasher — #425 Bronze Alloy.

Plating

Contacts, Housing, Nut, Ferrule, Crimp Sleeve, Lockwasher — Gold per MIL-G-45204, Type II, Grade C, Class 1.

Notes:

[1]Screw-On Series, threaded interface.

[2]TE Connectivity recommends the use of safety wired connectors in vibration and shock environments. See individual specifications with wire holes.

[3]VSWR is a system specification. Where performance is critical, purchase TE cable assemblies with Screw-On connectors (See page 2-140) and specify VSWR testing and mating connector part numbers.

Dimensions are shown for reference purposes only. Specifications subject to change.

Dimensions are in millimeters unless otherwise specified.

USA: +1 800 522 6752
Asia Pacific: +86 0 400 820 6015
UK: +44 800 267 666

For additional support numbers please visit www.te.com

MICRODOT LEPRA/CON Ultra-Miniature Connectors — Screw-On Series

Featuring Twist Pin, Pin and Socket Contacts, Standard Interface

MICRODOT twist pin, pin and socket contacts are used in LEPRA/CON connectors. Twist pin contact pins are produced from beryllium copper material with a gold-plated finish and constructed with helically-wound stress free cable of spring copper around a highly conductive soft copper core, terminated with a hemispherical weld. Twist pin contacts contain seven self-wiping spring surfaces, designed for consistent continuity and very low noise level. Twist pin contacts are self-aligning because of the contact-engaging-end configuration. The sockets are a closed entry tubular-type contact, made of gold-plated copper alloy.

The connectors are designed to be used with coaxial cables RG196/U and RG178/U.

The connectors are designed with the contacts completely protected for reliability. The use of twist pin contacts makes the connectors very rugged for their size.

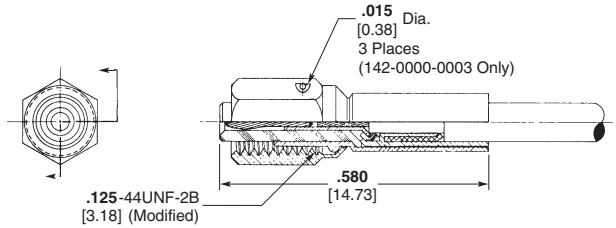

Straight Plugs[1]

Part No.	Nut Style
142-0000-0001	**.156** [3.96] Hex.
142-0000-0002	**.160** [4.06] Dia. Knurl
142-0000-0003	**.156** [3.96] Hex. w/ Safety Wire Holes

Assembly instructions: RF-ASMB-12

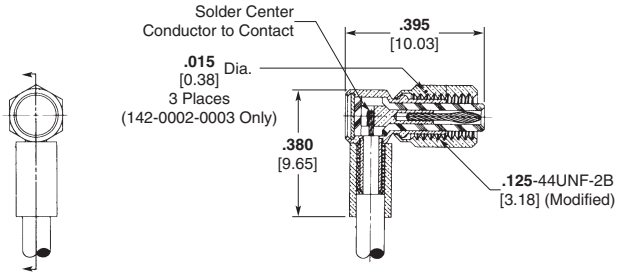

Right-Angle Plug[1]

Part No.	Nut Style
142-0002-0001	**.156** [3.96] Hex.
142-0002-0002	**.160** [4.06] Dia. Knurl
142-0002-0003	**.156** [3.96] Hex. w/ Safety Wire Holes

Assembly instructions: RF-ASMB-13

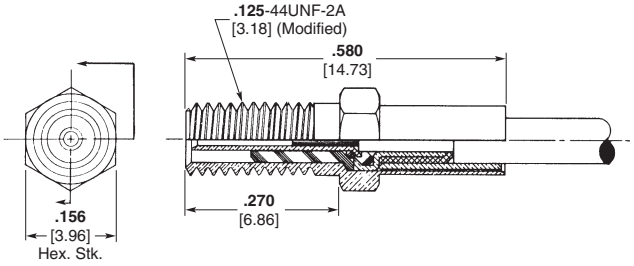

Jack[1]
Part Number 141-0000-0001
Instruction Sheet Number 408-8510
Former MICRODOT I.S. Number RF-ASMB-12

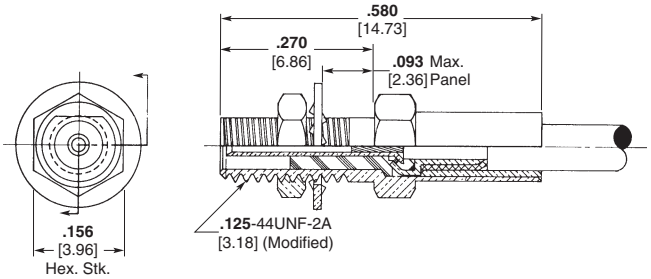

Bulkhead Jack[1]
Part Number 141-0001-0001
Instruction Sheet Number 408-8510
Former MICRODOT I.S. Number RF-ASMB-12

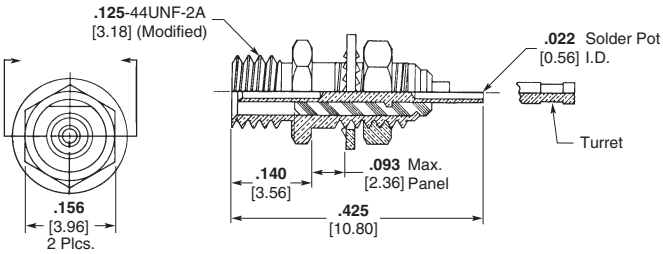

Front Mount Receptacle[1]

Part No.	Contact Tail
141-0002-0001	Turret
141-0002-0002	Solder Pot

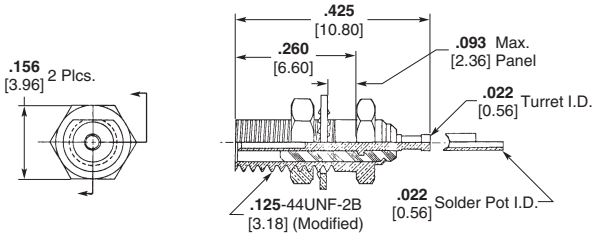

Rear Mount Receptacle[1]

Part No.	Contact Tail
141-0003-0001	Turret
141-0003-0002	Solder Pot

[1]Mounting hole pattern and assembly tools shown on page 2-134.

Catalog 1308940
Revised 9-14

www.te.com

Dimensions are shown for reference purposes only. Specifications subject to change.

Dimensions are in millimeters unless otherwise specified.

USA: +1 800 522 6752
Asia Pacific: +86 0 400 820 6015
UK: +44 800 267 666

For additional support numbers please visit www.te.com

MICRODOT LEPRA/CON Ultra-Miniature Connectors — Screw-On Series (Continued)

Featuring Twist Pin, Pin and Socket Contacts, Standard Interface (Continued)

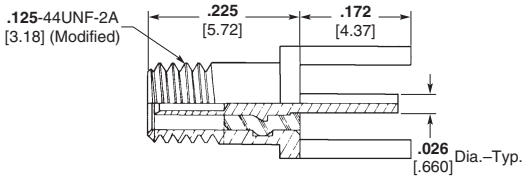

Straight Printed Circuit Receptacle[1]
Part No. 141-0004-0001

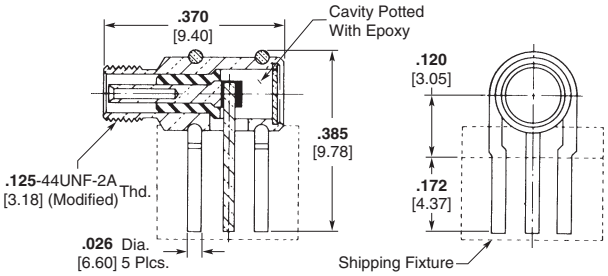

Right-Angle Printed Circuit Receptacle[1]
(Small Mounting Pattern)
Part Number 141-0019-0001

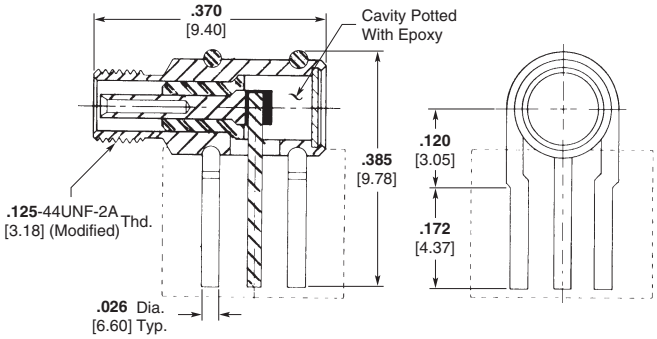

Right-Angle Printed Circuit Receptacle[1]
(Standard Mounting Pattern)
Part Number 141-0010-0001

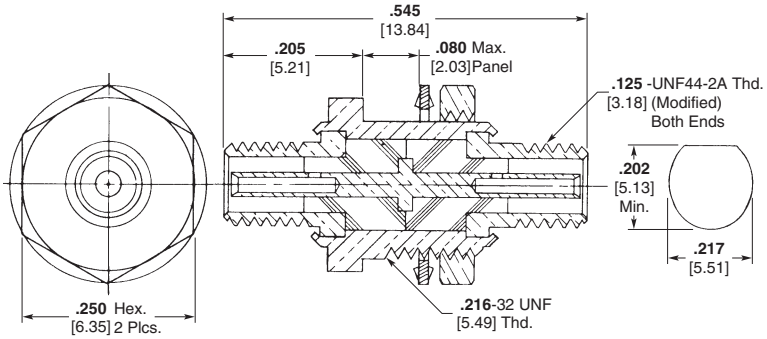

Feed-Thru Bulkhead Adapter
(Both Ends are Receptacle Interface)
Part Number 143-0005-0001

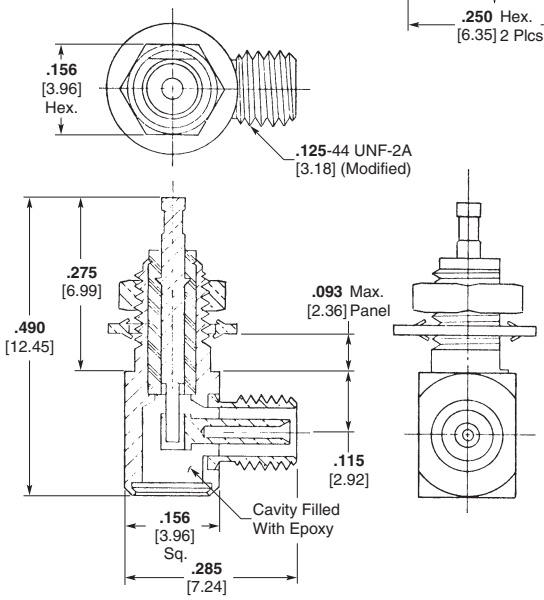

Right-Angle Receptacle[1]
Part Number 141-0013-0001

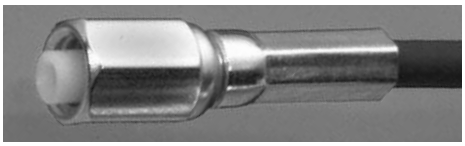

Straight Plug

[1]Mounting hole pattern and assembly tools shown on page 2-134.

Catalog 1308940
Revised 9-14

www.te.com

Dimensions are shown for reference purposes only. Specifications subject to change.

Dimensions are in millimeters unless otherwise specified.

USA: +1 800 522 6752
Asia Pacific: +86 0 400 820 6015
UK: +44 800 267 666

For additional support numbers please visit www.te.com

MICRODOT LEPRA/CON Ultra-Miniature Connectors — Screw-On Series (Continued)

Featuring Twist Pin, Pin and Socket Contacts with Locking Interface

The MICRODOT LEPRA/CON coaxial connector series is now offered with a unique locking interface feature. This new coupling design permits the user to lock the coaxial plug, when mated to its receptacle, preventing any axial rotation. This adaptation is especially popular on connector installations requiring straight or 90° cable terminations firmly held in a fixed position. The locking interface is especially suited for telecommunications and instrumentation applications.

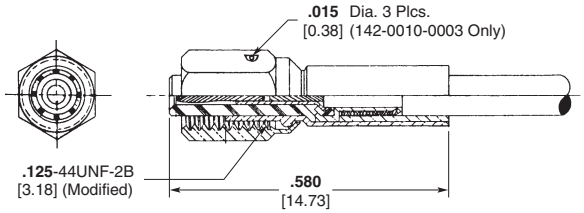

Straight Plug[1]

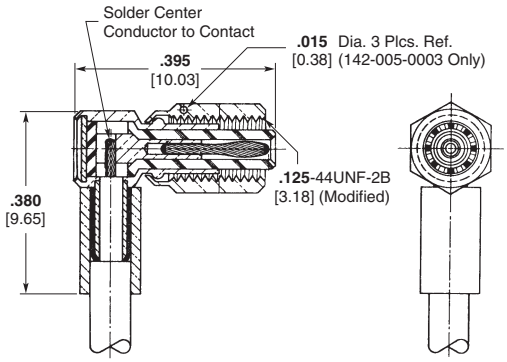

Right-Angle Plug[1]

Part No.	Nut Style
142-0010-0001	**.156** [3.96] Hex.
142-0010-0002	**.160** [4.06] Dia. Knurl
142-0010-0003	**.156** [3.96] Hex. w/ Safety Wire Holes

Assembly instructions: RF-ASMB-12, 142-0010-0001

Part No.	Nut Style
142-0005-0001	**.156** [3.96] Hex.
142-0005-0002	**.160** [4.06] Dia. Knurl
142-0005-0003	**.156** [3.96] Hex. w/ Safety Wire Holes

Assembly instructions: RF-ASMB-13, 142-0005-0001

[1]Assembly tools; page 2-134.

Catalog 1308940
Revised 9-14

www.te.com

Dimensions are shown for reference purposes only. Specifications subject to change.

Dimensions are in millimeters unless otherwise specified.

USA: +1 800 522 6752
Asia Pacific: +86 0 400 820 6015
UK: +44 800 267 666

For additional support numbers please visit www.te.com

MICRODOT LEPRA/CON Ultra-Miniature Connectors — Screw-On Series (Continued)

Featuring Twist Pin, Pin and Socket Contacts with Locking Interface
(Continued)

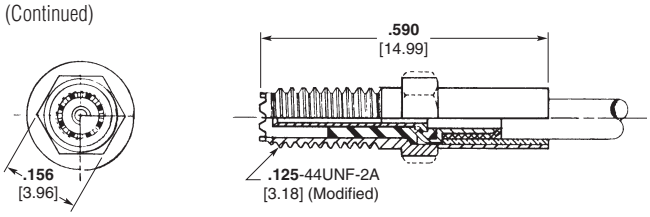

Straight Jack[1]
Part Number 141-0017-0001
Instruction Sheet Number 408-8510
Former MICRODOT I.S. Number RF-ASMB-12

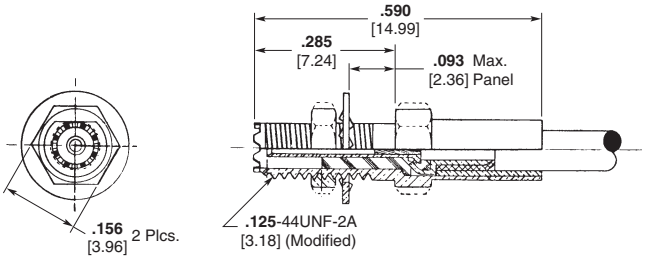

Bulkhead Jack[1]
Part Number 141-0014-0001
Instruction Sheet Number 408-8510
Former MICRODOT I.S. Number RF-ASMB-12

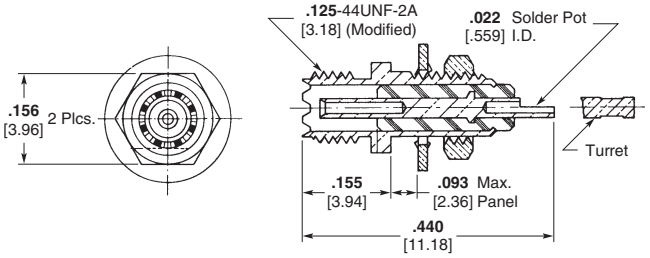

Front Mount Receptacle[1]

Part No.	Contact Tail
141-0012-0001	Solder Pot
141-0012-0002	Turret

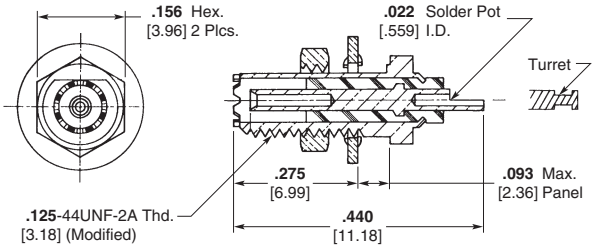

Rear Mount Receptacle w/ Locking Interface[1]

Part No.	Contact Tail
141-0011-0001	Turret
141-0011-0002	Solder Pot

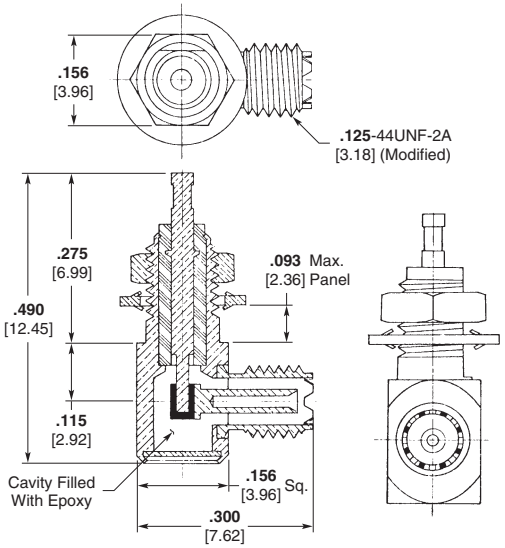

Right-Angle Receptacle[1]
Part Number 141-0020-0001

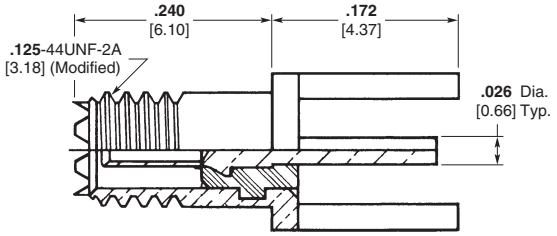

Straight Printed Circuit Receptacle[1]
Part Number 141-0015-0001

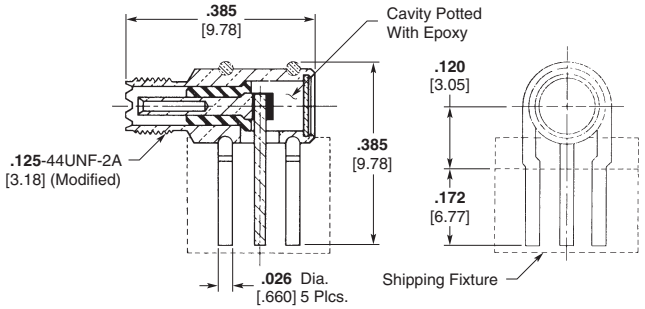

Right-Angle Printed Circuit Receptacle[1]
Part Number 141-0023-0001

[1]Mounting hole pattern and assembly tools shown on page 2-134.

Catalog 1308940
Revised 9-14

www.te.com

Dimensions are shown for reference purposes only. Specifications subject to change.

Dimensions are in millimeters unless otherwise specified.

USA: +1 800 522 6752
Asia Pacific: +86 0 400 820 6015
UK: +44 800 267 666

For additional support numbers please visit www.te.com

MICRODOT LEPRA/CON Ultra-Miniature Connectors — Slide-On Series

Featuring Twist Pin, Pin and Socket Contacts

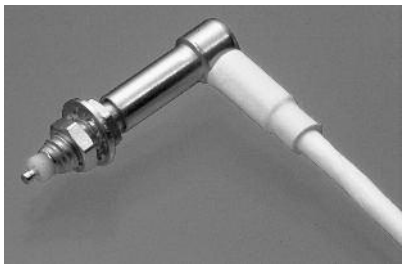

LEPRA/CON Slide-On Connectors offer a convenient mating style along with Ultra-miniature size. Inner contacts are twist pin tubular sockets in plugs and twist pin contacts for jacks and receptacles. Positive housing contact is provided by a three finger contact in the plug housing.

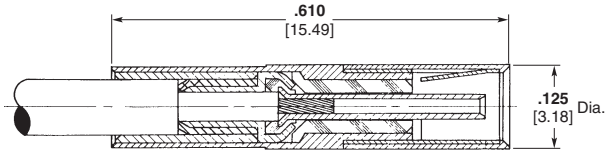

Straight Plug[1]
Part Number 142-1000-0001
Instruction Sheet Number 408-8512
Former MICRODOT I.S. Number RF-ASMB-15

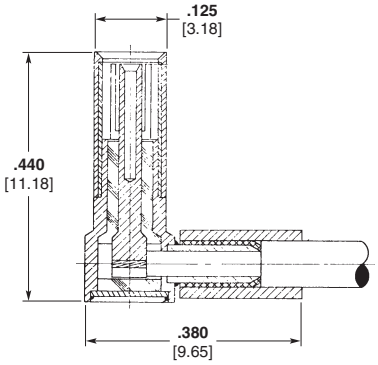

Right-Angle Plug[1]
Part Number 142-1002-0001
Instruction Sheet Number 408-8513
Former MICRODOT I.S. Number RF-ASMB-16

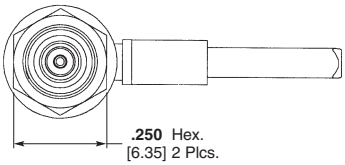

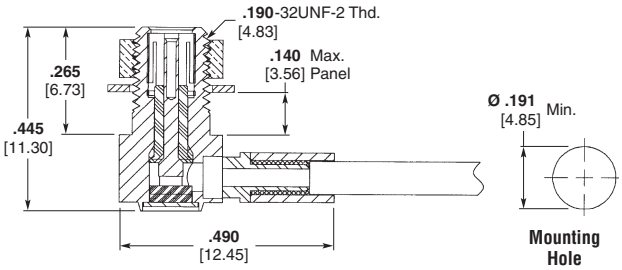

Right-Angle Bulkhead Mount Plug[1]
Part Number 142-1021-0001
Instruction Sheet Number 408-8519
Former MICRODOT I.S. Number RF-ASMB-76

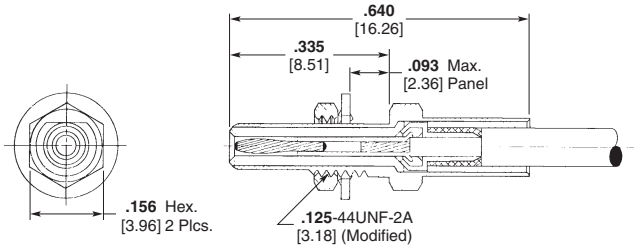

Straight Bulkhead Jack[1]
Part Number 141-1001-0001
Instruction Sheet Number 408-8512
Former MICRODOT I.S. Number RF-ASMB-15

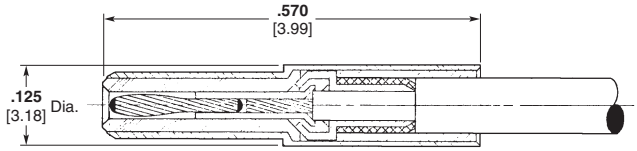

Straight Jack[1]
Part Number 141-1000-0001
Instruction Sheet Number 408-8512
Former MICRODOT I.S. Number RF-ASMB-15

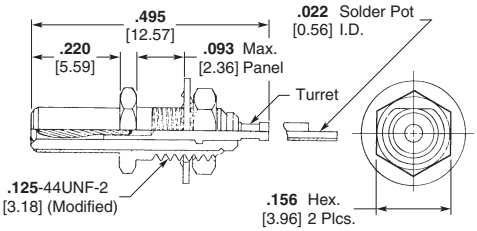

Front Mount Receptacle[1]

Part No.	Contact Tail
141-1002-0001	Turret
141-1002-0002	Solder Pot

[1]Mounting hole and assembly tools shown on page 2-134.

Catalog 1308940
Revised 9-14

www.te.com

Dimensions are shown for reference purposes only. Specifications subject to change.

Dimensions are in millimeters unless otherwise specified.

USA: +1 800 522 6752
Asia Pacific: +86 0 400 820 6015
UK: +44 800 267 666

For additional support numbers please visit www.te.com

MICRODOT LEPRA/CON Ultra-Miniature Connectors — Slide-On Series (Continued)

Featuring Twist Pin, Pin and Socket Contacts
(Continued)

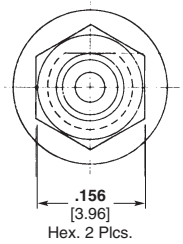

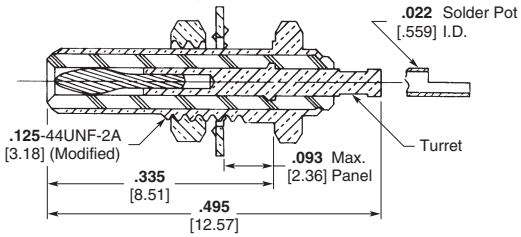

Rear Mount Receptacle

Part No.	Contact Tail
141-1003-0001	Turret
141-1003-0002	Solder Pot

Mounting Hole shown below.

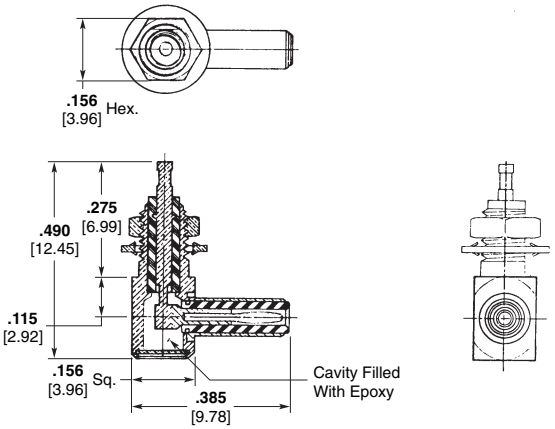

Right-Angle Receptacle
Mounting Hole Shown Below
Part Number 141-1012-0001

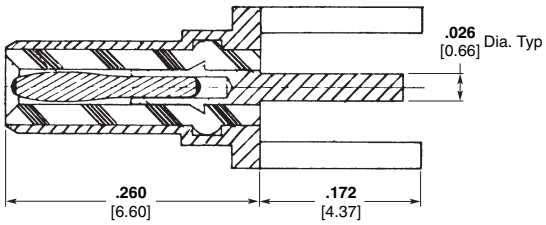

Straight Printed Circuit Receptacle
Mounting Hole Pattern Shown Below
Part Number 141-1004-0001

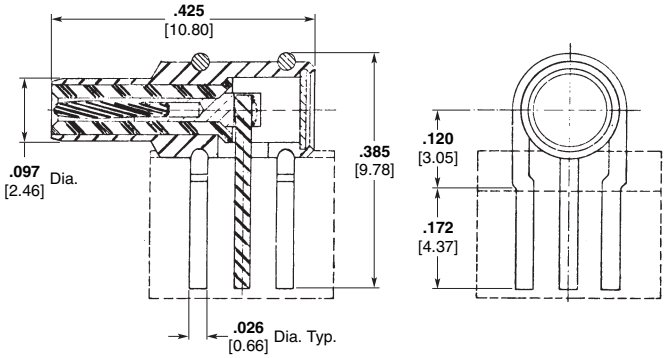

Right-Angle Printed Circuit Receptacle
Mounting Hole Pattern Shown Below
Part Number 141-1005-0001

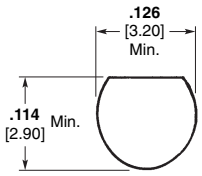

Bulkhead Receptacle Mounting Hole

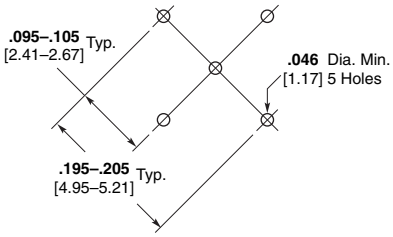

Standard Pattern

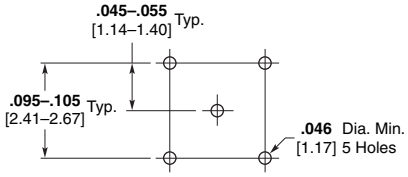

Small Pattern
Connectors 141-0019-0001
and 141-0023-0001 Only

Printed Circuit Receptacle Mounting Hole Pattern

LEPRA/CON Connector Assembly Tools

Housing Crimp Tool

Part No.	Thomas & Betts Part No.
010-0132-0000	WT-419

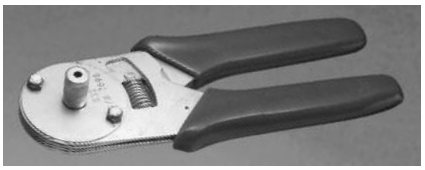

Contact Crimp Tool

Connector	Contact Crimp No.	Astro Tool Part No.
Straight Connector Only	010-0150-0000	A-826-1
141-1001-0001	010-0161-0000	827

Catalog 1308940
Revised 9-14

www.te.com

Dimensions are shown for reference purposes only. Specifications subject to change.

Dimensions are in millimeters unless otherwise specified.

USA: +1 800 522 6752
Asia Pacific: +86 0 400 820 6015
UK: +44 800 267 666

For additional support numbers please visit www.te.com

MICRODOT LEPRA/CON Ultra-Miniature Connectors (Continued)

BNC / LEPRA/CON Connector Adapters

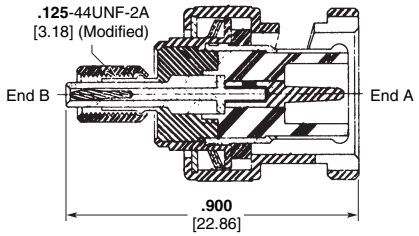

End "B" is MICRODOT Screw-On Plug **End "A" is BNC Plug**

Part Number 143-0001-0001

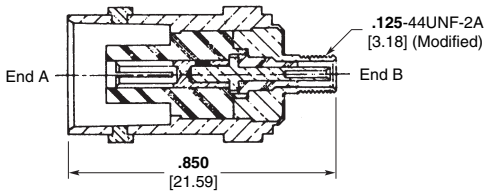

End "A" is BNC Receptacle **End "B" is MICRODOT Screw-On Receptacle**

Part Number 143-0003-0001

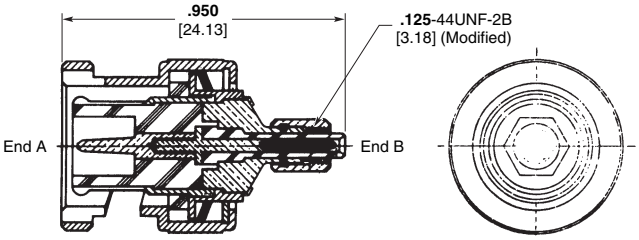

End "A" is BNC Plug **End "B" is MICRODOT Screw-On Plug with Locking Interface**

Part Number 143-0029-0001

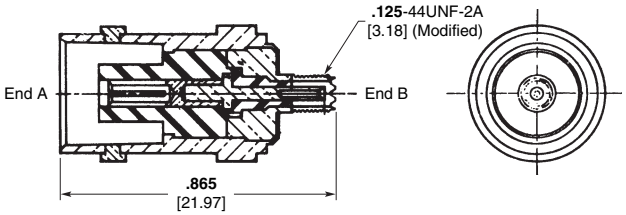

End "A" is BNC Receptacle **End "B" is MICRODOT Screw-On Receptacle with Locking Interface**

Part Number 143-0032-0001

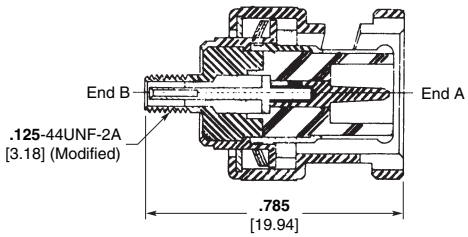

End "B" is Screw-On Receptacle **End "A" is BNC Plug**

Part Number 143-0002-0001

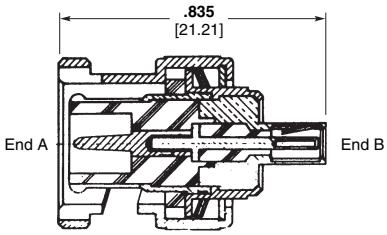

End "A" is BNC Plug **End "B" is MICRODOT Slide-On Plug**

Part Number 143-1000-0001

Catalog 1308940
Revised 9-14

www.te.com

Dimensions are shown for reference purposes only. Specifications subject to change.

Dimensions are in millimeters unless otherwise specified.

USA: +1 800 522 6752
Asia Pacific: +86 0 400 820 6015
UK: +44 800 267 666

For additional support numbers please visit www.te.com

MICRODOT LEPRA/CON Ultra-Miniature Connectors (Continued)

BNC / LEPRA/CON Connector Adapters
(Continued)

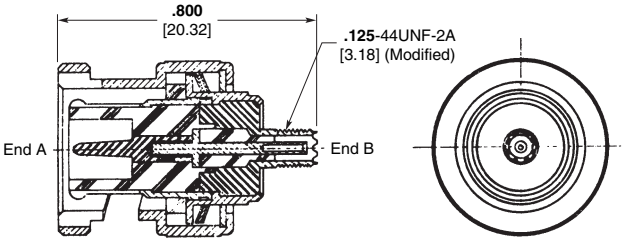

End "A" is BNC Plug **End "B" is MICRODOT Receptacle with Locking Interface**

Part Number 143-0031-0001

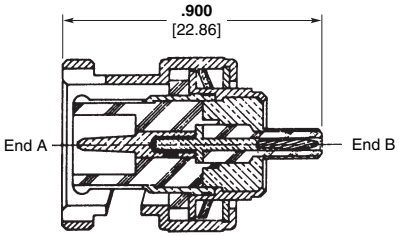

End "A" is BNC Plug **End "B" is MICRODOT Slide-On Receptacle**

Part Number 143-1002-0001

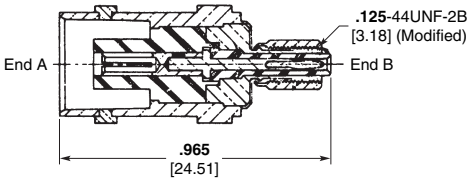

End "A" is BNC Receptacle **End "B" is MICRODOT Screw-On Plug**

Part Number 143-0004-0001

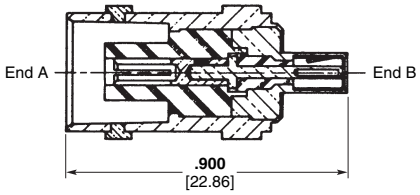

End "A" is BNC Receptacle **End "B" is MICRODOT Slide-On Plug**

Part Number 143-1001-0001

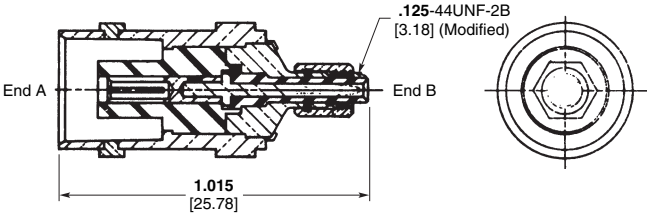

End "A" is BNC Receptacle **End "B" is MICRODOT Screw-On Plug with Locking Interface**

Part Number 143-0030-0001

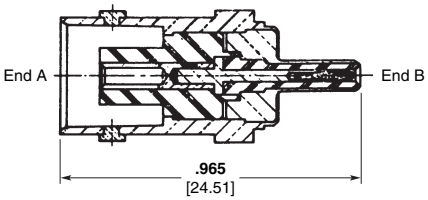

End "A" is BNC Receptacle **End "B" is MICRODOT Slide-On Receptacle**

Part Number 143-1003-0001

Dimensions are shown for reference purposes only. Specifications subject to change.

Dimensions are in millimeters unless otherwise specified.

USA: +1 800 522 6752
Asia Pacific: +86 0 400 820 6015
UK: +44 800 267 666

For additional support numbers please visit www.te.com

MICRODOT LEPRA/CON Ultra-Miniature Connectors — Snap-Lock Series

Product Facts

- **Simple coupling design eliminates the need for tools and saves assembly time**
- **Positive locking mechanism provides its own fail-safe features**
- **Inspection of the mated connector is fast, simple and effective**
- **Push-Pull design allows higher panel density**
- **Quick-connect and disconnect features**

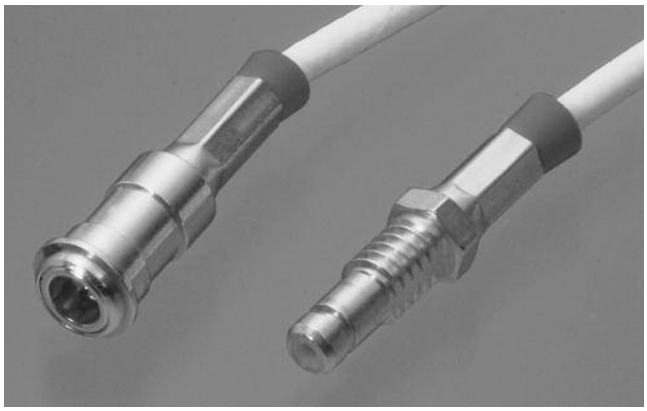

Performance Data Summary
For Snap-Lock Connectors

Electrical

Impedance — Designed to be compatible with 50 Ohm coaxial cables (Dual Shield RG 196).

Dielectric Withstanding Voltage — 450 volts RMS at sea level (Operating).

Contact Resistance — 8 milliohms max. at 3 amps. Average resistance: 4 milliohms

Insulation Resistance — 10^4 megohms min.

Voltage Standing Wave Ratio (VSWR) — 3.4 max., 1.3 min. to 12 GHz.

Environmental

Temperature Range — -85°F to +257°F [-65°C to +125°C].

Vibration — MIL-STD-202, Method 204, Test condition D. No change in electrical discontinuity in excess of 1 microsecond.

Shock — MIL-STD-202, Method 213A, Test Condition C. No electrical discontinuity or evidence of physical damage.

Mechanical

Cable Acceptance Dimensions —
Center conductor — .012 [0.31] nom.
Dielectric — .040 [1.02] max.
Shield — .080 [2.03] max.
Jacket — .090 [2.29] max..

All-Crimp Assembly — Center contacts and shield are crimped individually.

Durability — 500 mating cycles.

Materials

Body and Body Components — Brass per QQ-B-626 Comp 360.

Contact Material — Copper Alloy.

Crimp Sleeves — Leaded Copper.

Insulators — PTFE per ASTM-D-1710.

Lockwashers — #425 Bronze Alloy.

Plating — Gold per MIL-G-45204, Type II, Grade C, Class 1.

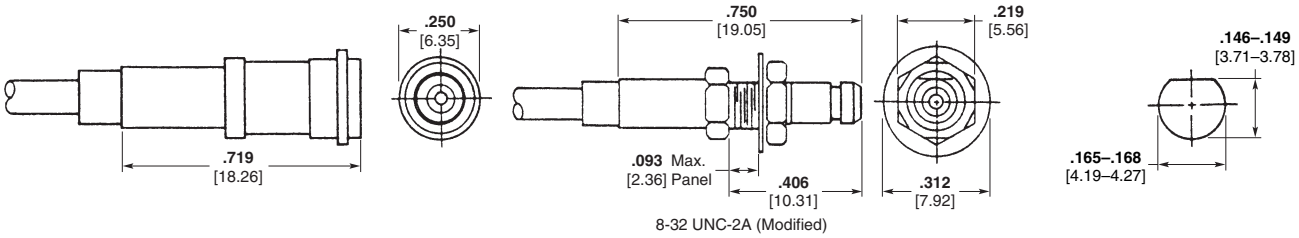

Straight Plug
Part Number 144-0001-0001

Bulkhead Jack, Rear Mount
Part Number 145-0001-0001

"D" Hole Dimensions
For Panel Mounting

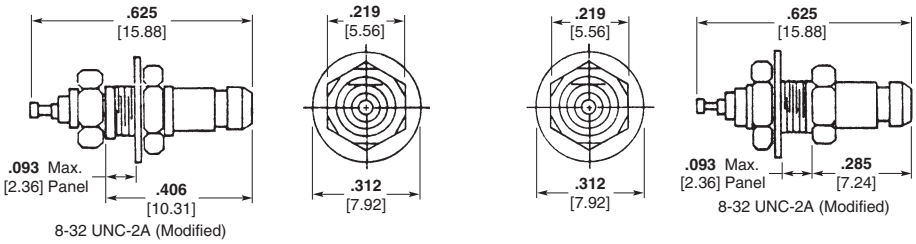

Receptacle, Rear Mount
Part Number 145-0003-0001

Receptacle, Front Mount
Part Number 145-0002-0001

Connector/Cable Assembly Crimp Tools — Center Contact and Shield

Tool	Part No.
SKT & Pin Crimp	010-1004-0000
Housing Crimp	010-0081-0000

Catalog 1308940
Revised 9-14

www.te.com

Dimensions are shown for reference purposes only. Specifications subject to change.

Dimensions are in millimeters unless otherwise specified.

USA: +1 800 522 6752
Asia Pacific: +86 0 400 820 6015
UK: +44 800 267 666

For additional support numbers please visit www.te.com

MICRODOT Cable Assemblies

Capability

The experience TE Connectivity has gained through years of pioneering efforts in the development of MICRODOT miniaturized cable and connectors is available to customers in the assembly of complex cable/connector combinations. This experience offers the customer low cost and no tooling charges, precision construction, thorough inspection and prompt delivery. The capability also makes it possible for the designer to specify a complete assembly or harness with the understanding that TE will deliver a custom fabrication equal in quality to the MICRODOT components it contains. These assemblies are made to the customer's specifications or are designed by the Company's experienced engineers to fit particular requirements. Special features are light weight, reduced size, high operating temperatures and comprehensive layouts.

How To Order

1. Specify MICRODOT part numbers
   A. Connector, one end
   B. Connector, other end
   C. Cable
2. Specify normal length
   A. Overall length

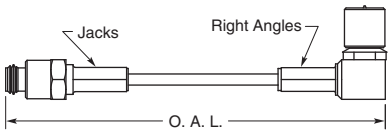

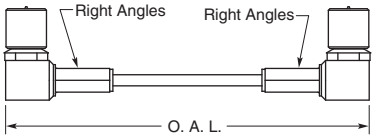

   B. Or length between connectors

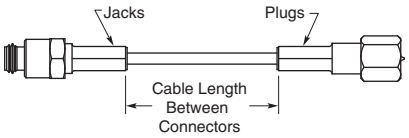

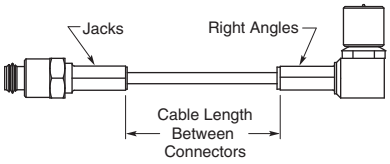

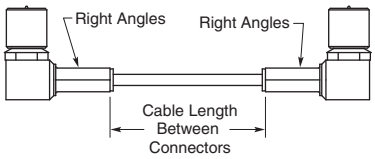

3. Specify length tolerance
   A. Standard tolerance

Assembly Length	Tolerance
0 thru 12-1/2"	±1/8"
Over 12-1/2" thru 1000"	±1% rounded to nearest 1/4"
Over 1000"	±1% rounded to nearest 1"

   B. Special tolerance
   Tolerances as close as ±.5% are available for most cable assemblies at a premium rate. Consult TE Connectivity for details.
4. Specify cable strip (Applies to cable assemblies with only one connector)
   A. Not stripped
   B. Standard strip

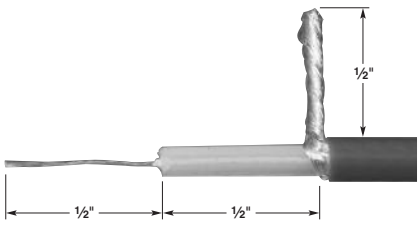

Standard Strip

   C. Special strip - specify style

Example:

Connector:
142-1000-0001 one end
142-1002-0001 other end

Length:
36" overall, standard tolerance

Catalog 1308940
Revised 9-14

www.te.com

Dimensions are shown for reference purposes only. Specifications subject to change.

Dimensions are in millimeters unless otherwise specified.

USA: +1 800 522 6752
Asia Pacific: +86 0 400 820 6015
UK: +44 800 267 666

For additional support numbers please visit www.te.com

MICRODOT Cable Assemblies (Continued)

Mating Interface Chart

Plugs			Jacks and Receptacles		
Series	**Description**	**Page**	**Series**	**Description**	**Page**
S50	Standard	2-105, 2-106	S50	Standard	2-107, 2-108
50 Ohm	Gold Plated Crimp Style	2-124, 2-125	50 Ohm	Gold Plated Crimp Style	2-126, 2-127
50 Ohm	Cap	2-120	50 Ohm	Feed Thru Adapter	2-121, 2-122
S70	Standard	2-105, 2-106	S70	Standard	2-107, 2-108
70 Ohm	Gold Plated Crimp Style	2-124, 2-125	70 Ohm	Gold Plated Crimp Style	2-126, 2-127
70 Ohm	Cap	2-120	70 Ohm	Feed Thru Adapter	2-121, 2-122
S93	Standard	2-105, 2-106	S93	Standard	2-107, 2-109
93 Ohm	Gold Plated Crimp Style	2-125	93 Ohm	Gold Plated Crimp Style	2-126, 2-127
93 Ohm	Cap	2-120	93 Ohm	Feed Thru Adapter	2-121, 2-122
SOS 50	Standard	2-110, 2-111	SOS 50	Standard	2-110, 2-113
SOS 70	Standard	2-111, 2-112	SOS 70	Standard	2-112, 2-113
SOS 93	Standard	2-111, 2-112	SOS 93	Standard	2-112, 2-113
QC 50	Standard	2-114, 2-115	QC 50	Standard	2-114
QC 70	Standard	2-115	QC 70	Standard	2-114
QC 93	Standard	2-115	QC 93	Standard	2-114
Screw-On	Twinax	2-117	Screw-On	Twinax	2-117
Slide-On	Twinax	2-117	Slide-On	Twinax	2-117
Screw-On	Triax	2-118	Screw-On	Triax	2-118
Screw-On	LEPRA/CON Connector	2-129	Screw-On	LEPRA/CON Connector	2-129, 2-130
Screw-On	LEPRA/CON Connector Interlocking Interface	2-131	Screw-On	LEPRA/CON Connector Interlocking Interface	2-132
Slide-On	LEPRA/CON Connector	2-133	Slide-On	LEPRA/CON Connector	2-133, 201

Catalog 1308940
Revised 9-14

www.te.com

Dimensions are shown for reference purposes only. Specifications subject to change.

Dimensions are in millimeters unless otherwise specified.

USA: +1 800 522 6752
Asia Pacific: +86 0 400 820 6015
UK: +44 800 267 666

For additional support numbers please visit www.te.com

MICRODOT Cable Acceptance Dimensions

Standard Connectors

Screw-On Series

Straight Plugs — Page 2-105

Connector Part No.	Max. Jacket	Max. Shield	Max. Dielectric	Max. Inner Conductor
S-50				
032-0021-0001	**.087** 2.21	**.061** 1.55	**.050** 1.27	**.013** .330
032-0023-0001	**.087** 2.21	**.061** 1.55	**.041** 1.04	**.015** .381
032-0025-0001	**.093** 2.36	**.068** 1.73	**.050** 1.27	**.013** .330
032-0033-0001	**.093** 2.36	**.077** 1.96	**.047** 1.00	**.015** .381
032-0097-0001	**.087** 2.21	**.061** 1.55	**.050** 1.27	**.015** .381
032-0098-0001	**.087** 2.21	**.061** 1.55	**.041** 1.04	**.015** .381
032-0155-0001	**.088** 2.24	**.061** 1.55	**.041** 1.04	**.015** .381
032-0156-0001	**.088** 2.24	**.061** 1.55	**.041** 1.04	**.015** .381
052-0213-0001	**.087** 2.21	**.061** 1.55	**.050** 1.27	**.013** .330
052-0235-0001	**.087** 2.21	**.061** 1.55	**.041** 1.04	**.015** .381
052-0235-0003	**.087** 2.21	**.061** 1.55	**.041** 1.04	**.015** .381
052-0370-0001	**.093** 2.36	**.068** 1.73	**.041** 1.04	**.015** .381
052-0542-0001	**.087** 2.21	**.061** 1.55	**.041** 1.04	**.015** .381
S-70				
032-0010-0001	**.093** 2.36	**.075** 1.91	**.061** 1.55	**.013** .330
032-0022-0001	**.093** 2.36	**.075** 1.91	**.059** 1.50	**.015** .381
032-0067-0001	**.108** 2.74	**.079** 2.01	**.059** 1.50	**.015** .381
032-0078-0001	**.108** 2.74	**.079** 2.01	**.061** 1.55	**.013** .330
032-0222-0001	**.093** 2.36	**.075** 1.91	**.059** 1.50	**.015** .381
052-0092-0001	**.093** 2.36	**.075** 1.91	**.059** 1.50	**.015** .381
S-93				
032-0011-0001	**.134** 3.40	**.118** 2.99	**.100** 2.54	**.013** .330
032-0017-0001	**.134** 3.40	**.118** 2.99	**.100** 2.54	**.015** .381
032-0066-0001	**.154** 3.91	**.118** 2.99	**.101** 2.67	**.015** .381
032-0071-0001	**.134** 3.40	**.118** 2.99	**.097** 2.446	**.031** .787
032-0092-0001	**.155** 3.94	**.125** 3.18	**.107** 2.72	**.015** .381
032-0099-0001	**.134** 3.40	**.118** 2.99	**.100** 2.54	**.015** .381
052-0200-0001	**.134** 3.40	**.118** 2.99	**.100** 2.54	**.015** .381

Catalog 1308940
Revised 9-14

www.te.com

Dimensions are shown for reference purposes only. Specifications subject to change.

Dimensions are in millimeters unless otherwise specified.

USA: +1 800 522 6752
Asia Pacific: +86 0 400 820 6015
UK: +44 800 267 666

For additional support numbers please visit www.te.com

MICRODOT Cable Acceptance Dimensions (Continued)

Screw-On Series (Continued)

Right-Angle Plugs — Page 2-106

Connector Part No.	Max. Jacket	Max. Shield	Max. Dielectric	Nom. Inner Conductor
S-50				
032-0015-0001	**.092** 2.34	**.060** 1.52	Any	**.012** .305
052-0204-0001	**.092** 2.34	**.060** 1.52	Any	**.012** .305
052-0215-0001	**.092** 2.34	**.060** 1.52	Any	**.012** .305
052-0337-0001	**.111** 2.81	**.074** 1.88	Any	**.012** .305
S-70				
032-0013-0001	**.111** 2.81	**.074** 1.88	Any	**.012** .305
052-0299-0001	**.111** 2.81	**.074** 1.88	Any	**.012** .305
052-0379-0001	**.111** 2.81	**.074** 1.88	Any	**.012** .305
S-93				
032-0014-0001	**.134** 3.40	**.123** 3.12	Any	**.012** .305
032-0068-0001	**.155** 3.94	**.118** 2.99	Any	**.012** .305
032-0153-0001	**.155** 3.94	**.118** 2.99	Any	**.012** .305
052-0207-0001	**.134** 3.40	**.123** 3.12	Any	**.012** .305
052-0298-0001	**.134** 3.40	**.123** 3.12	Any	**.012** .305
052-0304-0022	**.155** 3.94	**.118** 2.99	Any	**.012** .305

Jacks — Page 2-107

Connector Part No.	Max. Jacket	Max. Shield	Max. Dielectric	Max. Inner Conductor
S-50				
031-0033-0001	**.088** 2.24	**.061** 1.55	**.041** 1.04	**.021** .533
031-0034-0001	**.087** 2.21	**.061** 1.55	**.041** 1.04	**.021** .533
051-0467-0001	**.079** 2.01	**.061** 1.55	**.041** 1.04	**.021** .533
S-70				
031-0036-0001	**.093** 2.36	**.075** 1.91	**.059** 1.50	**.021** .533
031-0048-0001	**.093** 2.36	**.075** 1.91	**.059** 1.50	**.021** .533
031-0090-0001	**.109** 2.77	**.079** 2.01	**.059** 1.50	**.021** .533
S-93				
031-0032-0001	**.134** 3.40	**.118** 2.99	**.100** 2.54	**.021** .533
031-0037-0001	**.134** 3.40	**.118** 2.99	**.100** 2.54	**.021** .533
031-0088-0001	**.154** 3.91	**.118** 2.99	**.101** 2.57	**.021** .533
031-0089-0001	**.154** 3.91	**.118** 2.99	**.101** 2.57	**.021** .533

Dimensions are shown for reference purposes only. Specifications subject to change.

Dimensions are in millimeters unless otherwise specified.

USA: +1 800 522 6752
Asia Pacific: +86 0 400 820 6015
UK: +44 800 267 666

For additional support numbers please visit www.te.com

MICRODOT Cable Acceptance Dimensions (Continued)

Slide-On Series

Straight Plugs — Page 2-111

Connector Part No.	Max. Jacket	Max. Shield	Max. Dielectric	Max. Inner Conductor
SOS-50				
032-0055-0001	**.088** 2.24	**.058** 1.47	**.041** 1.04	**.015** .381
032-0056-0001	**.088** 2.24	**.058** 1.47	**.041** 1.04	**.015** .381
SOS-70				
032-0060-0001	**.093** 2.36	**.075** 1.71	**.059** 1.50	**.015** .381
032-0061-0001	**.093** 2.36	**.075** 1.71	**.059** 1.50	**.015** .381
032-0087-0001	**.108** 2.74	**.079** 2.01	**.059** 1.50	**.015** .381
SOS-93				
032-0058-0001	**.134** 3.40	**.118** 2.99	**.100** 2.54	**.015** .381
032-0077-0001	**.134** 3.40	**.118** 2.99	**.100** 2.54	**.015** .381
032-0084-0001	**.154** 3.91	**.118** 2.99	**.101** 2.57	**.015** .381

Right-Angle Plugs — Page 2-112

Connector Part No.	Max. Jacket	Max. Shield	Max. Dielectric	Nom. Inner Conductor
SOS-50				
032-0063-0001	**.092** 2.34	**.060** 1.52	Any	**.012** .305
SOS-70				
032-0062-0001	**.111** 2.82	**.074** 1.88	Any	**.012** .305
SOS-93				
032-0059-0001	**.134** 3.40	**.123** 3.12	Any	**.012** .305
032-0083-0001	**.155** 3.94	**.118** 2.99	Any	**.012** .305

Jacks — Page 2-112

Connector Part No.	Max. Jacket	Max. Shield	Max. Dielectric	Max. Inner Conductor
SOS-50				
031-0053-0001	**.088** 2.24	**.061** 1.55	**.041** 1.04	**.021** .533
031-0054-0001	**.088** 2.24	**.061** 1.55	**.041** 1.04	**.021** .533
SOS-70				
031-0095-0001	**.108** 2.74	**.079** 2.01	**.059** 1.50	**.021** .533
SOS-93				
031-0063-0001	**.134** 3.40	**.118** 2.99	**.100** 2.54	**.021** .533
031-0064-0001	**.134** 3.40	**.118** 2.99	**.100** 2.54	**.021** .533
031-0093-0001	**.154** 3.91	**.118** 2.99	**.101** 2.57	**.021** .533
031-0094-0001	**.154** 3.91	**.118** 2.99	**.101** 2.57	**.021** .533

Dimensions are shown for reference purposes only. Specifications subject to change.

Dimensions are in millimeters unless otherwise specified.

USA: +1 800 522 6752
Asia Pacific: +86 0 400 820 6015
UK: +44 800 267 666

For additional support numbers please visit www.te.com

MICRODOT Cable Acceptance Dimensions (Continued)

Quick-Connect Series

Straight Plugs — Page 2-115

Connector Part No.	Max. Jacket	Max. Shield	Max. Dielectric	Max. Inner Conductor
QC-50				
032-0002-0001	**.093** 2.36	**.058** 1.47	Any	**.013** .330
032-0030-0001	**.093** 2.36	**.058** 1.47	**.041** 1.04	**.015** .381
QC-70				
032-0016-0001	**.093** 2.36	**.075** 1.91	**.061** 1.55	**.013** .330
032-0031-0001	**.093** 2.36	**.075** 1.71	**.059** 1.50	**.015** .381
032-0079-0001	**.108** 2.74	**.079** 2.01	**.059** 1.50	**.015** .381
QC-93				
032-0012-0001	**.134** 3.40	**.118** 2.99	**.100** 2.54	**.013** .330
032-0032-0001	**.134** 3.40	**.118** 2.99	**.100** 2.54	**.015** .381
032-0072-0001	**.154** 3.91	**.118** 2.99	**.101** 2.57	**.015** .381

Right-Angle Plugs — Page 2-115

Connector Part No.	Max. Jacket	Max. Shield	Max. Dielectric	Nom. Inner Conductor
QC-50				
032-0026-0001	**.092** 2.34	**.060** 1.52	Any	**.012** .305
QC-70				
032-0027-0001	**.111** 2.82	**.074** 1.88	Any	**.012** .305
QC-93				
032-0020-0001	**.134** 5.40	**.123** 3.12	Any	**.012** .305
052-0228-0001	**.155** 3.94	**.118** 2.99	Any	**.012** .305

Jacks — Page 2-116

Connector Part No.	Max. Jacket	Max. Shield	Max. Dielectric	Max. Inner Conductor
QC-50				
031-0038-0001	**.093** 2.36	**.061** 1.55	**.041** 1.04	**.021** .533
QC-93				
031-0040-0001	**.134** 3.40	**.118** 2.99	**.100** 2.54	**.021** .533

Twinax

Plugs — Page 2-117

Connector Part No.	Max. Jacket	Max. Shield	Max. Dielectric	Max. Inner Conductor
032-0088-0001	**.167** 4.24	**.142** 3.60	**.061** 1.55	**.014** .356
032-0093-0001	**.123** 3.12	**.092** 2.34	**.042** 1.07	**.014** .356
052-0229-0001	**.123** 3.12	**.092** 2.34	**.042** 1.07	**.014** .356
052-0324-0001	**.167** 4.24	**.142** 3.61	**.061** 1.55	**.014** .356

Jacks — Page 2-117

Connector Part No.	Max. Jacket	Max. Shield	Max. Dielectric	Max. Inner Conductor
051-0358-0001	**.167** 4.24	**.142** 3.60	**.061** 1.55	**.020** .508
051-0389-0001	**.167** 4.24	**.142** 3.61	**.061** 1.55	**.020** .508

Dimensions are shown for reference purposes only. Specifications subject to change.

Dimensions are in millimeters unless otherwise specified.

USA: +1 800 522 6752
Asia Pacific: +86 0 400 820 6015
UK: +44 800 267 666

For additional support numbers please visit www.te.com

MICRODOT Cable Acceptance Dimensions (Continued)

Triax

Plugs — Page 2-118

Connector Part No.	Max. Jacket	Max. Outer Shield	Max. Outer Dielectric	Max. Inner Shield	Max. Inner Dielectric	Max. Inner Conductor
052-0130-0001	**.124** 3.15	Single Shield	**.085** 2.26	Single Shield	**.041** 1.04	**.014** .356
052-0138-0001	**.183** 4.65	Single Shield	**.146** 3.71	**.118** 2.99	**.107** 2.72	**.014** .356
052-0593-0001	**.214** 5.44	Single Shield	**.166** 4.22	**.161** 4.09	**.131** 3.33	**.020** .508

Gold Plated Crimp Style Coaxial Connectors

Straight Plugs — Pages 2-124, 2-125

Connector Part No.	Max. Jacket	Max. Dielectric	Nom. Inner Conductor
50 Ohm Series			
132-0112-000*	**.088** 2.24	**.039** .991	**.012** .305
132-0113-000*	**.088** 2.24	**.039** .991	**.012** .305
132-0114-000*	**.110** 2.79	**.070** 1.78	**.012** .305
132-0115-000*	**.110** 2.79	**.070** 1.78	**.012** .305
132-0509-0002	**.116** 2.95	**.070** 1.78	**.012** .305
70 Ohm Series			
132-0200-000*	**.110** 2.79	**.070** 1.78	**.012** .305
132-0201-000*	**.110** 2.79	**.070** 1.78	**.012** .305
93 Ohm Series			
132-0300-000*	**.155** 3.94	**.107** 2.72	**.012** .305
132-0301-000*	**.155** 3.94	**.107** 2.72	**.012** .305

Right-Angle Plugs — Page 2-125

Connector Part No.	Max. Jacket	Max. Dielectric	Nom. Inner Conductor
50 Ohm Series			
132-0116-0002	**.088** 2.24	**.039** .991	**.012** .305
132-0117-0002	**.088** 2.24	**.039** .991	**.012** .305
132-0118-0002	**.110** 2.79	**.074** 1.88	**.012** .305
132-0119-0002	**.110** 2.79	**.074** 1.88	**.012** .305
70 Ohm Series			
132-0202-0002	**.110** 2.79	**.074** 1.88	**.012** .305
132-0203-0002	**.110** 2.79	**.074** 1.88	**.012** .305
93 Ohm Series			
132-0302-0002	**.155** 3.94	**.107** 2.72	**.012** .305
132-0303-0002	**.155** 3.94	**.107** 2.72	**.012** .305

Dimensions are shown for reference purposes only. Specifications subject to change.

Dimensions are in millimeters unless otherwise specified.

USA: +1 800 522 6752
Asia Pacific: +86 0 400 820 6015
UK: +44 800 267 666

For additional support numbers please visit www.te.com

MICRODOT Cable Acceptance Dimensions (Continued)

Gold Plated Crimp Style Coaxial Connectors (Continued)

Jacks — Page 2-126

Connector Part No.	Max. Jacket	Max. Dielectric	Nom. Inner Conductor
50 Ohm Series			
131-0134-0001	**.088** 2.24	**.039** .991	**.012** .305
131-0135-0001	**.088** 2.24	**.039** .991	**.012** .305
131-0136-0001	**.110** 2.79	**.070** 1.78	**.012** .305
131-0137-0001	**.110** 2.79	**.070** 1.78	**.012** .305
70 Ohm Series			
131-0200-0001	**.110** 2.79	**.070** 1.78	**.012** .305
131-0201-0001	**.110** 2.79	**.070** 1.78	**.012** .305
93 Ohm Series			
131-0300-0001	**.155** 3.94	**.107** 2.72	**.012** .305
131-0301-0001	**.155** 3.94	**.107** 2.72	**.012** .305

LEPRA/CON Connectors

All — Pages 2-129 to 2-137

Connector Part No.	Max. Jacket	Max. Dielectric	Nom. Inner Conductor
All	**.081** 2.06	**.040** 1.02	**.012** .305

Dimensions are shown for reference purposes only. Specifications subject to change.

Dimensions are in millimeters unless otherwise specified.

USA: +1 800 522 6752
Asia Pacific: +86 0 400 820 6015
UK: +44 800 267 666

For additional support numbers please visit www.te.com

MICRODOT Hermetic Connectors

Coaxial Screw-On, Slide-On Series

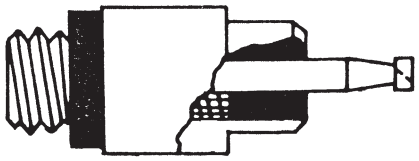

Material and Finish

50 Connector uses 10-32 thread.

70 Connector uses 12-32 thread.

93 Connector uses 1/4-32 thread.

Housing (1) — Cold rolled steel silver plate.

Gasket (2) — Neoprene or silicone rubber.

Insulator (3) — PTFE.

Glass Seal (4)

Center Contact (5) — Nickel Iron alloy contact with slotted turret type solder pot (other terminations available).

Service and Performance Data

Temperature Range — -65°F to 450°F [–54°C to 232°C] .

Electrical — 750 VAC working voltage.

Performance — 1200 VAC test at sea level.

Insulation Resistance — 5000 megohms at 500 VDC (room temperature).

Shock — 100 G's minimum.

Pressure — 100 PSI minimum.

Leak Rate Per Seal — Less than 1.04 x 10^{-8} cc/sec. (.001 Micron cubic ft/hr) of 100% helium tested at one atmosphere pressure differential far exceeding requirements of MIL-C-26500 and MIL-C-26482.

Plating — Silver unless otherwise specified.

Bulkhead Solder Mount

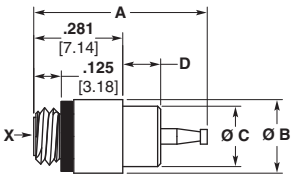

Fig. 1

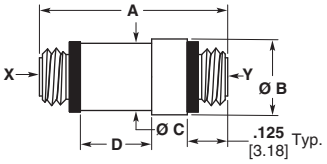

Fig. 2

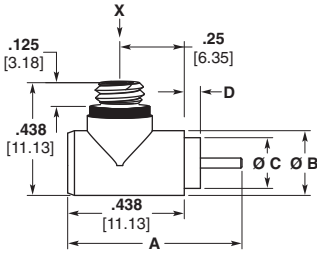

Fig. 3

Part No.	Fig.	A	B Dia.	C Dia. ±.015	D	X*	Y*
051-0049-0001	1	**.563** 14.30	**.25** 6.35	**.200** 5.08	**.125** 3.18	S-50	—
051-0056-0001	1	**.563** 14.30	**.313** 7.95	**.251** 6.38	**.125** 3.18	S-93	—
053-0228-0001	2	**.594** 15.09	**.25** 6.35	**.227** 5.77	**.234** 5.94	S-50	S-50
051-0315-0001	3	**.656** 16.66	**.25** 6.35	**.195** 4.95	**.063** 1.60	S-50	—

* "S" indicates Screw-On Series
Dimensions are subject to change without notice.

Bulkhead Solder Mount, Panel Insulated

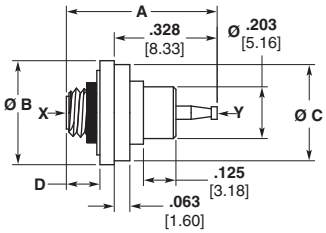

Fig. 1

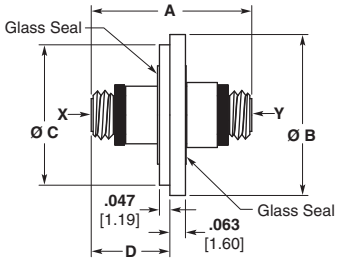

Fig. 2

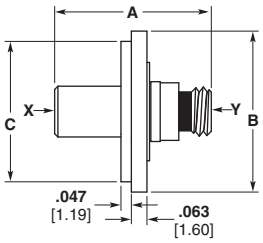

Fig. 3

Part No.	Fig.	A	B Dia.	C Dia.	D	X*	Y*
051-0232-0001	1	**.563** 14.30	**.406** 10.31	**.370** 9.40	**.172** 4.37	S-50	
053-0227-0001	2	**.609** 15.47	**.625** 15.88	**.540** 13.72	**.297** 7.54	S-50	S-50
053-0412-0001	2	**.609** 15.47	**.625** 15.88	**.540** 13.72	**.297** 7.54	S-93	S-93
053-0028-0001	3	**.609** 15.47	**.625** 15.88	**.540** 13.72	**.297** 7.54	SOS-50	S-50

* "S" indicates Screw-On Series; "SOS" indicates Slide-On Series
Dimensions are subject to change without notice.

Dimensions are shown for reference purposes only. Specifications subject to change.

Dimensions are in millimeters unless otherwise specified.

USA: +1 800 522 6752
Asia Pacific: +86 0 400 820 6015
UK: +44 800 267 666

For additional support numbers please visit www.te.com

MICRODOT Hermetic Connectors (Continued)

Coaxial Screw-On, Slide-On Series
(Continued)

Microminiature Coaxial Receptacles

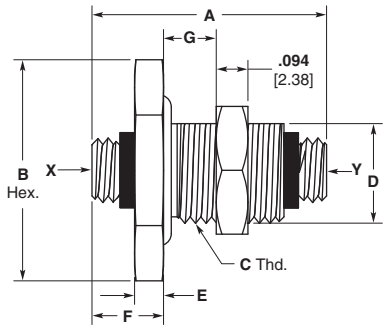

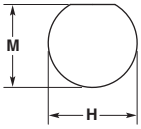

Mounting Hole

Part No.	A	B Hex.	C Thd.	D	E	F	G	H	M	X*	Y*
053-0455-0001	**.688** 17.46	**.563** 14.29	5/16-32 UNEF-2A	**.297** 7.54	**.094** 2.38	**.203** 5.16	**.25** 6.35	**.312** 7.92	**.291** 7.39	S-50	S-50
053-0636-0001	**.922** 23.42	**.625** 15.88	3/8-32 UNEF-2A	**.344** 8.73	**.078** 1.98	**.203** 5.16	**.438** 11.11	**.375** 9.53	**.347** 8.81	S-93	S-93

* "S" indicates Screw-On Series
Dimensions are subject to change without notice.

Solder Mount Slide-On Series Receptacles

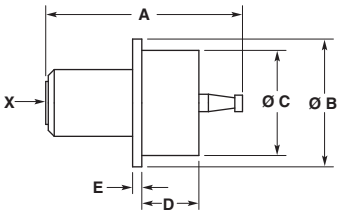

Part No.	A	B Dia.	C Dia. ±.015	D	E	X*
051-0134-0001	**.563** 14.29	**.375** 9.53	**.309** 7.85	**.172** 4.37	**.031** .794	SOS-50, 70, 93
051-0158-0001	**.563** 14.29	**.25** 6.35	**.200** 5.08	**.125** 3.18	**.047** 1.19	SOS-50, 70, 93

* "SOS" indicates Slide-On Series
Dimensions are subject to change without notice.

Single Hole Mount Receptacles

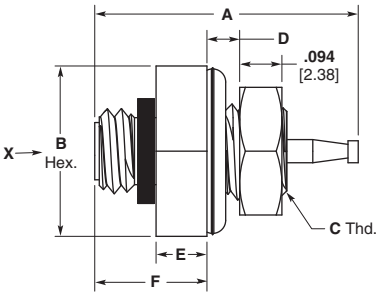

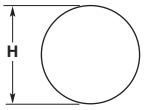

Mounting Hole

Part No.	A	B Hex.	C Thd.	D	E	F	H	X*
051-0249-0001	**.563** 14.29	**.375** 9.53	12-32 UNEF-2A	**.078** 1.98	**.109** 2.78	**.234** 5.95	**.218** 5.54	S-50
051-0154-0001	**.656** 16.67	**.625** 15.88	3/8-32 UNEF-2A	**.156** 3.97	**.078** 1.98	**.203** 5.16	**.375** 9.53	S-93

* "S" indicates Screw-On Series
Dimensions are subject to change without notice.

Appendix A - Theory and Application

Theory and Application

As a leading manufacturer of RF products, TE Connectivity produces a large variety of coaxial connectors. The proper selection and application of these connectors requires a knowledge of factors not involved in other types of connectors and terminals. The following paragraphs have been prepared to improve understanding of the theory behind RF connectors:

Basic RF Theory[1]

RF energy travels by electromagnetic waves, and it is primarily the frequency of these waves that we are interested in. Briefly, if an oscillating voltage source is connected to a cable, a continuous electromagnetic wave will propagate along the cable. A sensor placed at some point on the cable would indicate a varying voltage (E field) as well as a current and magnetic field (H field) as the wave travels past it. This is called an electromagnetic wave because both electric and magnetic fields are varying. The wave shape is initially determined by the variation of the source with time.

Figure 7 shows the radiant energy spectrum. Visible light, radio, television, x-rays and Gamma rays are all phenomenon of electromagnetic waves at different frequencies. This introduction will treat only those that are generated by an electrical source and propagated along a physical cable or other transmission media. That is, frequencies above zero and up to about 50 gigahertz.

[1]The majority of the technical terms, relative to RF and coaxial cable and connectors, used here-in and throughout this catalog are defined in the Glossary of Terms in Section 11.

Frequency or Wavelengths	Designation	Applications
0 - 29.9 KHz	VLF (Very Low Frequency)	Commercial AC electricity, deep depth sounders, ultrasonic grinders, sonic oscillators
30 - 299.9 KHz	LF (Low sonar Frequency)	Shallow-to-medium depth sounders
300 - 2999.9 KHz	MF (Medium Frequency)	Commercial AM radio broadcasting, marine radio telephone, direction finders
3 - 29.9 MHz	HF (High Frequency)	Citizen band radio, amateur radio, international broadcasting
30 - 299.9 MHz	VHF (Very High Frequency)	VHF television (Channels 2 thru 13), commercial FM radio broadcasting, amateur radio, fire and police radio
300 - 2999.9 MHz	UHF (Ultra-high Frequency)	UHF television (Channels 14 thru 83), microwave ovens, aeronautical radionavigation
3 - 29.9 GHz	SHF (Super High Frequency)	Microwave communications, marine radar, aircraft tracking and airborne radars
30 - 299.9 GHz	EHF (Extremely High Frequency)	Space communications, radio astronomy

Notes:
1. KHz = Kilohertz (1 thousand cycles per second)
2. MHz = Megahertz (1 million cycles per second)
3. GHz = Gigahertz (1 billion cycles per second)

Figure 7

Radiant Energy Spectrum

In the following paragraphs we will discuss waves in greater detail, including the relationship of frequency and wave length, how pulses are formed and used, how each differs from the other and the problems involved in their transmission.

Sine Waves

An RF wave is a sine wave, meaning that it smoothly swings from zero to a positive peak value, then back down past zero to a negative peak value, then back to zero to complete a 360 electrical degree cycle. The positive and negative peaks are always equal in amplitude. The two qualities which characterize this type of wave are amplitude and frequency (f). Figure 8 shows these two characteristics. Amplitude refers to the peak value attained by the wave and corresponds to voltage. Frequency refers to the number of oscillations per second. For example, the sign wave in Figure 8(B) has completed 12 cycles in one second. Therefore, we would say that this wave has a frequency of 12 cycles per second or 12 Hertz. The time for one complete cycle is defined as the period (T). The relationship between the period and frequency is given by the equation:

$$f = 1 / T \text{ in Hertz}$$

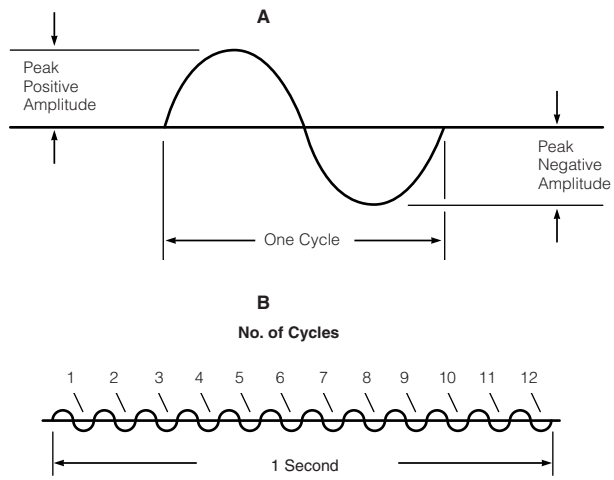

Figure 8

Typical Sine Wave Characteristics

The wave travels away from the generator at speeds approaching the speed of light. When an electromagnetic wave travels in a medium other than air or vacuum, the **speed** for the wave is reduced by a factor of the square root of the dielectric constant (ε. The velocity (v) of the propagation of a signal is given by:

$$v = \frac{c}{\sqrt{\varepsilon}}$$

Where c is the speed of light, 3×10^8 m/sec or 1.18×10^{10} in/sec, and ε is the dielectric constant of the medium. (See Table 1 for dielectric constants of various materials)

The **wavelength** of a signal is given by the formula

$$\lambda = v/f = \frac{c}{\sqrt{\varepsilon} \times f\,(\text{GHz})} \quad \frac{1.18 \times 10^{10}}{\sqrt{\varepsilon} \times f\,(\text{GHz})} \text{ inches}$$

See Figure 9

Appendix A - Theory and Application (Continued)

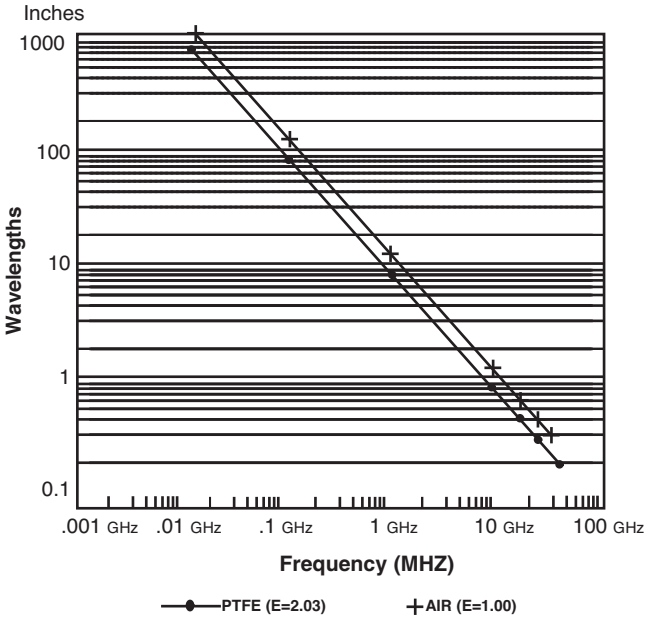

Figure 9

Table 1.

Properties of Insulating Materials

Dielectric Material	Dielectric Constant	Operating Temperature Range
TFE	2.03	-70 +250°C
Polyethylene	2.3	-60 +80°C
Nylon	4.6-4.0	-40 +120°C
TPX	2.12	-65 +85°C
Polypropylene	2.25	-40 +105°C
Acetal	3.7	-65 +85°C

Pulses

The sine wave is most often used for communication purposes where intelligence is imposed on the wave by a variation in amplitude (amplitude modulation, AM) or by a variation in frequency (frequency modulation, FM).

Pulses, on the other hand, are primarily used in computers and digital instrumentation. Since pulses are generally used for triggering purposes, the pulse rise/fall time, amplitude and width are the most important. Figure 10 shows a pulse and identifies these characteristics.

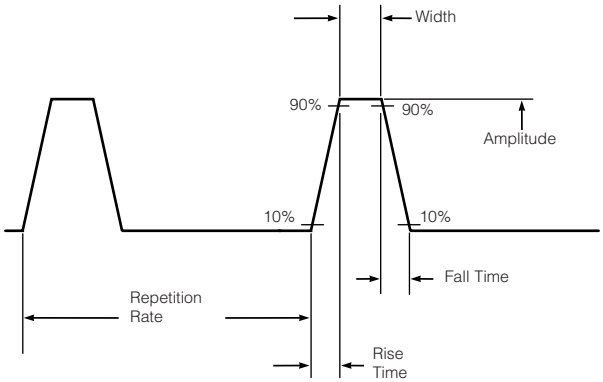

Figure 10

Pulse Characteristics

Notice that rise time is the time required for the pulse to rise from 10% to 90% of its amplitude — not from zero to maximum. Rise and fall time is perhaps the single most important characteristic of a pulse in today's high-speed digital equipment. Figure 11 shows that the faster the rise and fall time, the more pulses will fit in a given time frame.

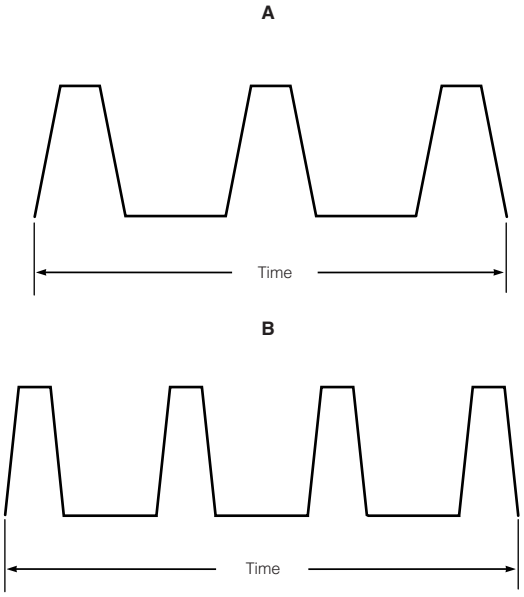

Figure 11

Pulse Rise and Fall Time

The bit rate for a system is the maximum rate of pulses per second that a system can process without causing data errors. The maximum performance can also be specified in terms of baud rate. The baud rate is defined as the number of characters (bytes) that are transmitted per second. Generally a character represents 10 bits (7 bits for the information, one parity bit, and two for start and stop, totalling 10).

Now that we know why fast pulses are required, the next problem is how to obtain faster rise times. A pulse is made up of a great number of different frequencies, and the more high frequencies a pulse contains, the faster will be its rise time and the flatter will be its peak. To better understand this, refer to Figure 12. At A, you will see a fundamental frequency (1), its third harmonic (3), and the resultant waveform (S3), which is a combination of 1 and 3. Although this does not yet resemble a square wave, you will note that the rise time is decreased, and a dip appears at the peak. At B of Figure 12, we have added the fifth harmonic. Rise time is further decreased, and the peak is beginning to flatten out. At C the seventh harmonic has been included, and the resultant wave S7 begins to resemble a square wave. As more high frequency harmonics are added to the waveform, it will more closely resemble a square wave, and the squarer it becomes, the faster will be the rise time.

Catalog 1308940
Revised 9-14

www.te.com

Dimensions are shown for reference purposes only. Specifications subject to change.

Dimensions are in millimeters unless otherwise specified.

USA: +1 800 522 6752
Asia Pacific: +86 0 400 820 6015
UK: +44 800 267 666

For additional support numbers please visit www.te.com

Appendix A - Theory and Application (Continued)

Fast rise times and short pulse widths require high frequency components.

Two frequent causes of digital signal degradation can be (1) high capacitance of the transmission line and (2) impedance mismatches of connector transmission line or I/0 devices. Selection of an impedance-matched connector on a digital line, especially if short cable assemblies are used, can be as important as connector selection for an RF modulated line. Reflected pulses out of phase with the original pulse can cause false signals or high error rates in a digital system.

Since pulses with fast rise times are necessary in high-speed computers, any circuit element which could reduce or attenuate high frequency response is undesirable.

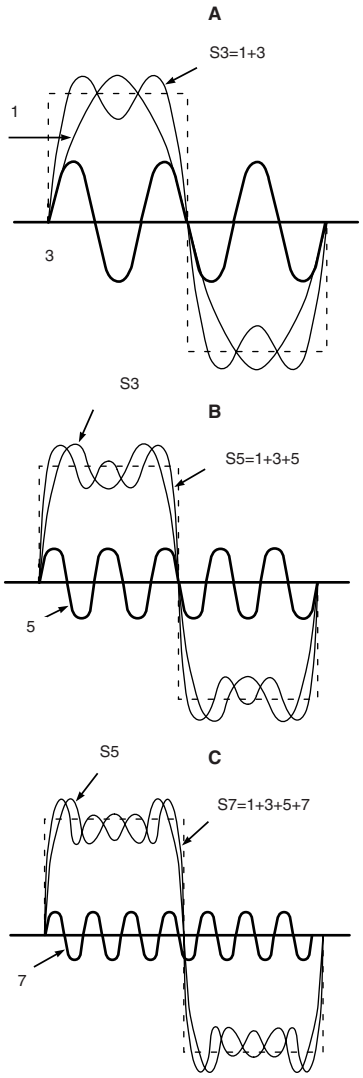

Figure 12

Development of a Square Wave

Signal Integrity and Propagation

To explain how to maintain signal integrity, it is necessary to review how the signal is configured in a cable and how it propagates. Ignoring digital signals for this discussion we will identify the issues that deal with the integrity of a sine wave. Consider a coaxial cable consisting of an inner conductor surrounded by a dielectric material and then an outer conductor (See Figure 13). The outer conductor may be a braid, a foil, or a solid metal.

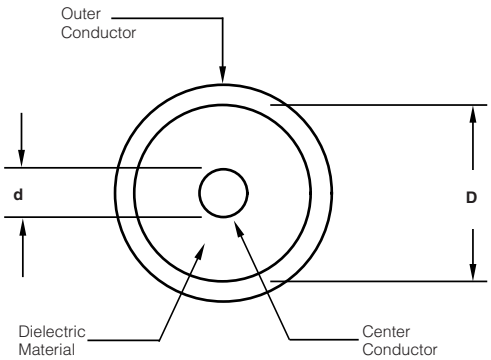

Figure 13

Diagram of a Cable

An electromagnetic wave traveling in a coaxial cable produces an electric and a magnetic field between the inner conductor and the outer conductor (Figure 14). The electric (E field) is radial and varies in time. An alternating current flows along the inner conductor and the outer conductor. An oscillating magnetic field (H field) circles the inner conductor.

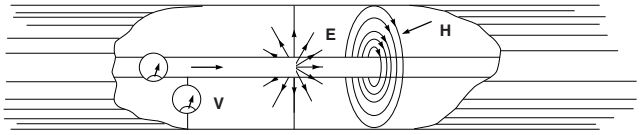

Figure 14

Electric field (E) and magnetic field (H) belonging to the principal mode in a coaxial line.

The alternating current on a conductor is not spread throughout the conductor but is strongest at the surface and decays exponentially at points further into the conductor. This is called the skin effect. At a frequency of 1MHz, three skin depths is 0.0078” (95% of the current is within three skin depths of the surface) and at 10GHz three skin depths is 0.00078”. As a result, the current is on the outer surface of the inner conductor and the inner surface of the outer conductor over the entire range of interest for most RF systems. The dimensions and material beyond several skin depths have no effect on the wave; gold plated plastic will propagate as well as gold plated copper at sufficiently high frequencies.

Dimensions are shown for reference purposes only. Specifications subject to change.

Dimensions are in millimeters unless otherwise specified.

USA: +1 800 522 6752
Asia Pacific: +86 0 400 820 6015
UK: +44 800 267 666

For additional support numbers please visit www.te.com

Appendix A - Theory and Application (Continued)

Attenuation

A wave loses energy (attenuates) in several ways: (1) The resistance of the inner and outer conductors is small but can be significant over long lengths and will produce some heat. (2) The dielectric may be lossy; its resistance is high but not infinite, and some energy is lost. (3) Electromagnetic energy radiates at high frequencies; significant energy losses are caused by radiation of electromagnetic energy (the cable acts like an antenna). (4) Energy is reflected due to impedance mismatches. The combination of these four types of losses are referred to as the **insertion loss** of a transmission line system. Connectors have similar losses.

Characteristic Impedance

A parameter which defines the behavior of a cable, connector, or any propagating system is **Characteristic Impedance**, Zo. The characteristic impedance of a lossless cable is related to the inductance per unit length, L, and the capacitance per unit length, C, as follows:

$$Zo = \sqrt{L/C} \text{ in ohms}$$

The equivalent circuit of a transmission line is shown in Figure 15. R represents the conductor resistance for a unit length.

For a coaxial cable the characteristic impedance is given by:

$$Zo = \frac{138}{\sqrt{\varepsilon}} \times \text{Log}_{10} \frac{D}{d} \text{ in ohms}$$

where D is the inner diameter of the outer conductor and d is the outer diameter of the inner conductor, respectively. Similar equations apply for other geometries such as two parallel wires.

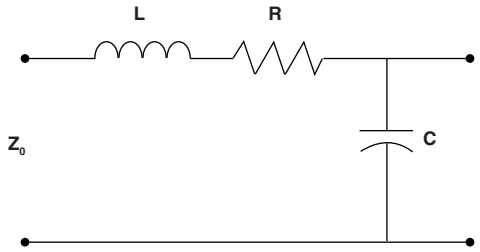

Figure 15

Typical Transmission Line Schematic

The maximum power is transferred between two systems if they have the same impedance. This is called impedance matching. However, impedance variations that are short compared to a wavelength can have a negligible effect on signal loss.

Standard impedances are 50 ohm, 75 ohm and 93-125 ohm. Most systems use 50 ohm because it is a compromise between maximum power transmission and minimum line loss. The telephone industry and the broadcast industry use 75 ohm for minimum line attenuation. The need for low capacitance instrumentation cable has produced the 93-125 ohm systems. The higher impedances are generally achieved by changing the conductor diameters and by modifying the dielectric material to add air.

Reflections

When the characteristic impedance changes in a transmission line system, part of an incident wave is reflected. The reflection coefficient can be calculated as:

$$\text{Reflection Coefficient} = \rho = \frac{V_i}{V_R} = \frac{Z_R - Z_O}{Z_R + Z_O}$$

Where Vi and ZO are the incident voltage and impedance of the first media. V_R and Z_R represent the reflected voltage and impedance of the media that caused the reflection. The decibel loss due to reflection is given by:

$$\text{Return Loss} = 10 \text{ Log}_{10} \left(\frac{1}{1-\rho^2} \right) \text{ dB}$$

VSWR

The traditional way to determine the reflection coefficient is to measure the standing wave caused by the superposition of the incident wave and the reflected wave. Traditionally the voltage is measured at a series of points using a slotted line. The ratio of the maximum divided by the minimum is the Voltage Standing Wave Ratio (VSWR). The VSWR is infinite for total reflections because the minimum voltage is zero. If no reflection occurs the VSWR is 1.0. VSWR and reflection coefficient are related as follows:

$$VSWR = (1 + \rho)/(1 - \rho)$$

Most present instrumentation measures the reflection coefficient and calculates the VSWR.

Figure 16 represents the direct relationship between VSWR and its equivalent in return loss (expressed in dB).

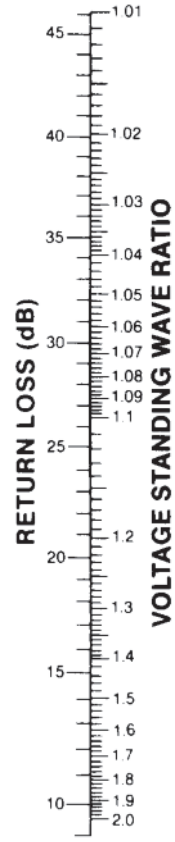

Figure 16

VSWR vs. Return Loss

Multiple Reflections

If there is a series of impedance changes, each one will have a reflection coefficient. The total reflection coefficient is the vector addition of each of the individual coefficients accounting for the distance between reflections and the reflection of any reflected waves. Even though the calculations are difficult, a total VSWR can still be measured.

Multiple reflections can produce a resonance phenomenon that is unique to wave theory. Properly understood some serious difficulties can be avoided. An example will make the point clear. Consider an electromagnetic wave with a wave-

Catalog 1308940
Revised 9-14
www.te.com

Dimensions are shown for reference purposes only. Specifications subject to change.
Dimensions are in millimeters unless otherwise specified.
USA: +1 800 522 6752
Asia Pacific: +86 0 400 820 6015
UK: +44 800 267 666
For additional support numbers please visit www.te.com

length of 4 inches traveling on a cable that changes from 50 ohms to 25 ohms. The reflection coefficient is -.33, which means that one third of the incident voltage is reflected toward the source. Assume that one inch (one quarter wavelength) down the cable the impedance changes back to 50 ohm. Again, one third of the wave is reflected, but without any phase shift. It travels back to the first interface where one third of this reflected wave is reflected back toward the second interface. Two thirds of the wave is transmitted through the interface and travels back to the source. Since the first (reflected) wave is shifted 180 degrees at the reflection, and the second (transmitted-reflected-transmitted) wave is shifted 180 degrees because it traveled the one inch separation twice, the two waves are in phase. The net result is that the VSWR is much larger because the length of the 25 ohm section was just the right length to cause a resonance. If the length of the 25 ohm section had been one half wavelength, the two waves would have interfered and the VSWR would be at a minimum.

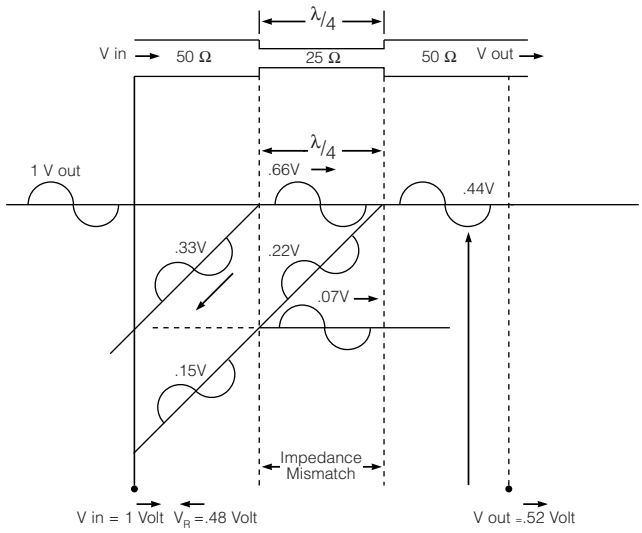

Figure 17

Multiple Wave Reflections
(Caused by Impedance Mismatch)

In summary, avoid cable lengths, printed circuit board paths, or connectors that are multiple of one quarter ($\lambda/4$, $3\lambda/4$, etc.) of the intended signal transmission wavelength. Coaxial cables, when manufactured, also have periodic variations in diameter that result in periodic changes in impedance (Zo), that can cause significant levels of reflected signal (high return loss) at specific frequencies.

Reflections of Digital Signals

The previous discussions dealing with attenuation, reflections and standing waves can apply to digital signals with some extra thought.

A single pulse can be thought of as a combination of high frequency sine waves. The maximum frequency component in a square wave pulse can be calculated by this equation:

$$f = 0.35/\text{rise time}$$

where

f = GHz when “t” is in nanoseconds

Attenuation of the frequencies necessary to support the short risetime will produce a slower rise and possibly prohibit the pulse from ever reaching the detector. This ‘slurring’ of the pulse is similar to the behavior of an RC circuit and the attenuation is sometimes called capacitive attenuation.

A series of pulses can demonstrate resonance. If a portion of a pulse is reflected at each interface, it is possible for them to come together and add up to form a new phantom pulse.

The critical frequency here is the bit rate. Think of a sine wave with a frequency the same as the bit rate; if it will resonate in the cable, the pulses will also. Extra pulses caused by resonance might easily result in an error signal from the receiving system requesting a retransmittal. The final result would be a communication system that is much slower than intended.

Cut-off Frequency

The cut-off frequency of a coaxial transmission line is the frequency at which modes of energy transmission, other than the “TEM” mode, can be generated.

$$fco = \frac{7.5}{\sqrt{\varepsilon}\,(D+d)} \text{ (in GHz)}$$

(D and d are measured in inches)

Types of Transmission Lines

Twin Lead transmission cable is generally used where impedance matching alone is important, since it provides only minimal shielding. Impedance values of 300 ohms and 600 ohms are common. Lower impedance values require closer spacing of the conductors and are not normally available in this type of cable. A typical application for twin lead cable is in antenna lead wire for television sets.

Twisted Pair is a variation of the twin lead type. It consists of two lengths of ordinary hookup wire twisted together. A twisted pair provides relatively constant impedance plus better magnetic shielding than twin lead cables. It is flexible, inexpensive, easy to terminate and is used extensively by the computer industry. However, it should not be used when maximum shielding is required.

Appendix A - Theory and Application (Continued)

Shielded Twisted Pair Cable is used to eliminate inductive and capacitive coupling. Twisting cancels out inductive coupling, while the shield eliminates capacitive coupling. Most applications for this cable are between equipment, racks and buildings.

Flexible (Braided) Coaxial Cable is by far the most common type of closed transmission line because of its flexibility. It is a coaxial cable, meaning that both the signal and the ground conductors are on the same center axis. The outer conductor is made from fine braided wire, hence the name “braided coaxial cable”. This type of cable is used in practically all applications requiring complete shielding of the center conductor. The effectiveness of the shielding depends upon the weave of the braid and the number of braid layers. TE Connectivity manufacturers connectors for cable sizes ranging from less than 1/8 in. diameter, for low power applications of around 50 watts, to over 1/2 in. diameter for power of 850 watts at 100 MHz and voltages up to 5000. In addition to power handling capabilities, cables are available for high frequency applications, high and low temperature applications, severe environmental applications and many other specialized uses.

Triaxial Cable is used when higher “shielding” efficiency characteristics are required in applications similar to those using shielded twisted pair cable.

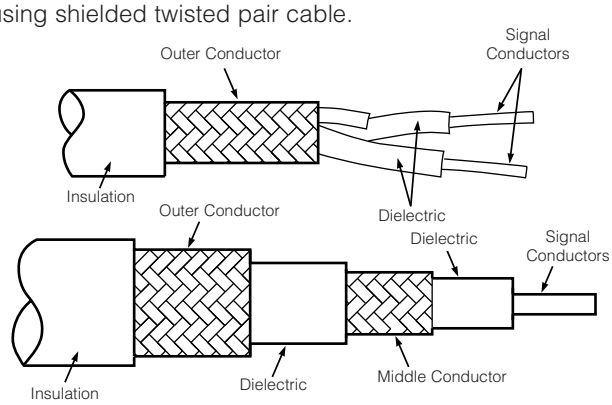

Figure 18

Twin Conductor and Triaxial Cable

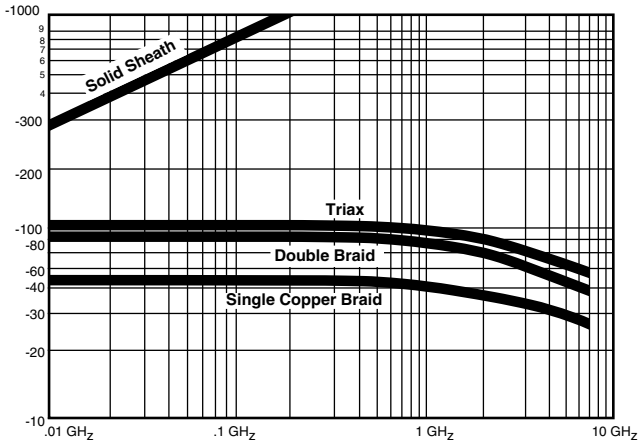

Figure 19

Shielding Efficiencies

Often you will hear the term “shielded cable”. This is very similar to coaxial cable except the spacing between center conductor and shield is not carefully controlled during manufacture, resulting in non-constant impedance.

Semi-rigid Coaxial Cable uses a solid tubular outer conductor rather than the braided type, so that all the RF energy is contained within the cable. One of the drawbacks of braided cable is that the shielding is not 100% effective, especially at higher frequencies. This is because the braided construction can permit small amounts of short wavelength (high frequency) energy to radiate. Normally this does not present a problem; however, if a higher degree of shielding is required, semi-rigid coaxial cable is recommended. For applications using frequencies higher than 30 GHz a miniature semi-rigid cable is recommended. Various connectors are available from TE to terminate these cables.

Ribbon Coaxial Cable is a relatively recent TE innovation which combines the advantages of both ribbon cable and coaxial cable. TE currently provides both the cable and the insulation displacing coaxial connector to terminate the cable. Each individual coaxial cable consists of the signal conductor, dielectric, a foil shield and a drain wire which is in continuous contact with the foil. The entire assembly is then covered with an outer insulating jacket. The unique manufacturing feature of this cable is the precise placement of the drain wires to permit gang stripping of the outer jacket and foil. The major advantage of this cable is the speed and ease with which it can be mass terminated with the TE insulation displacement technique. They can also be separated into individual coaxial lines and terminated with standard coaxial connectors as required.

Catalog 1308940
Revised 9-14

www.te.com

Dimensions are shown for reference purposes only. Specifications subject to change.

Dimensions are in millimeters unless otherwise specified.

USA: +1 800 522 6752
Asia Pacific: +86 0 400 820 6015
UK: +44 800 267 666

For additional support numbers please visit www.te.com

Appendix B - Typical Coaxial Cable Specifications

Abbreviations

Dielectric

PE .....Solid polyethylene
PTEE .....Solid polytetrafluoroethylene
PIB.....Polyisobutylene, Type B, per MIL-C-17
Rubber .....Per MIL-C-17D
Sil .....Silicone rubber
PS.....Polystyrene

Conductors and Braid Materials

AL .....Aluminum
SCAAI .....Silver covered copper covered aluminum
BC.....Bare copper
SC.....Silver covered copper
CCS .....Copper covered steel
TC.....Tinned copper
SCCS.....Silver covered copper covered steel
SCCad Br.....Silver covered cadmium bronze
GS.....Galvanized steel
TCCS .....Tin copper covered steel
SSC .....Silver covered strip
HR.....High resistance wire
SA .....Silver covered alloy

Jacket Material

PVC-I .....Black polyvinylchloride, contaminating, Type I, per MIL-C-17D
PVC-II .....Gray polyvinylchloride, noncontaminating, Type II, per MIL-C-17D
PVC-IIA.....Black polyvinylchloride, noncontaminating, Type IIA, per MIL-C-17D
PE-III.....Clear polyethylene
PE-IIIA .....High molecular weight, black polyethylene, Type IIIA, per MIL-C-17D
FG Braid V ....Fiberglass, impregnated, Type V, per MIL-C-17D
FEP-IX .....Fluorinated ethylene propylene, Type IX, per MIL-C-17D
PUR .....Polyurethane, black specific compounds
SIL/DAC-VI...Dacron braid over silicone rubber, Type VI, per MIL-C-17D
Rubber .....Per MIL-C-17D

RG/U Type Cable	Inner Conductor	Dielectric Material	DOD	Number/Type of Shielding Braids	Jacket Material	O.D.	Weight (lb/ft)	Nom. Imped. (Ohms)	Nom. Cap pf/ft	Max. Operating Temp. (C°)	Max. Operating Voltage (Volts RMS)	Comments
8	**2.17** .0855 7/**0.72** BC .0285	PE	**7.24** .285	1/BC	PVC-I	**10.29** .405	.106	52	29.5	−40 +80	4000	Use RG213
8A	**2.17** .0855 7/**0.72** BC .0285	PE	**7.24** .285	**.285** 1/BC	PVC-IIA	**10.29** .405	.106	52	29.5	−40 +80	5000	Use RG213
9	**2.17** .0855 7/**0.72** SC .0285	PE	**7.11** .280	2/Inner SC Outer BC	PVC-II	**10.67** .420	.140	51	30.0	−40 +80	4000	Use RG214
9A	**2.17** .0855 7/**0.72** SC .0285	PE	**7.11** .280	2/SC	PVC-II	**10.67** .420	.140	51	30.0	−40 +80	4000	Use RG214
9B	**2.17** .0855 7/**0.72** SC .0285	PE	**7.11** .280	2/SC	PVC-IIA	**10.67** .420	.150	50	30.8	−40 +80	5000	Use RG214
11	**1.21** .0477 7/**0.4** TC .0159	PE	**7.24** .285	1/BC	PVC-I	**10.29** .405	.096	75	20.6	−40 +80	4000	Use up to 100 MHz
11A	**1.21** .0477 7/**0.4** TC .0159	PE	**7.24** .285	1/BC	PVC-IIA	**10.29** .405	.096	75	20.6	−40 +80	5000	Use up to 1000 Mhz
55	**0.81** BC .0320	PE	**2.95** .116	2/TC	PE-III	**5.08** .200	.032	53.5	28.5	−55 +80	1900	Use RG55B
55A	**.0.89** SC .0350	PE	**2.95** .116	2/SC	PVC-IIA	**5.08** .200	.034	50	30.8	−40 +80	1900	Use RG223
55B	**0.81** SC .0320	PE	**2.95** .116	2/TC	PE-IIIA	**5.08** .200	.033	53.5	28.5	−55 +80	1900	Use up to 1000 MHz
58	**0.81** BC .0320	PE	**2.95** .116	1/TC	PVC-I	**4.95** .195	.029	53.5	28.5	−40 +80	1900	Use RG58B
58A	**0.9** .0355	PE	**2.95** .116	1/TC	PVC-I	**4.95** .195	.029	52	28.5	−40 +80	1900	Use RG58C
58B	**0.81** BC .0320	PE	**2.95** .116	1/TC	PVC-IIA	**4.95** .195	.029	53.5	28.5	−40 +80	1900	Use up to 1000 MHz
58C	**0.9** .0355 19/**0.8** TC .0071	PE	**2.95** .116	1/TC	PVC-IIA	**4.95** .195	.029	50	30.8	−40 +80	1900	Extra Flexible Version RG58B
59	**0.64** CCS .0253	PE	**3.71** .146	1/BC	PVC-I	**6.15** .242	.032	73	21.0	−40 +80	2300	Use RG59B
59A	**0.64** CCS .0253	PE	**3.71** .146	1/BC	PVC-IIA	**6.15** .242	.032	73	21.0	−40 +80	2300	Use RG59B
59B	**0.58** CCS .0230	PE	**3.71** .146	1/BC	PVC-IIA	**6.15** .242	.032	75	20.6	−40 +80	2300	Use up to 1000 MHz

Appendix B - Typical Coaxial Cable Specifications (Continued)

RG/U Type Cable	Inner Conductor	Dielectric Material	DOD	Number/Type of Shielding Braids	Jacket Material	O.D.	Weight (lb/ft)	Nom. Imped. (Ohms)	Nom. Cap pf/ft	Max. Operating Temp. (C°)	Max. Operating Voltage (Volts RMS)	Comments
62A	**0.64** CCS .0253	Air-space PE	**3.71** .146	1/BC	PVC-IIA	**6.15** .242	.038	93	13.5	−40 +80	750	Low Capacitance
62B	**0.61** .0240 7/**0.2** CCS .0080	Air-space PE	**3.71** .146	1/BC	PVC-IIA	**6.15** .242	.038	93	13.5	−40 +80	750	Extra Flexible RG62A
71	**0.64** CCS .0253	Air-space PE	**3.71** .146	2/TC	PVC-I	**6.22** .245	.046	93	13.5	−40 +80	750	Use RG71B
71A	**0.64** CCS .0253	Air-space PE	**3.71** .146	2/TC	PE-III	**6.22** .245	.046	93	13.5	−55 +80	750	Use RG71B
71B	**0.64** CCS .0253	Air-space PE	**3.71** .146	2/TC	PE-IIIA	**6.22** .245	.046	93	13.5	−55 +80	750	Low Capacitance
122	**0.76** .0300 7/**0.13** TC .0050	PE	**2.44** .096	1/TC	PVC-IIA	**4.06** .160	.016	50	29.4	−40 +80	1900	Use up to 1000 MHz
124	**0.64** TCCS .0253	Taped PTFE	**3.43** .135	1/TC	FG Braid-V	**6.1** .240	.210	73	20.3	−55 +250	2300	Use RG140
140	**0.64** SCCS .0250	PTFE	**3.71** 1.46	1/SC	FG Braid-V	**5.92** .233	.056	75	19.5	−55 +250	2300	See RG302 for FEP Jacket
141	**0.91** SCCS .0359	PTFE	**2.95** .116	1/SC	FG Braid-V	**4.83** .190	.036	50	29.4	−55 +250	1900	Use RG141A
141A	**0.99** SCCS .0390	PTFE	**2.95** .116	1/SC	FG Braid-V	**4.83** .190	.036	50	29.4	−55 +250	1900	See RG303 for FEP Jacket
142	**0.91** SCCS .0359	PTFE	**2.95** .116	2/SC	FG Braid-V	**4.95** .195	.047	50	29.4	−55 +250	1900	Use RG142A
142A	**0.99** SCCS .0390	PTFE	**2.95** .116	2/SC	FG	**4.95** .195	.047	50	29.4	−50 +250	1900	See RG142B for FEP Jacket
142B	**0.99** SCCS .0390	PTFE	**2.95** .116	2/SC	FEP	**4.95** .195	.047	50	29.4	−55 +250	1900	Standard Center Cond. Available
174	**0.48** .0189 7/**0.16** CCS .0063	PE	**1.52** .060	1/TC	PVC	**2.54** .100	.008	50	30.8	−40 +80	1500	Miniature Data Transmission
178	**0.3** .0120 7/**0.1** SCCS .0040	PTFE	**0.91** .036	1/SC	KEL-F	**1.83** .072	.0054	50	29.4	−40 +150	1000	Use RG178B
178B	**0.3** .0120 7/**0.1** SCCS .0040	PTFE	**0.86** .034	1/SC	FEP-IX	**1.83** .072	.0054	50	29.4	−55 +200	1000	High Strength Cond. Available
179	**0.3** .0120 7/**0.1** SCCS .0040	PTFE	**1.45** .057	1/SC	KEL-F	**2.54** .100	.010	70	20.4	−55 +150	1200	Use RG179B
180B	**0.3** .0120 7/**0.1** SCCS .0040	PTFE	**2.59** .102	1/SC	KEP-IX	**3.56** .140	.019	95	15.4	−55 +200	1500	High Strength Cond. Available
188	**0.51** .0201 7/**0.17** SCCS .0067	PTFE	**1.52** .060	1/SC	PTFE	**2.67** .105	.011	50	29.4	−55 +250	1200	Use RG316
188A	**0.51** .0201 7/**0.17** SCCS .0067	PTFE	**1.52** .060	1/SC	PTFE	**2.67** .105	.011	50	29.4	−55 +250	1200	Use RG316
195A	**0.3** .0120 7/**0.1** SCCS .004	PTFE	**2.59** .102	1/SC	PTFE	**3.68** .145	.020	95	15.4	−55 +250	1500	Use RG180B
210	**0.64** SCCS .0253	Air-Space PTFE	**3.71** .146	1/SC	FG Braid-V	**6.15** .242	.040	93	13.5	−55 +250	750	High Temp. Low Capacitance
213	**2.26** .0888 7/**0.75** BC .0296	PE	**7.24** .285	1/BC	PVC-IIA	**10.29** .405	.099	50	30.8	−40 +80	5000	Use up to 1000 MHz
214	**2.26** .0888 7/**0.75** SC .0296	PE	**7.24** .285	2/SC	PVC-IIA	**10.0** .425	.126	50	30.8	−40 +80	5000	Use up to 10,000 MHz

Catalog 1308940
Revised 9-14

www.te.com

Dimensions are shown for reference purposes only. Specifications subject to change.

Dimensions are in millimeters unless otherwise specified.

USA: +1 800 522 6752
Asia Pacific: +86 0 400 820 6015
UK: +44 800 267 666

For additional support numbers please visit www.te.com

Appendix B - Typical Coaxial Cable Specifications (Continued)

RG/U Type Cable	Inner Conductor	Dielectric Material	DOD	Number/Type of Shielding Braids	Jacket Material	O.D.	Weight (lb/ft)	Nom. Imped. (Ohms)	Nom. Cap pf/ft	Max. Operating Temp. (C°)	Max. Operating Voltage (Volts RMS)	Comments
216	**1.21** .0477 7/**0.75** BC .0159	PE	**7.24** .285	2/BC	PVC-IIA	**10.8** .425	.114	75	20.6	−40 +80	5000	Use up to 1000 MHz
223	**0.89** SC .035	PE	**2.95** .116	2/SC	PVC-IIA	**5.36** .211	.034	50	30.8	−40 +80	1900	Use up to 10,000 MHz
225	**2.38** .0936 7/**0.79** SC .0312	PTFE	**7.24** .285	2/SC	FG Braid-V	**10.92** .430	.180	50	29.4	−55 +250	5000	See RG393 for FEP Jacket
302	**0.64** SCCS .0250	PTFE	**3.71** .146	1/SC	FEP-IX	**5.11** .201	.030	75	19.5	−55 +200	2300	FEP Jacketed RG140
303	**0.99** SCCS .0390	PTFE	**2.95** .116	1/SC	FEP-IX	**4.32** .170	.088	50	29.4	−55 +200	1900	FEP Jacketed RG141A
316	**0.51** .0201 7/**0.17** SCCS .0067	PTFE	**1.52** .060	1/SC	FEDP-IX	**2.59** .102	.012	50	29.4	−55 +200	1200	FEP Jacketed RG188A
400	**0.98** .0385 19/**0.2** SPC .0077	PTFE	**2.95** .116	2/SC	FEP-IX	**4.95** .195	.050	50	29.3	−55 +200	1900	—
402	**0.91** SCCS .0360	PTFE	**3.02** .119	**3.58** OD .141 Copper Tube	None	**3.58** .141	.032	50	29.3	−40 +125	2500	Semi-rigid
405	**0.51** SCCS .0201	PTFE	**1.68** .066	**2.18** OD .086 Copper Tube	None	**2.19** .0865	.015	50	29.4	−40 +125	1500	Semi-rigid

Appendix C - Maximum Power Handling Capabilities for Cables

Average Input Power in Watts

RG/U Type Cable	Frequency in MHz								
	10	50	100	200	400	1,000	3,000	5,000	10,000
5, 5A, 5B	2,000	800	550	350	230	125	60	40	22
8, 8A, 10A, 213, 215	3,700	1,300	850	540	350	190	95	65	37
9, 9A, 9B, 214	3,700	1,300	850	540	350	190	95	65	37
11, 11A, 12, 12A, 13, 13A, 216	2,500	1,000	650	400	260	150	70	50	26
217	6,000	2,000	1,200	800	480	260	120	85	50
22, 22B	1,700	650	430	280	190	110	50	38	20
55, 55A, 55B, 223	800	310	205	137	90	53	28	20	10
58, 58B	730	280	180	125	85	50	25	17	—
58A, 58C	650	225	170	110	75	44	22	15	—
59, 59A, 59B	1,300	480	310	200	135	77	40	27	15
62, 62A, 71, 71A, 71B	1,300	480	310	200	135	77	40	27	15
62B	1,150	420	280	180	120	69	35	25	14
115, 115A, 165, 225, 393	25,000	9,500	6,300	4,300	2,800	1,700	880	620	350
108, 108A	340	145	100	70	50	30	15	—	—
122	540	205	140	90	60	35	18	12	—
140, 141, 141A, 142, 142B, 302, 303, 400, 402	9,000	3,500	2,400	1,600	1,100	650	350	245	140
143, 143A	11,500	4,600	3,200	2,100	1,450	850	460	330	190
144	25,000	9,500	6,300	4,300	2,800	1,700	880	620	350
161, 179, 179A, 179B, 187, 187A	1,600	780	570	420	310	200	110	76	41
174, 174A	170	72	50	36	25	16	—	—	—
178, 178A, 178B, 196, 196A	710	340	240	170	123	78	41	28	14
180, 180A, 180B, 195, 195A	2,500	1,100	800	570	400	250	135	93	50
188, 188A, 316	1,250	600	450	330	240	160	80	57	30
210	8,500	3,300	2,300	1,600	1,100	620	310	220	140

Note: Values above 3 GHz vary considerably depending on construction.
Conditions:
Ambient — 104°F [40°C]
Altitude — Sea level
Center Conductor Temperature — 176°F [80°C] for polyethylene, 392°F [200°C] for PTFE

Catalog 1308940
Revised 9-14

www.te.com

Dimensions are shown for reference purposes only. Specifications subject to change.

Dimensions are in millimeters unless otherwise specified.

USA: +1 800 522 6752
Asia Pacific: +86 0 400 820 6015
UK: +44 800 267 666

For additional support numbers please visit www.te.com

Appendix D - Nominal Loss Characteristics for Cables

Decibels per Hundred Feet

RG/U Type Cable	Frequency in MHz								
	10	50	100	200	400	1,000	3,000	5,000	10,000
5, 5A, 5B	.80	1.40	2.90	4.30	6.40	11.00	22.00	30.00	52.00
8, 8A, 10A, 213, 215	.66	1.50	2.20	3.20	4.60	9.00	19.00	28.00	47.00
9, 9A, 9B, 214	.66	1.50	2.20	3.20	4.60	9.00	19.00	28.00	47.00
11, 11A, 12, 12A, 13, 13A, 216	.66	1.50	2.20	3.20	4.60	9.00	19.00	28.00	—
217	.41	1.00	1.40	2.10	3.10	5.80	13.00	19.00	31.00
22, 22B	1.20	2.80	4.20	6.30	9.50	—	—	—	—
55, 55A, 55B, 223	1.35	3.00	4.30	6.00	8.80	16.50	36.00	51.00	85.00
58, 58B	1.20	3.10	4.60	7.00	10.00	17.50	38.00	—	—
58A, 58C	1.40	3.30	4.90	7.30	11.00	20.00	41.00	—	—
59, 59A, 59B	1.10	2.30	3.30	4.70	6.70	11.50	25.50	41.00	—
62, 62A, 71, 71A, 71B	.90	1.90	2.80	3.70	5.20	8.50	18.40	29.50	—
62B	.90	2.10	3.00	4.30	6.10	10.50	23.50	36.00	—
115, 115A, 165, 225, 393	.60	1.40	2.10	3.10	4.50	7.50	14.00	21.00	35.00
108, 108A	2.30	5.20	7.50	11.00	16.00	26.20	54.00	—	—
122	1.60	4.40	6.90	11.00	16.60	29.20	57.20	89.00	—
140, 141, 141A, 142, 142B, 302, 303, 400, 402	1.20	2.70	3.90	5.50	8.00	13.00	26.00	36.00	62.00
143, 143A	.85	1.80	2.50	3.80	5.70	9.70	18.10	26.10	40.70
144	.38	1.00	1.60	2.30	3.80	7.00	15.10	—	—
161, 179, 179A, 179B, 187, 187A	5.00	7.90	9.80	12.70	15.80	25.00	43.00	62.50	135.00
174, 174A	3.80	6.50	8.90	12.00	17.50	31.00	64.30	97.00	185.00
178, 178A, 178B, 196, 196A	5.30	10.00	13.30	20.00	27.50	45.00	78.00	115.00	172.00
180, 180A, 180B, 195, 195A	3.10	4.20	5.10	7.30	10.40	16.50	36.00	49.50	89.00
188, 188A, 316	3.80	7.90	11.50	15.00	20.00	30.00	58.00	79.00	133.00
210	.23	.58	.85	1.30	1.90	3.10	6.50	9.00	15.00

Note: Values above 3 GHz vary considerably depending on construction.

Conditions
Ambient —68°F [20°C]

Table of Contents

Introduction . . . . . 3-2 to 3-3
Expanded Beam Products
MIL Qualified Connectors (MIL-DTL-83526) 3-4
Pro Beam Mini Connectors . . . . . 3-5 to 3-7
Pro Beam Jr. Connectors . . . . . 3-8 to 3-11
Pro Beam Sr. Connectors 3-12, 3-13
38999 Series III Style Connectors . . . . . 3-14 to 3-16
Expanded Beam Contact (Size 16) 3-17
Cable Assemblies and Accessories . . . . . 3-18 to 3-19
Cables
Reels
Backpacks
Tactical Optical Cable 3-20
Commercial Fiber Optic Mechanical Splice Kits 3-21
Optical Test Set for Fiber Optic Cables 3-22
Hand Held Fault Locator 3-23
Expanded Beam Avionics-Related Standards and Specifications 3-24
ARINC 600 and 404 . . . . . 3-25 to 3-28
Physical Contact & Technology
ARINC 801 Optical Termini . . . . . 3-29 to 3-30
F12 ARINC 801 Insert Assemblies 3-31
ARINC 801 Optical Termini Adapter Dimensions 3-32
ARINC 801 Optical Termini Termination Kit 3-33
MIL-T-29504 3-34
Optical Inserts for EN4165 and ARINC 809 3-34
Fiber Optic Insert for DMC-M 3-34
RSC-v 3-34
Rugged Circular Connectors
38999 Style Connectors 3-35
MC3 . . . . . 3-36 to 3-39
MC4 . . . . . 3-40 to 3-41
MC5 . . . . . 3-42 to 3-45
MC6 . . . . . 3-46 to 3-48
MC801 3-49
Ruggedized Singleway Connector (RSC) . . . . . 3-50 to 3-52
Sealed Circular LC ODVA 3-53
Empire 3-54
Rugged Board Level Connectors
Ruggedized Optical Backplane Interconnect for VITA 66.1 3-55
Navy CID Approved - Epoxy Applied
Tight Jacketed LC Connectors 3-56
Tight Jacketed SC Connectors 3-57
LightCrimp Plus Navy Approved
LC, SC and LightCrimp Plus ST Approved by US Navy 3-58
Combination LightCrfimp Plus Termination Kit 3-59
LightCrimp Splice 3-60
Offshore Optical Connectors and Cable Assemblies 3-61

RoHS Ready

Catalog 1308940
Revised 9-14

www.te.com

Dimensions are shown for reference purposes only. Specifications subject to change.

Dimensions are in millimeters unless otherwise specified.

USA: +1 800 522 6752
Asia Pacific: +86 0 400 820 6015
UK: +44 800 267 666

For additional support numbers please visit www.te.com

Ruggedized Fiber Optic Products

Product Facts

- **Expanded Beam**
  - **PRO BEAM Sr.Connectors**
  - **PRO BEAM Jr.Connectors**
  - **PRO BEAM Mini Connectors**
  - **Mini 38999**
  - **Mini ARINC**
  - **Mini GPRC**
  - **Size 16 M29504 EB/4 and /5 varieties**

Physical Contact Technology

- **ARINC 801 MM and SM**
- **M29504 /4 and /5 MM and SM**
- **MC Series**
  - **MC3**
  - **MC3**
  - **MC5**
  - **MC6**
  - **MC801**
- **Rugged Single Channel (RSC)**
- **Sealed Circular LC ODVA Conforming Connector**

TE Connectivity (TE) is proud to offer a full rugged fiberoptic product family.

With TE's complete selection that includes world class Physical Contact and Expanded Beam technologies that include MC series of high density contact, a Rugged Single Channel and MT ribbon fiber as well as global industry standards of EN4165 and ARINC 801 along with our M83526/20 and /21 qualified products and wide variety of Expanded Beam technologies the end user is guaranteed a complete choice that meets their cost and optical performance needs in multiple industries.

For specific information, please contact your local TE Sales Representative.

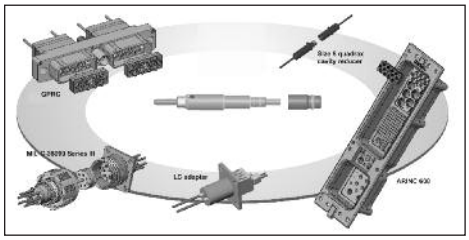

ARINC 801 Optical Termini

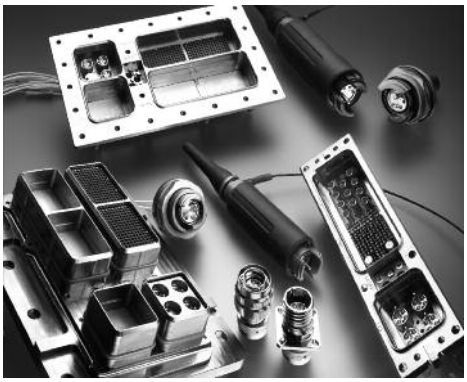

Expanded Beam Products

MC5 (JN1130) multiway connectors

EN4165 derivatives

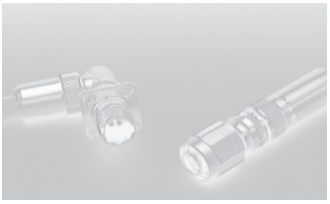

MC4

MC3 (JN1146) multiway connectors

MIL-T-29504

ASSEMBLY CAPABILITIES
TE Connectivity has extensive Rugged Optic Harness capabilities. Please consult your local TE Sales representative for assistance.

RSC (JN1148) single way connector

MC6

Catalog 1308940
Revised 9-14

www.te.com

Dimensions are shown for reference purposes only. Specifications subject to change.

Dimensions are in millimeters unless otherwise specified.

USA: +1 800 522 6752
Asia Pacific: +86 0 400 820 6015
UK: +44 800 267 666

For additional support numbers please visit www.te.com

Ruggedized Fiber Optic Products (Continued)

Expanded Beam Products

Product Facts

- **PRO BEAM Sr., PRO BEAM Jr. and PRO BEAM Mini Connector field deployable interconnects**
- **ARINC 600 connectors, with inserts/holder blocks designed for Mini Expanded Beam — up to 128 channels on size 3 ARINC 600**
- **MIL-C-38999 Series III shell size 11 and 15 style circular connectors — Cable assemblies up to 8 fibers**
- **Unique Modular Design, for use with multimode and singlemode fiber**
- **Tactical cables, cable reels, backpacks**
- **Cable assembly and termination services**
- **Ball lens expands cross-sectional area of light over 200 times for multimode and over 2000 times for singlemode**
- **Rugged hermaphroditic construction (i.e., same insert mates to each other)**
- **Physically non-contacting mating conditions; no wear, installed fiber ferrule protected by ball lens**

ASSEMBLY CAPABILITIES
TE Connectivity has extensive Rugged Optic Harness capabilities. Please consult your local TE Sales representative for assistance.

Expanded Beam Technology

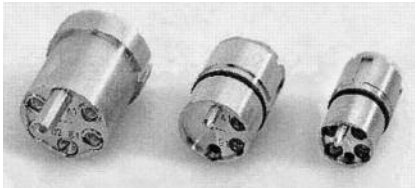

From left to right: PRO BEAM Sr., PRO BEAM Jr. & Mini Expanded Beam inserts.

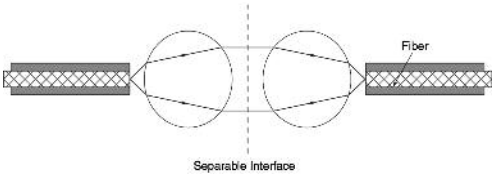

Expanded Beam Principle

Key Features

Fiber Optic Interconnect/ Cable System using Expanded Beam technology, which physically expands and collimates the transmission signal into an optical beam over 14 times its original diameter (the cross sectional area of the light beam increases over 200 times for multimode optical signals). For singlemode signals, the collimated beam is over 45 times its original diameter (the cross-sectional area of the light beam increases over 2,000 times.). It is then refocused back down onto the core of the receiving fiber. This approach provides ease of alignment and low sensitivity to thermal changes and contamination. High strength, precision connector housings enhance a durable connection, optimizing low loss and repeatable performance.

Applications

Suitable for field-deployable communications, marine ship-to-shore applications, security systems, mobile diagnostic units, oil and gas exploration and other harsh environment applications demanding strength, durability and reliable performance in conditions of multiple coupling/ decouplings, blindmate situations, and high vibration.

Product Facts

- **No wear on fiber optic interface; Very vibration resistant**
- **Easy to handle, easy to clean. Durable connection that is highly resistant to dirt/debris**
- **Singlemode or multimode**
- **Common 850/1300 Dual Wavelength, 1310, or 1550 nm wavelengths**
- **Easy alignment for low-loss, repeatable performance**
- **Consistent overall optical "link budget" assured**
- **Low sensitivity to thermal fluctuations and interface contamination**
- **Repeatable low-loss performance in harsh environments**

EB termini

- **Durable non-contacting interface assures ease of use/cleaning**
- **Termini designed to replace existing M29504/4 and /5 physical contact termini that fits the Size 16 AWG cavity of a D389999 III connector**
- **MM and SM termini designs**

Expanded Beam Inserts

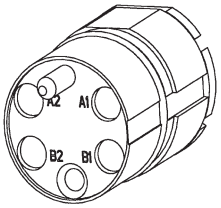

- **PRO BEAM Sr. Insert — the original, larger format, Field Tactical, hermaphroditic Connector System**
- **PRO BEAM Jr. Insert — the second generation, reduced size, Field Tactical Connector System — a TE Connectivity original design**
- **Mini Expanded Beam Insert for multi-channel small form factor — the smallest expanded beam multi-channel insert in the industry, another TE Connectivity original design**

Catalog 1308940
Revised 9-14

www.te.com

Dimensions are shown for reference purposes only. Specifications subject to change.

Dimensions are in millimeters unless otherwise specified.

USA: +1 800 522 6752
Asia Pacific: +86 0 400 820 6015
UK: +44 800 267 666

For additional support numbers please visit www.te.com

Expanded Beam Products

MIL-Qualified Connectors M83526/20 and M83526/21

The original now has a MIL-qualified version. The benchmark PRO BEAM Jr. connector series was the model for the MIL-DTL-83526/20 and /21 specifications. TE is now the first to gain full qualification to these specifications with TE's M83526/20 and M83526/21 connectors.

Product Facts

- **MIL-qualified to MIL-DTL-83526/20B and MIL-DTL-83526/21B**
- **QPD- (Qualified Products Database) listed on http://qpldocs.dla.mil/**
- **VG-approval to VG 95319-100 and -101**
- **Fully intermateable and interoperable with the benchmark PRO BEAM Jr. connector series**
- **TE's patented Interference-Fit expanded beam design technology yields unmatched high performance and high reliability**

TECHNICAL DOCUMENTS
408-32093 M83526/20 Plug
408-32107 M83526/21 Bulkhead
http://te.com/documents

Mil-DTL-83526/20B
Mil-DTL-83526/21B
http://quicksearch.dla.mil

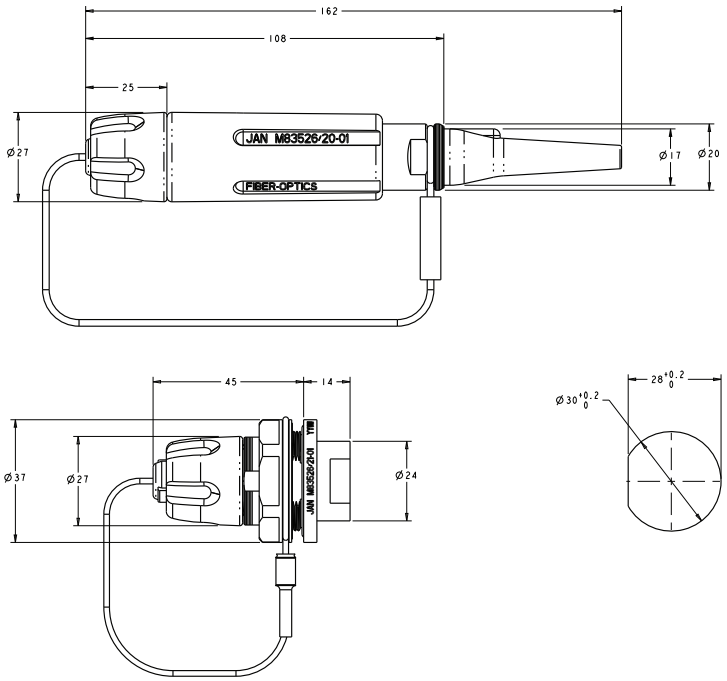

MIL-DTL-83526 Connector Assembly Part Numbers

P/N	Part Number	Description
M83526/20-01	2064556-1	4 x 850/1300 MM Plug
M83526/20-02	2064557-1	4 x 1310 SM Plug
M83526/20-03	2064558-1	4 x 1550 SM Plug
M83526/20-04	2064559-1	2 x 850/1300 MM Plug
M83526/20-05	2064560-1	2 x 1310 SM Plug
M83526/20-06	2064561-1	2 x 1550 SM Plug
M83526/21-01	2064562-1	4 x 850/1300 MM Bulkhead
M83526/21-02	2064563-1	4 x 1310 SM Bulkhead
M83526/21-03	2064564-1	4 x 1550 SM Bulkhead
M83526/21-04	2064565-1	2 x 850/1300 MM Bulkhead
M83526/21-05	2064566-1	2 x 1310 SM Bulkhead
M83526/21-06	2064567-1	2 x 1550 SM Bulkhead

VG numbers assigned as reference docs. Mil spec detail sheets will be formal guidance for orders
MIL-DTL-83426/20 = VG 95319-100
MIL-DTL-83426/21 = VG 95319-101

MFOCA - Mixed Mode

P/N	DLA P/N	Type	Channels	Color
1516546-1	10023-03	Plug	2 MM + 2 SM	Brown
1516547-1	10023-01	Plug	2 SM	Green
1516548-1	10023-02	Plug	2 MM	Black
1516702-1	10024-03	Bulkhead	2 MM + 2 SM	Brown
1516703-1	10024-01	Bulkhead	2 SM	Green
1516704-1	10024-02	Bulkhead	2 MM	Black

* for cable assembly applications please contact your local TE representative

Dimensions are shown for reference purposes only. Specifications subject to change.

Dimensions are in millimeters unless otherwise specified.

USA: +1 800 522 6752
Asia Pacific: +86 0 400 820 6015
UK: +44 800 267 666

For additional support numbers please visit www.te.com

Expanded Beam Products (Continued)

PRO BEAM Mini Connectors

TE Connectivity is pleased to announce the natural extension from our PRO BEAM Sr. and Jr. Connector product lines.

The PRO BEAM Mini Connector saves space and weight and is perfect for high density applications. The product offers the same durability as its larger counterparts.

PRO BEAM Sr., Jr. & Mini Connectors

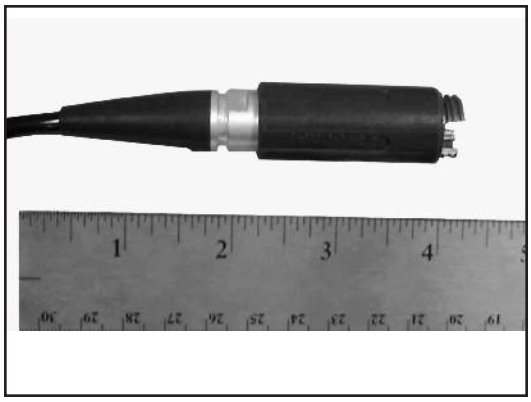

PRO BEAM Mini Plug Connector

Connector Assembly
1 Shell Kit
1 Insert Kit
1 Cable Adapter Kit*
X Ferrule Kits (X = No. of optical channels)

*Not applicable for Low Profile

PRO BEAM Mini Connector Shell Kits

Type	Mount Style	Attribute Difference	Part Number (HA Aluminum)	(OD Aluminum)	(NiAlBronze)	(Black Aluminum)
Plug		EPDM Grip	1828698-1	N/A	1828698-2	N/A
Bulkhead	D-Hole	Low Profile - Buffered Fiber	1828699-1	1828699-2 ♦	1828699-3	1828699-4
		Low Profile - 1.8 Jacketed	1985140-1	1985140-2 ♦	1985140-3	1985140-4
		Sealed	1918185-1	1918185-3	1918185-2	1918185-4
	Square Flange	Low Profile - Buffered Fiber	1828826-1	*	*	*
		Neutrik Cutout-Drop-In	1918603-1	*	*	*

* Contact TE for availability.

PRO BEAM Mini Insert Kits

Description	Part Number
2 x 850 / 1300 nm Dual Multimode	1374759-4
2 x 1310 nm Singlemode	1588129-2
2 x 1550 nm Singlemode	1588128-2
4 x 850 / 1300 nm Dual Multimode	1374759-2
4 x 1310 nm Singlemode	1588129-3
4 x 1550 nm Singlemode	1588128-3

PRO BEAM Mini Ferrule Kits

Fiber Hole Size	Mode	PRO BEAM Connector	Part Number
125 µm	SM	Mini	1754700-1
126 µm	SM	Mini	1754700-2
126 µm	MM	Mini	1754699-1

ASSEMBLY CAPABILITIES
TE Connectivity has extensive Rugged Optic Harness capabilities. Please consult your local TE Sales representative for assistance.

PRO BEAM Mini Cable Adapter Kits For Plug

Cable Diameter	Part Number Aluminum	NiAlBronze
5.1 mm	1828700-1	1828700-5
5.6 mm	1828700-2	1828700-6
6.2 mm	1828700-3	1828700-7
6.7 mm	1828700-4	1828700-8

PRO BEAM Mini Cable Adapter Kits For Sealed Bulkhead

Cable Diameter	Part Number
5.1 mm	1516228-1
5.6 mm	1516228-2
6.2 mm	1516228-3

Standard color black for Polymer Grip Rings, Cap and Boots. Alternate colors available upon request.

Note: Part Numbers are RoHS compliant except: ♦ Indicates non-RoHS compliant.

Dimensions are shown for reference purposes only. Specifications subject to change.

Dimensions are in millimeters unless otherwise specified.

USA: +1 800 522 6752
Asia Pacific: +86 0 400 820 6015
UK: +44 800 267 666

For additional support numbers please visit www.te.com

Expanded Beam Products (Continued)

PRO BEAM Mini Connectors

Performance Specifications

Optical, Multimode Version

Insertion Loss, Typical*— 0.7 dB @ 1300 nm and 850 nm dual wavelength

Optical, Singlemode Version

Insertion Loss, Typical*— 0.8 dB @ 1310 nm or 1550 nm optimized wavelength

Return Loss** — > 34 dB @ 1310 nm or 1550 nm optimized wavelength

*When tested with reference quality launch/receive cable assemblies

**RL Tested Open Ended

Mechanical

Vibration, Sinusoidal — 10 - 500 Hz, 3 directions; 0.75 mm amplitude @ 10g acceleration

Bump — 4,000 Bumps, 3 directions @ 40g acceleration

Free Fall — 500 falls on concrete; Severity 1.2 m

Coupling Endurance — 3,000 couplings

Weight — Plug — 50 grams, typical D-Hole bulkhead — 39 grams, typical

Temperature

Operational Temperature — -40°C/+85°C

Storage Temperature — -55°C/+85°C

Temperature, Cyclic — -55°C/+85°C

Humidity (Damp Heat) —95% RH

Immersion

Water — 5 m depth (plug) - 2 m (Bulkhead)

Pressure

Low Pressure — 25 kPa @ -55°C

Material and Finish

Shell Alloy — Aluminum; or nickel aluminum bronze (high saline environment)

Plating (For Aluminum Shells Only) — clear hard anodized; or green chromate conversion zinc or black zinc - nickel alloy (PRO BEAM Mini Bulkheads only)

Technical Documents

408-10065 Plug

408-10067 Square Flange Bulkhead

408-10069 Low Profile D-Hole Bulkhead

408-10076 Sealed D-Hole Bulkhead

http://www.te.com/documents

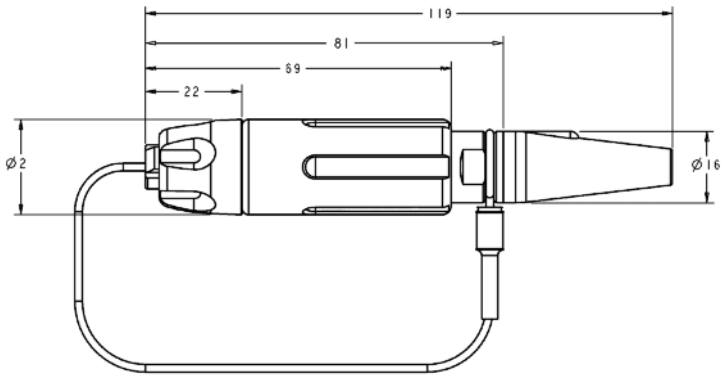

PRO BEAM Mini Cable Connector, Plug

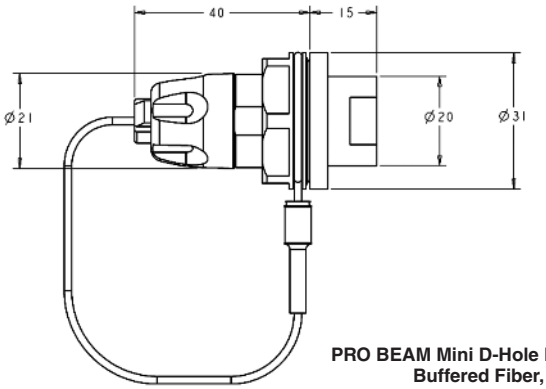

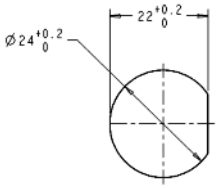

Recommended Panel Cutout

PRO BEAM Mini D-Hole Bulkhead Connector, Buffered Fiber, Low Profile

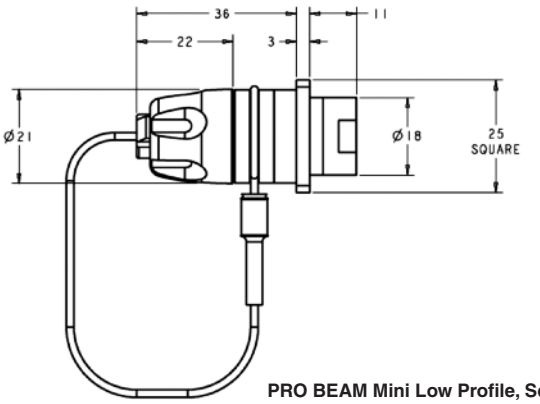

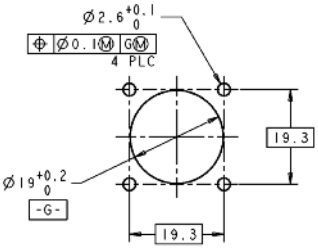

Recommended Panel Cutout

PRO BEAM Mini Low Profile, Square Flange Mount Bulkhead Connector

Catalog 1308940
Revised 9-14

www.te.com

Dimensions are shown for reference purposes only. Specifications subject to change.

Dimensions are in millimeters unless otherwise specified.

USA: +1 800 522 6752
Asia Pacific: +86 0 400 820 6015
UK: +44 800 267 666

For additional support numbers please visit www.te.com

Expanded Beam Products (Continued)

PRO BEAM Mini Connectors
(Continued)

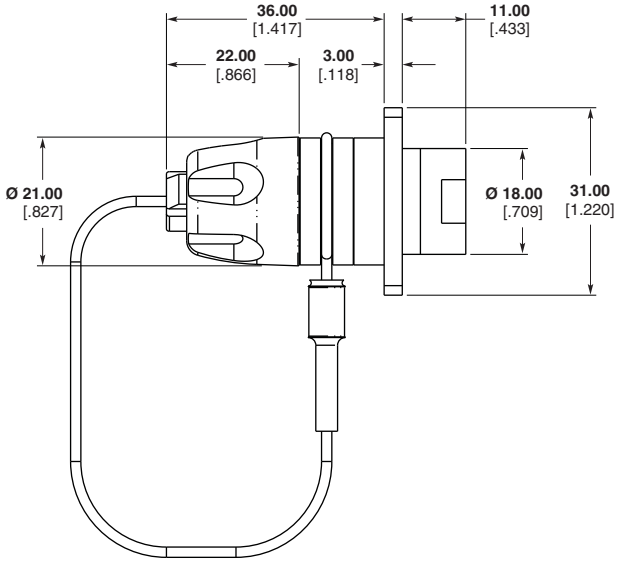

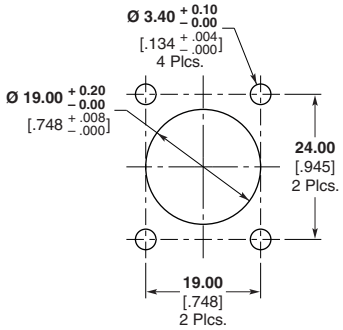

Recommended Panel Cutout

PRO BEAM Mini Low Profile,
Alternate Square Flange Mount Bulkhead Connector

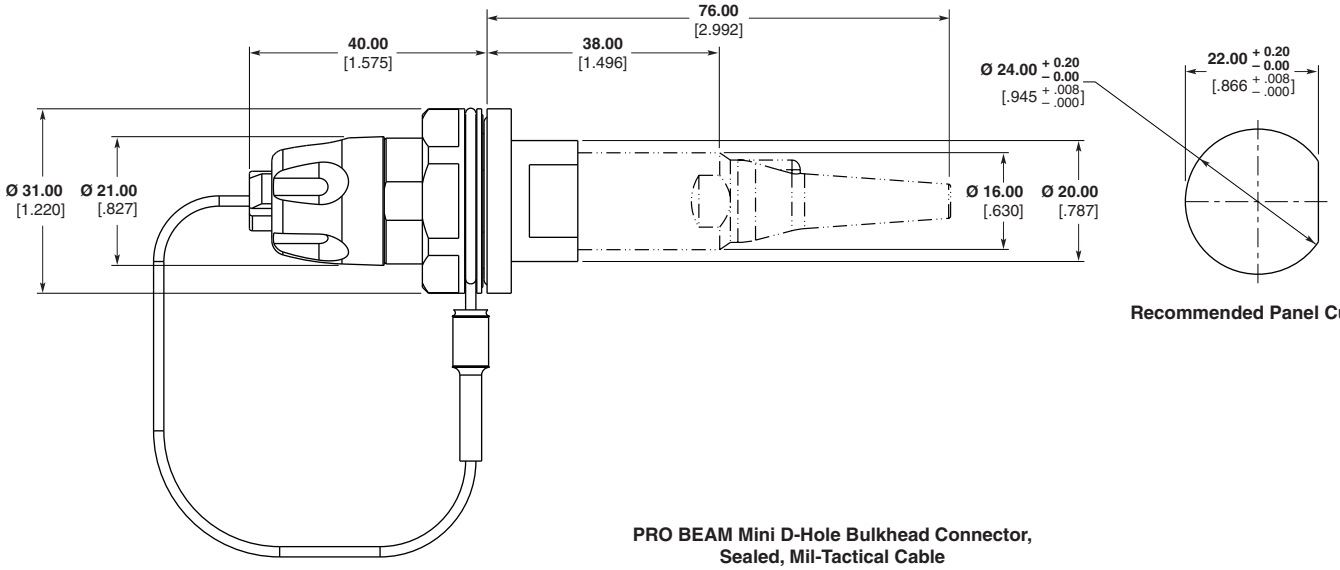

Recommended Panel Cutout

PRO BEAM Mini D-Hole Bulkhead Connector,
Sealed, Mil-Tactical Cable

Catalog 1308940
Revised 9-14

www.te.com

Dimensions are shown for reference purposes only. Specifications subject to change.

Dimensions are in millimeters unless otherwise specified.

USA: +1 800 522 6752
Asia Pacific: +86 0 400 820 6015
UK: +44 800 267 666

For additional support numbers please visit www.te.com

Expanded Beam Products (Continued)

PRO BEAM Jr. Connectors

Performance Specifications

Optical, Multimode Version

Insertion Loss, Typical* — 0.7 dB @ 1300 nm and 850 nm dual wavelength

Optical, Singlemode Version

Insertion Loss, Typical* — 0.8 dB @ 1310 nm or 1550 nm optimized wavelength

Return Loss** — > 34 dB @ 1310 nm or 1550 nm optimized wavelength

*When tested with reference quality launch/receive cable assemblies

**RL Tested Open Ended

Mechanical

Vibration, Sinusoidal — 10 - 500 Hz, 3 directions; 0.75 mm amplitude @ 10g acceleration

Bump — 4,000 Bumps, 6 directions @ 50g acceleration

Free Fall — 500 falls on concrete; Severity 1.2 m

Coupling Endurance — 3,000 couplings

Weight —
Plug — 123 grams, typical
D-Hole bulkhead — 102 grams, typical

Temperature

Operational Temperature — -40°C/+85°C

Storage Temperature — -55°C/+85°C

Temperature, Cyclic — -55°C/+85°C

Humidity (Damp Heat) —95% RH

Immersion

Water — 15 m depth (plug) - 15 m (Bulkhead)

Material and Finish

Shell Alloy — Aluminum; or nickel aluminum bronze (high saline environment)

Plating (For Aluminum Shells Only) — clear hard anodized; or green chromate conversion zinc or black zinc - nickel alloy (PRO BEAM Jr. Bulkheads only)

Bulkhead Connector Panel Thicknesses

PRO BEAM Jr. Bulkhead Connector D-Hole — 4 mm max.

PRO BEAM Jr. Bulkhead Connector Square Flange — 6 mm max.

Standard color black for Polymer Grip Rings, Cap and Boots. Alternate colors available upon request.

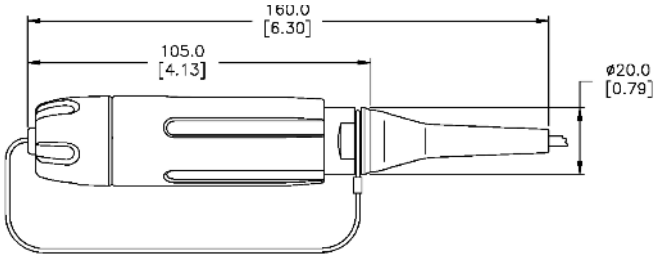

PRO BEAM Jr. Cable Connector, Plug

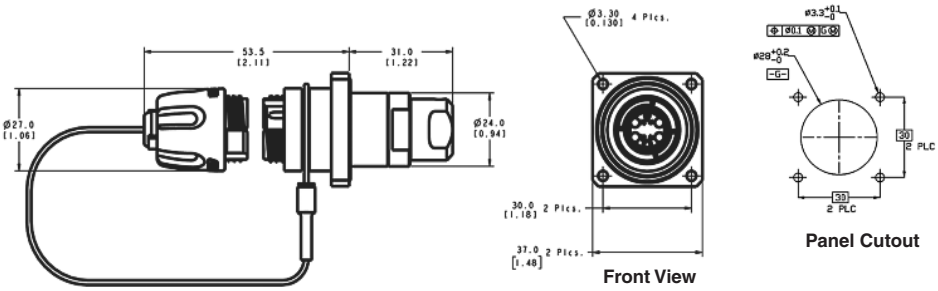

PRO BEAM Jr. Square Flange Mount Bulkhead Connector

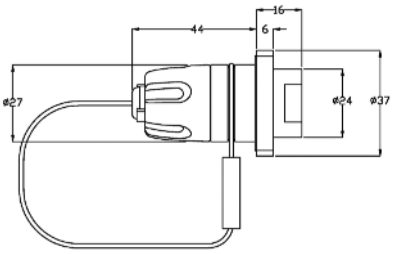

PRO BEAM Jr., Low Profile, Square Flange Mount Bulkhead Connector

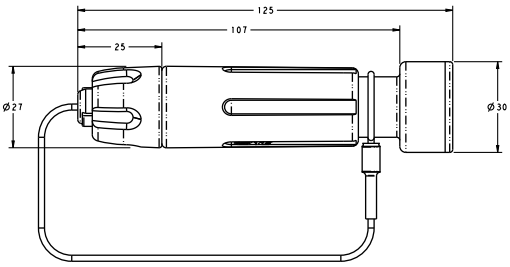

PRO BEAM Jr., Loopback Plug Connector

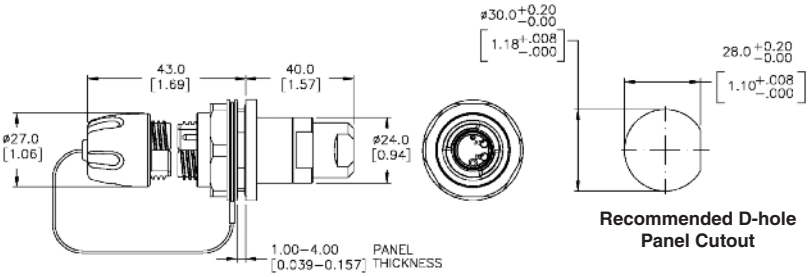

PRO BEAM Jr. D-Hole Standard Bulkhead Connector without Boot

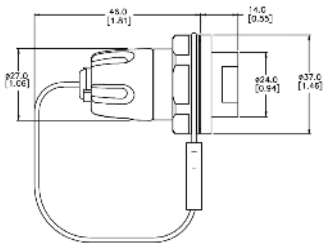

PRO BEAM Jr. Low Profile D-Hole Bulkhead Connector

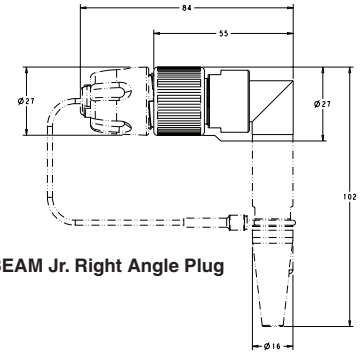

PRO BEAM Jr. Right Angle Plug

Dimensions are shown for reference purposes only. Specifications subject to change.

Dimensions are in millimeters unless otherwise specified.

USA: +1 800 522 6752
Asia Pacific: +86 0 400 820 6015
UK: +44 800 267 666

For additional support numbers please visit www.te.com

Expanded Beam Products (Continued)

PRO BEAM Jr. Connectors

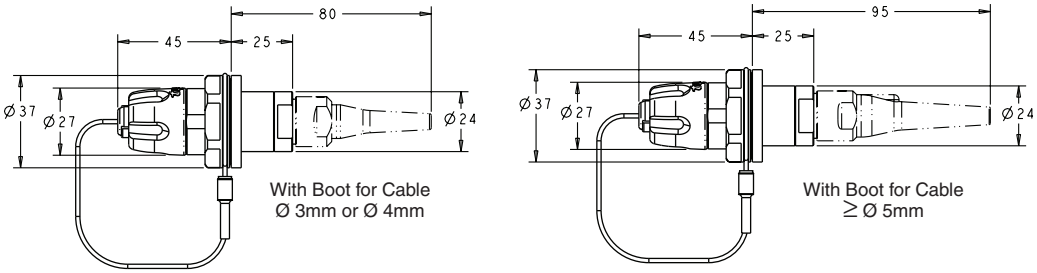

PRO BEAM Jr. Standard Bulkhead Connector, with Boot

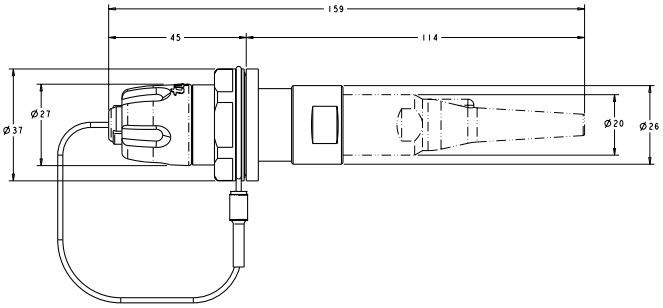

PRO BEAM Jr. Sealed Bulkhead Connector

Catalog 1308940
Revised 9-14

www.te.com

Dimensions are shown for reference purposes only. Specifications subject to change.

Dimensions are in millimeters unless otherwise specified.

USA: +1 800 522 6752
Asia Pacific: +86 0 400 820 6015
UK: +44 800 267 666

For additional support numbers please visit www.te.com

Expanded Beam Products (Continued)

PRO BEAM Jr. Connectors
(Continued)

Connector Assembly
1 Shell Kit
1 Insert Kit
1 Cable Adapter Kit*
X Ferrule Kits (X = No. of optical channels)

Part Numbers listed are Shell alloy = aluminum Plating = hard anodized. Consult TE Connectivity for other plating/material options such as non-cadmium olive drab or RoHS-compliant black Zn/Ni.

PRO BEAM Jr. Connector Shell Kits

Description	Alloy: Hard Anodized Aluminum Part Number	Alloy: NiAlBz Part Number	Alloy: Black Zinc Aluminum Part Number
PRO BEAM Jr. Plug w/EPDM rubber	1918937-1	1918937-2	—
PRO BEAM Jr. Right-Angle Plug Kit	1985915-1	—	—
PRO BEAM Jr. D-Hole Low Profile, Buffered Fiber Bulkhead	1693741-1	1693741-2	1754445-3
PRO BEAM Jr. D-Hole Low Profile, Simplex Cable Bulkhead	6828413-1	—	6828413-2
PRO BEAM Jr. D-Hole Standard Bulkhead	1918939-1	1918939-2	1918941-2
PRO BEAM Jr. D-Hole Sealed Bulkhead	1918940-1	1918940-2	1918940-4
PRO BEAM Jr. Square Flange Low Profile Buffered Fiber Bulkhead	1754439-1	1754439-2	1754447-3
PRO BEAM Jr. Square Flange Standard Bulkhead	1918943-1	1918943-2	—

PRO BEAM Jr. Loopback Plug Assembly

Description	Part Number
4 x 850 / 1300nm Multimode, 62.5/125 µm fiber	1516506-1
4 x 850 / 1300nm Multimode, OM3 50/125 µm fiber	1516506-2
4 x 1310nm Singlemode	1516506-3
4 x 1550nm Singlemode	1516506-4

PRO BEAM Jr. Insert Kits

Description	Part Number
2 x 850 / 1300nm Multimode	1515743-1
2 x 1310nm Singlemode	1515739-1
2 x 1550nm Singlemode	1516040-1
4 x 850 / 1300nm Multimode	1515747-1
4 x 1310nm Singlemode	1515740-1
4 x 1550nm Singlemode	1516041-1

Ferrule Kits

Fiber Hole Size	Mode	PRO BEAM	Part Number
125 m	SM	Jr.	1588908-2
126 m	SM	Jr.	1588908-1
126 m	MM	Jr.	1588700-1

PRO BEAM Jr. Connector Plug & Sealed Bulkhead Cable Adapter Kits

Cable Dia. Max.	Aluminum Plug Part Number	NiAlBz Plug Part Number	Aluminum Sealed Bulkhead Part Number	NiAlBz Sealed Bulkhead Part Number	Black Zn-Ni Part Number
3.2	1918931-1	1918931-9	1918932-1	1918932-9	2-1918932-5
3.6	1918931-2	1-1918931-0	1918932-2	1-1918932-0	2-1918932-6
4.2	1918931-3	1-1918931-1	1918932-3	1-1918932-1	2-1918932-7
5.2	1918931-4	1-1918931-2	1918932-4	1-1918932-2	2-1918932-8
5.7	1918931-5	1-1918931-3	1918932-5	1-1918932-3	2-1918932-9
6.2	1918931-6	1-1918931-4	1918932-6	1-1918932-4	3-1918932-0
6.7	1918931-7	1-1918931-5	1918932-7	1-1918932-5	3-1918932-1
7.5 (breakout cable only)	1918931-8	1-1918931-6	1918932-8	1-1918932-6	3-1918932-2

PRO BEAM Jr. Connector Standard Bulkhead Cable Adapter Kits*

Cable Dia. Max.	Aluminum with Boot Part Number	NiAlBz with Boot Part Number	Black Zn-Ni Part Number	Aluminum without Boot Part Number	NiAlBz without Boot Part Number	Black Zn-Ni Part Number
3.2	1918933-1	1918933-9	2-1918933-5	1918934-1	1918934-8	2-1918934-2
4.1	1918933-2	1-1918933-0	2-1918933-6	1918934-2	1918934-9	2-1918934-3
5.1	1918933-3	1-1918933-1	2-1918933-7	1918934-3	1-1918934-0	2-1918934-4
5.5	1918933-4	1-1918933-2	2-1918933-8	1918934-4	1-1918934-1	2-1918934-5
6.0	1918933-5	1-1918933-3	2-1918933-9	1918934-5	1-1918934-2	2-1918934-6
4 x 3.00	1918933-8	1-1918933-6	3-1918933-2	1918934-7	1-1918934-4	2-1918934-8

* Standard Cable Adapter. Not applicable for Low Profile.

Note: Part Numbers are RoHS compliant except: ♦ Indicates non-RoHS compliant.

Technical Documents

Product Specification
108-2177 Design Objectives

Application Specification
114-13099

Instruction Sheets
408-10250 Grounding and Standard D-Hole Bulkhead
408-10222 Plug
408-10249 Sealed D-Hole Bulkhead
408-8834 Low Profile Square Flange Bulkhead
408-8840 Low Profile D-Hole Bulkhead
408-10251 Standard Square Flange Bulkhead
408-10018 Low Profile D-Hole Simplex Cable Bulkhead
408-10252 7.5 Cable Adapter

http://www.te.com/documents

Dimensions are shown for reference purposes only. Specifications subject to change.

Dimensions are in millimeters unless otherwise specified.

USA: +1 800 522 6752
Asia Pacific: +86 0 400 820 6015
UK: +44 800 267 666

For additional support numbers please visit www.te.com

Expanded Beam Products (Continued)

PRO BEAM Jr. Connectors
(Continued)

Spare Parts & Tools

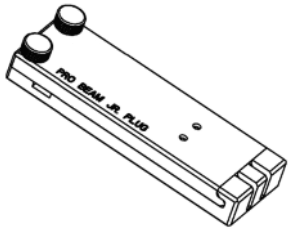

Technical Documents

Product Specifications

408-8857 Curing Fixtures for PRO BEAM Jr. and Sr. Connectors

408-8828 Cleaning Procedure for EB C/A's

Tooling Specifications

408-8795 Crimp Tool with Die Set for PRO BEAM Jr. and Sr. Connectors

408-10022 Die Assembly for Mini and Jr. Circular Crimps

http://www.te.com/documents

Curing Fixtures

Connector	Part Number
PRO BEAM Jr. Cable Plug (having cable with KEVLAR strength member fiber)	1693797-1
PRO BEAM Jr. Sealed D-Hole Bulkhead	
PRO BEAM Jr. Standard D-Hole and Square Flange Bulkhead	1693800-1
PRO BEAM Jr. Low Profile Buffered Fiber Bulkhead	1754122-1

Instruction Sheet 408-8857. Available at www.te.com

Cable Crimp Components

Description	Part Number
Crimp Sleeve (use with all PRO BEAM Jr. Connector Crimp Support sizes)	1918497-1
3.2 mm Crimp Support	1918498-1
4.2 mm Crimp Support	1918498-2
5.2 mm Crimp Support	1918498-3
5.7 mm Crimp Support	1918498-4
6.2 mm Crimp Support	1918498-5
6.7 mm Crimp Support	1918498-6
Square Crimp Support for (4) 3 mm Cables	1985319-1

Ferrule Kits

Fiber Hole Size	Mode	PRO BEAM	Part Number
125 µm	SM	Jr.	1588908-2
126 µm	SM	Jr.	1588908-1
126 µm	MM	Jr.	1588700-1

Protective Caps

Description	PRO BEAM	Part Number
Standard cap, for D-Hole Bulkhead	Jr.	1515868-1
Standard cap, for Flange Mount Bulkhead	Jr.	1515787-2
Standard cap, for connector plug	Jr.	1515867-1

Termination Kit

Part Number
1828650-1

KEVLAR is a trademark of E. I. du Pont de Nemours and Company.

Note: All part numbers are RoHS compliant.

Expanded Beam Products (Continued)

PRO BEAM Sr. Connectors

Performance Specifications

Optical, Multimode Version

Insertion Loss, Typical*— 0.7 dB @ 1300 nm and 850 nm dual wavelength

Optical, Singlemode Version

Insertion Loss, Typical*— 0.8 dB @ 1310 nm or 1550 nm optimized wavelength

Return Loss** — > 34 dB @ 1310 nm or 1550 nm optimized wavelength

*When tested with reference quality launch/receive cable assemblies

**RL Tested Open Ended

Mechanical

Vibration, Sinusoidal — 10 - 500 Hz, 3 directions; 0.75 mm amplitude @ 10g acceleration

Bump — 4,000 Bumps, 6 directions, @ 50g acceleration

Free Fall — 500 falls on concrete; Severity 1.2 m

Coupling Endurance — 3,000 couplings

Weight —
Plug — 290 grams, typical
Chassis bulkhead — 150 grams, typical

Temperature

Operational Temperature — -40°C/+85°C

Storage Temperature — -55°C/+85°C

Temperature, Cyclic — -55°C/+85°C

Humidity (Damp Heat) —95% RH

Immersion

Water — 5 m depth (plug), 2 m (Bulkhead)

Material and Finish

Shell Alloy — Aluminum; or nickel aluminum bronze (high saline environment)

Plating (For Aluminum Shells Only) — clear hard anodized or black zinc - nickel alloy (PRO BEAM Sr. bulkheads only)

Bulkhead Connector Panel Thicknesses

PRO BEAM Sr. D-Hole Connector — 6.5 mm max.

PRO BEAM Sr. Square Flange Connector — 8.5 mm max.

Technical Documents

Product Specifications
408-8799 Plug
408-8800 D-Hole Bulkhead
408-8877 Square Flange Bulkhead

Application Specification
114-13122

http://www.te.com/documents

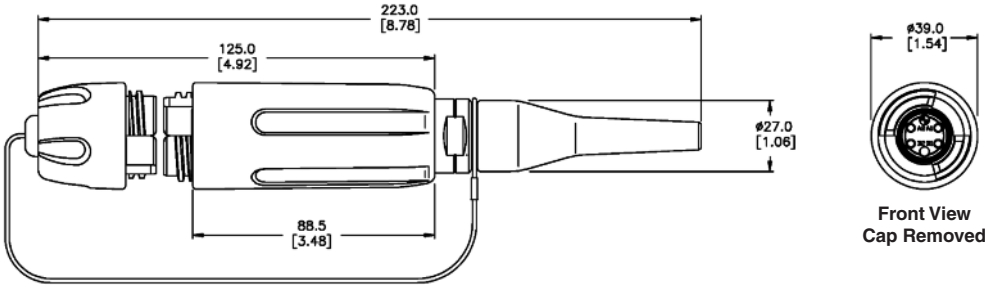

PRO BEAM Sr. Cable Connector, Plug

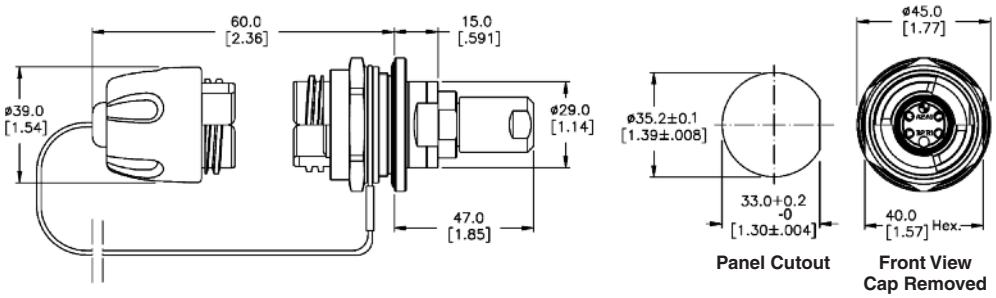

PRO BEAM Sr. D-Hole Bulkhead Connector with Standard Cable Adapter

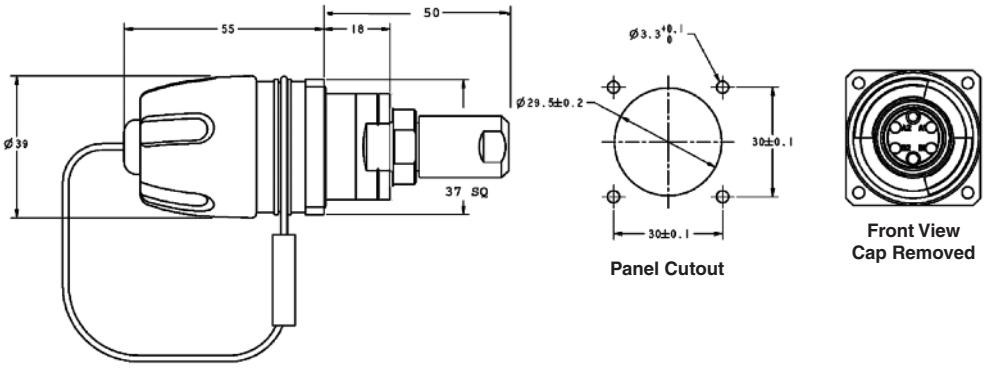

PRO BEAM Sr. Square Flange Mount Bulkhead Connector with Standard Cable Adapter

Standard color black for Polymer Grip Rings, Cap and Boots. Alternate colors available upon request.

Expanded Beam Products (Continued)

PRO BEAM Sr. Connectors
(Continued)

Connector Assembly
1 Shell Kit
1 Insert Kit
1 Cable Adapter Kit*
X Ferrule Kits (X = No. of optical channels)

*Not applicable for Low Profile

Part numbers listed are Shell alloy = aluminum Plating = hard anodized. Consult TE Connectivity for other plating/material options such as NiAlBz for Naval applications, or other plating options such as RoHS-compliant black Zn-Ni.

ASSEMBLY CAPABILITIES
TE Connectivity has extensive Rugged Optic Harness capabilities. Please consult your local TE Sales representative for assistance.

PRO BEAM Sr. Connector Shell Kits	Alloy: Aluminum Part Number	Alloy: NiAlBz Part Number
PRO BEAM Sr. Plug w/EPDM rubber	1754842-1	1754842-2
PRO BEAM Sr. D-Hole Standard Bulkhead	1754843-1	1754843-2
PRO BEAM Sr. Square Flange Standard Bulkhead	1754844-1	1754844-2

PRO BEAM Sr. Insert Kits	Part Number
2 x 850 / 1300 nm Multimode	1693001-1
2 x 1310 nm Singlemode	1515734-2
4 x 850 / 1300 nm Multimode	1693001-2
4 x 1310 nm Singlemode	1515735-1
8 x 850/1300 nm Multimode	1516256-1
8 x 1310 nm Singlemode	1516258-1
8 x 1550 nm Singlemode	1516258-2

PRO BEAM Sr. Ferrule Kits

Fiber Hole Size	Mode	Insert Application	Part Number
125 µm	SM	2 & 4 Channel	1515941-1
126 µm	SM	2 & 4 Channel	1515941-2
126 µm	MM	2 & 4 Channel	1588801-1
125 µm	SM	8 Channel	1985635-1
126 µm	SM	8 Channel	1985635-2
126 µm	MM	8 Channel	1985107-1

PRO BEAM Sr. Connector Plug Adapter Kits

Cable Dia. (Max.)	Alloy: Aluminum Part Number	Alloy: NiAlBz Part Number
5.10 .201	1515940-1	1515940-2
5.65 .222	1515940-3	1515940-4
6.20 .244	1515940-5	1515940-6
6.70 .264	1515940-7	1515940-8

PRO BEAM Sr. Connector Standard Bulkhead Cable Adapter Kits

Cable Dia. (Max.)	Style	Alloy: Aluminum Part Number	Alloy: NiAlBz Part Number
5.20 .205	Standard Cable Adapter	1516229-3	1516229-7
5.70 .224	Standard Cable Adapter	1516229-2	1516229-6
Buffered Fiber	Low Profile Adapter	1516229-4	1516229-8
6.70 .264	Standard Cable Adapter	1-1516229-3	1-1516229-4
4 x 3 mm	Standard Cable Adapter	1516229-1	1-1516229-5

Technical Documents

Product Specifications
408-8857 Curing Fixtures for PRO BEAM Jr. and Sr. Connectors
408-8828 Cleaning Procedure for EB C/A's

Tooling Specifications
408-8795 Crimp Tool with Die Set for PRO BEAM Jr. and Sr. Connectors

http://www.te.com/documents

Note: All part numbers are RoHS compliant.

Catalog 1308940
Revised 9-14
www.te.com

Dimensions are shown for reference purposes only. Specifications subject to change.

Dimensions are in millimeters unless otherwise specified.

USA: +1 800 522 6752
Asia Pacific: +86 0 400 820 6015
UK: +44 800 267 666

For additional support numbers please visit www.te.com

Expanded Beam Products (Continued)

38999 Style EB for Harsh Environments

Product Facts

- **Available in shell size 11, housed on D38999 Series III style shells for harness applications**
- **Multiple options available for backshells. Consult your local TE Connectivity Sales Representative**
- **Shell polarizations A through E available upon request**

Standard Material and Finish

Shell Alloy — Aluminum

Plating — Nickel or green chromated zinc or RoHS-compliant black chromated zinc-nickel alloy

*Refer to customer drawing for dash number designation

For part number details and plating options, contact your local TE Connectivity Sales Representative.

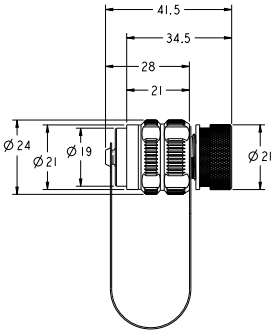

38999 Plug Shell Kit for mini EB

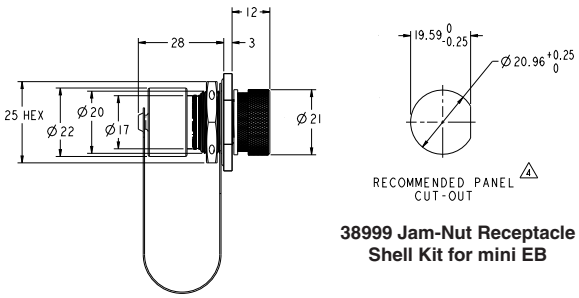

38999 Jam-Nut Receptacle Shell Kit for mini EB

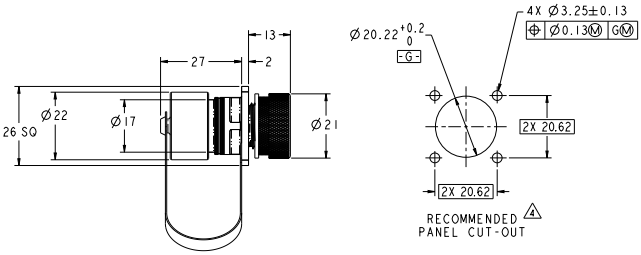

38999 Shell Kit Wall Mount Receptacle for mini EB

ASSEMBLY CAPABILITIES
TE Connectivity has extensive Rugged Optic Harness capabilities. Please consult your local TE Sales representative for assistance.

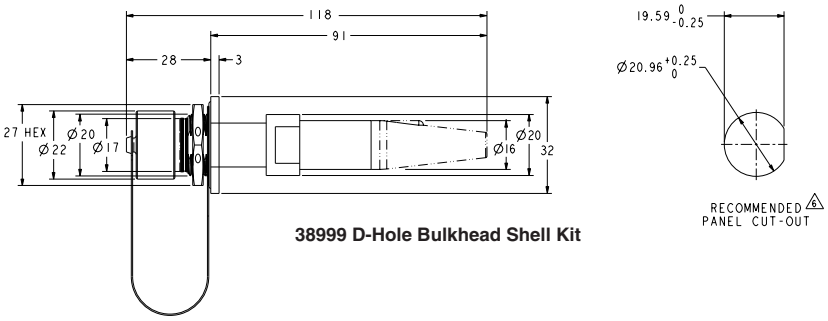

38999 D-Hole Bulkhead Shell Kit

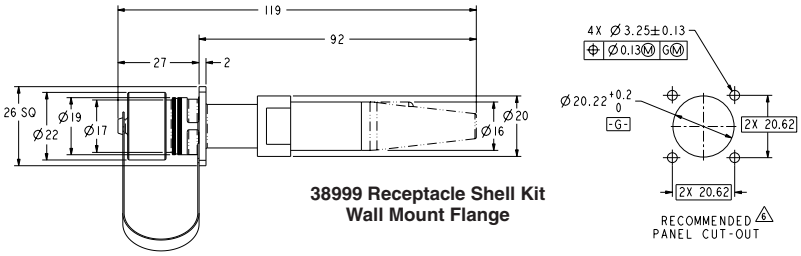

38999 Receptacle Shell Kit Wall Mount Flange

Note: All part numbers are RoHS compliant.

Catalog 1308940
Revised 9-14

www.te.com

Dimensions are shown for reference purposes only. Specifications subject to change.

Dimensions are in millimeters unless otherwise specified.

USA: +1 800 522 6752
Asia Pacific: +86 0 400 820 6015
UK: +44 800 267 666

For additional support numbers please visit www.te.com

Expanded Beam Products (Continued)

38999-style EB for Harsh Environments (Continued)

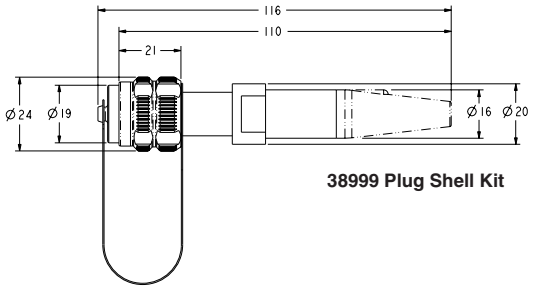

38999 Plug Shell Kit

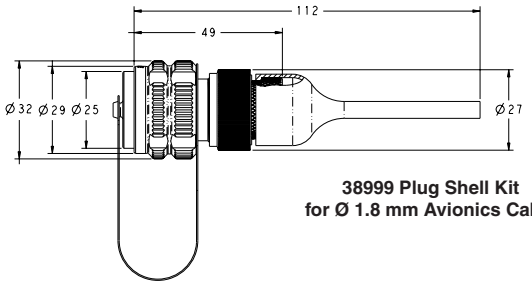

38999 Plug Shell Kit for Ø 1.8 mm Avionics Cable

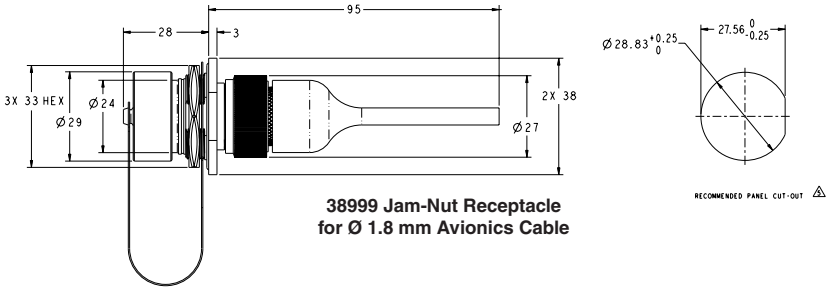

38999 Jam-Nut Receptacle for Ø 1.8 mm Avionics Cable

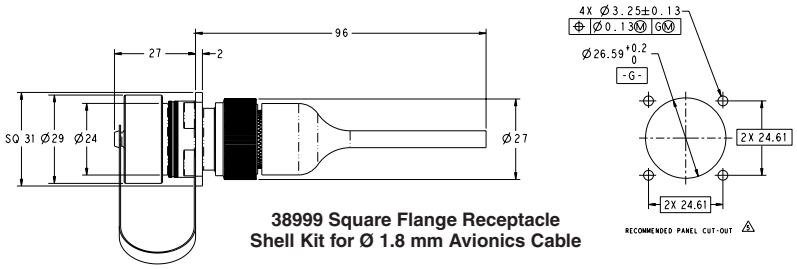

38999 Square Flange Receptacle Shell Kit for Ø 1.8 mm Avionics Cable

Dimensions are shown for reference purposes only. Specifications subject to change.

Dimensions are in millimeters unless otherwise specified.

USA: +1 800 522 6752
Asia Pacific: +86 0 400 820 6015
UK: +44 800 267 666

For additional support numbers please visit www.te.com

Expanded Beam Products (Continued)

38999-style EB for Harsh Environments (Continued)

Size 11 Shield Kit

	Mini EB 38999 Connector Shell Kits (N-Key)								
Use with:	Ø1.8 mm Max Avionics Cable			MIL-Tactical Distribution Cable			Buffered Fiber Only		
Finish:	Electroless Ni Plate	OD Zn	Black Zn-Ni	Electroless Ni Plate	OD Zn	Black Zn-Ni	Electroless Ni Plate	OD Zn	Black Zn-Ni
Plug:	6754518-1	1754518-7 ♦	6754518-7	1985021-1	1985021-7 ♦	—	1918883-1	1918883-7 ♦	1-1918883-3
Jam-Nut Receptacle:	6754519-1	1754519-7 ♦	6754519-7	2064163-1	2064163-7 ♦	—	1918884-1	1918884-7 ♦	1-1918884-3
Flange-Mount Receptacle:	6754520-1	1754520-7 ♦	6754520-7	2064166-1	2064166-7 ♦	—	1918885-1	1918885-7 ♦	1-1918885-3

* Contact TE Connectivity for availability.

Size 15 Shield Kit

Use with:	2.2 mm Ø Max Avionics Cable		End Nut Backshell for Non-Jacketed Cable	
Finish:	Electroless Nickel Plate	Black Zinc Nickel	Electroless Nickel Plate	Black Zinc Nickel
Plug:	1516342-1	1516342-7	1516338-1	1516338-7
Jam-Nut Receptacle:	1516343-1	1516343-7	1516339-1	1516339-7
Flange-Mount Receptacle:	1516344-1	1516344-7	1516340-1	1516340-7

Cable Adapter Kits For 38999 Mini EB Mil-Tactical

Cable Diameter	Part Number
5.1 mm	1516228-1
5.6 mm	1516228-2
6.2 mm	1516228-3

Insert Kits

Description	Part Number
Mini 2 x 850 / 1300 nm Dual Multimode	1374759-4
Mini 2 x 1310 nm Singlemode	1588129-2
Mini 2 x 1550 nm Singlemode	1588128-2
Mini 4 x 850 / 1300 nm Dual Multimode	1374759-2
Mini 4 x 1310 nm Singlemode	1588129-3
Mini 4 x 1550 nm Singlemode	1588128-3
8 x 850/1300 nm Multimode	1516256-1
8 x 1310 nm Singlemode	1516258-1
8 x 1550 nm Singlemode	1516258-2

Ferrule Kits

Fiber Hole Size	Mode	Insert Type	Part Number
125 µm	SM	Mini	1754700-1
126 µm	SM	Mini	1754700-2
126 µm	MM	Mini	1754699-1
125 µm	SM	8 Channel	1985635-1
126 µm	SM	8 Channel	1985635-2
126 µm	MM	8 Channel	1985107-1

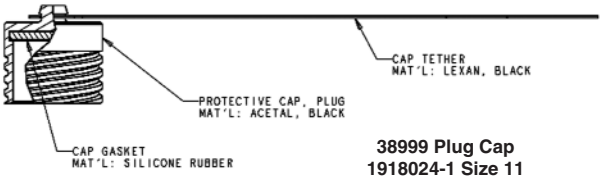

38999 Plug Cap
1918024-1 Size 11
1918024-2 Size 15

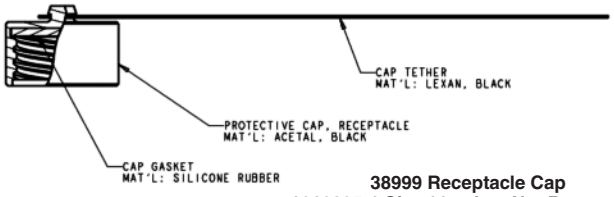

38999 Receptacle Cap
1918025-1 Size 11 = Jam Nut Receptacle
1918025-2 Size 11 = Square Flange Receptacle
1918025-3 Size 15 = Jam Nut Receptacle
1918025-4 Size 15 = Square Flange Receptacle

Note: Part Numbers are RoHS compliant except: ♦ Indicates non-RoHS compliant.

Dimensions are shown for reference purposes only. Specifications subject to change.

Dimensions are in millimeters unless otherwise specified.

USA: +1 800 522 6752
Asia Pacific: +86 0 400 820 6015
UK: +44 800 267 666

For additional support numbers please visit www.te.com

Expanded Beam Products (Continued)

EB termini

Product Facts

- **Durable non-contacting interface assures ease of use/cleaning**
- **Termini designed to replace existing M29504/4 and /5 physical contact termini that fits the Size 16 AWG cavity of a D38999 III connector**
- **MM and SM termini designs**

EB termini are combination of inserts (containing the lens) and EB termini (for terminating the fiber.

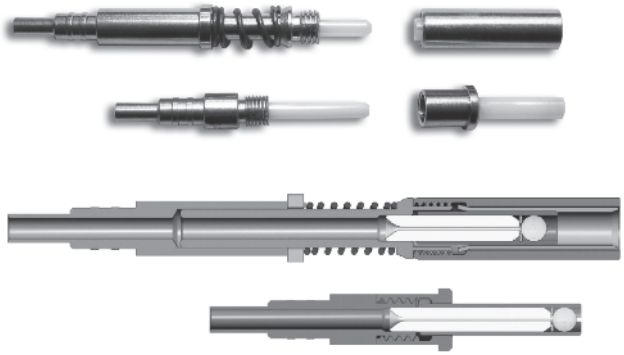

Catalog 1308940
Revised 9-14

www.te.com

Dimensions are shown for reference purposes only. Specifications subject to change.

Dimensions are in millimeters unless otherwise specified.

USA: +1 800 522 6752
Asia Pacific: +86 0 400 820 6015
UK: +44 800 267 666

For additional support numbers please visit www.te.com

Cable Assemblies and Accessories

Product Facts

- Ruggedized cable assemblies custom tailored for field use in harsh environments
- Heavy-duty light-weight cable reel organizes and protects connectors and cable for easy pay-out and safe storage
- Options for 500 meter reels include special backpack harnesses, a separate reel stand, or a combination reel and reel stand

Featured Cable Assemblies

TFOCA to PRO BEAM Jr. Plug Cable Assembly
1828536-1 ♦

LP D-Hole Bulkhead to 4 ST 62.5/125 on 1.8 mm cable
6828454-1 ♦

Plug to Plug (100 meters)
6754475-2

Typical Reels and Reel Stands for Field-Deployable Cable Assemblies

1918930-1

Tactical Reel/Drum Options

Cable Reels

Reel Capacity (Random Lay)

Cable Diameter 5.8 mm	Notes/Description	Flange Diameter	Part Number
186 M	Reel & Reel Stand Combination Reel can be detached from stand without tools	310 mm	1918930-1
247 M	Reel*	310 mm	1754515-1
462 M	Reel*	370 mm	1754515-2
816 M	Reel*	460 mm	1754515-3
1052 M	Reel*	510 mm	1754515-4

* See Accessories options below

PRO BEAM Jr. Kits

PRO BEAM Jr. Termination Kit
1828650-1

Cleaning Kit
1828335-2

TFOCA-II is a trademark of Amphenol Fiber Systems International.

Note: Part Numbers are RoHS compliant except: ♦ Indicates non-RoHS compliant.

Dimensions are shown for reference purposes only. Specifications subject to change.

Dimensions are in millimeters unless otherwise specified.

USA: +1 800 522 6752
Asia Pacific: +86 0 400 820 6015
UK: +44 800 267 666

For additional support numbers please visit www.te.com

Cable Assemblies and Accessories (Continued)

ASSEMBLY CAPABILITIES
TE Connectivity has extensive Rugged Optic Harness capabilities. Please consult your local TE Sales representative for assistance.

Backpack with Reel

Reel with Stand
"Static Frame"

Backpack Harness

Accessories

Description	Reel Diameter	Part Number
Backpack	370 mm Dia. Reel	1754516-1*
Backpack	460 mm Dia. Reel	1754516-2*
Backpack	510 mm Dia. Reel	1754516-3*
Static Frame	500 mm Dia. Max	1754517-1*
Static Frame	700 mm Dia. Max	1754517-2*

* Reel must be ordered separately.
Note: For lower cost alternative options. Please contact your local TE Connectivity Sales Representative or TE Product Information Center at 1-800-522-6752.

Catalog 1308940
Revised 9-14

www.te.com

Dimensions are shown for reference purposes only. Specifications subject to change.

Dimensions are in millimeters unless otherwise specified.

USA: +1 800 522 6752
Asia Pacific: +86 0 400 820 6015
UK: +44 800 267 666

For additional support numbers please visit www.te.com

Tactical Optical Cable

Non-Metallic Tactical Field Deployable Fiber Optic Cable

Product Facts

- **All terrain field deployable cable, up to 4 fibers, singlemode or multimode**
- **Developed for deployment under the most demanding conditions**
- **Tight buffered fibers are protected by Aramid yarns and a tough ruggedized polyurethane sheath**
- **Tested in accordance with MIL-PRF-85045**
- **Flexible, water resistant, high crush resistant, and lightweight,**
- **Designs available to be resilient against radiation exposure**

Technical Data

Mil-Standard Distribution Cable — 2 Fiber Singlemode

Attenuation — ≤ 0.5 dB/km @ 1310 nm / ≤ 0.5 dB/km @ 1550 nm
Diameter — 5.8 mm
Weight — 25 kg/km
Minimum Bending Radius — 29 mm
Crush Resistance — 2000 N/cm
Operating Temperature — -55° C to +85° C

Mil-Standard Distribution Cable — 4 Fiber Singlemode

Attenuation — ≤ 0.5 dB/km @ 1310 nm / ≤ 0.5 dB/km @ 1550 nm
Diameter — 5.8 mm
Weight — 27 kg/km
Minimum Bending Radius — 28 mm
Crush Resistance — 2000 N/cm
Operating Temperature — -55° C to +85° C

Mil-Standard Distribution Cable — 2 Fiber Multimode

Fiber Type — 50 µm/125 µm and 62.5/125
Attenuation — ≤ 3.5 dB/km @ 850 nm / ≤ 1.0 dB/km @ 1300 (62.5/125); ≤ 3.5 dB/km @ 850 nm / ≤ 1.5 dB/km @ 1300 (50/125)

Mil-Standard Distribution Cable — 4 Fiber Multimode

Fiber Type — 50 µm/125 µm and 62.5/125
Attenuation — ≤ 3.5 dB/km @ 850 nm / ≤ 1.0 dB/km @ 1300 (62.5/125); ≤ 3.5 dB/km @ 850 nm / ≤ 1.5 dB/km @ 1300 (80/125)

Other fibers (i.e. Polyimide, Silicon buffer, Carbon coated, radiation hardened, etc.) are available upon request.

Contact TE Connectivity or your local TE Sales Representative for part numbers, pricing, and availability.

ARMOR-LIGHT Tactical Field Deployable Fiber Optic Cable for Extreme Environments (Metallic for Rodent Proof)

4-Color Optical Fiber Cable Specification for Armored Cable for Ruggedized Applications

Construction:

- **4-color coded fibers**
- **Fiber types 50/125/250 µm, 62.5/125/250 µm and 9/125/250 µm**
- **Stainless steel gel filled tube**
- **Stainless steel wire**
- **Jacket — Nylon, black**

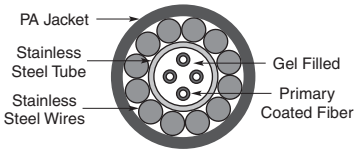

Fiber Type	Part Number	Outside Dia. (mm)	Weight kg/km	Max. Attenuation dB/km				Bandwidth MHz-km	
				850 nm	1300 nm	1310 nm	1550 nm	850 nm	1300 nm
62.5/125	1588957-1	3.8	24	3.5	1.0	X	X	160	500
50/125	1588957-2	3.8	24	2.7	0.9	X	X	400	1200
SM	1588957-4	3.8	24	X	X	0.40	0.25	X	X

Notes: 35 mm recommended bend radius.
3.1 kN breaking strength.

2-Color Optical Fiber Cable Specification for Armored Cable for Ruggedized Applications

Construction:

- **2-color coded fibers**
- **Fiber types 50/125/250 µm, 62.5/125/250 µm and 9/125/250 µm**
- **Stainless steel gel filled tube**
- **Stainless steel wire**
- **Jacket — Nylon, black**

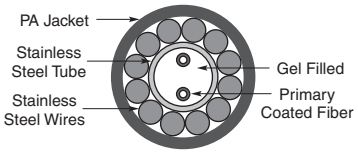

Fiber Type	Part Number	Outside Dia. (mm)	Weight kg/km	Max. Attenuation dB/km				Bandwidth MHz-km	
				850 nm	1300 nm	1310 nm	1550 nm	850 nm	1300 nm
62.5/125	1693808-1	3.8	24	3.5	1.0	X	X	160	500
50/125	1693808-2	3.8	24	2.7	0.9	X	X	400	1200
SM	1693808-4	3.8	24	X	X	0.40	0.25	X	X

Notes: 35 mm recommended bend radius.
3.1 kN breaking strength.

Note: All part numbers are RoHS compliant.

Dimensions are shown for reference purposes only. Specifications subject to change.

Dimensions are in millimeters unless otherwise specified.

USA: +1 800 522 6752
Asia Pacific: +86 0 400 820 6015
UK: +44 800 267 666

For additional support numbers please visit www.te.com

Commercial Fiber Optic Mechanical Splicing Kit

Light Crimp Splice

Part Number: 1985368-1

Product Facts

- **Terminates 250 micron coated, 900 micron tight-buffered fibers and 2.0 mm jacketed cable**
- **Attenuation (typical): ≤0.1dB**
- **Return Loss (at ambient; 18° to 28° C): ≥20 dB multimode ≥35 dB single-mode**
- **Operating Temperature: -25° to 70° C**
- **Storage Temperature: -40° to 85° C**
- **Tensile retention: 250 micron coated: 2.0 N 900 micron buffered: 3.0 N Jacketed: 50.0 N**

Part Number: 1516626-1

The KITCO 0831-8238 Kit Provides a low cost, highly reliable, solution for the repair of Tactical Fiber Optic Cables featuring the TE Connectivity Mechanical Splice. The Kit contains all of the tools and materials required to make (3) three four channel cable repairs, including the JPS-400 Splice Protection Sleeve. An Ideal solution in a tactical environment when system reliability is essential, not an option!

The TFOCA Military/ Commercial Fiber Optic Mechanical Splicing Kit contains the following items:

- 2 JPS-400 Splice Protection Sleeves
- 12 Mechanical Splices
- Light Crimp Splice
- Precision Cleaver
- Crimp Tool with Crimp Die
- Splice Holder with Strip Template
- Cleaning Materials
- Tool Roll with all Required Tools
- Support for LC/SC Light Crimp Connectors
- Lightweight, rugged Case

Part Number: 1516516-1

JPS Splice Enclosure

Part Number: 1516516-1

The JPS 400 Splice Enclosure is designed to protect TFOCA cable that has been repaired with any mechanical splice or fusion splicer. Designed & evaluated by the United States Marine Corps, this product works in all field applications, even in severe or harsh battlefield environments. Simple to install and easy to re-enter, yet flexible enough to conform to the diameter of a reel when re-wound. The JPS 400 is ideal for both TFOCA AND TFOCA Second Generation applications.

There are two high-grade brass retention assemblies that use both the jacket and the Aramid yarn found in TFOCA cable to provide strain relief & secure the fiber inside the waterproof housing. A waterproof compression gasket prevents water and other contaminants from entering the housing.

JPS 400 Mechanical Properties & Performance Specifications:

- High-grade formulated polyamide conduit & threaded adapters
- Self-extinguishing, low smoke, halogen & cadmium free
- Temperature Range: -50C to +105C continuous, 150C short term
- Chemical resistance to fuels, mineral oils, fats, and alkalies
- Specifically designed for external application in traction industry
- Size: 15” x .630” (ID) x .932” (OD)
- Re-enterable & Re-usable
- Conforms to TFOCA reel sizes
- Cable Size Range: .196”-.394”
- Pull Strength (Load Test): 250 lbs
- Waterproof

Ser Number	RFP Specification		Compliance to RFP specification YES/NO	In case of non-compliance deviation from RFP to be specified in unambiguous terms
(a)	Splicing Capability	For up to 1-4 splices SM & MM	Y	
(b)	Water Proofing Standard	IP64 class for the hard cover case	Y	
(c)	Tube Protection class	Better then IP67 (24 h @ 5000 mm)	IP68	
(d)	Time taken to repair a cable	Fast & reliable cable repair within 10 min - 30 min (1F , 4F)	Y	
(e)	Maximum Attenuation for Mechanical splices	Typical value < 0.2 db @ 1300 nm	Y	
(f)	Should be able to splice Armored/ Ruggedized cable (as offered by the vender)	Yes	Y	
(g)	Reusable components	100% reusable components (except mechanical splice protector)	Y	
(h)	Temperature range	Operating Temp:-10°C - 50°C Non-Operating Temp: -40°C 71°C		
(j)	Weight	< 4.2 kg	Do not have kit. TE has kit in India.	
(k)	Dimensions (max)	410x33x202mm	Do not have kit. TE has kit in India.	
(l)	Tensile load of cable after repair	No Change	250 lbs	

Catalog 1308940
Revised 9-14

www.te.com

Dimensions are shown for reference purposes only. Specifications subject to change.

Dimensions are in millimeters unless otherwise specified.

USA: +1 800 522 6752
Asia Pacific: +86 0 400 820 6015
UK: +44 800 267 666

For additional support numbers please visit www.te.com

Optical Test Set for Fiber Optic Cables

Designed for harsh environments

Product Facts

- Especially designed to support the installation of optical links in the field
- Able to test both cable drums and entire links
- Powered by batteries with high autonomy
- Suitable for diagnostics and construction teams
- Easy to use, ergonomic, rugged design
- Suitable for cable length up to 10 km
- Supports up to 4 fibers per cable with various types of connectors

Diagnostic Features

Power Meter

The optical power from any source can easily be measured with the power meter function.

Optical Source

A continuous optical signal is generated and transmitted with selectable output power.

Drum Test / Cable Test

Test of an entire cable drum with automatic good/bad indication. The test of an entire cable is realized with a 2nd KPG-opt or a loop connector.

Test Frames (optional)

The KPG-opt can generate specific test frames as used in optical networks and LOS systems.

Optical Tester

Description	Part Number
850 nm 38999 III Size 11 Optical Test Kit	1918016-1
850/1300 nm PRO BEAM Jr. Optical Test Kit	1918016-2
1310 nm PRO BEAM Jr. Optical Test Kit	1985006-1

For additional wavelength testers, contact your local TE Connectivity Sales Representative.

Protective Case
1918082-1

Note: All part numbers are RoHS compliant.

Dimensions are shown for reference purposes only. Specifications subject to change.

Dimensions are in millimeters unless otherwise specified.

USA: +1 800 522 6752
Asia Pacific: +86 0 400 820 6015
UK: +44 800 267 666

For additional support numbers please visit www.te.com

Fiber Optic Accessories

Hand Held Visual Fault Locator (VFL)

Product Facts

- **650 nm (visible) Class 2 1.0 mW max Diode Laser**
- **Continuous and flashing (2-3 Hz pulsed) modes**
- **Rugged rubber shell and body design modeled after a popular military connector**
- **Lanyard attached dust cover**
- **Standard 2.5 mm adapter for SC, ST, and FC connectors**
- **Optional 1.25 mm adapter for LC and MU connectors.**
- **Unique design allows adapter to permanently reside on VFL so it is not misplaced allowing user to choose 1.25 mm or 2.5 mm**
- **Uses 1 "AA" style battery for >30 hours of continuous use**
- **Soft-sided belt case for convenience and storage**

The TE Connectivity Hand Held Visual Fault Locator (VFL) is a rugged and affordable solution for identifying breaks and bending in optical fibers and cabling. Its powerful, red (650 nm) laser provides the ability to locate damaged, broken, or tightly bent fibers that cause undesirable attenuation in your system.

The jacket of the cable will glow red at the location of the fault. The FLASH button allows the user to toggle between continuous or pulsed mode. The compact, rugged, and balanced design is based upon a popular harsh environment fiber optic connector. The single "AA" style battery is good for >30 hours of continuous use and the soft-sided protective case with belt loop provides a convenient and protective means of storage.

Description	Part Number
Hand Held Visual Fault Locator	1828352-1
1.25 mm Adapter for Hand Held VFL	1828353-1
Includes Part Numbers 1828352-1 and 1828353-1	1828352-2

Applications

Affordable VFL Solution for:

- Identifying breaks, bends, and other damage in optical fibers
- Tracing fiber paths
- Identifying termination errors
- Continuity testing

Product Dimensions

Length — 18.5 cm [7.283 in]
Width — 2.2 cm [0.866 in]
Thickness — 2.2 cm [0.866 in]
Weight (w/battery) — 150 g [0.33 lb]

Catalog 1308940
Revised 9-14

www.te.com

Dimensions are shown for reference purposes only. Specifications subject to change.

Dimensions are in millimeters unless otherwise specified.

USA: +1 800 522 6752
Asia Pacific: +86 0 400 820 6015
UK: +44 800 267 666

For additional support numbers please visit www.te.com

Expanded Beam Avionics-Related Standards and Specifications

ARINC 600, 664, 763 and 801

ARINC 664 — Aircraft Data Network

TE Connectivity's ARINC Connectors with Mini Expanded Beam inserts will meet/exceed all 100 Base-FX Ethernet LAN applications

ARINC 763 — Avionics Network Server System — TE's ARINC 600 Connectors are designed to meet/exceed 100 Base-FX Ethernet LAN applications.

Network Server Unit (NSU) — can use ARINC 600 Size 1 connector with up to 8 Expanded Beam fiber optic channels (two Mini Expanded Beam inserts in cavity C)

Server Interface Unit (SIU) — can use ARINC 600 Size 3 connector with up to 16 Expanded Beam fiber optic channels (four Mini Expanded Beam inserts in cavity F)

Integrated Network Server Unit (INSU) — can use ARINC 600 Size 3 connector with up to 16 Expanded Beam fiber optic channels (four Mini Expanded Beam inserts in cavity F)

ARINC 801 — Fiber Optics Working Group

TE provides a single reference point for Flight Level Optics that are multi-sourced.

Typical Assemblies for In-Flight Network Applications

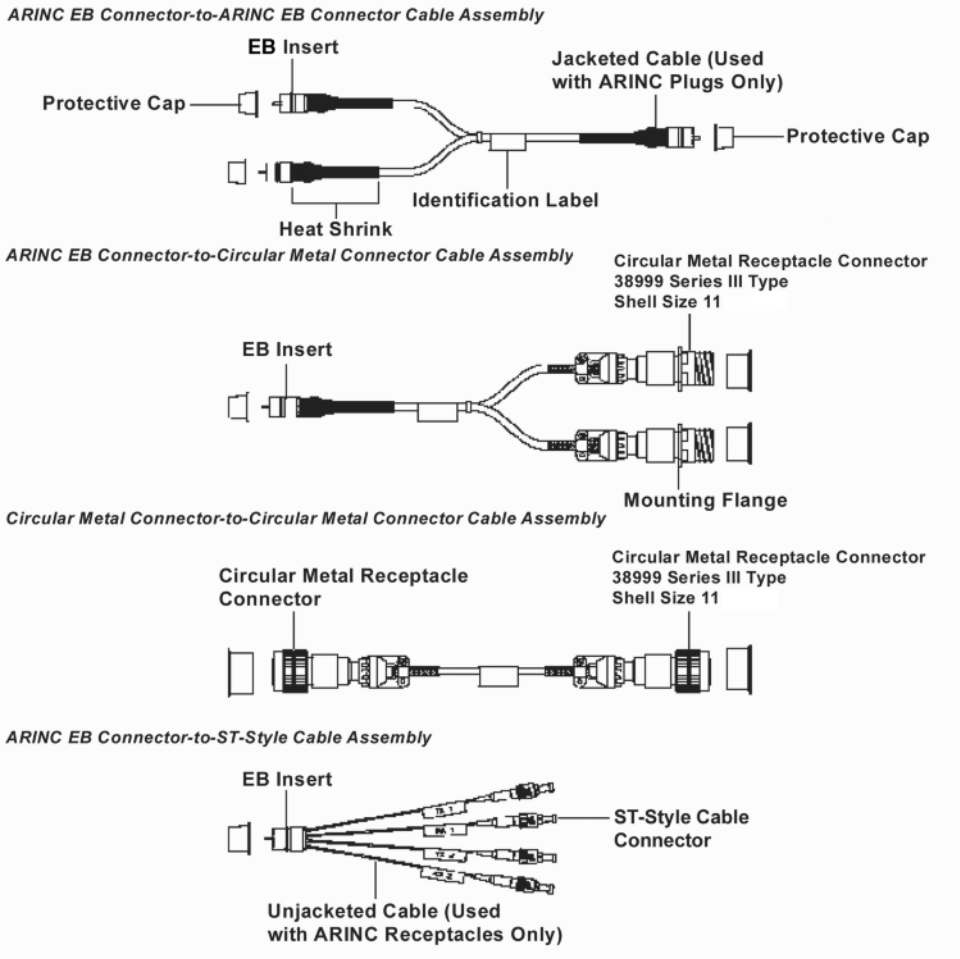

Typical Assemblies

ASSEMBLY CAPABILITIES
TE Connectivity has extensive Rugged Optic Harness capabilities. Please consult your local TE Sales representative for assistance.

Dimensions are shown for reference purposes only. Specifications subject to change.

Dimensions are in millimeters unless otherwise specified.

USA: +1 800 522 6752
Asia Pacific: +86 0 400 820 6015
UK: +44 800 267 666

For additional support numbers please visit www.te.com

ARINC 600 and 404

Product Facts

- For Mini Expanded Beam Inserts
- For use in 100 base-FX Ethernet LAN applications per ARINC 664 and ARINC 763
- Insert holders designed to ARINC 600, Supplement 13 or to specific customer needs for Mini Expanded Beam inserts
- Drop-In Insert Holders utilize Standard ARINC 600 Retainers
  - Hard Stop on Plug Side
  - Spring-Loaded Stop on Receptacle Side
  - Captive Hardware
- Facial Sealing — Optional
  - Bonded to Receptacle Block Mating Face
  - Raised Collar Seal around Optics Insert compresses against Chamfer on Plug Block Mating Face

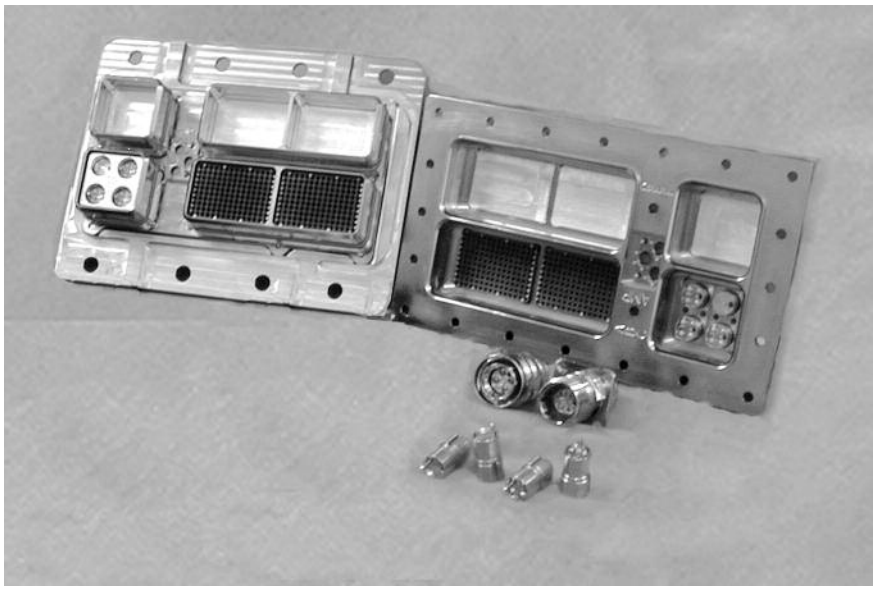

ARINC 600 Insert Holders for Mini-Expanded Beam Contacts

Size 1
Power Cavities

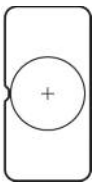

ARINC 600, 1 Position
1MP

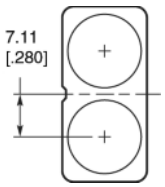

ARINC 600, 2 Position
2MP

Size 1
Signal Cavities

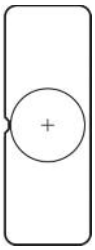

ARINC 600, 1 Position
1MS

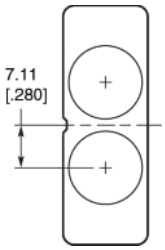

ARINC 600, 2 Position
2MS

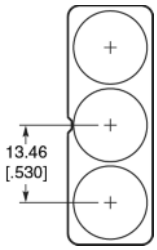

ARINC 600, 3 Position
3MS

ASSEMBLY CAPABILITIES
TE Connectivity has extensive Rugged Optic Harness capabilities. Please consult your local TE Sales representative for assistance.

See next page for Size 2 / 3 Power and Signal Cavities

Catalog 1308940
Revised 9-14

www.te.com

Dimensions are shown for reference purposes only. Specifications subject to change.

Dimensions are in millimeters unless otherwise specified.

USA: +1 800 522 6752
Asia Pacific: +86 0 400 820 6015
UK: +44 800 267 666

For additional support numbers please visit www.te.com

ARINC 600 and 404 (Continued)

Size 2 / 3 Power and Signal Cavities

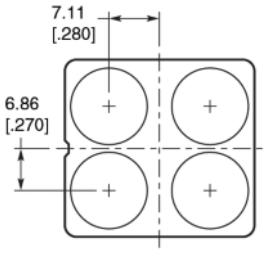

ARINC 600, 4 Position
4MP

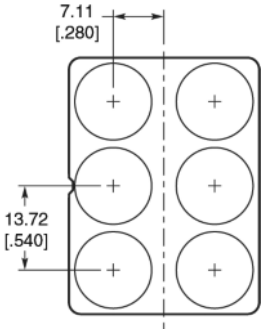

ARINC 600, 6 Position
6MS

Rack and Panel Mini Insert Kits

Description	Part Number
2 x 850 / 1300 nm Dual Multimode	1374759-3
2 x 1310 nm Singlemode	1588839-3
2 x 1550 nm Singlemode	1754622-3
4 x 850 / 1300 nm Dual Multimode	1374759-1
4 x 1310 nm Singlemode	1588839-1
4 x 1550 nm Singlemode	1754622-4

Ferrule Kits

Fiber Hole Size	Mode	PRO BEAM Connector	Part Number
125 µm	SM	Mini	1754700-1
126 µm	SM	Mini	1754700-2
126 µm	MM	Mini	1754699-1

ARINC 600 Insert Holders for Mini-Expanded Beam Contacts

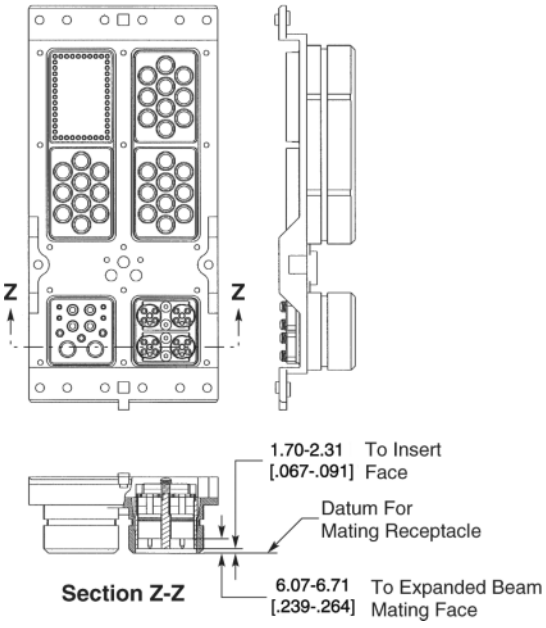

Typical Layout for Plug

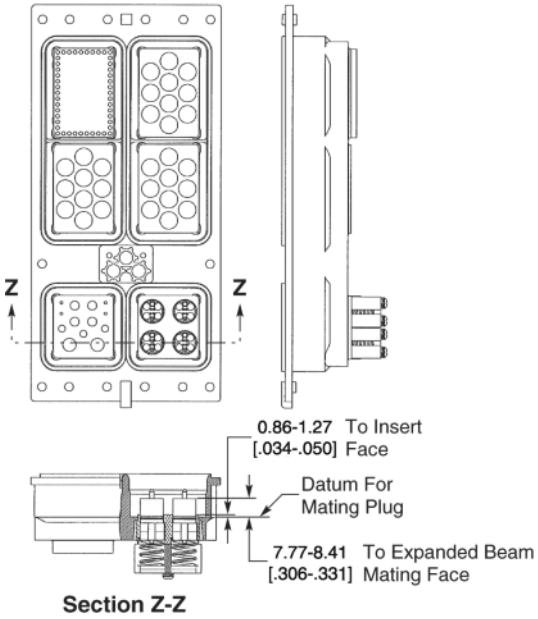

Typical Layout for Receptacle

Catalog 1308940
Revised 9-14

www.te.com

Dimensions are shown for reference purposes only. Specifications subject to change.

Dimensions are in millimeters unless otherwise specified.

USA: +1 800 522 6752
Asia Pacific: +86 0 400 820 6015
UK: +44 800 267 666

For additional support numbers please visit www.te.com

ARINC 600 and 404 (Continued)

M2 Mini-Expanded Beam Insert Holders for GPRB

Holder Kit, Pin (Spring-Loaded), Mini-Expanded Beam
Key A – GPRB– 1445162-1
Key B – GPRB– 2000189-1

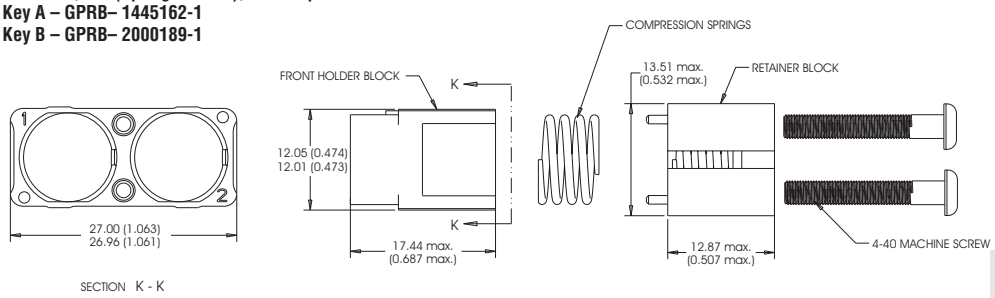

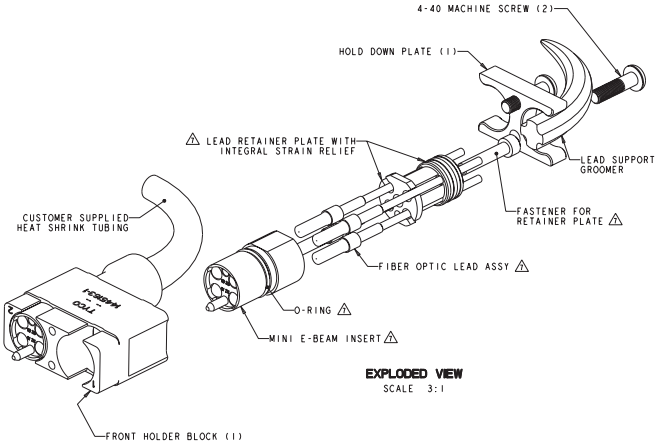

Holder Kit, Socket (Fixed), Mini-Expanded Beam,
Key A – GPRB –1445163-1
Key B – GPRB –2000190-1

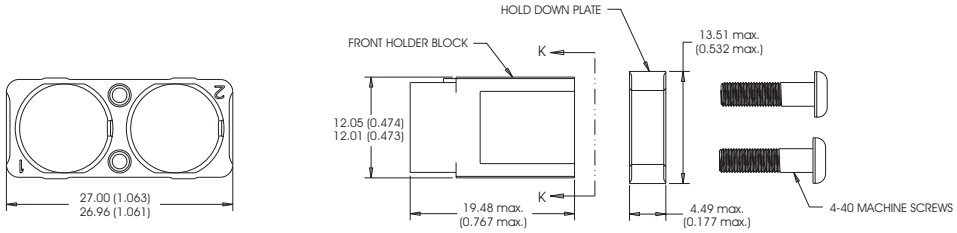

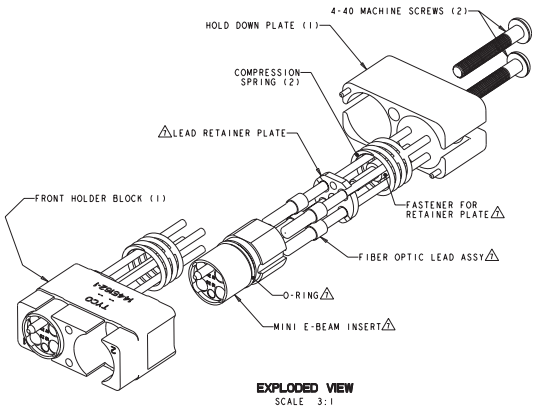

Dimensions are shown for reference purposes only. Specifications subject to change.

Dimensions are in millimeters unless otherwise specified.

USA: +1 800 522 6752
Asia Pacific: +86 0 400 820 6015
UK: +44 800 267 666

For additional support numbers please visit www.te.com

ARINC 600 and 404 (Continued)

Insert Kits for GPRB Holders

Rack and Panel Mini Insert Kits

Description	Part Number
2 x 850 / 1300 nm Dual Multimode	1374759-3
2 x 1310 nm Singlemode	1588839-3
2 x 1550 nm Singlemode	1754622-3
4 x 850 / 1300 nm Dual Multimode	1374759-1
4 x 1310 nm Singlemode	1588839-1
4 x 1550 nm Singlemode	1754622-4

Ferrule Kits

Fiber Hole Size	Mode	PRO BEAM Connector	Part Number
125 µm	SM	Mini	1754700-1
126 µm	SM	Mini	1754700-2
126 µm	MM	Mini	1754699-1

Comparative on Expanded Beam Inserts

Comparative on Expanded Beam Inserts' weight and Insertion Forces when applied to an ARINC housing

- ARINC 600 connector mated pair size 2 = 440 grams (without copper contacts)
- ARINC style Mini and Junior size Expanded Beam inserts = 5 pounds insertion force each when applied to the Rack and Panel ARINC Connector inserts
- Signal Cavity Optical Holder insert (i.e.: holds up to six mini inserts with four fiber ball lenses each or up to 24 fibers each insert set) = @ 30 grams
- Power Cavity Optical Holder insert (i.e.: holds up to four mini inserts with four fiber ball lenses each or up to 16 fibers each insert set) = @ 20 grams
- Insert mated pair PRO BEAM Jr. Connector insert set = @ 41.79 grams
- Insert mated pair Connector insert set = @ 16.17 grams
- Fiber = single fiber ≤ 4 kg / km
- Fiber = four fiber jacketed with a support member ≤ 24 kg / km
- Static spring force per mated Expanded Beam insert pair = 5 lbs.

Dimensions are shown for reference purposes only. Specifications subject to change.

Dimensions are in millimeters unless otherwise specified.

USA: +1 800 522 6752
Asia Pacific: +86 0 400 820 6015
UK: +44 800 267 666

For additional support numbers please visit www.te.com

Physical Contact & Technology

ARINC 801 Optical Termini

Product Facts

- **Optical termini for use with GPR, ARINC 600, circular MIL-DTL-38999 connectors.**
- **Industry Standard 1.25 mm ceramic ferrule**
- **Compatible with 1.5-2.2 mm Tight jacket and loose tube cable construction:**
  - **MT - Tight jacket cable**
  - **ML - Loose tube cable**
- **SM / MM versions**

Materials

Housings — Nickel Plated Copper
Ferrule — Zirconia
Spring — Stainless Steel
Crimp Sleeve — Nickel Plated Copper
Protective Cover — Silicone

Optical Performance

Singlemode, 1310 nm/1550 nm (UPC):
Attenuation, Mean — 0.15dB
Return Loss — > 50dB
Multimode, 850 nm/1310 nm:
Attenuation, Mean — 0.10dB
Return Loss — > 20dB

ASSEMBLY CAPABILITIES
TE Connectivity has extensive Rugged Optic Harness capabilities. Please consult your local TE Sales representative for assistance.

ARINC 801 Optical Termini

one common terminus for all types of connectors

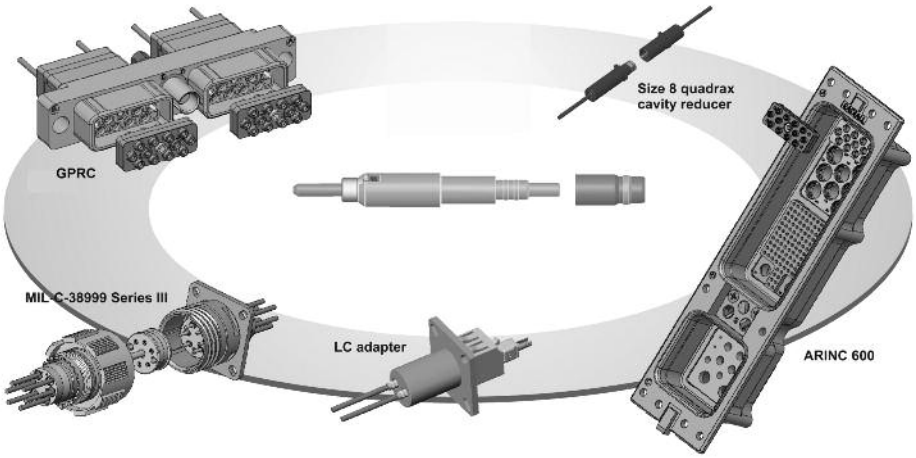

Mechanical / Environmental Performance

Test Description	Standard	ARINC 801 Optical Termini in GPR A & B Connector	ARINC 801 Optical Termini in 38999 Connector	ARINC 801 Optical Termini in ARINC 600 Connector
Thermal Shock	SAE-AS-13441 met 1003.1	-55C /+100C	-55C /+100C	-55C /+100C
Temperature Life	TIA/EIA 455-20A	500h @ +100C	500h @ +100C	500h @ +100C
Vibration	TIA/EIA 455-11	8h/axis 3.8g²/Hz 43 G rms	8h/axis 3.8g²/Hz 43 G rms	8h/axis 0.2g²/Hz 16.4 G rms
Shock	TIA/EIA 455-14A	300 G - 3ms	300 G - 3ms	50G - 11ms
Mate/Unmate (GPR/ARINC 600)	SAE-AS-13441 met 2016	100 Cycles	N/A	100 Cycles
Mate/Unmate (38999)	TIA/EIA 455-21A	N/A	500 Cycles	N/A
Maint. Aging	SAE-AS-13441 met 2002-1	10 Cycles	10 Cycles	10 Cycles
Salt Spray	SAE-AS-13441 met 1001.1 cond C	96 hr	500 hr	48 hr
Cable Ret. (1.8 mm)	SAE-AS-13441 met 2009-1	68N	68N	68N
Humidity (GPR/38999)	TIA/EIA 455-5 met B7A	10 cycles / 24h 90% RH -25C/+65C	10 cycles / 24h 90% RH -25C/+65C	N/A
Humidity (ARINC 600)	TIA/EIA 455-5 met B	N/A	N/A	10 cycles / 24h 90% RH -25C/+65C
Altitude Imm.	TIA/EIA 455-15	10,000 ft (69.6kPa)	10,000 ft (69.6kPa)	10,000 ft (69.6kPa)

Catalog 1308940
Revised 9-14
www.te.com

Dimensions are shown for reference purposes only. Specifications subject to change.

Dimensions are in millimeters unless otherwise specified.

USA: +1 800 522 6752
Asia Pacific: +86 0 400 820 6015
UK: +44 800 267 666

For additional support numbers please visit www.te.com

Physical Contact & Technology (Continued)

ARINC 801 Optical Termini
(Continued)

There are three types of ARINC 801 Optical Termini available dependent upon cable structure.

TE Connectivity has multiple connector types/families available for the ARINC 801 Optical Termini System.

These are:

- **General Purpose Rectangular Connectors**
  - **F5 & F12 Inserts**
- **MIL-DTL-38999 connectors**
  - **13-04, 15-06, 21-16**
- **ARINC 600**
  - **F12 combinations and F36**
- **Quadrax Cavity Reducers**
- **Motherboard & Daughtercard Solutions**

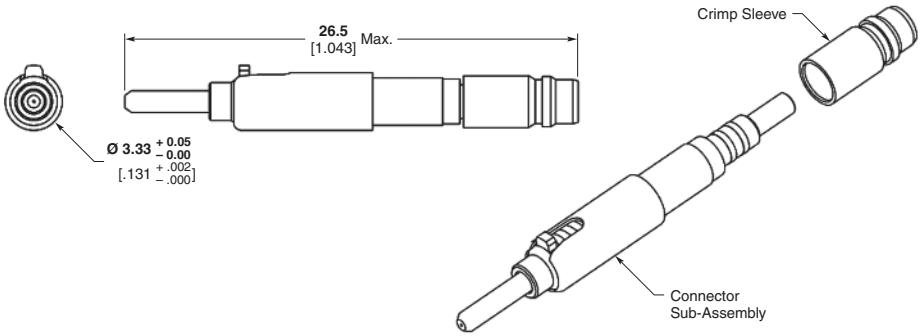

ARINC 801 Optical Termini Part Numbers

Cable Dia.	Cable Structure ML (loose & tight) MT (ultra tight)	S/M Fiber 125.3 µm PC/UPC	S/M Fiber 125.3 µm APC	M/M Fiber 128 µm PC
0.9mm Buffer	—	*	*	*
1.5 - 2.2 mm	ML	1918614-1	1918616-1	1828199-1
1.5 - 2.2 mm	MT	1918615-1	1918617-1	1828200-1

Consult your local TE Sales Representative for additional options.
* Contact TE for availability.

Accessories	Part Number
Dust Cap	1985335-1
100 Pc Bulk Pack	1985335-2

ARINC 801 Cavity Reducers

Size 8 Quadrax	Part Number	ARINC 801 Cavity Reducer
Pin Quadrax adapter for ARINC 801 Optical Termini in Quadrax FR type cavity	1757727-1	Quadrax cavity reducer (FR/FR) for receptacle shell
Pin Quadrax adapter for ARINC 801 Optical Termini in Quadrax RR type cavity	1757710-1	Quadrax cavity reducer (RR/RR) for receptacle shell
Socket Quadrax adapter for ARINC 801 Optical Termini in Quadrax RR type cavity	1757711-1	Quadrax cavity reducer (RR/RR) for plug shell

Connector Options:

For part numbers, details, and / or additional connector types and arrangements, contact your local TE Sales Representative.

Cable Structure

	Loose Structure	Tight Structure	Ultra Tight Structure
Movement between fiber & 900 µm buffer	Yes	No	No
Movement between 900 µm & cable jacket	Yes	Yes	No

Adapters

Type	Version	Alignment Sleeve	Part Number	Dim. (page 3-32)
ARINC 801 Optical Termini to ARINC 801 Optical Termini	Simplex Bulkhead Feedthrough Type	Ceramic Zirconia	1828996-1	Fig. 1
ARINC 801 Optical Termini to ARINC 801 Optical Termini	Simplex Straight	Ceramic Zirconia	1828997-1	Fig. 2
ARINC 801 Optical Termini to LC	Simplex LC Panel Cutout	Ceramic Zirconia	1828979-1	Fig. 3
ARINC 801 Optical Termini to LC	Duplex LC Panel Cutout	Ceramic Zirconia	1828980-1	Fig. 4
ARINC 801 Optical Termini to LC	Duplex MIL-DTL-38999 Panel Cutout	Ceramic Zirconia	1828995-1	Fig. 5

ASSEMBLY CAPABILITIES
TE Connectivity has extensive Rugged Optic Harness capabilities. Please consult your local TE Sales representative for assistance.

Tools

Description/Function	Part Number
Metal Extraction Tool (M81 969/1-03)	91066-3
Plastic Extraction Tool (M81 969/1403)	M81969/14-03
Daniels Right Angle Insertion Tool	DAK83-16*
Daniels Right Angle Removal Tool	DRK83-16*

* Contact Daniels Manufacturing Corporation

Note: All part numbers are RoHS compliant.

Dimensions are shown for reference purposes only. Specifications subject to change.

Dimensions are in millimeters unless otherwise specified.

USA: +1 800 522 6752
Asia Pacific: +86 0 400 820 6015
UK: +44 800 267 666

For additional support numbers please visit www.te.com

Physical Contact & Technology (Continued)

F12 ARINC 801 Insert Assemblies

Product Facts

- **ARINC 801 approved**
- **Optical termini for use with GPR, ARINC 600, circular MIL-DTL-38999 connectors**
- **Industry Standard 1.25 mm ceramic ferrule**
- **Compatible with 1.5-2.2 mm tight jacket and loose tube cable construction:**
  - **MT - Tight jacket cable**
  - **ML – Loose tube cable**
- **Singlemode (SM) and Multimode (MM) versions**
- **ARINC 801 Optical Termini part numbers:**
  1828199-1 MM/ML Version
  1828200-1 MM/MT Version
  1918614-1 SM/ML Version
  1918616-1 SM/ML Version-APC
  1918615-1 SM/MT Version
  1918617-1 SM/MT Version-APC

Materials:

Housings – Nickel Plated Copper
Ferrule – Zirconia
Spring – Stainless Steel
Crimp Sleeve – Nickel Plated Copper
Protective Cover – Silicone

Optical Performance

Singlemode, 1310 nm/1550 nm (UPC)
Attenuation, Mean – 0.15dB
Return Loss - >50dB
Multimode, 850 nm.1310 nm
Attenuation, Mean – 0.10dB
Return Loss - >20dB

Assembly Capabilities

TE Connectivity has extensive Rugged Optic Harness capabilities. Please consult your local TE Sales Representative for assistance.

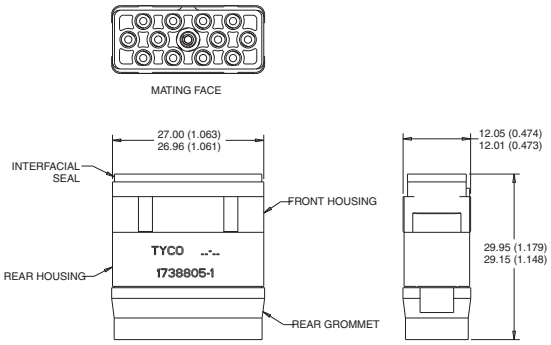

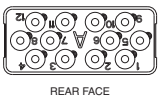

Insert Assembly, without Sleeve Holder, Environmental, F12
Key A 1738805-1
Key B 1738806-1

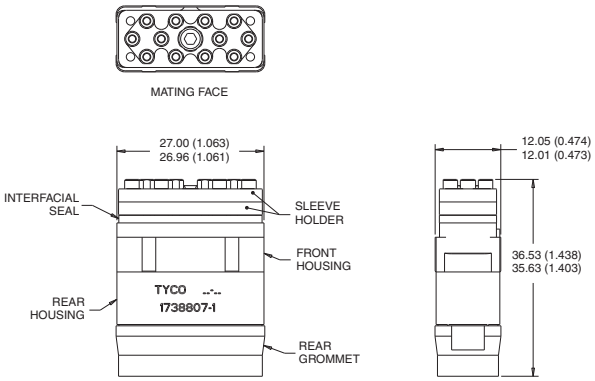

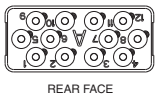

Insert Assembly, with Sleeve Holder, Environmental, F12, Key A GPRB
Key A 1738807-1
Key B 1738808-1

ARINC 801 Inserts

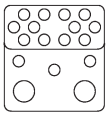

17F12Q2

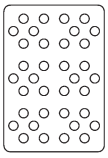

36F36

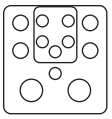

12F5C2

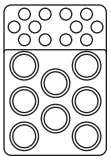

20F12Q8

ARINC 801 Inserts and Cavity Reducers accept ARINC 801 Optical Termini.

Note: All part numbers are RoHS compliant.

Catalog 1308940
Revised 9-14
www.te.com

Dimensions are shown for reference purposes only. Specifications subject to change.

Dimensions are in millimeters unless otherwise specified.

USA: +1 800 522 6752
Asia Pacific: +86 0 400 820 6015
UK: +44 800 267 666

For additional support numbers please visit www.te.com

Physical Contact & Technology (Continued)

ARINC 801 Optical Termini Adapter Dimensions

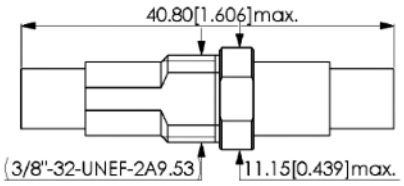

Terminus to Terminus Bulkhead Feedthrough
Figure 1

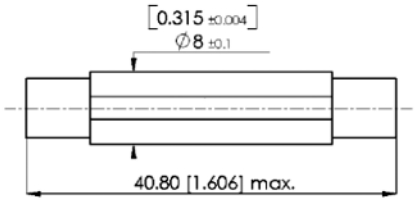

Terminus to Terminus Straight
Figure 2

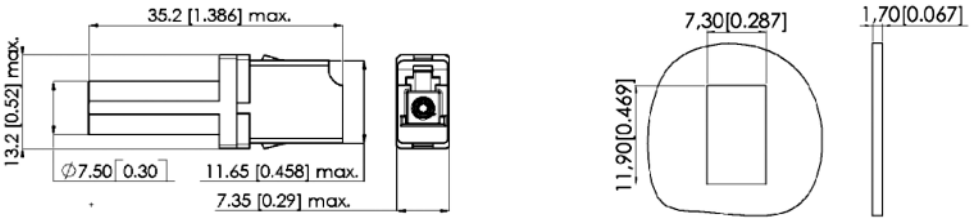

Terminus to LC Simplex
Figure 3

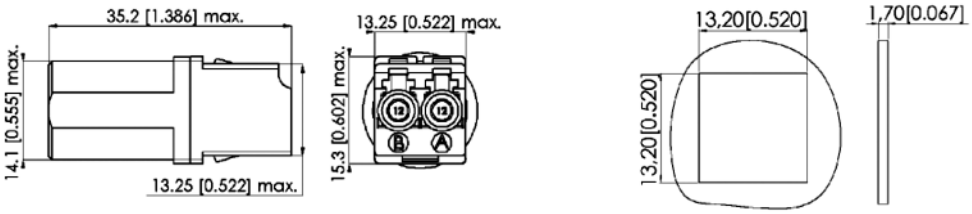

Terminus to LC Duplex, LC Panel
Figure 4

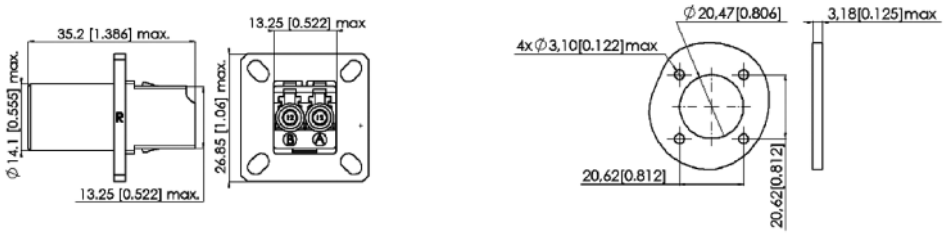

Terminus to LC Duplex, MIL-DTL-38999 Panel Cutout
Figure 5

Catalog 1308940
Revised 9-14

www.te.com

Dimensions are shown for reference purposes only. Specifications subject to change.

Dimensions are in millimeters unless otherwise specified.

USA: +1 800 522 6752
Asia Pacific: +86 0 400 820 6015
UK: +44 800 267 666

For additional support numbers please visit www.te.com

Physical Contact & Technology (Continued)

Most of the tools included in the Termination Kit are commonly used in the fiberoptic industry (strippers, cutting pliers and all accessories for fiber and cable preparation). The items in the table below are specially made for the ARINC 801 Optical Termini System. Their use is highly recommended to achieve mechanical and optical performances.

ARINC 801 Optical Termini Termination Kit

Part Number 1828644-X

Qty -2	Qty -1	Description	Part Number	Item #
1	1	Label, Termination Kit	1918887-1	28
1	1	Insertion and Extraction Tool	91066-3	27
2	2	1.25 mm Swab	1828355-1	26
1	1	LC Polishing Bushing	1754074-1	25
1	1	Polishing Plate	501197-1	24
1	1	Polishing Pad	501523-1	23
10	10	0.3 µm Polishing Film	228433-5	22
5	5	Fine Diamond Polishing Film	503887-1	21
10	10	5 µm Polishing Film	228433-8	20
15	15	9 µm Polishing Film	1374484-1	19
1	1	Cleave Tool	504064-1	18
1	—	Curing Oven Block	1918510-1	17
1	—	Curing oven	502130-1	16
1	1	Resin injector tips	1918509-2	15
1	1	Resin injector	1918509-1	14
5	5	Epoxy, 353ND	504035-1	13
10	10	Alcohol Fiber Wipe	501857-2	12
1	1	Inner Ferrule Shaping Tool	1918511-1	11
1	1	Hexagonal key	19840-5	10
1	1	Fiber Stripping tool (125 µm)	1754708-1	9
1	1	Handtool	58532-1	8
1	1	Die-set, ARINC 801 Optical Termini	1828889-1	7
1	1	KEVLAR Shears	1278637-1	6
1	1	Cable Jacket Strip Tool	1278531-1	5
1	—	1.25 mm Microscope Adapter	1754765-1	4
1	—	200x Microscope	1754767-1	3
1	—	Carrying case, Weekender	1918881-1	2
—	1	Carrying case, Attache	1918834-1	1

The following tools are necessary for product termination but are not included in the kit:
Alcohol, canned air, and clean cloth.
Other accessories available include ruler, tweezers, cleaning tip, roller adhesive tape, moss cable support and permanent ink markers.

ARINC 801 Optical Termini Service Tool Kit (Inspection, testing & cleaning) Part Number 1828335-1

ARINC 801 Optical Termini Service Tool Kit (Cleaning only) Part Number 1828335-2

ARINC 801 Optical Termini Service Tool Kit (Testing only) Part Number 1828335-3

ARINC 801 Optical Termini Service Tool Kit (Hand Held Digital Probe Kit) Part Number 1828335-4

Tool Kit Contents

Item #	Comp Part Number	Description	-1	-2	-3	-4
1	1278540-1	Soft Carry Bag	1	—	—	—
2	1754767-1	200x Microscope	1	—	—	—
3	1754765-1	LC Microscope adapter	1	—	—	—
4	6374613-5	LC - SC 50/125 cable assembly	2	—	—	—
5	6374615-5	LC - SC 62.5/125 cable assembly	2	—	—	—
6	1918808-1	1.25 mm swab	2	2	—	—
7	1918810-1	OPTIPOP C Card Cleaner	2	5	—	—
8	1828349-1	Optical Loss Test Set	1	—	1	—
9	1828350-1	OLTS 1.25 mm detector cap	1	—	1	—
10	1828352-1	Visual Fault Locator	1	—	1	—
11	1828353-1	VFL 1.25 mm Adapter	1	—	1	—
12	1828465-1	Label, Service Kit	1	—	1	—
13	1918222-1	Inspection, Hand Held Digital Probe Kit	—	—	—	1
14	1918223-1	1.25 mm Adapter, Digital Probe	—	—	—	1

-1 inspection, cleaning & testing
-2 cleaning
-3 testing
-4 Hand Held Digital Probe Kit

Note: All part numbers are RoHS compliant.

KEVLAR is a trademark of E.I. du Pont de Nemours and Company.

OPTIPOP is a trademark of NTT Advanced Technology Corporation.

Dimensions are shown for reference purposes only. Specifications subject to change.

Dimensions are in millimeters unless otherwise specified.

USA: +1 800 522 6752
Asia Pacific: +86 0 400 820 6015
UK: +44 800 267 666

For additional support numbers please visit www.te.com

Ruggedized Fiber Optic Products (Continued)

MIL-T-29504 Style Optical Connector Range

Product Facts

- **Manufactured to meet the requirements of MIL-T-29504/4 and 5**
- **Proven in both rotary and fixed-wing aerospace applications**
- **Sprung loaded socket contacts ensure consistent pressure and performance levels**

The range of MIL-T style optical contacts is designed specifically for use with the MIL-DTL-38999 Series III connectors within the standard size 16 cavity.

Optical Inserts for EN4165 and ARINC 809

Product Facts

- **Interchangeable modular inserts**
- **Easy use insertion / extraction tool**
- **Easy access to optical contacts for cleaning maintenance**
- **Compliments DMC-M multiway modular connector range**

TE has designed a comprehensive range of Fiber ptic inserts to further enhance our EN4165 connector range. To date the modular inserts can accommodate MC5, MC6 ribbon, Arinc 801 and EN4531 optical contacts.

Fiber Optical Insert for DMC-M

Product Facts

- **Light weight composite**
- **Colour coded**
- **Modularity**
- **Screw coupling**

An optical insert is available for the popular DMC-M connector which enables six standard MC5 contact to be incorporated into a single insert package or 12 way MC6 or 4 way Arinc 801 contacts.

RSC-v

Product Facts

- **Suitable for singlemode applications**
- **Good return loss measurements**
- **Tuneable PC variant for optimum performance**

APC version of the ever popular RSC connector range. The RSC-V is available with either an angled polish (APC) or a tuneable physical contact (PC) variant.

Catalog 1308940
Revised 9-14

www.te.com

Dimensions are shown for reference purposes only. Specifications subject to change.

Dimensions are in millimeters unless otherwise specified.

USA: +1 800 522 6752
Asia Pacific: +86 0 400 820 6015
UK: +44 800 267 666

For additional support numbers please visit www.te.com

Ruggedized Circular Connectors

38999

Product Facts

- **100% Scoop Proof**
- **High strength Aluminium shells**
- **Superior flourosilicone seals provide maximum tear resistance and sealing memory**
- **Threaded coupling with self locking for anti-vibration integrity**

Military circular connector qualified to MIL-DTL-38999, Series III for fiber optic MIL-T-29504 style termini. Rugged design offers maximum performance for shock and vibration, environmental, moisture and corrosion resistance and provides effective EMI shielding.

Catalog 1308940
Revised 9-14

www.te.com

Dimensions are shown for reference purposes only. Specifications subject to change.

Dimensions are in millimeters unless otherwise specified.

USA: +1 800 522 6752
Asia Pacific: +86 0 400 820 6015
UK: +44 800 267 666

For additional support numbers please visit www.te.com

MC3 MKII Fiber Optic Multiway Connectors

MC3 MKII Fiber Optic Multiway Connectors

Product Facts

- **Insert-to-insert keying assists precision alignment**
- **Individually rear insertable/ removable optical contacts enable easy assembly**
- **Backshells and adaptors available for most single and multifiber cable types**

General Specifications

Fiber type – Multi and Singlemode fiber Ranging from 5 to 200um core diameters

Channels – 5, 8 and 12 Optical channels

Cable size – 1.5 mm to 3.0 mm outer jacket

Materials

Shell – Aluminium; nickel plated
Aluminium; cadmium plate olive drab
Aluminium bronze (special order)

Contact body

Arcap – Titanium

Ferrule – Zirconia

Alignement sleeve – Zirconia

Seals – Fluorosilicone or nitrile

Plating – Aluminium, nickel plated
Aluminium, cadmium plate olive drab
Aluminium bronze (special order)

Optical Performance

Insertion loss - 0.25dB typical*

Return loss - 40dB typical*

Repeatability - Typically better than 0.1db with 50/125µm fiber

Environmental Specification

Temperature

High temperature endurance - +155°C*

Low temperature endurance - 65°C*

Durability - Greater than 500 mating cycles

Vibration

Sinusoidal - 5-3000Hz, 30g

Bump - 4000 bumps, 40g

The MC3 range of high performance connectors incorporates individual optical contacts inserted from the rear.

The removable socket insert allows for easy access to the optical faces to aid cleaning and maintenance.

The MC3 MkII range has the same removable alignment insert feature as the MC3 for easycleaning (which can be specified in either receptacle or plug), and is suitable for use with most single-mode and multimode optical fibres with core diameters from 5 to 200µm. 5, 8 and 12 optical channels are accommodated in the MIL-C-38999 Series III style connector shells. The MC3 MkII connector range has been tested and approved for use in severe environments.

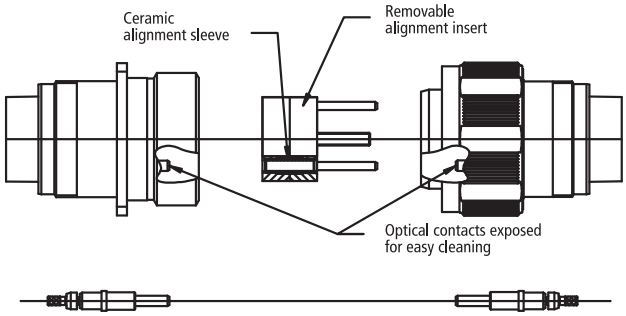

Identical sprung optical contacts in receptacle and plug connectors

Key Features

- Precision Zirconia ceramic ferrules and alignment sleeves ensure superior, repeatable optical performance with physical contact polishing techniques
- Insert-to-insert keying assists precision alignment
- Individually rear insertable/removable optical contacts enable easy assembly
- Easily removable alignment sleeve insert facilitates simple cleaning and maintenance
- Colored band indicates full mating
- Identical optical contacts are spring loaded in both plug and receptacle to maintain physical contact even under severe shock or vibration conditions (rigid contact option available for receptacle)
- Simple termination process and tooling
- Backshells and adaptors available for most single and multifiber cable types
- MIL-C-38999 Series III anti-vibration coupling mechanism and tri-start thread
- Alternative shell keyway orientations provide protection from inadvertent mis-mating
- Dynamic '0' ring seal between mating shells provides water submersion capability

*fiber and polishing process dependent

Catalog 1308940
Revised 9-14

www.te.com

Dimensions are shown for reference purposes only. Specifications subject to change.

Dimensions are in millimeters unless otherwise specified.

USA: +1 800 522 6752
Asia Pacific: +86 0 400 820 6015
UK: +44 800 267 666

For additional support numbers please visit www.te.com

MC3 MKII Fiber Optic Multiway Connectors (Continued)

Insert Arrangement

Size - Arrangement	A	B1	B2	C1	C2	D	Thread E	Thread F tri-start dimensions (inches)	ØG	ØH	ØJ	ØK	ØL
19-5	36.58	29.35	26.98	5	3.5	27.84	M28 x 1.0	1.250	37.92	27.7	35.4	36.92	29.46
23-8	42.98	34.92	31.75	6.23	4	33.84	M34 x 1.0	1.500	44.12	33.7	41.75	43.12	35.81
25-12	46.02	38.11	34.92	6.23	4	36.84	M37 x 1.0	1.625	47.35	36.7	44.93	46.35	38.99

Dimensional Information

All dimensions in inches (except threads). To complete part number for ordering see 'ordering information'

Plug

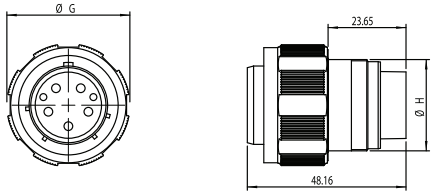

MC306E2

Procap

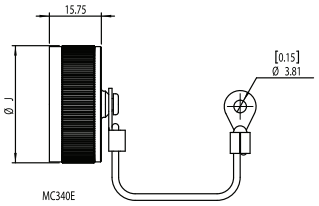

MC340E

Receptacle

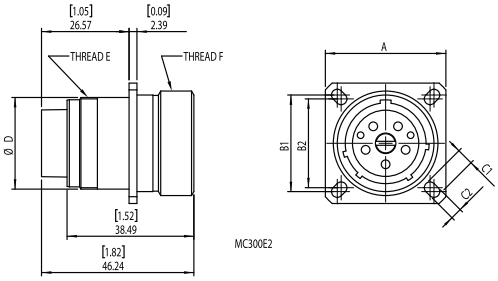

MC300E2

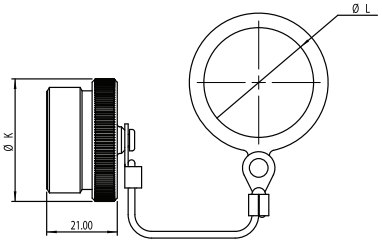

MC320E

Dummy Receptacle

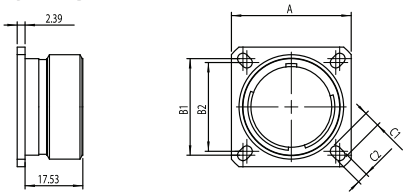

MC330E

MC3 MKII Fiber Optic Multiway Connectors (Continued)

Optical Contacts (ordered separately)

Optical contacts are supplied with a profile formed optical end face and are available for singlemode or multimode fibers. Contacts are available in either sprung or rigid versions, depending upon application (rigid contacts should be used in bulkhead receptacles only).

Rigid Type

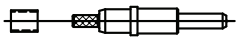

455494-***1-**2

Sprung Type

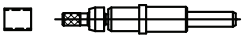

455500-***1-**2

Optical Contacts (ordered separately)
Options are as follows:
***1 Optical hole Ø 'A' fiber size (see table 1)
**2 Cable type (see table 2)

Please note: for type 00 (**2) the cable crimp sleeve is not supplied i.e. for terminating buffered fiber.

Table 1 (***1)

Rigid Contact		Sprung Contact	
Part number (multimode) 455***-***1-**2	Part number (singlemode) 455***-***1-**2	Part number (multimode) 455***-***1-**2	Part number (singlemode) 455***-***1-**2
455494-128-**2	455617-126-**2	455500-128-**2	455500-128-**2
455494-145-**2	455617-127-**2	455500-145-**2	455500-145-**2
455494-162-**2		455500-162-**2	
455494-176-**2		455500-176-**2	
455494-232-**2		455500-232-**2	
455494-283-**2		455500-283-**2	
455737-232-**2		455500-1MM-**2	
		455738-232-**2	

Table 2 (***2)

Contact Type		Cable Type			Crimp Dies (see note)	
Rigid	Sprung	Plain buffer	Tight jacket cable	Crimp Sleeve	Part number	A / F
455494-***1-00	455500-***1-00	900µm-	-	-	455608	1.64 / 1.74
455617-***1-00	455616-***1-00	900µm	-	-	455608	1.64 / 1.74
455494-***1-01	455500-***1-01	-	Ø2.5 OD	455610-01	455608	3.10 / 3.12
455617-***1-01	455616-***1-01	-	Ø2.5 OD	455610-01	455608	3.10 / 3.12
455494-***1-02	455500-***1-02	-	Ø1.8 OD	455610-02	455608	3.10 / 3.12
455617-***1-02	455616-***1-02	-	Ø1.8 OD	455610-02	455608	3.10 / 3.12
455494-***1-03	455500-***1-03	-	Ø3.0 OD	455610-03	455608	3.56 / 3.48
455617-***1-03	455616-***1-03	-	Ø3.0 OD	455610-03	455608	3.56 / 3.48
455494-***1-04	455500-***1-04	-	Ø2.1 OD	455610-04	455608	3.10 / 3.12
455617-***1-04	455616-***1-04	-	Ø2.1 OD	455610-04	455608	3.10 / 3.12
-	455500-1MM-00	-	Ø2.2 OD	-	455697	2.62 / 2.72
455737-***1-00	455738-***1-00	-	Ø1.5 OD	-	455478	2.27 / 2.37

Please note: for alternative sizes, please consult technical sales.

Cable Type / Description	Cable Ø O/D mm
Multiway cable, with 900µm buffered fiber and peripheral strain relief	3.5
	4.5
	5.0
	5.5
	6.0
	7.0
Multiway cable, various constructions - e.g. central strain relief	Backshells are available for a range of multiway cables, please consult technical sales

Please note: Crimp dies are used with crimp tool 451716 (Erma 29020).

Catalog 1308940
Revised 9-14

www.te.com

Dimensions are shown for reference purposes only. Specifications subject to change.

Dimensions are in millimeters unless otherwise specified.

USA: +1 800 522 6752
Asia Pacific: +86 0 400 820 6015
UK: +44 800 267 666

For additional support numbers please visit www.te.com

MC3 MKII Fiber Optic Multiway Connectors (Continued)

Ordering Information

MC3 **E * -* --** * * -F*****

Series:

Style:
00 = Bulkhead receptacle
06 = Plug
07 = Jam nut receptacle
20 = Protective plug
30 = Dummy receptacle
40 = Protective cap receptacle

MkII:
2 for 00 Bulkhead receptacle, 06 plug and 07 Jam nut Receptacle only. Otherwise omitted

Shell finish:
N = Nickel plated
C = Cadmium plated olive drab

Shell size - no. of channels:
19-5, 23-8, 25-12

Insert type
P, S (S type includes the removable alignment insert)

Shell orientation:
N, B, C, E, F and 'U' Universal

Modification code:

Example part numbers:
Connector MC300E2-N-19-5SN
Protective cap MC340E-N-19
Dummy receptacle MC330E-N-19

Accessories / Essential Tooling Information
For comprehensive tooling and consumable listing refer to technical sales.

Quality Approvals

- Civil Aviation Authority A8-1
- BS EN ISO 9001
- Military Spec Approvals 38999
- BS9000 and CECC
- Underwriters Laboratories
- BS EN IS09001:2000 (BSI)
- BS/EN 9100:2003 (BSI)
- AS9100 Rev B (BSI)
- AS9120:2002 (BSI)
- EASA Part 21 Subpart G (CAA)
- BS9000 (BSI)
- Underwriters Laboratories (UL)
- Military Spec Approvals 38999 (DSCC)

Catalog 1308940
Revised 9-14

www.te.com

Dimensions are shown for reference purposes only. Specifications subject to change.

Dimensions are in millimeters unless otherwise specified.

USA: +1 800 522 6752
Asia Pacific: +86 0 400 820 6015
UK: +44 800 267 666

For additional support numbers please visit www.te.com

MC4 Series - Duplex Fiber Optic Connectors

MC4 Series - Duplex Fiber Optic Connectors

Product Facts

- **Insert-to-insert keying assists precision alignment**
- **Individually rear insertable/ removable optical contacts enable easy assembly**
- **Backshells and adaptors available for most single and multifiber cable types**

The MC4 Duplex optical fiber connector is based upon shell size 9 Mil-C 38999 Series III making this an extremely compact environmentally sealed 2-way connector. The MC4 is suitable for use with most multimode and singlemode fibers with core diameters of 9 to 200µm. Simplex and duplex constructions can be accommodated with suitable connector backshells.

Precision ceramic ferrules and alignment sleeves ensure optical performance and reliability over an extended service life.

The optical ferrules are sprung loaded in both the plug and receptacle shells.

This provides an axial load equalization ensuring that butt joint contact is maintained even when the connector is subjected to vibration levels in excess of 30g.

This coupling nut is built in antivibration clicker mechanism to prevent inadvertent uncoupling under adverse vibration conditions.

General Specifications

Optical

Attenuation – Less than 0-4dB (50/125pm)

Repeatability – Better than 0.2dB

Fiber types – 50, 62.5, 85/125pm 100/140pm 200/280pm

Cable types

Tight jacket 2.5mm dia

Duplex 4.5mm OD

For other cable sizes consult Technical Sales

Materials

Shell - Aluminium alloy. Nickel plated

Ferrule - Zirconia Alignment sleeve: Zirconia

Seals - Fluorosilicone

Backshells - Aluminium alloy. Nickel plated Mechanical

Temperature range -+65°C to +155°C*

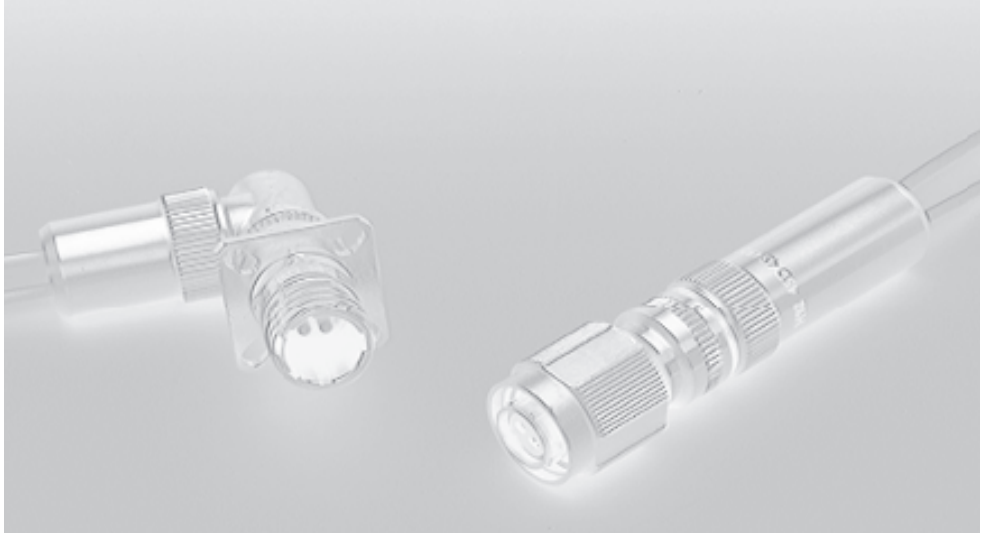

Quality Approvals

- Civil Aviation Authority A8-1
- BS EN ISO 9001
- Military Spec Approvals 38999
- Underwriters Laboratories (UL)

Backplane Module - PN 2000973-1

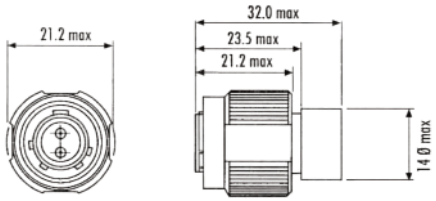

Daughtercard Module - PN 2000974-1

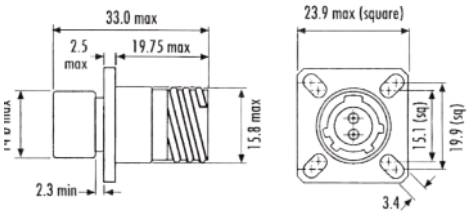

*Cable and epoxy dependant
Mechanical endurance: Not less than 500 matings

Catalog 1308940
Revised 9-14

www.te.com

Dimensions are shown for reference purposes only. Specifications subject to change.

Dimensions are in millimeters unless otherwise specified.

USA: +1 800 522 6752
Asia Pacific: +86 0 400 820 6015
UK: +44 800 267 666

For additional support numbers please visit www.te.com

MC4 Series - Duplex Fiber Optic Connectors (Continued)

Ordering Information

MC4 **E- * -09-2 * * -***

Series:

Style:
00 = Bulkhead receptacle
06 = Plug
07 = Jam nut

Shell finish:
N = Nickel plated
C = Cadmium plated olive drab

Shell size - no. of channels – 09-2

Insert type – P Pin, S Socket

Shell orientation – N, A, B, C, D, E

Modification code

Example part number:Bulkhead Receptacle MC400E-C-09-2SN, Plug MC406E-C-09-2PN

MC4 Essential Tooling

Part No.	Description and Use	Notes
	Connector Assembly Tooling	
454335	Fiber stripping tool	Hozan
453228	Fiber cleaving tool	
454342	Crimp tool	
	Polishing Tools and Materials	
454899	Polishing jig	
454539	Rubber pads	2 required
454539	Lapping film set comprises:	
454481	Coarse disk (10 off)	available separately
454482	DR diamond disc	available separately
454483	DM diamond disc	available separately
454484	Polishing disc (10 off)	
	Consumable Materials	
454257	Epoxy kit (353ND)	
450490	Spatula	
454297	Syringe (x6)	
	Ferrules	
454900-126	Fiber size 125pm	not supplied with connector
454900-141	Fiber size 140pm	not supplied with connector
454900-145	Fiber size 140pm	not supplied with connector
454900-283	Fiber size 280pm	not supplied with connector

Note: Additional tooling may be required specific to cable types (consult technical sales)
For comprehensive tooling and consumable listing refer to technical sales

Catalog 1308940
Revised 9-14

www.te.com

Dimensions are shown for reference purposes only. Specifications subject to change.

Dimensions are in millimeters unless otherwise specified.

USA: +1 800 522 6752
Asia Pacific: +86 0 400 820 6015
UK: +44 800 267 666

For additional support numbers please visit www.te.com

MC5 - High Density Fiber Optic Multiway

MC5 - High Density Fiber Optic Multiway

Product Facts

- **Insert-to-insert keying assists precision alignment**
- **Individually rear insertable/ removable optical contacts enable easy assembly**
- **Backshells and adaptors available for most single and multifiber cable types**

General Specifications

Fiber type – Suitable for fibres with core diameters 5-200um

Channels – 2, 4, 6, 8, 10, 18, and 30 channels

Cable size – 1.8 mm, 2.1 mm and 2.5 mm jacket

Materials

Shell – Composite (qualified to MIL-C-38999)

Contact body – Arcap

Ferrule – Zirconia

Alignement sleeve – Zirconia

Seals – Fluorosilicone

Plating – Nickel plate

Optical Performance

Insertion loss - 0.25dB typical*

Return loss -40 dB typical

Repeatability - Typically better than 0.1dB (with 50/125µm fiber)

Environmental Specification

Temperature

High temperature endurance - +150°C, 760 hours

Low temperature endurance -65°C, 500 hours

Durability - >1500 mating cycles

Vibration

Sinusoidal - 5-3000Hz, 40g, 10 hours

Random - 25-2000Hz, 5g2/Hz (50g rms), 16 hrs

The MC5 high density range is the very latest advance in high performance multi-channel fiber optic connectors, capable of sustained performance over a wide range of environmental conditions. The MC5 uses the most recent developments in precision ceramic ferrules and lightweight MIL-C-38999 Series III connector shell materials, combined with purpose designed inserts to ensure the optical performance meets the requirements of high reliability optical systems. Compact sprung loaded, precision optical contacts are individually insertable / removable for ease of assembly.Extensive testing has confirmed excellent performance under the most demanding environmental conditions with the MC5 chosen as the standard multiway fiber optic connector for the European Fighter Aircraft, Typhoon.

Key Features

- Compact 1.25mm precision zirconia ceramic ferrules
- Alignment sleeves ensure superior, repeatable optical performance with physical contact polishing techniques
- Purpose designed inserts, and insert-to-insert keying assist precision alignment
- Individually rear insertable / removable optical contacts enable easy assembly and maintenance
- Easily removable alignment sleeve insert facilitates simple cleaning and maintenance
- Color band indicates full mate condition
- Identical optical contacts are spring loaded in both plug and receptacle to maintain physical contact even under severe shock or vibration conditions (rigid contact option available for receptacle)
- Simple termination process and tooling
- Composite lightweight, high strength, corrosion resistant connector shells
- MIL-C-38999 Series III anti-vibration coupling mechanism, and tri-start thread
- Extensive range including 1,2,4,6,8,10 and 30 way connectors
- Available in both plug socket / receptacle pin and plug pin / receptacle socket configurations

*fiber and polishing process dependent

Dimensions are shown for reference purposes only. Specifications subject to change.

Dimensions are in millimeters unless otherwise specified.

USA: +1 800 522 6752
Asia Pacific: +86 0 400 820 6015
UK: +44 800 267 666

For additional support numbers please visit www.te.com

MC5 - High Density Fiber Optic Multiway (Continued)

Dimensional Information

All dimensions in inches (except threads). To complete part number for ordering see 'ordering information'.

Plug

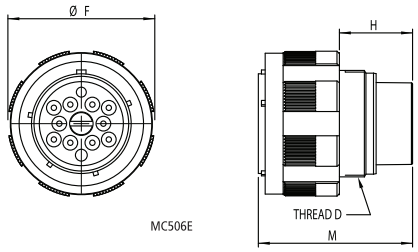

Procap

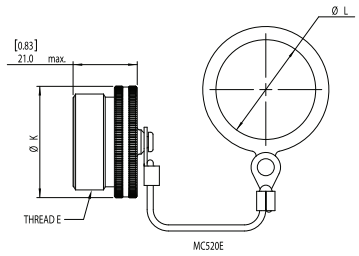

Receptacle

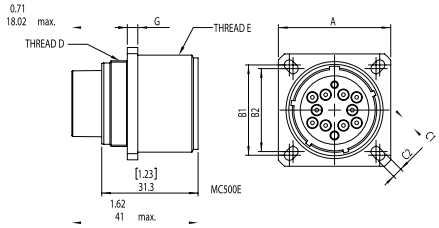

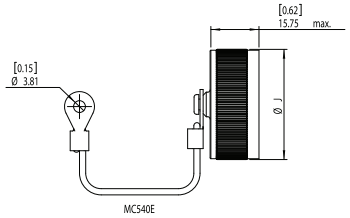

Dummy Receptacle

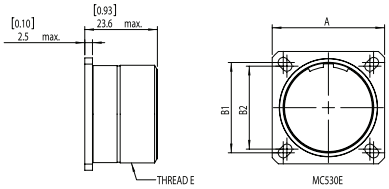

Dimensional Information (cont)

Size - Arrangement	A Max	B1	B2	C1 Min	C2 Min	Thread D	Thread E tri-start dimensions (inches)	ØF Max	G Max	H Max	M Max	ØJ Max	ØK Max	ØL Min
11-2	26.4	20.62	18.26	4.84	3.16	M15 X 1.0	0.75000	24.94	3.52	19.9	40.86	N/D	N/D	16.51
13-4	28.81	23.01	20.62	4.84	3.16	M18 X 1.0	0.8750	29.34	3.52	19.9	40.86	26.06	27.56	19.56
15-6	31.2	24.61	23.01	4.31	3.16	M22 X 1.0	1.0000	32.46	3.52	19.9	40.86	N/D	N/D	22.86
17-8	33.51	26.97	24.61	4.84	3.16	M25 X 1.0	1.1875	35.66	3.52	19.9	40.86	34.16	35.46	26.04
19-10	36.71	29.36	26.97	4.84	3.16	M28 X 1.0	1.2500	38.46	3.52	19.7	40.86	35.66	37.16	29.21
21-18	39.91	31.75	29.36	4.84	3.16	M31 X 1.0	1.3750	41.66	4.33	19.7	40.86	N/D	N/D	32.39
23-24	43.11	34.93	31.75	6.06	3.83	M34 X 1.0	1.5000	44.86	4.33	19.7	40.86	42.06	43.36	35.56
25-30	46.21	38.1	34.93	6.06	3.83	M37 X 1.0	1.6250	47.98	4.33	19.7	40.86	45.16	46.6	38.74

Catalog 1308940
Revised 9-14

www.te.com

Dimensions are shown for reference purposes only. Specifications subject to change.

Dimensions are in millimeters unless otherwise specified.

USA: +1 800 522 6752
Asia Pacific: +86 0 400 820 6015
UK: +44 800 267 666

For additional support numbers please visit www.te.com

MC5 - High Density Fiber Optic Multiway

MC5 Optical Termini (ordered separately)

Optical contacts are supplied with a profile formed optical end face and are available for singlemode or multimode fibers. Contacts are available in either sprung or rigid versions, depending upon application (rigid contacts should be used in bulkhead receptacles only).

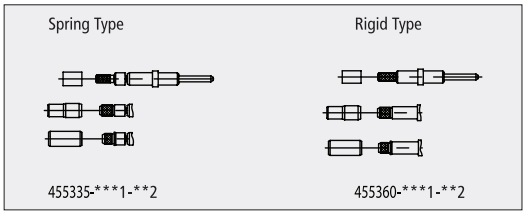

Options are as follows:
***1 = Optical hole Ø 'A' (fiber size) (see table 1) **2 = Cable type (see table 2)

Please note: for type 00 (**2) the cable crimp sleeve is not supplied i.e. for terminating buffered fiber.

Table 1 (***1)

Sprung contact part number	Rigid contact part number
455335-***1-**2	455360-***1-**2
455335-125-**2	455360-125-**2
455335-126-**2	455360-126-**2
455335-127-**2	455360-127-**2
455335-128-**2	455360-128-**2
455335-144-**2	455360-144-**2
455335-159-**2	455360-159-**2
455335-172-**2	455360-172-**2
455335-175-**2	455360-175-**2

Table 2 (***2)

Contact		Contact		Crimp Dies (see note)	
Sprung	Rigid	Plain buffer	Tight jacket cable	Part number	A / F
455335-***1-00	455360-***1-00	900µm	-	457440	1.25 / 1.35
455335-***1-01	455360-***1-01	-	Ø2.1 OD	457440	2.27 / 2.37
455335-***1-02	455360-***1-02	-	Ø1.8 OD	457440	2.62 / 2.52 and 2.37 / 2.27
455335-***1-0	455360-***1-03	-	Ø2.5 OD	457440	2.74 / 2.84

Please note: for alternative sizes, consult technical sales.

MC5 Backshells for Multiway Cables (ordered separately)

Cable Type / Description	Cable Ø O/D mm
Multiway cable, with 900µm buffered fiber and peripheral strain relief	3.5
	4.5
	5.0
	5.5
	6.0
	7.0
Multiway cable, various constructions - e.g. central strain relief	Backshells are available for a range of multiway cables, please consult technical sales

Please note: Crimp dies are used with crimp tool 451716 (Erma 29020).

Dimensions are shown for reference purposes only. Specifications subject to change.

Dimensions are in millimeters unless otherwise specified.

USA: +1 800 522 6752
Asia Pacific: +86 0 400 820 6015
UK: +44 800 267 666

For additional support numbers please visit www.te.com

MC5 - High Density Fiber Optic Multiway (Continued)

Ordering Information

MC5 **E- *- **-** * * -F***

Series:

Style:
00 = Bulkhead receptacle
06 = Plug
07 = Jam nut
20 = Protective cap plug
30 = Dummy receptacle
40 = Protective receptacle

Shell finish:
N Nickel plated

Shell size - no. of channels:
11-2, 13-4, 15-6, 17-8, 19-10, 21-18, 23-24, 25-30

Insert type
P, S (S type includes the removable alignment insert)

Shell orientation:
N, A, B, C

Modification code:

Example part numbers:
Connector MC500E-N-17-8SN
Protective cap MC540E-N-17
Dummy receptacle MC530E-N-17

Accessories / Essential Tooling Information
MC5 Fiber Optic Module for DMC-M Connectors

The MC5 DMC-M high performance fiber optic modules are manufactured from a high performance material for corrosion resistance and features a rugged construction. The common MC5 optical contact is rigid or sprung loaded and common to both plug and receptacle to maintain physical contact even under severe shock or vibration.

Quality Approvals

- Civil Aviation Authority A8-1
- BS EN ISO 9001
- Military Spec Approvals 38999
- BS9000 and CECC
- Underwriters Laboratories
- BS EN IS09001:2000 (BSI)
- BS/EN 9100:2003 (BSI)
- AS9100 Rev B (BSI)
- AS9120:2002 (BSI)
- EASA Part 21 Subpart G (CAA)
- BS9000 (BSI)
- Underwriters Laboratories (UL)
- Military Spec Approvals 38999 (DSCC)

Catalog 1308940
Revised 9-14

www.te.com

Dimensions are shown for reference purposes only. Specifications subject to change.

Dimensions are in millimeters unless otherwise specified.

USA: +1 800 522 6752
Asia Pacific: +86 0 400 820 6015
UK: +44 800 267 666

For additional support numbers please visit www.te.com

MC6 - Fiber Optic Ribbon Cable Connector

MC6 - Fiber Optic Ribbon Cable Connector

Product Facts

- **Insert-to-insert keying assists precision alignment**
- **Individually rear insertable/ removable optical contacts enable easy assembly**
- **Backshells and adaptors available for most single and multifiber cable types**

Fiber Type:

Channels – 2 to 72

Cable size – Telecom grade cable
Aerospace grade cable

Materials

Shell – Composite (MIL-C-38999)

Contact body – Nickel/cadmium plated composite polymer

Ferrule – Thermoplastic

Alignment Pin:

Seals – Fluorosilicone

Plating – Nickel

The MC6 high density, fiber optic connector series is now further enhanced with the option for industry standard MT Ferrule inserts. The insert accommodates 2 to 72 channels and can be supplied pre-terminated if required.The MC6 uses the compact MIL-C-38999 Series III, shell size 11 body, also used on the proven MC5 connector. It has a lightweight, corrosion resistant, metal-plated composite shell which provides high strength and durability, combined with EMC shielding. The result is a very compact, rugged, environmentally sealed solution for a wide range of applications, such as avionics, data bus and in-flight entertainment systems.

Key Features

- Common contact single or multimode MT ferrules MIL-C-38999 Series III anti-vibration coupling with tri-start thread
- Easily accessible Angled Physical Contact (APC) and Physical Contact (PC) faces for cleaning and maintenance
- Rear release contact using size 8 extraction tools Retrofit triple rear seal available
- Color band indicating full mating
- The use of industry standard MT interface and a variety of housing options ensures integration into new and existing systems
- Interchangeable with MIL-C-38999 Series III

Catalog 1308940
Revised 9-14

www.te.com

Dimensions are shown for reference purposes only. Specifications subject to change.

Dimensions are in millimeters unless otherwise specified.

USA: +1 800 522 6752
Asia Pacific: +86 0 400 820 6015
UK: +44 800 267 666

For additional support numbers please visit www.te.com

MC6 - Fiber Optic Ribbon Cable Connector (Continued)

Optical Performance

For more information contact technical sales on +44 (0) 1424 858358 or fiber@deutsch.net

Dimensional Information

All dimensions in millimeters unless otherwise stated. To complete part number for ordering see Ordering Information.

MC6 Receptacle

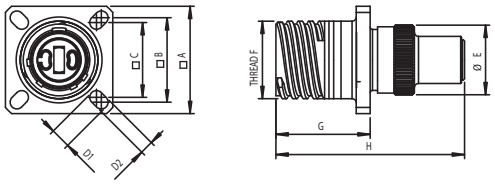

Protective Cap Receptacle MC640E-N-11

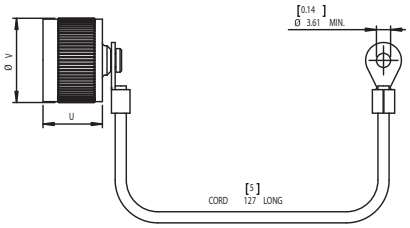

MC6 Plug

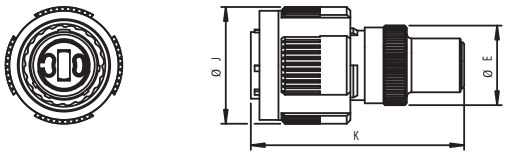

Procap Plug MC620E-N-11

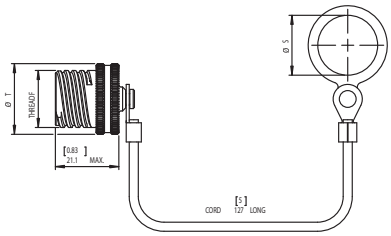

Jam Nut

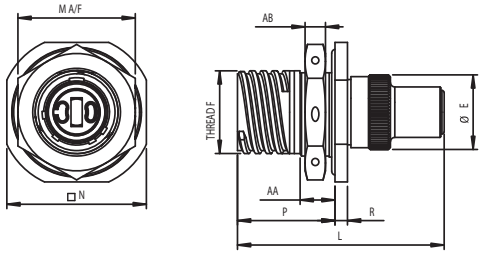

Protective Cap Receptacle

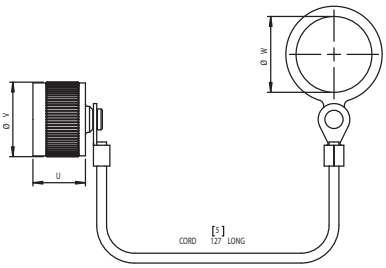

Dummy Receptacle MC630E-N-11

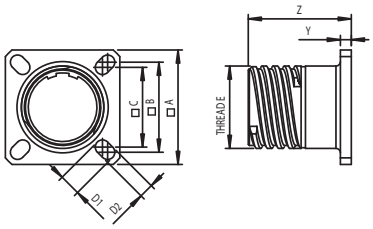

Dimensions are shown for reference purposes only. Specifications subject to change.

Dimensions are in millimeters unless otherwise specified.

USA: +1 800 522 6752
Asia Pacific: +86 0 400 820 6015
UK: +44 800 267 666

For additional support numbers please visit www.te.com

MC6 - Fiber Optic Ribbon Cable Connector (Continued)

Contact and Tooling Information

A Max	B Nom	C Nom	D1 Min	D2 Min	ØE Max	Thread F Tri-start (inches)	G Max	H Max	ØJ Max	K Max	L Max
26.40	20.62	18.26	4.84	3.16	17.10	0.7500”	23.20	46.50	24.95	46.00	47.50

M A/F	N Max	P Max	R Max	ØS Min	ØT Max	U Max	ØV Max	ØW Min	ØX Max	Y Max	Z Max	AA Max	AB Max
27	32.00	22.30	2.96	19.55	23.46	16.16	22.96	22.86	8.01	2.76	23.76	7.80	4.81

Ordering Information

MC6 **E -* -11- ** * -F**

Series:

Style:
00 = Bulkhead receptacle
06 = Plug
07 = Jam nut

Shell finish:
N Nickel plated
C = Cadmium plated

Modifaction code:
See above

Shell orientation:
N,A,B,C

No. of MT Ferrules:
01 for size 11

Shell size:
11

Optical Termini

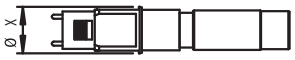

MC6 MT contact

MC6 - 12 SM - 01- P

Contact type

No. Chanels

Ferrule Type
SM - Singlemode
MM - Multimode

Ferrule Type
P - Pin (With Pins)
S - Socket (No Pins)

See Table

Cable Types Ref. Table		
Part No.	Cable	
	Description	Jacket Size
MC6 - ** ** - 01*	Ruggedized Aerospace Oval Multi Fiber Cable	3.95mm x 1.60mm Max.
MC6 - ** ** - 02*	Round Multi Fiber Cable	Ø3.96mm Max.

Accessories / Essential Tooling Information

MC6 Fiber Optic Module for DMC-M Connectors

The MC6 DMC-M high performance fiber optic modules are manufactured from a high performance material for corrosion resistance and features a rugged construction. The common MC6 optical contact is rigid or sprung loaded and common to both plug and receptacle to maintain physical contact even under severe shock or vibration.

Quality Approvals

- Civil Aviation Authority A8-1
- BS EN ISO 9001
- Military Spec Approvals 38999
- BS9000 and CECC
- Underwriters Laboratories
- BS EN ISO9001:2000 (BSI)
- BS/EN 9100:2003 (BSI)
- AS9100 Rev B (BSI)
- AS9120:2002 (BSI)
- EASA Part 21 Subpart G (CAA)
- BS9000 (BSI)
- Underwriters Laboratories (UL)
- Military Spec Approvals 38999 (DSCC).

Dimensions are shown for reference purposes only. Specifications subject to change.

Dimensions are in millimeters unless otherwise specified.

USA: +1 800 522 6752
Asia Pacific: +86 0 400 820 6015
UK: +44 800 267 666

For additional support numbers please visit www.te.com

MC801 Connector

MC801 Connector

Product Facts

- **Uses precision ARINC 801 fiber optic termini (typical multi-mode insertion loss is less than 0.15 dB).**
- **Removable alignment sleeve insert for easy cleaning of fiber optic termini**
- **Three stages of alignment: shell-to-shell keys, guide pins and ceramic alignment sleeves**
- **Includes all of the features of standard D38999 straight plug and panel mount receptacle shells**
- **Scoop-proof connector design**
- **Option for alternate keys and keyways**

Insert Arrangements

11-02 13-04 15-06 17-08

19-12 21-16 23-24 25-32

Materials

Composite and Aluminium

Finishes

Electroless Nickel and Olive drab cadmium

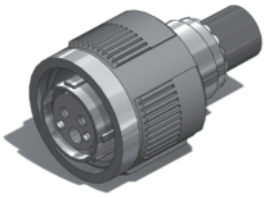

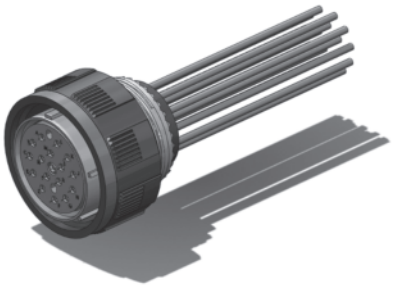

IN DEVELOPMENT

A801 Termini

- Genderless termini allows for use on both sides of a connector
- The Alignment sleeves are contained in a separate carrier which is removable for easier end-face maintenance
- Ultra Precision ceramic ferrules and sleeves ensure accurate fiber-to-fiber alignment
- Termini are keyed to provide anti-rotation
- Termini body is crimped to the cable providing a Pull-Proof solution

Performance expected

- Insertion Loss at 850 Nm 0.30 dB max., 0.15 dB typical for multi-mode
- Return Loss 850 Nm –20 dB max – 40 dB typical multi-mode

Catalog 1308940
Revised 9-14

www.te.com

Dimensions are shown for reference purposes only. Specifications subject to change.

Dimensions are in millimeters unless otherwise specified.

USA: +1 800 522 6752
Asia Pacific: +86 0 400 820 6015
UK: +44 800 267 666

For additional support numbers please visit www.te.com

Ruggedized Singleway Connector (RSC)

Ruggedized Singleway Connector (RSC)

Product Facts

- **Insert-to-insert keying assists precision alignment**
- **Individually rear insertable/ removable optical contacts enable easy assembly**
- **Backshells and adaptors available for most single and multifiber cable types**

Fiber Type – 8, 50, 62.5, 85/125µm
100/140µm
200/230µm
200/280µm
200/300µm

Cable size – 1.6mm to 5mm

Simplex tight jacket Kevlar reinforced secondary buffered fiber

Materials

Shell – Arcap
Contact body – Arcap
Ferrule – Zirconia
Alignment sleeve – Zirconia
Seals – Fluorosilicone
Plating – Nickel

Optical Performance

Insertion loss – 0.25dB typical
Return loss – -40dB typical*
Repeatability – Better than 0.2dB

Temperature

High temperature endurance – +155°C*
Low temperature endurance – -65°C*

Durability – not less than 500 matings

TE's RSC range of high performance fiber optic connectors are manufactured from Arcap for corrosion resistance and feature a rugged construction, incorporating environmental sealing and an anti-vibration coupling mechanism. The optical contact is sprung loaded and common to both plug and receptacle to maintain physical contact even under severe shock or vibration. The RSC range is suitable for both singlemode and multimode applications, and features easily accessible fiber faces for cleaning purposes.

Key Features

- Precision Zirconia ceramic ferrule and alignment sleeve to ensure superior repeatable optical performance with physical contact polishing techniques
- Manufactured from Arcap for corrosion resistance
- Easy access to ferrule to facilitate simple cleaning and maintenance
- Common ferrule carriers for the plug and receptacle
- Optical contact is sprung loaded in both the plug and receptacle to maintain physical contact even under severe shock or vibration
- Simple termination process and tooling
- Anti-vibration coupling mechanism
- Six alternative shell keyway orientations provide protection from inadvertent mis-mating
- Able to accommodate various sizes of multimode and singlemode fiber - (8/125, 50/125, 62.5/125, 100/140, 200/280mm)
- Able to accommodate various sizes of simplex cable (1.6mm - 5mm)
- Compatible with HA Connector series

Catalog 1308940
Revised 9-14

www.te.com

Dimensions are shown for reference purposes only. Specifications subject to change.

Dimensions are in millimeters unless otherwise specified.

USA: +1 800 522 6752
Asia Pacific: +86 0 400 820 6015
UK: +44 800 267 666

For additional support numbers please visit www.te.com

Ruggedized Singleway Connector (RSC) (Continued)

Dimensional Information

All dimensions in inches (except threads). To complete part number for ordering see 'ordering information'

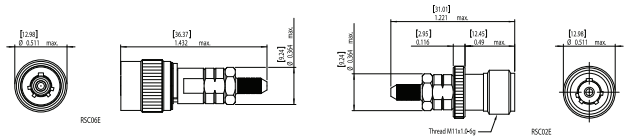

Plug **Free Receptacle**

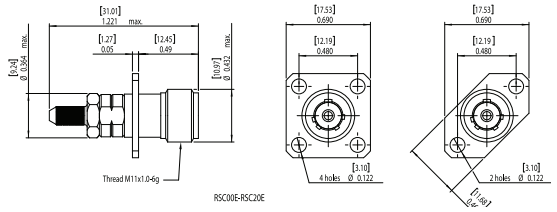

Receptacles

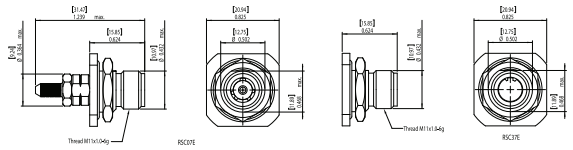

Jam Nut Receptacle **Dummy Receptacle**

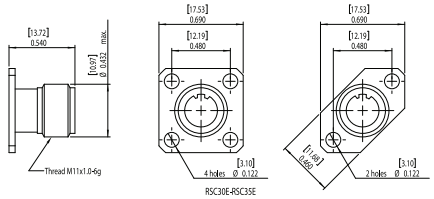

Dummy Receptacles and Mounting

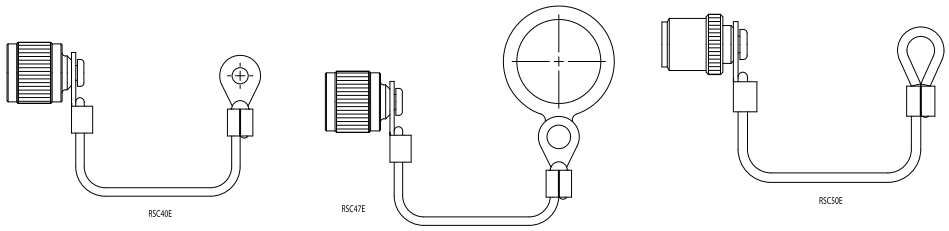

Procap

Ruggedized Singleway Connector (RSC) (Continued)

Ordering Information

RSC **E- * -***

Series:

Shell style:
00 = Bulkhead receptacle
06 = Plug
07 = Jam nut
20 = Protective cap plug
30 = Dummy receptacle
40 = Protective receptacle

Shell orientation:
N, A, B, C, D, E

100 cable diameter 2.5mm O/D
180 cable diameter 1.8mm O/D
200 cable diameter 2.0mm O/D
300 cable diameter 1.65mm O/D
400 cable diameter 3.0mm O/D
500 cable diameter 3.2mm O/D
600 cable diameter 2.1mm O/D
700 cable diameter 1.6mm O/D*
800 cable diameter 3.7mm O/D
900 cable diameter 5.0mm O/D

*Special glass braid

For other cable types, please consult the sales office.

Example part number: RSC06E-N-100
RSC plug, 'N' orientation, 2.5mm cable

Optical Contacts

(Must be ordered seperately)

Mode	Fiber size	Part number
Singlemode	8/125µm	456099SM-126
	50, 62.5/125µm	456099-126
	100/140µm	456099-145
	100/172µm	456099-176
Multimode	200/220µm	456099-224
	200/230µm	456099-232
	200/280µm (flat faced)	454103-283
	200/300µm	453800-305

Plesae contact technical support for termination tools and consumables.

Accessories

Fixing	Dummy receptacle part number	Protective cap part number
4 hole	RSC30E	RSC40E
2 hole	RSC35E	
Jam nut	RSC37E	RSC47E

Hermetic Receptacle (RSC07HE)

Key Features

- Compatible with the RSC plug connector
- Leak rate < 1x10-6 cc/s
- 125ºC temperature rating

Dimensional Information

All dimensions in inches (except threads). To complete part number for ordering see 'ordering information'

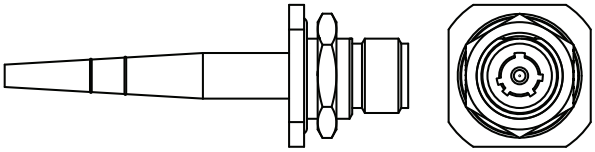

Ordering Information

RSC07HE -* -*** -***

Series:

Shell orientation - N, A, B, C, D, E

Fiber size - 125, 140, 280µm

Pigtail length - cms

Example part number: (pigtail cable 900µm buffer only)
RSC07HE-N-283-100 receptacle, pigtail, 'N' orientation, 280µm fiber, 100cm cable

Quality Approvals

- Civil Aviation Authority A8-1
- BS EN ISO 9001
- Military Spec Approvals 38999
- BS9000 and CECC
- Underwriters Laboratories
- BS EN IS09001:2000 (BSI)
- BS/EN 9100:2003 (BSI)
- AS9100 Rev B (BSI)
- AS9120:2002 (BSI)
- EASA Part 21 Subpart G (CAA)
- BS9000 (BSI)
- Underwriters Laboratories (UL)
- Military Spec Approvals 38999 (DSCC)

Dimensions are shown for reference purposes only. Specifications subject to change.

Dimensions are in millimeters unless otherwise specified.

USA: +1 800 522 6752
Asia Pacific: +86 0 400 820 6015
UK: +44 800 267 666

For additional support numbers please visit www.te.com

Sealed Circular LC ODVA

Sealed Circular LC ODVA Conforming Connector

Product Facts

- IP67 rated to ensure protection from dust and water immersion
- LC connector qualified to Telcordia GR-326 and TIA/EIA 568B.3
- Temperature range of –40°C to 85°C
- Bayonet-style mechanical lock
- Flame retardant materials per UL 94 V-0
- Dual mounting bulkhead design
- Singlemode and multimode fiber
- Can be used with cable types 9/125, 50/125 and 62.5/125
- LC to LC internal to the box Jumpers
- LC connector accepts tactical cable with 4.5 mm – 7.5 mm OD
- ODVA Conforming Plug to X interface on tactical with break out
- ODVA Conforming Plug to Plug on tactical cable
- Build to customer need

Applications

The LC ODVA Conforming Connector is ideal for:

- Harsh environments where chemicals, corrosive gases and liquids are commonplace
- Inside and outside industrial plant and equipment that interface with industrial Ethernet networks
- Remote interface applications such as towers and antennae as well as FTTX in PON and at the home applications
- Mobile routers and internet hardware

Plug Part Numbers:
1828618-1 (Multimode)
1828618-2 (Singlemode)

Receptacle Part Numbers:
1828619-1 (Multimode)
1828619-2 (Singlemode)

Plug & Receptacle Cap Part Numbers:

Plug Cap	1828740-1
Receptacle Cap	1918177-1

ASSEMBLY CAPABILITIES
TE Connectivity has extensive Rugged Optic Harness capabilities. Please consult your local TE Sales representative for assistance.

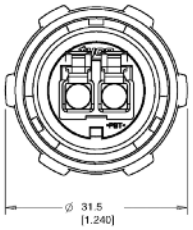

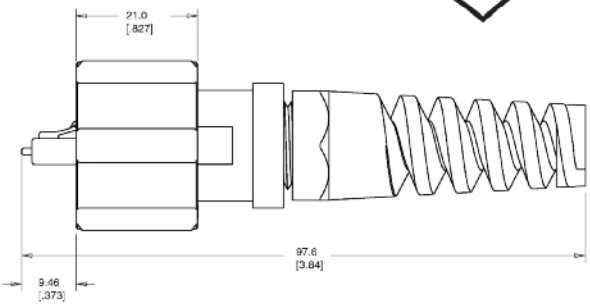

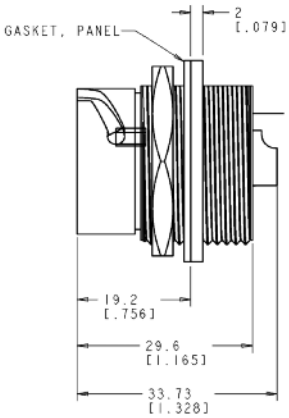

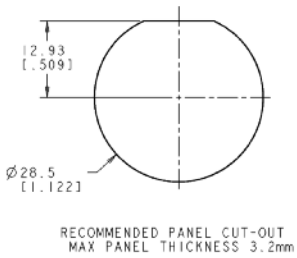

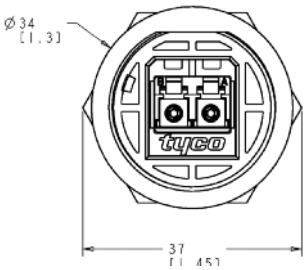

Standard Cable Assemblies

Part Number	Description
1828935-X	ODVA LC Interface, 62.5, 2 Fiber
1828936-X	ODVA LC Interface, Singlemode, 2 Fiber

Note: X = length in meters

Note: All part numbers are RoHS compliant.

Dimensions are shown for reference purposes only. Specifications subject to change.

Dimensions are in millimeters unless otherwise specified.

USA: +1 800 522 6752
Asia Pacific: +86 0 400 820 6015
UK: +44 800 267 666

For additional support numbers please visit www.te.com

Rugged Circular Connectors

EMPIRE

Product Facts

- **Facilitates the implementation of fiber sensors within composites**
- **Protection of fiber at composite entry/exit point**
- **Receptacle connector physically embedded within composite material**
- **Available as panel edge or surface mount configuration**

A unique, patent pending Fiber Optic connector technology that allows designers to reliably connect embedded optical fibers to external monitoring equipment, eliminating the problems of fixed 'flying lead' connections to the structure. See TE.com for additional information.

Fiber Optic Cable Assemblies and Harnesses

Product Facts

- **Custom designs available**
- **Custom lengths for harnessing**
- **Dedicated Fiber Optic harness facility**
- **Capability to work closely with customer to fully define requirements**

TE also has dedicated design and manufacturing resources available to provide rugged and reliable Fiber optic harnesses for Aerospace, Military communications, Railways, Autosport and Industrial equipment.

Catalog 1308940
Revised 9-14

www.te.com

Dimensions are shown for reference purposes only. Specifications subject to change.

Dimensions are in millimeters unless otherwise specified.

USA: +1 800 522 6752
Asia Pacific: +86 0 400 820 6015
UK: +44 800 267 666

For additional support numbers please visit www.te.com

Rugged Board Level Connector

Ruggedized Optical Backplane Interconnect for VITA 66

Product Facts

- **Receptacle designed to maximize optical performance**
- **Connectors accommodate up to two MT ferrules**
- **Locating post features helps ensure proper position on the backplane and module boards**
- **Common protective cover is made of anti-static material**
- **Plug (daughtercard) connector housing contains a slot feature to facilitate cleaning the MT interfaces**
- **Receptacle (backplane) connector includes two robust guide pins for blind-mating**
- **Receptacle connector insert floats relative to the shell, providing ±0.25mm planar floating alignment capability**
- **Connector mounting screws contain pre-applied Nylok patch to withstand vibration**

Mechanical

Mating Force (per 12-fiber MT ferrule) – Min: 7.8N [1.75 lb]
Max: 11.8N [2.65lb]

Durability – 100 cycles, tested per EIA-455-21

Shock – 50G, sawtooth, 11 msec pulse duration, tested per TIA/EIA-455-14, condition E

Random Vibration – 11.95 G (rms), 50-2000 Hz, 2 hrs per plane - tested per TIA/EIA-455-11, test condition V1-D

Materials

Connector shell & housing – Aluminum alloy 6061, clear-chromate conversion-coated (RoHS compliant)

Alignment posts & screws – Stainless Steel, 300 series, passivated (RoHS-compliant)

TE Connectivity's (TE) Ruggedized Optical Backplane interconnect system provides a high-density, blind-mate optical interconnect in a backplane/daughtercard configuration. The fiber optic (ribbon) cable interconnect is fedthrough the backplane to removable system modules using MT ferrules.TE offers the optical system in both a receptacle (backplane) and matingplug (daughtercard) connectors which interconnect up to two MT ferrules,each accomodating up to 24 fiber paths. Other options are available using industry standard ARINC 801 fiber terminus and TE's Expanded Beam, Pro Beam interface in a four-fiber configuration.

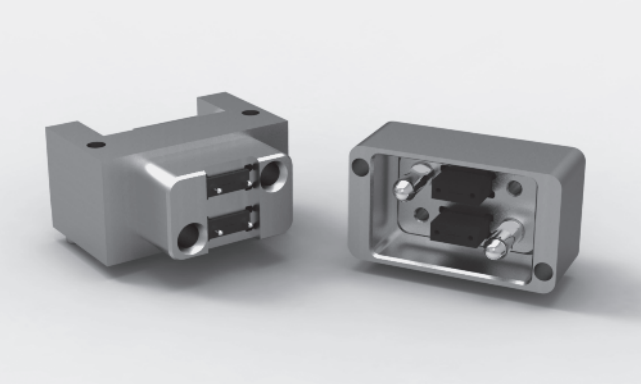

Key Features

- Receptacle designed to maximize optical performance
- Connectors accommodate up to two MT ferrules
- Locating post features helps ensure proper position on the backplane and module boards
- Common protective cover is made of anti-static material
- Plug (daughtercard) connector housing contains a slot feature to facilitate cleaning the MT interfaces
- Receptacle (backplane) connector includes two robust guide pins for blind-mating
- Receptacle connector insert floats relative to the shell, providing ±0.25mm planar floating alignment capability
- Connector mounting screws contain pre-applied Nylok patch to withstand vibration

	Part No.	
Interface	**Backplane**	**Daughtercard**
VITA 66.1: MT	2000973-1	2000974-1
MT Ferrule Kit (12 Fiber, Multimode)	2102866-1	2102866-2

Backplane Module - PN 2000973-1

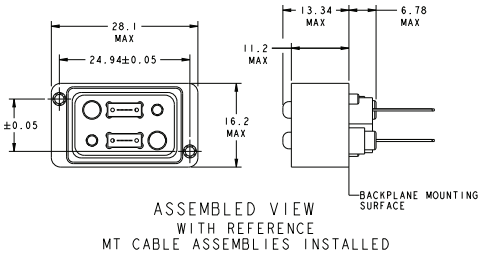

Daughtercard Module - PN 2000974-1

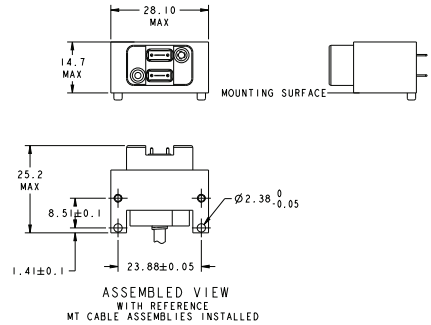

Dimensions are shown for reference purposes only. Specifications subject to change.

Dimensions are in millimeters unless otherwise specified.

USA: +1 800 522 6752
Asia Pacific: +86 0 400 820 6015
UK: +44 800 267 666

For additional support numbers please visit www.te.com

Navy CID Approved Epoxy Applied

Tight Jacketed LC Connectors

Product Facts

- **Multimode or singlemode**
- **Simplex or duplex**
- **Tested using MIL-PRF-85045/16 2.0 mm cable**
- **LC Commercial Item Description (CID) interim approval by the Naval Surface Warfare Center, Dahlgren Division**

Application

- **In Flight Networks**
- **Shipboard Applications**
- **Aero Market**

The Tight Jacket LC Connector is a robust design for rugged applications including but not limited to:

- **Extreme temperatures -55°C to +110°C**
- **Excessive vibration or physical shock**

Test reports available upon request.

The tight jacketed LC Connectors are non pull-proof versions of the standard connectors that are designed for use with tight construction cable. Unlike standard connectors, this design allows the jacket and buffer to move together, reducing the chances of micro-bends and fiber breakage.

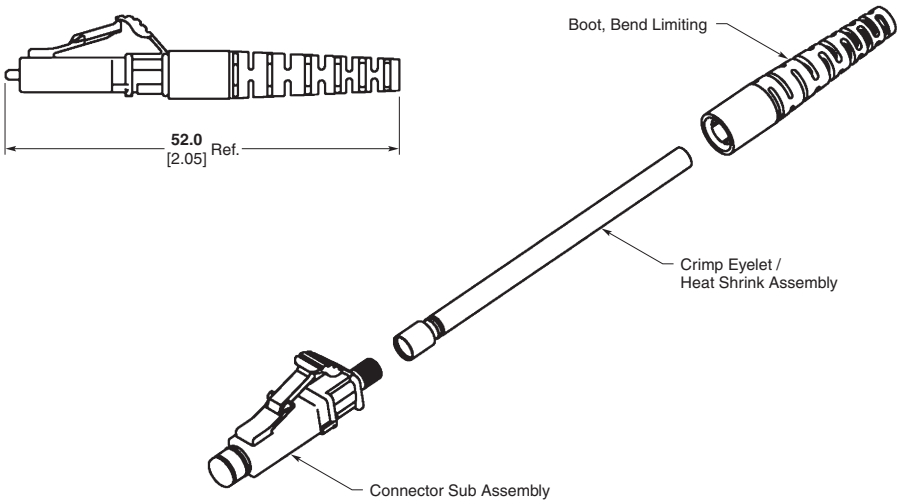

Fiber Type	Kit Part Number	Description
Singlemode (blue body & straight boot)	6828095-X	Simplex, 1.6–2.0 mm
	6828130-X	Duplex, 1.6–2.0 mm
	1918228-X	Simplex, 2.4 mm
	2123524-X	Duplex, 1.6–2.0 mm, transceiver optimized
Multimode (beige body & straight boot)	6828094-X	Simplex, 1.6–2.0 mm
	6828129-X	Duplex, 1.6–2.0 mm
	1918153-X	Simplex, 2.4 mm
	2123265-X	Simplex, 2.4 mm, transceiver optimized

Note: X = -1 for individual package, -2 for bulk package.
Instruction Sheet 408-10014. See http://www.te.com/documents.
Duplex Clip Available (Part Number 1754371-1).

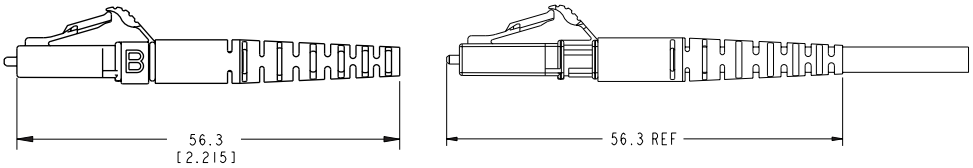

Note: All part numbers are RoHS compliant.

Catalog 1308940
Revised 9-14

www.te.com

Dimensions are shown for reference purposes only. Specifications subject to change.

Dimensions are in millimeters unless otherwise specified.

USA: +1 800 522 6752
Asia Pacific: +86 0 400 820 6015
UK: +44 800 267 666

For additional support numbers please visit www.te.com

SC Connectors

Tight Jacketed SC Connectors

Product Facts

- Multimode or singlemode
- Simplex or duplex
- Tested using MIL-PRF-85045/16 2.0 mm cable
- SC Commercial Item Description (CID) interim approval by Naval Surface Warfare Center, Dahlgren Division

Application

- In Flight Networks
- Shipboard Applications
- Aero Market

The tight jacketed SC Connectors are non pull-proof versions of the standard connectors that are designed for use with tight construction cable. Unlike standard connectors, this design allows the jacket and buffer to move together, reducing the chances of micro-bends and fiber breakage.

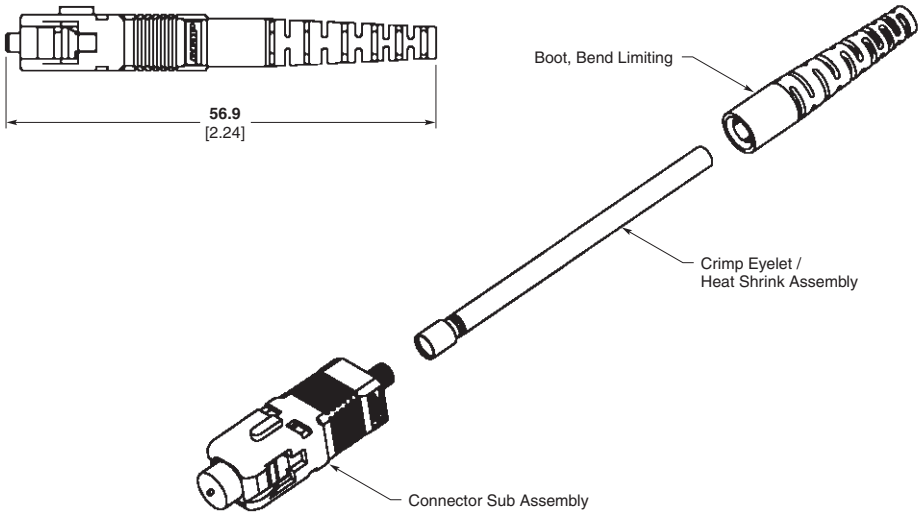

Tight Jacketed SC Connector Kits

Fiber Type	Kit Part Number	Description
Singlemode (blue body & straight boot)	6828100-X	Simplex, 1.6–2.0 mm
	1828573-X	Duplex, 1.6–2.0 mm
	1918227-X	Simplex, 2.4 mm
Multimode (beige body & straight boot)	6828099-X	Simplex, 1.6–2.0 mm
	1828574-X	Duplex, 1.6–2.0 mm
	1918154-X	Simplex, 2.4 mm

Note: X = -1 for individual package, -2 for bulk package.
Instruction Sheet 408-10015. See http://www.te.com/documents.

Note: All part numbers are RoHS compliant.

Catalog 1308940
Revised 9-14

www.te.com

Dimensions are shown for reference purposes only. Specifications subject to change.

Dimensions are in millimeters unless otherwise specified.

USA: +1 800 522 6752
Asia Pacific: +86 0 400 820 6015
UK: +44 800 267 666

For additional support numbers please visit www.te.com

LC Plus — Navy Approved

LC, SC and LightCrimp Plus ST Approved by U.S. Navy for Use On Board Ships

LightCrimp Plus ST Fiber Optic Connector Features and Benefits:

- **LightCrimp Plus technology delivers the ability to terminate the fiber optic ST connector with mechanical tools by the ferrule being factory polished and terminated to the connector body**
- **The mechanical process enables a simple strip, clean, cleave crimp process that improves process time and eases the complexity of the installation**

Termination Kits:

- **The LightCrimp Plus MM ST part 2064757-1 has a dedicated termination kit, part number 2064764-1, suggested for its implementation. TE provides a wide variety of tools required to prepare and terminate LightCrimp Plus ST connectors.**

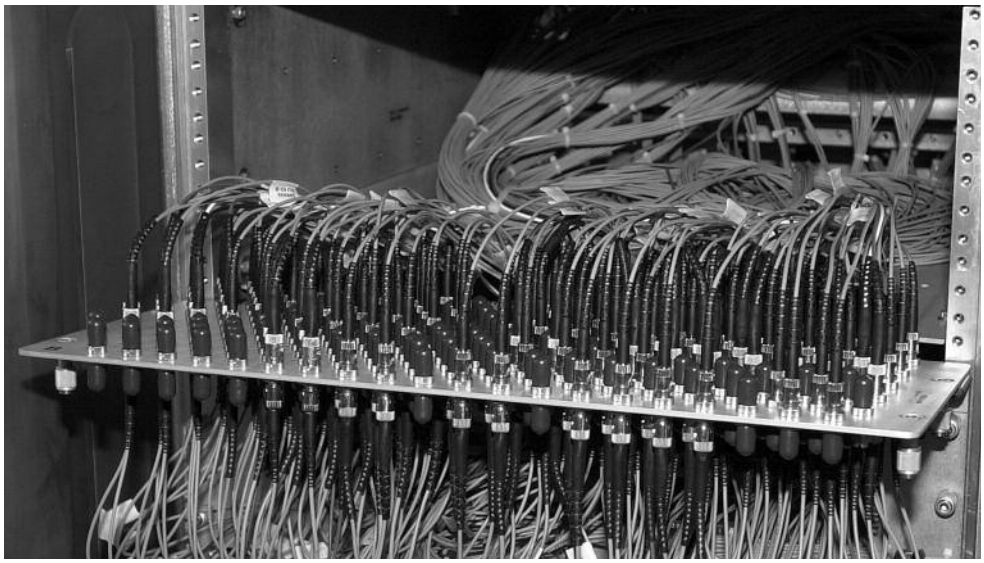

Whether you're designing local area networks, communications systems or equipment, innovative fiber optic applications begin with innovative fiber optic products. TE Connectivity offers a complete line of fiber optic products to help your designs make light work for you.

TE's comprehensive fiber connector line delivers virtually all industry-standard connections, including LightCrimp Plus ST-Style and epoxy applied Tight Jacketed LC and SC and many others. They bring fiber to the desk at a cost that is competitive with copper.

LightCrimp Plus ST Fiber Optic Connectors

TE LightCrimp Plus ST-Style connectors are available in single or multimode configurations and can be crimped to the fiber. Any, they can install in under two minutes, without epoxy.

TE recently obtained approval from the U.S. Navy for its Multimode LightCrimp Plus ST Connector. This connector has been added to the "Navy Recommended Fiber Optic Components Parts List" located at https://fiberoptics.nswc.navy.mil/, and is currently listed under the TE part number **(2064757-1)**. In addition, it is listed under the CID number A-A-59917. This approval is the latest in this series and joins the approved status of the LC and SC tight construction epoxy optic connectors listed on the components parts list.

LightCrimp Plus ST

* Commercial Item Description

Catalog 1308940
Revised 9-14

www.te.com

Dimensions are shown for reference purposes only. Specifications subject to change.

Dimensions are in millimeters unless otherwise specified.

USA: +1 800 522 6752
Asia Pacific: +86 0 400 820 6015
UK: +44 800 267 666

For additional support numbers please visit www.te.com

LC Plus — Navy Approved (Continued)

Combination LIGHTCRIMP PLUS SC/ST/LC Termination Kit Part Number 1985162-1

Note: All part numbers are RoHS compliant.

Catalog 1308940
Revised 9-14

www.te.com

Dimensions are shown for reference purposes only. Specifications subject to change.

Dimensions are in millimeters unless otherwise specified.

USA: +1 800 522 6752
Asia Pacific: +86 0 400 820 6015
UK: +44 800 267 666

For additional support numbers please visit www.te.com

LightCrimp Splice

Product Facts

- **Terminates 250 µm coated, 900 µm tight-buffered fibers and 2.0 mm jacketed cable**
- **Attenuation (typical): ≤ 0.1 dB**
- **Return Loss (at ambient; 18°–28° C): ≥ 20 dB multimode ≥ 35 dB single-mode**
- **Operating Temperature: -25 to 70° C**
- **Storage Temperature: -40 to 85° C**
- **Tensile retention:**
  250 µm coated: 2.0 N
  900 µm buffered: 3.0 N
  Jacketed: 50.0 N
- **Fast, easy fiber splicing**
- **No epoxy required**
- **No set-up required**
- **No workstation required**
- **Ideal for low-fiber count cables**
- **Same LightCrimp Splice for single-mode and multimode 125 µm diameter fibers**
- **Kit includes rugged case**

LightCrimp splices provide rugged, miniaturized form-factor that assures consistent crimp quality, dependability, and performance that rivals fusion splices. LightCrimp splices have been tested in accordance with IEC 61300 procedures, with an operating temperature range extending from -25° C to +70° C.

LightCrimp splices have been designed to meet TIA 568-C.3, IEC 61753 Cat U, and EN optical requirements.

LightCrimp splices provide the proven performance based on technology used to install more than one million LightCrimp Plus connectors.

Navy approved CID commercial item.

Description #A-A59917

Description	Part Number
LightCrimp Splice for 250 µm, 900 µm and 2.0 mm Jacketed Cable	1985368-1
LightCrimp Splice Termination Tool Kit	2064764-1

LightCrimp PLUS Kit Part Number 1985801-1

Capable of terminating: In Line Mechanical Splice Part Number 1985368-1 and LightCrimp PLUS LC/SC

Part Numbers:

2123277-1 & -2 Simplex MM LC

2123278-1 & -2 Duplex MM LC

2123279-1 Simplex SM

2123280-1 Duplex SM

Catalog 1308940
Revised 9-14

www.te.com

Dimensions are shown for reference purposes only. Specifications subject to change.

Dimensions are in millimeters unless otherwise specified.

USA: +1 800 522 6752
Asia Pacific: +86 0 400 820 6015
UK: +44 800 267 666

For additional support numbers please visit www.te.com

Offshore Optical Connectors and Cable Assembly

9316 Optic

Product Facts

- **Dry Mate connection**
- **Explosion proof area**
- **Multiway up to 12 FO**
- **Operating pressure up to 40 bar**
- **Single or Multimode fibers can be combined**
- **Backshell custom design available**

9316 series has been designed to withstand the most severe environments in marine and offshore applications.

A special care was taken concerning:

- Easy handling
- Mechanical stress
- Use in polluted environments
- Use in harzardous areas

Showet

Product Facts

- **Hybrid product 4 FO and 4 copper contacts**
- **SplashZone connector**
- **Operating pressure up to 80 bar**
- **Single or Multimode fibers can be combined**

Combines optical and copper connectivity in a single shell. Supporting both signals and control copper cabling and single-mode and multimode optical fibers to allow the replacement of multiple connectors by one.

MOD

Product Facts

- **Explosion proof area**
- **SplashZone connector**
- **Multiway up to 8 FO**
- **Operating pressure up to 40 bar**
- **Single or Multimode fibres can be combined**

MOD is an explosion-proof connector suited to topside application, quick connect/ disconnect coupling for reliable operation in hazardous environments such as FPSO turrets.

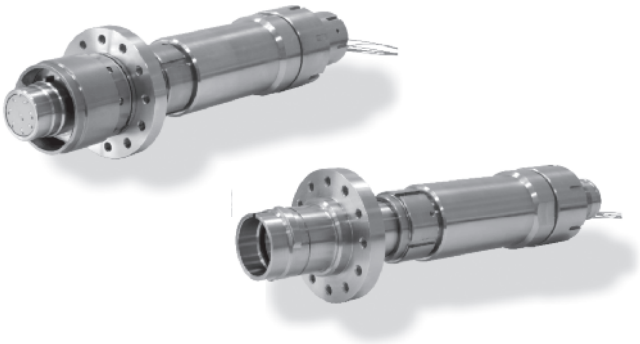

DO3000

Product Facts

- **Optical Subsea Wet Mateable**
- **ROV, Bulkhead, Stab plate and Diver versions**
- **Custom design available**
- **Back Reflection <-45dB**
- **Insertion loss <0.5dB**
- **100 matings**
- **Single or Multimode fibers can be combined**

D03000 is a high performing choice for optical applications requiring up to 12 channels and the ability to withstand operational water depths to 4500 m.

Optimized for Subsea Fiber Optic Distribution systems and connections to Subsea Trees.

Catalog 1308940
Revised 9-14

www.te.com

Dimensions are shown for reference purposes only. Specifications subject to change.

Dimensions are in millimeters unless otherwise specified.

USA: +1 800 522 6752
Asia Pacific: +86 0 400 820 6015
UK: +44 800 267 666

For additional support numbers please visit www.te.com

Table of Contents

ARINC 600 Connectors

Introduction 4-2
ARINC 600 Next Generation Connector 4-3, 4-4
Ordering Information 4-5
Shell Size 1 4-6
Shell Size 2 4-7
Shell Size 3 . . . . . 4-8, 4-9
Contact Inserts and Arrangement Codes . . . . . 4-10 to 4-13
Fiber Optic Inserts and Cavity Reducers 4-14
Keying 4-15, 4-16
Contact Style/Shell Modification Codes 4-17, 4-18
Crimp, Snap-In Contacts 4-19
Posted Contacts 4-20, 4-21
COAXICON Contacts . . . . . 4-22 to 4-25
Traffic Alert and Collision Avoidance System (TCAS) Connectors and Mode S Transponder Connectors 4-26, 4-27
Single Mod ARINC 600 . . . . . 4-28 to 4-30
EMI/Ground Spring 4-31
Recommended Panel Cutouts 4-32, 4-33
Accessories 4-33
Application Tooling and Insertion/Extraction Tooling 4-34
Cross Reference . . . . . 4-35 to 4-37
MIL 600 Style Connectors . . . . . 4-38 to 4-44

ARINC 404 Connectors

Introduction 4-45
Ordering Information 4-46
One- and Two-Insert Shells 4-47
Three- and Four-Insert Shells 4-48
Contact Inserts 4-49
Modifications 4-50, 4-51
Keying (Table on pages 4-15 & 4-16) 4-52
Custom Order Codes 4-52
Size 22 Contacts — Pin Diameter .030 [0.76] 4-53
Size 20 Contacts — Pin Diameter .040 [1.02] 4-53
Size 16 Contacts — Pin Diameter .062 [1.58] 4-54
Size 12 Contacts — Pin Diameter .096 [2.39] 4-54
Application Tooling & Insertion/Extraction Tooling 4-55
COAXICON Contacts . . . . . 4-56 to 4-58
Plugs, Boots and Caps 4-59
106-Contact Inserts for Flexible Flat Cable 4-59
Flexible Flat Cable Applications 4-60
Special Shells and Inserts 4-61
Cross Reference 4-62, 4-63
Military Cross Reference . . . . . 4-64 to 4-70

HexaShield High-Performance EMC/EMI Adapters . . . . . 4-71 to 4-76

Catalog 1308940
Revised 9-14

www.te.com

Dimensions are shown for reference purposes only. Specifications subject to change.

Dimensions are in millimeters unless otherwise specified.

USA: +1 800 522 6752
Asia Pacific: +86 0 400 820 6015
UK: +44 800 267 666

For additional support numbers please visit www.te.com

Introduction

Product Facts

- **Designed to meet relevant ARINC 600 Connector specifications**
- **Available in three sizes as well as custom versions**
- **Low mating-force contacts — suitable for ARINC 404 and ARINC 600 Connectors**
- **Full range of contact inserts**
- **Custom backshells available in configurations to suit any application. Contact TE Connectivity for detailed information.**

Specifications

Temperature Range — -85˚F to 257˚F [-65°C to 125°C]

Mating and Unmating Forces — (Max. after 3 cycles)
Size 1 — 27 pounds [120 N]
Size 2 — 60 pounds [267 N]
Size 3 — 105 pounds [467 N]

Contact Retention against axial load —
Size 22 — 12 pounds [53 N]
Size 20 — 20 pounds [89 N]
Size 16 — 25 pounds [111 N]
Size 12 — 30 pounds [133 N]
Coaxial — 35 pounds [156 N]
(In testing, exposure to rated loads produced no contact damage and resulted in displacement less than .015 [0.38])

Voltage/Current Ratings —

Contact	AWG	Max. Current (A)
Size 22	22	5.0
Size 20	20	7.5
Size 16	16	13.0
Size 12	12	23.0

Durability — 500 cycles min. — mating and unmating (In testing, wired mated connectors cycled at a rate slower than 300 cycles per hour, showed no apparent damage or contact resistance greater than rated values)

High Temperature Tolerance — 1000 hours min. at 257˚F [125°C] (Wired, mated connectors)

Salt Spray Tolerance — As specified by MIL-STD-1344, method 1001, Condition B

Fluid Imperviousness — MIL-L-23699; MIL-H-5606: 1:3 mix isopropyl alcohol and mineral spirits (Test immersions of mated connectors in these fluids caused no evident deterioration)

Vibration and Shock Tolerance — Per MIL-STD-1344, methods 2004-1 and 2005-1 (Testing to these conditions, including vibration for 8 hours in each of 3 mutually perpendicular axes, caused no visible cracking, breaking or loosening of parts, and no discontinuities exceeding 1 microsecond)

Humidity Tolerance — Insulation resistance 1 megohm min., 1-2 hours after exposure to humidity per MIL-STD-1344, Method 1002-1, Type II; 5000 megohm min. after 24 hours at 77˚F [25°C].

Dielectric Withstanding Voltage — (Min.) 1500 VAC, RMS 60 Hz at sea level; 500 VAC, RMS 60 Hz at 50,000 ft. [15240 M] (Testing at rated voltages for 60 seconds produced no flash over and 1 mA leakage, max.)

Insulation Resistance — 1000 megohms min. (Test conducted on unmated connector after 30 min. exposure to 248˚F–257˚F [120°C–125°C])

Contact Resistance — Mated pairs tested per MIL-STD-1344, Method 3004-1

Technical Document — ARINC 600 Product Specification 108-10050

ARINC 600 Connectors are used in virtually all airframes and today's state-of-the-art avionics equipment. From collision avoidance (TCAS, TAWS) to in-flight entertainment/networking, new avionics equipment demands higher data transmission rates. Whether it's Fibre Channel, or 100-Base-T or 100-Base-FX Ethernet and beyond, TE has the insert configurations and copper and fiber hardware (Quadrax contacts, RF, ARINC 801 inserts and Mini-Expanded Beam Fiber Optics) to meet the need. Standard industry configurations are available. For designs that require custom configurations, TE will work with you to provide the connector solution required.

ARINC 600 Connectors represent a new generation of standardized rack and panel connectors for aircraft applications. Compared to the preceding ARINC 404 standard, the new avionics connectors feature significantly reduced mating forces; increased numbers of contacts in housings proportioned to thinner black-box shapes; and floating, front-release keying.

ARINC 600 Connectors capitalize on the new design by adding unique features while maintaining intermateability. For instance, TE contact inserts are field replaceable and manufactured to precise tolerances.

TE contacts for ARINC 600 Connectors are applied with standard crimping tools—the same ones used for ARINC 404 contacts. Automatic crimping equipment is available for higher productivity and lower applied costs. The benefits of ARINC 600 reduced engagement force contacts (for example: size 22 contacts averaging 1.5 ounces [0.42 N]) can be realized in ARINC 404 connectors through the use of the interchangeable ARINC 600 contacts. ARINC 600 coaxial contacts also are crimp applied for reliable, solder-free installation.

It is easy to specify ARINC 600 Connectors by descriptive part numbers. An example of a descriptive part number is shown on page 4-5, with an explanation of each component of the part number and page references for complete information.

ARINC 600 Next Generation Connector

Product Facts

- **Completely inter-mateable with existing ARINC 600 plug connectors**
- **"Monoblock" single-piece inserts that simplify the manufacturing process, saving cost**
- **Stamped and formed, selectively plated size 22 contacts provide substantial cost savings while delivery excellent performance and reliability**
- **Equivalent electrical performance vs. current design**
- **Available in either Solder Tail or Press-fit (eye of the needle) designs**
- **Up to 10% weight savings per connector (depending on insert arrangement)**

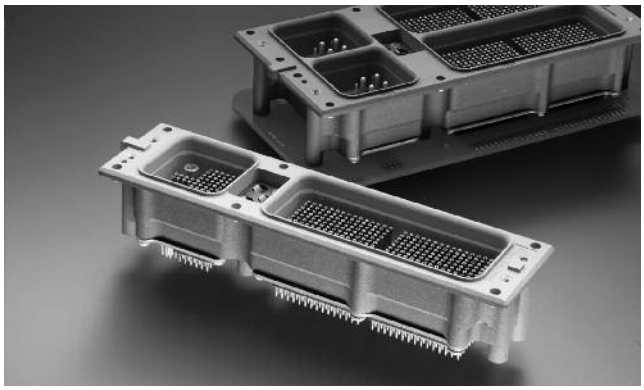

Description

Whether it's collision avoidance, in-flight entertainment, or air-to-ground communications, today's Avionics manufacturers face a challenging economic environment and an ever-increasing demand for weight reduction. In response to these market demands, TE has developed a revolutionary Next Generation ARINC 600 receptacle connector that offers the "perfect solution" for Avionics manufacturers seeking reduced cost and weight.

TE's Next Generation ARINC 600 receptacle uses proven connector design principles that represent breakthrough technologies in the ARINC 600 connector marketplace.

Applications

Avionics boxes: IFE, IFN, Flight control and communications

Military ground vehicles

Size 22 Stamped & Formed Solder Tail Contact System

Solder tail contact design for complete backwards compatibility with legacy contact and PCB designs

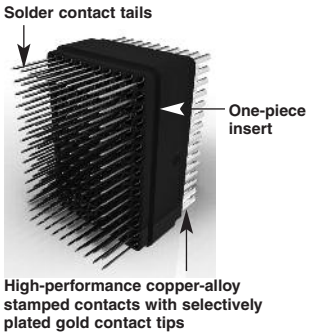

Size 22 Stamped & Formed Press-fit Contact System

Press-fit, "eye-of-the-needle" contact tail design for applied cost savings during printed circuit board assembly

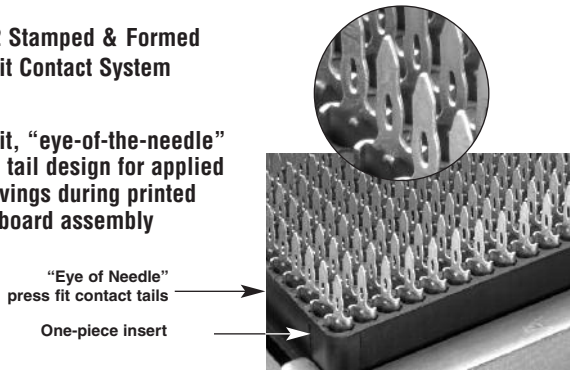

Standards and Specifications

Product Specifications — (Solder Tail): 108-2423 (EON Design): 108-2384

ARINC 600 - 18 — Air Transport Avionics Equipment Interfaces

Product Validation Test Report — 502-1263

Application Specification (EON Design) — 114-13272

Mechanical

Mating and Unmating Forces (Max. after 3 cycles) — Size 2 — 60 pounds (267 N) Size 3 — 105 pounds (467 N)

Contact Retention against Axial Load — Size 22 — 12 pounds (53 N)

Durability — 500 cycles min — mating and unmating (In testing, wired mated connectors cycled at a rate slower than 300 cycles per hour, showed no apparent damage or contact resistance greater than rated values)

Vibration and Shock Tolerance — Per MIL-STD-1344, methods 2004-1 and 2005-1 (Testing to these conditions, including vibration for 8 hours in each of 3 mutually perpendicular axes, caused no visible cracking, breaking or loosening of parts, and no discontinuities exceeding 1 microsecond)

Environmental

Temperature Range — -85˚F to 257˚F (-65˚C to 125˚C) Process capability rating: the contact and insert shall be capable of withstanding wave solder processing (270˚C for 10 seconds) and vapor phase processing (260˚C for 2 minutes)

High Temperature Tolerance — 1000 hours min. at 257˚F (125˚C) (Wired, mated connectors)

Salt Spray Tolerance — As specified by MIL-STD-1344, method 1001, Condition B

Fluid Imperviousness — MIL-L-23699; MIL-H-5606: 1:3 mix isopropyl alcohol and mineral spirits (Test immersions of mated connectors in these fluids caused no evident deterioration)

Humidity Tolerance — Insulation resistance 1 megohm min., 1-2 hours after exposure to humidity per MIL-STD-1344, Method 1002-1, Type II; 5000 megohms min. after 24 hours at 77˚F (25˚C)

Electrical

Dielectric Withstanding Voltage — (Min.) 1500 VAC rms 60 Hz at sea level; 500 VAC rms 60 Hz at 50,000 ft. (15240 m) — (Tested at rated voltages for 60 seconds produced no flash over and 1 mA leakage, max.)

Insulation Resistance — 1000 megohms min. (Test conducted on unmated connector after 30 min. exposure to 248˚F-257˚F (120˚C-125˚C)

Contact Resistance — Mated pairs tested per MIL-STD-1344, Method 3004-1

Voltage/Current Ratings —

Contact	AWG	Max. Current (A)
Size 22	22	5.0

Catalog 1308940
Revised 9-14

www.te.com

Dimensions are shown for reference purposes only. Specifications subject to change.

Dimensions are in millimeters unless otherwise specified.

USA: +1 800 522 6752
Asia Pacific: +86 0 400 820 6015
UK: +44 800 267 666

For additional support numbers please visit www.te.com

ARINC 600 Next Generation Connector (Continued)

P/N	Connector Description	Module A	Module B	Module C	Module D	Module E	Module F
1218049-4	ARINC600,RCPT ASSY,SZ2,SPCL,MONOBLK	150	150	13C2			
1218098-3	ARINC600,CONN ASY,RCPT,SZ3,FR,NG	150	150	13C2	150	150	13C2
1218644-3	RCPT ASSY,SIZE2,FR,ARINC600,NG	150	150	13C2			
1218657-2	RCPT ASSY,SZ2,FR,ARINC600,NG	150	150	13C2			
1484373-2	ARINC600,RCPT ASSY,SZ 2,NG	150	11Q11	13C2			
1663556-2	RCPT ASSY,SZ2,ARINC600,NG	120T2	120T2	11Q2			
1757544-3	ARINC600,RCPT ASSY,SZ2,150/36F36/13C2	150	36F36	13C2			
1757544-4	ARINC600,RCPT ASSY,SZ2,150/36F36/13C2	150	36F36	13C2			
1757691-2	A600R,SZ2,(C4/120T2/13C2),Next Gen	C4	120T2	13C2			
1757814-2	A600R,SZ3,150/150/13C/150/150/DUMM,NG	150	150	13C2	150	150	BLANK
1757875-2	A600,RCPT 120T2/150/13C2,NG	120T2	150	13C2			
1883712-2	A600R,SZ2,RCPT 150/150/85, Next Gen	150	150	85			
1883712-3	A600R,SZ2,RCPT 150/150/85, Next Gen	150	150	85			
1883910-2	A600R,SZ3,RCPT 150X4/13C2/100,NG	150	150	13C2	150	150	100
1996549-2	A600R,SZ3,150/150/13C2/150/150/13C2	150	150	13C2	150	150	13C2
1996655-2	A600R,SZ3,150/150/11Q2X2,sel. loading,NG	150	150	11Q2	150	150	11Q2
1996689-3	A600 RECEPT, SZ2,(11Q11/150/59) NG	11Q11	150	59			
2101123-2	A600 SZ2,RCPT150,110,11Q2,sel. loaded,NG	150	110	11Q2			
2101246-2	A600R,SZ2,150/150/13C2,sel.load,NG	150	150	13C2			
2101300-2	A600R,SZ2,150/11Q11/13C2,NG	150	11Q11	13C2			
2101472-2	A600R,SZ8,150/150/11Q2/150/150/11Q2,NG	150	150	11Q2	150	150	11Q2
2101697-1	ARINC600,SZ2,RDPT,150/150/13C2,s&f conts	150	150	13C2			
2101867-2	A600 SZ2,RECEPT,Q11/150/13C2,NG	11Q11	150	13C2			
2101882-2	A600 SZ3,150/85/150/150/Q6.CHRM,FR.250	150	BLANK	85	150	150	6Q6
2157023-2	A600 SZ1,RECEPTACLE ASSY,60/60/5Q2	60	60	5Q2			
2157232-1	ARINC600,RCPT,SZ2,150/150/100,STP/FRM	150	150	100			
2157609-2	ARINC600,RCPT,SZ3,150X4/11Q2X2,NG	150	150	11Q2	150	150	11Q2
2157736-1	ARINC600,RCPT,SZ1,30T2/60 (s/f)/4	30T2	60	4C4			
2157747-1	ARINC600,RCPT,SZ2,150/150/100	150	150	100			
2157778-1	ARINC600,RCPT,SZ3,150X4/100X2	150	150	100	150	150	100
2221242-2	SZ2, Rec Assy,150/150/13C2, Next Gen SL	150	150	13C2			
2221246-1	SZ2, Recept Assy,150/150/34, NG	150	150	34			
2221247-1	SZ2, Recept Assy,150/150/13C2, Next Gen	150	150	13C2			
2221248-1	SZ2, Recept Assy,150/150/Blank, Next Gen,SL	150	150	Blank			
2221249-1	SZ2, Recept Assy,150/150/100, Next Gen,SL	150	150	100			
2221251-1	SZ1, Recept Assy,60/60/Blank, Next Gen,SL	60	60	Blank			
2221252-1	SZ2, Recept Assy,150/150/13C2, Next Gen	150	150	13C2			
2221350-1	SZ2, Rec Assy,120T2/150/100, Select Load	120T2	150	100			
2221351-1	SZ3, Rec Assy,150/150/59/150/150/100,NG	150	150	59	150	150	100
2221352-1	SZ3, Rec,110/150/68Q2/11Q11/11Q11/6Q6,NG	110	150	68Q2	11Q11	11Q11	6Q6
2221353-1	SZ3, Rec,121/11Q11/100/150/11Q11/100,NG	121	11Q11	100	150	11Q11	100
2221354-1	SZ3, Rec,121/150/68Q2/150/11Q11/6Q6,NG	121	150	68Q2	150	11Q11	6Q6
2221355-1	SZ3, Rec,121/150/100/150/11Q11/6Q6,NG	121	150	100	150	11Q11	6Q6
2221356-1	SZ3, Rec,121/150/68Q2/11Q11/11Q11/6Q6,NG	121	150	68Q2	11Q11	11Q11	6Q6
2221376-1	SZ3, Rec,150/150/13C2/150/150/100,NG	150	150	13C2	150	150	100
2221379-1	SZ2, Rec. Assy,150/150/85,NG	150	150	85			
2221380-1	SZ2, Rec. Assy,150/150/13C2,NG	150	150	13C2			
2221424-1	SZ3, Rec,121/150/59/11Q11/11Q11/6Q6,NG	150	150	59	11Q11	11Q11	6Q6
2221473-1	SZ1, Rec Assy,30T2/60/4,SZ12	30T2	60	C4			
2221549-2	ARINC600,RCPT ASSY,SZ2,60/60/100, NG	60	60	100			
2221614-2	SZ3, Rec,10T10/121/100/121/121/13C2,NG	10T10	121	100	121	121	13C2
2221825-1	SZ2, Rec. Assy,150/126/100,NG	150	126	100			
2221902-1	SZ1, Rec. Assy,60/60/5C2	60	60	5C2			
2221904-1	SZ2, Rec. Assy,150/150/68Q2	150	150	68Q2			
2221905-1	SZ2, Rec. Assy,150/150/85	150	150	85			
2221906-1	SZ2, Rec. Assy,150/150/13C2	150	150	13C2			
2221908-1	SZ2, Rec. Assy,150/150/13C2	150	150	13C2			
2221951-3	SZ2, Rec. Assy,150/121/13C2 NG	150	121	13C2			
2221968-2	A600, Rec. Assy,SZ2, (C4/120T2/13C2), NG	C4	120T2	13C2			
2221981-1	SZ3, REC, 150/150/13C2/150/150/68Q2, NG	150	150	13C2	150	150	68Q2
2286064-1	ARINC600 RECEPT ASSY 150/150/13C2	150	150	13C2			
2286150-1	120T2/11Q11/11Q2 RECEPT	120T2	11Q11	11Q2			
2286395-1	ARINC600 RECEPT 121/150/6Q6	121	150	6Q6			
2286543-1	150/110/11Q2 SELECT LOAD	150	110	11Q2			

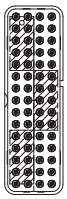

60 pos

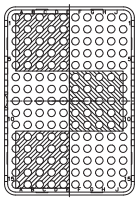

150 pos

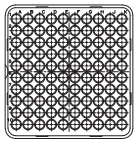

100 pos

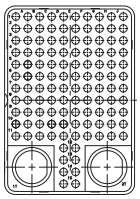

120 T2

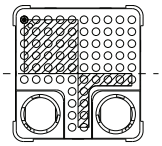

68Q2

Dimensions are shown for reference purposes only. Specifications subject to change.

Dimensions are in millimeters unless otherwise specified.

USA: +1 800 522 6752
Asia Pacific: +86 0 400 820 6015
UK: +44 800 267 666

For additional support numbers please visit www.te.com

Ordering Information

Descriptive Part Numbering System

Use this guide to construct descriptive part numbers for ARINC 600 Connectors. Consult the referenced pages for additional information.

Materials

Shell — Die cast aluminum or machined aluminum per ASTM-B-85

Insert Retention Plates — Aluminum alloy

Finish — Chemical conversion coating per MIL-C-5541, Class 1A or 3 or electroless nickel per MIL-C-26074, Class 3 or 4, Grade B

Screws and Lockwashers — Steel with chromate over zinc or stainless steel

Polarizing Keyways — Zinc alloy

Polarizing Posts — Aluminum alloy or stainless steel

Insulators — Thermoset or Thermoplastic

Sample Descriptive Part Number

NIC66 E 11 A 01 AA 1

Series Designation
All ARINC 600 Connectors (For "Single Mod" ARINC Connectors, see page 4-28.)

Shell Size/Plating
(See pages 4-6 through 4-9)

Shells With Chromate Conversion Coating
E—Size 1 Receptacle
F—Size 1 Plug
G—Size 2 Receptacle
H—Size 2 Plug
J—Size 3 Receptacle
K—Size 3 Plug

Shells With Electroless Nickel Plating
EN—Size 1 Receptacle
FN—Size 1 Plug
GN—Size 2 Receptacle
HN—Size 2 Plug
JN—Size 3 Receptacle
KN—Size 3 Plug

Contact Inserts & Arrangement Codes
(See pages 4-10 through 4-13) Describes size, number of contacts, style of contacts and arrangement of inserts. Insert styles are further defined by both Class and Contact Style/Shell Modifications below. Insert arrangement codes are not defined for connectors using either Quadrax or Expanded Beam Fiber Optic inserts. Contact TE Connectivity for specific part numbers.

Class
A—Nonenvironmental, rear release (unsealed inserts)
B—Environmental, rear release (sealed inserts)
C—Environmental, rear release without O-ring or sealant around inserts (sealed inserts)
F—Class C with cantilever style EMI/grounding spring (plug connectors only)
G—Class A with cantilever style EMI/grounding spring (plug connectors only)
H—Class C with canted coil style EMI/grounding spring (plug connectors only)
J—Class A with canted coil style EMI/grounding spring (plug connectors only)
FA—Nonenvironmental, front release/remove size 22 contacts (other contact sizes rear release/remove)
FF—Nonenvironmental, all contact sizes front release/remove except size 1 COAX remains rear removal

Keying
(See pages 4-15 and 4-16) Describes arrangement of keys

Contact Style/Shell Modifications
(See pages 4-17 and 4-18) Describes connector mounting configuration and contact style. The insert style is further modified by the contact style specified. Even when the connectors are ordered unloaded, the appropriate code must be used so that contacts fit properly.

Contact Loading
0—Contacts included with connector, as indicated in contact style code above (no digit in this space also indicates connector includes contacts). COAXICON contacts must always be ordered separately.
1—Contacts not included with connector; must be ordered separately by TE Part Number.

Catalog 1308940
Revised 9-14

www.te.com

Dimensions are shown for reference purposes only. Specifications subject to change.

Dimensions are in millimeters unless otherwise specified.

USA: +1 800 522 6752
Asia Pacific: +86 0 400 820 6015
UK: +44 800 267 666

For additional support numbers please visit www.te.com

Shell Size 1

Receptacle

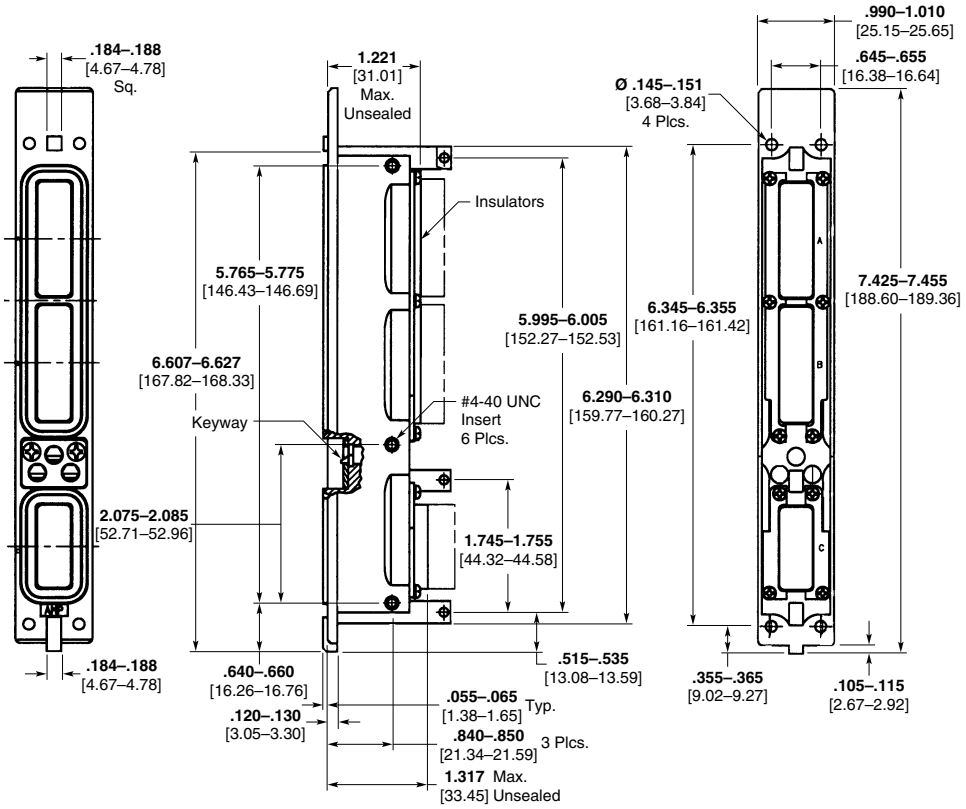

Plug

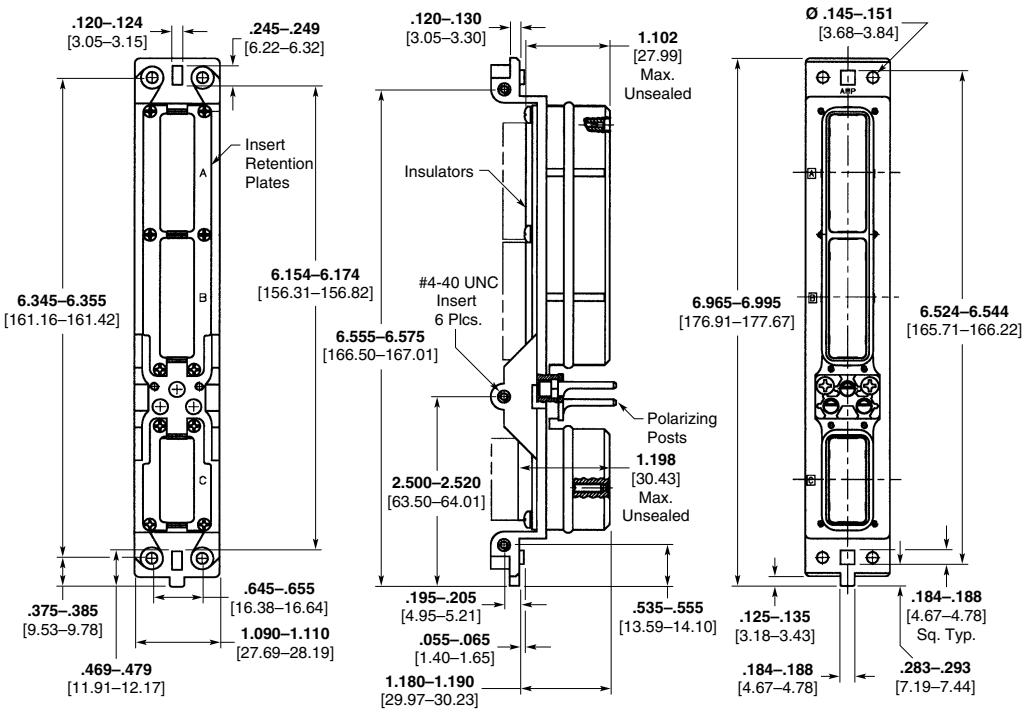

Catalog 1308940
Revised 9-14

www.te.com

Dimensions are shown for reference purposes only. Specifications subject to change.

Dimensions are in millimeters unless otherwise specified.

USA: +1 800 522 6752
Asia Pacific: +86 0 400 820 6015
UK: +44 800 267 666

For additional support numbers please visit www.te.com

Shell Size 2

Receptacle

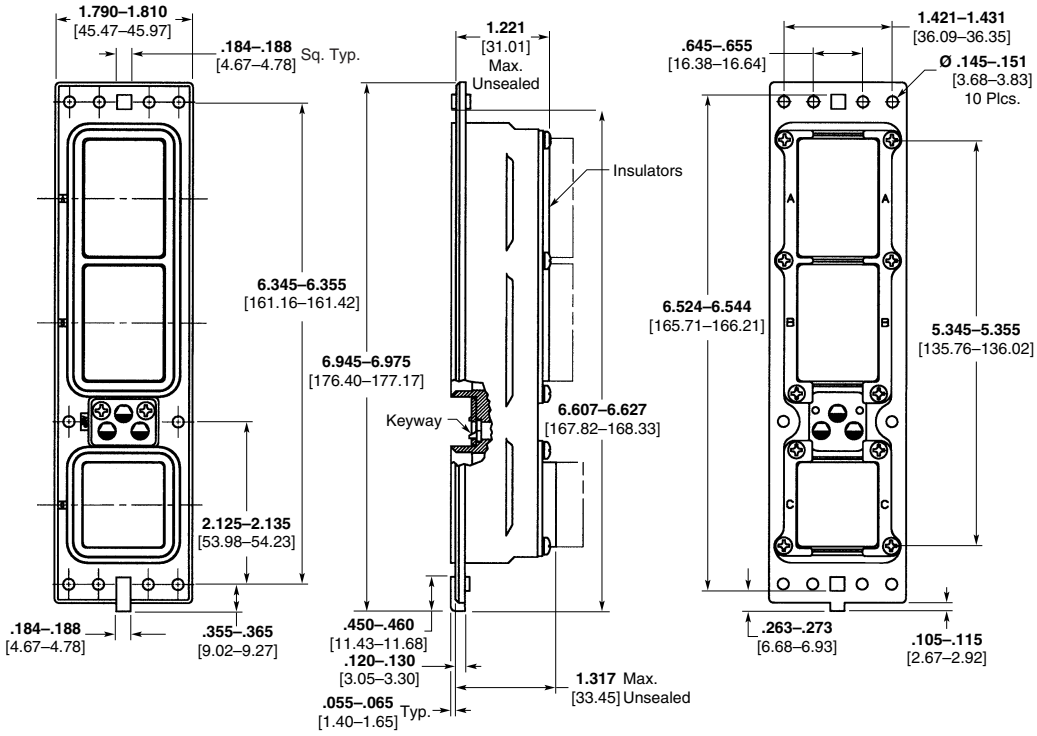

Plug

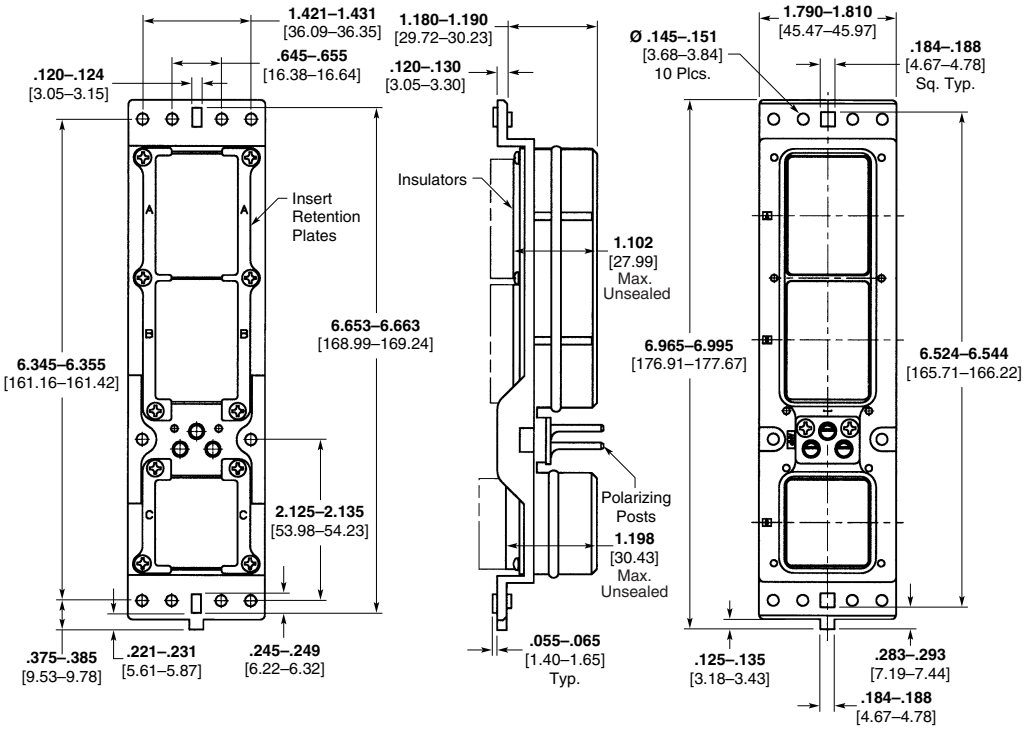

Catalog 1308940
Revised 9-14

www.te.com

Dimensions are shown for reference purposes only. Specifications subject to change.

Dimensions are in millimeters unless otherwise specified.

USA: +1 800 522 6752
Asia Pacific: +86 0 400 820 6015
UK: +44 800 267 666

For additional support numbers please visit www.te.com

Shell Size 3

Receptacle

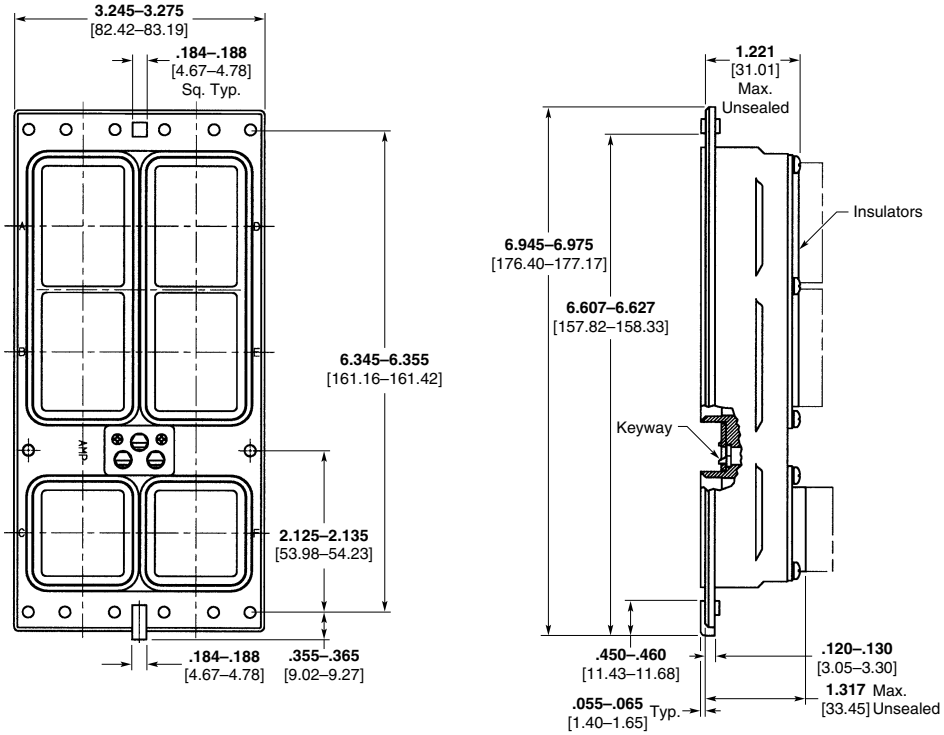

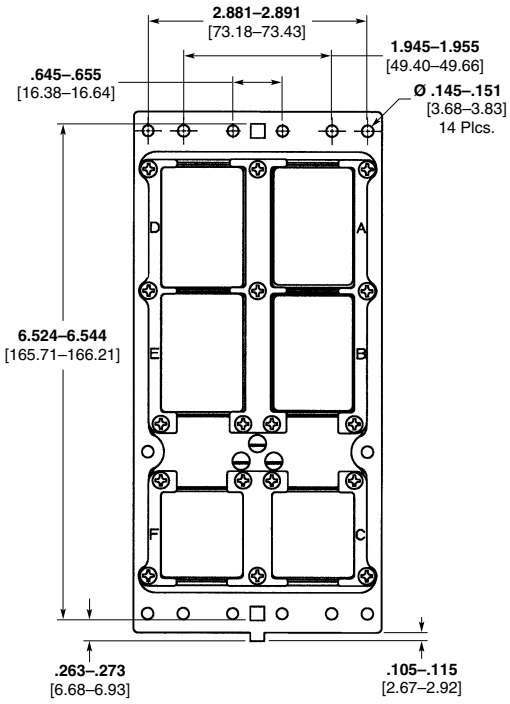

Shell Size 3 (Continued)

Plug

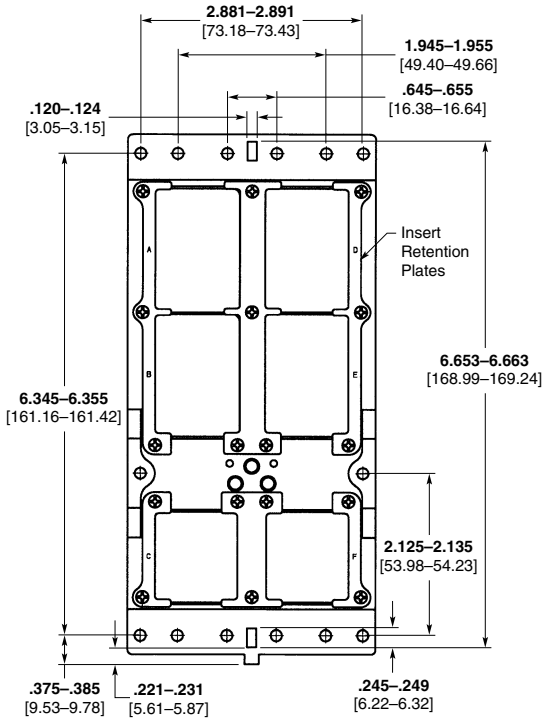

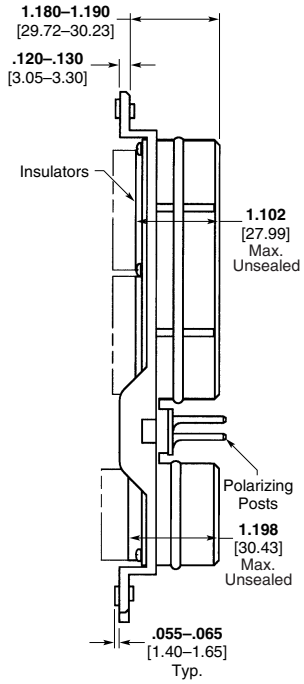

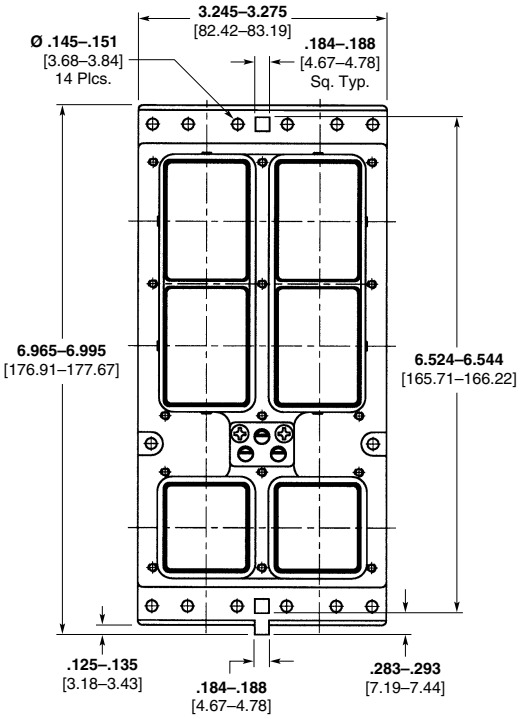

Dimensions are shown for reference purposes only. Specifications subject to change.

Dimensions are in millimeters unless otherwise specified.

USA: +1 800 522 6752
Asia Pacific: +86 0 400 820 6015
UK: +44 800 267 666

For additional support numbers please visit www.te.com

Contact Inserts and Arrangement Codes

Shell Size 1

Note: For Expanded Beam Fiber Optic Inserts, see page 4-14.

Shell Module A or B

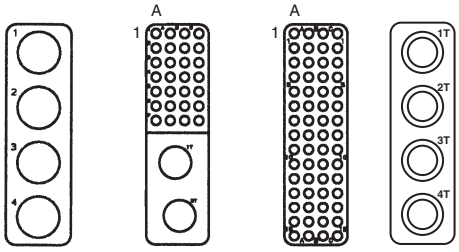

4C4
4 Size 5
Metal

30T2
28 Size 22
2 Size 8

60
60 Size 22

4T4
4 Size 8
Metal

(Size 8 Grounded to Shell)

Shell Module C

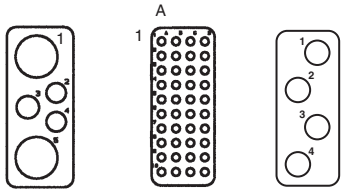

5C2
2 Size 16
1 Size 12
2 Size 5

40
40 Size 22

4
4 Size 12

Shell Size 1 Plug
Rear Release/Remove Contacts

Shell Module A or B

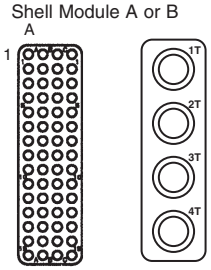

60
60 Size 22
Metal

4T4
4 Size 8
Metal

Shell Module C

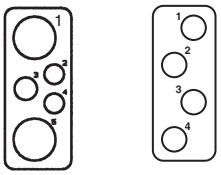

5C2
2 Size 16
1 Size 12
2 Size 5
(Also Available with Ground for Size 5's)

4
4 Size 12

Shell Size 1 Receptacle
Rear Release/Remove Contacts

Shell Module A or B

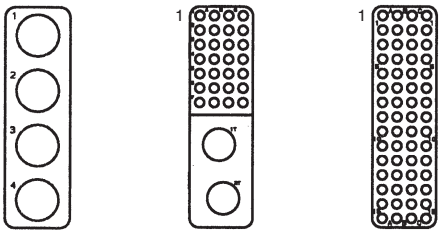

4C4
4 Size 5

30T2
28 Size 22
2 Size 8
(Size 8 Grounded to Shell)

60
60 Size 22

Shell Module C

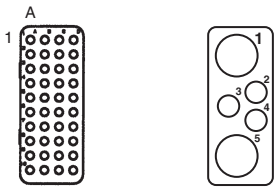

40
40 Size 22

5C2
All FR/FR

Shell Size 1 Receptacle
Front Release/Remove Size 22 Contacts (Other Size Contacts are Rear Release/Remove)

Shell Size	Arrangement Code	Module A	Module B	Module C
1	11	60	60	5C2
1	12	60	BLANK	BLANK
1	13	BLANK	60	BLANK
1	14	BLANK	60	5C2
1	15	60	60	40
1	16	OPEN	60	5C2
1	71	30T2	30T2	40
1	102	60	60	OPEN
1	104	60	OPEN	5C2
1	105	OPEN	OPEN	5C2
1	106	60	4C4	40
1	107	30T2	30T2	40
1	110	60	60	4
1	111	OPEN	30T2	40
1	112	60	4C4	5C2
1	113	60	OPEN	OPEN

Arrangement codes not shown are available upon request. Contact TE Connectivity.

Dimensions are shown for reference purposes only. Specifications subject to change.

Dimensions are in millimeters unless otherwise specified.

USA: +1 800 522 6752
Asia Pacific: +86 0 400 820 6015
UK: +44 800 267 666

For additional support numbers please visit www.te.com

Contact Inserts and Arrangement Codes (Continued)

Shell Size 2 or 3

Note: For ARINC 801 Inserts and Expanded Beam Fiber Optic Inserts, see page 4-14.

Shell Module A, B, D or E

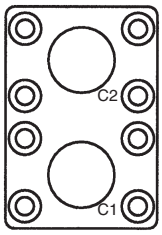

C2 [2, 5]
2 Size 1

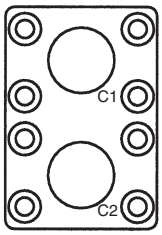

C2A [2, 5]
2 Size 1

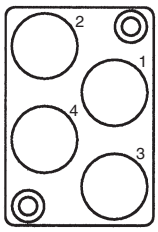

C4 [1, 5]
4 Modified Size 1 Metal

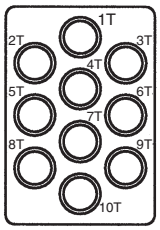

10T10 [1, 4, 5]
10 Size 8 Metal

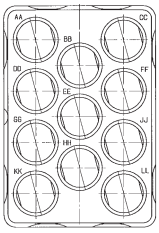

Q11 [1, 4, 6]
11 Size 8 Quadrax
Metal

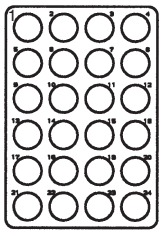

24 [1]
24 Size 12

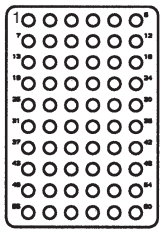

60 [2, 4]
60 Size 20

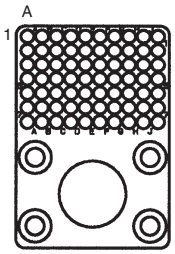

71C1 [2, 3]
70 Size 22
1 Size 1

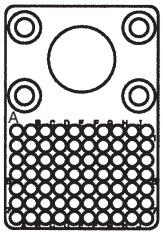

71C1A [2, 3]
70 Size 22
1 Size 1

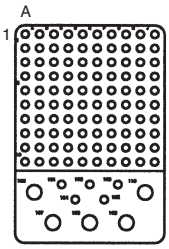

110 [2, 4]
100 Size 22
5 Size 20
5 Size 12

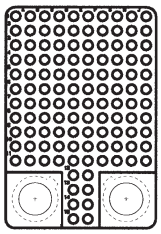

118Q2 [2, 4, 6]
118 Size 22
2 Size 8 Quadrax

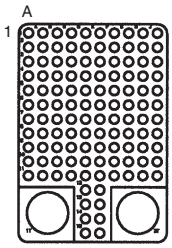

120T2 [2, 3, 4]
118 Size 22
2 Size 8
(Size 8 Grounded to Shell)

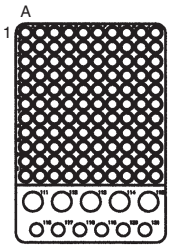

121 [2, 4]
110 Size 22
6 Size 20
5 Size 16 [4]

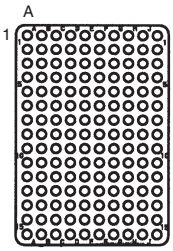

150 [1, 3, 7]
150 Size 22

Shell Module C or F

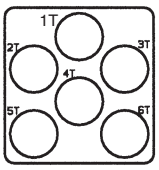

6T6 [2, 4, 5, 6]
6 Size 8
Metal

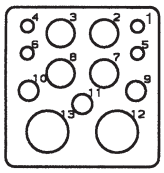

13C2 [1, 4, 8]
4 Size 20
3 Size 16
4 Size 12
2 Size 5

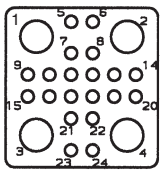

24T4 [2, 6]
20 Size 20
4 Size 8

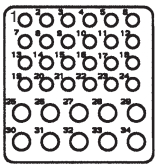

34 [2, 4]
24 Size 20
10 Size 16

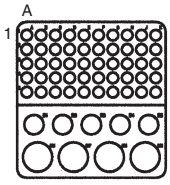

59 [2, 4]
50 Size 22
5 Size 16
4 Size 12

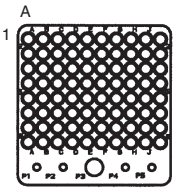

85 [2, 3, 4]
80 Size 22
4 Size 20
1 Size 16

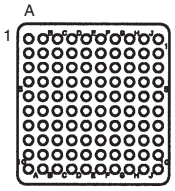

100 [1, 3]
100 Size 22

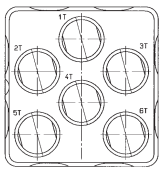

Q6 [1, 4, 6]
6 Size 8 Quadrax
Metal

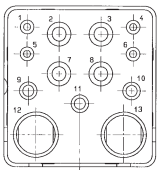

11Q2 [1, 4, 6]
4 Size 20
4 Size 12
3 Size 16
2 Size 8 Quadrax

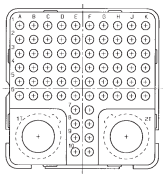

70Q2 [1, 4, 6]
68 Size 22
2 Size 8 Quadrax

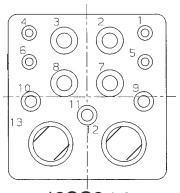

13CQ2 [4, 6]
4 Size 20
3 Size 16
4 Size 12
2 Size 8 Quadrax

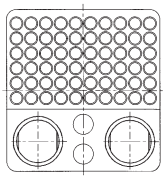

64Q2 [2, 4, 6]
60 Size 22
2 Size 16
2 Size 8 Quadrax

Notes:
1. Available for plug or receptacle with rear release/remove contacts.
2. Available for plug only with rear release/remove contacts.
3. Available for receptacle only with front release/remove size 22 contacts and rear release/remove other size contacts.
4. Available for receptacle only with all contacts front release/remove.
5. Available for receptacle only with all contacts front release/rear remove.
6. Standard size 8 contacts will not fit in Quadrax size 8 inserts. Also, Quadrax size 8 contacts will not fit into standard size 8 inserts.
7. Available for plug with front release/remove contacts.
8. Available with grounding for size 5's.

Note: Engaging faces of receptacle inserts are shown

Dimensions are shown for reference purposes only. Specifications subject to change.

Dimensions are in millimeters unless otherwise specified.

USA: +1 800 522 6752
Asia Pacific: +86 0 400 820 6015
UK: +44 800 267 666

For additional support numbers please visit www.te.com

Contact Inserts and Arrangement Codes (Continued)

Shell Size 2

Shell Size	Arrangement Code	Module A	Module B	Module C
2	20	71C1A	71C1	13C2
2	21	150	150	13C2
2	22	71C1	150	13C2
2	23	71C1	71C1	13C2
2	25	150	71C1	13C2
2	26	150	150	100
2	27	C2	71C1	13C2
2	28	C2	71C1A	85
2	29	150	150	BLANK
2	30	71C1A	71C1A	13C2
2	50	71C1	71C1A	13C2
2	51	BLANK	150	13C2
2	52	150	150	85
2	53	C4	150	13C2
2	54	150	73C3	13C2
2	55	150	BLANK	13C2
2	56	150	C2	13C2
2	57	24	150	13C2
2	58	24	24	6T6
2	59	C4	C4	13C2
2	72	120T2	120T2	100
2	74	121	121	6T6
2	75	121	10T10	6T6
2	80	120T2	150	100
2	81	120T2	120T2	6T6
2	82	71C1A	150	13C2
2	83	150	C4	34
2	84	C4	C4	34
2	85	150	150	34
2	86	150	121	100
2	207	71C1	150	100
2	208	150	71C1	100
2	209	71C1	71C1	100
2	212	71C1	71C1	OPEN
2	216	C2A	71C1A	85
2	220	71C1	C2A	85
2	234	60	60	13C2
2	237	150	120T2	100
2	240	120T2	10T10	13C2
2	241	150	150	6T6

Shell Size	Arrangement Code	Module A	Module B	Module C
2	242	150	10T10	13C2
2	245	71C1	71C1	85
2	253	C2A	150	13C2
2	254	C2A	71C1A	100
2	255	C2A	71C1A	13C2
2	256	C2A	71C1	13C2
2	257	C2A	C2A	13C2
2	259	C4	C4	85
2	262	150	60	34
2	266	121	121	85
2	268	60	121	59
2	269	10T10	150	13C2
2	270	150	150	59
2	271	C4	120T2	13C2
2	272	10T10	10T10	85
2	273	121	60	6T6
2	275	121	60	34
2	279	150	121	13C2
2	284	120T2	120T2	13C2
2	286	60	60	34
2	287	150	121	59
2	288	150	11Q11	13C2
2	289	C4	60	100
2	290	150	150	68Q2
2	291	121	121	59
2	292	121	121	6Q6
2	293	121	11Q11	6Q6
2	294	C4	11Q11	59
2	295	11Q11	150	13C2
2	296	11Q11	11Q11	11Q2
2	297	11Q11	60	68Q2
2	298	120T2	BLANK	85
2	299	F36	150	85
2	300	120T2	120T2	11Q2
2	401	150	100	11Q2
2	402	150	60	100
2	403	71C1A	118Q2	12F5C2
2	404	11Q11	150	59
2	405	24	24	100
2	406	120T2	150	13C2

Note: Arrangement codes not shown are available upon request. Contact TE Connectivity.

Contact Inserts and Arrangement Codes (Continued)

Shell Size 3

Shell Size	Arrangement Code	Module A	Module B	Module C	Module D	Module E	Module F
3	31	150	150	13C2	150	150	13C2
3	32	150	150	100	150	150	13C2
3	33	150	150	13C2	150	150	100
3	34	150	150	100	150	150	100
3	36	C4	C4	13C2	BLANK	150	100
3	37	150	150	85	150	150	85
3	76	120T2	150	34	120T2	150	34
3	77	121	121	6T6	121	121	6T6
3	306	150	71C1	13C2	150	71C1	13C2
3	307	71C1	71C1	13C2	71C1	71C1	13C2
3	308	C2A	C2A	13C2	C2A	150	100
3	309	150	150	13C2	150	71C1	100
3	319	121	120T2	6T6	121	120T2	6T6
3	320	150	60	100	150	60	100
3	322	150	150	100	150	150	34
3	323	150	150	100	71C1	71C1	100
3	325	150	150	13C2	C2A	C2A	13C2
3	326	150	71C1	100	150	150	100
3	327	150	71C1	100	150	150	13C2
3	328	C2A	C2A	13C2	150	150	13C2
3	331	71C1	150	100	150	150	100
3	332	C4	C4	13C2	C4	C4	85
3	333	71C1	71C1	100	71C1	71C1	100
3	335	71C1	C4	100	71C1	C4	100
3	338	C2A	150	100	150	150	100
3	339	C2A	C2A	100	C2A	C2A	100
3	340	C2A	C2A	13C2	C2A	C2A	13C2
3	341	C4	C4	100	C4	C4	100
3	342	C4	C4	13C2	C4	C4	13C2
3	344	24	150	13C2	24	150	13C2
3	346	150	24	100	150	150	34
3	347	150	150	6T6	121	10T10	13C2
3	348	150	150	11Q2	150	150	11Q2
3	349	150	150	13C2	120T2	120T2	100
3	350	C4	C4	13C2	150	150	100
3	351	150	150	13C2	150	6MS	BLANK
3	352	150	150	59	150	6MS	BLANK
3	353	150	150	59	150	6MS	100
3	354	150	150	59	150	150	59
3	355	150	150	59	150	150	100
3	356	150	150	34	150	150	34
3	357	24	24	34	150	150	100
3	358	C4	120T2	100	150	150	13C2
3	359	11Q11	11Q11	6Q6	11Q11	11Q11	6Q6
3	360	11Q11	11Q11	100	11Q11	121	6Q6
3	361	11Q11	150	11Q2	150	150	68Q2
3	362	110	11Q11	6Q6	24	150	6Q6
3	363	150	120T2	100	150	120T2	59
3	364	C4	118Q2	11Q2	C4	118Q2	11Q2
3	365	11Q11	11Q11	85	11Q11	11Q11	85

Note: Arrangement codes not shown are available upon request. Contact TE Connectivity.

Fiber Optic Inserts and Cavity Reducers

Inserts available to accept TE Connectivity Mini-Expanded Beam Fiber Optic Cable Assemblies and ARINC 801 1.25mm Optical Termini. Custom design configurations can be provided.

Contact TE for more information about Fiber Optic Connectors and Cable Assemblies, see Section 3.

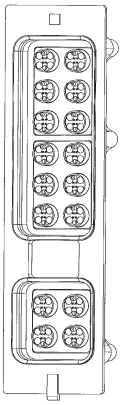

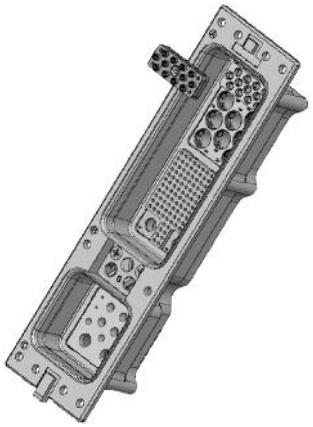

Product Facts

- **For Mini-Expanded Beam inserts**
- **Insert holders designed to ARINC 600, Supplement 18 or to specific customer needs**
- **For use in 100 base-FX Ethernet LAN applications per ARINC 664 and 763**
- **Drop-in insert holders utilize standard ARINC 600 retainers**
- **Sealing available**

Mini-Expanded Beam

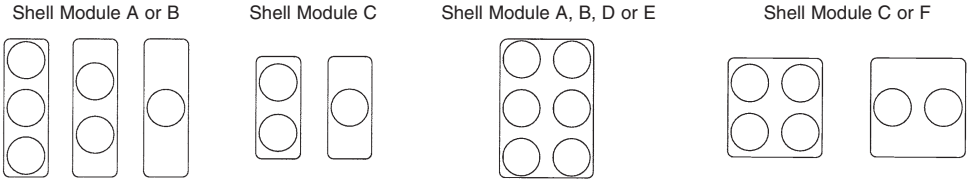

ARINC 801 Inserts

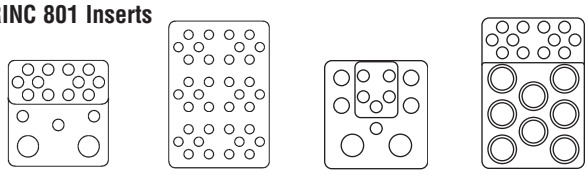

ARINC 801 Inserts and Cavity Reducers accept ARINC 801 Fiber Optic Termini.

ARINC 801 Optical Termini

Product Facts

- **Optical termini for use with GPR, ARINC 600, circular MIL-DTL-38999 connectors**
- **Industry Standard 1.25mm ceramic ferrule**
- **Compatible with 1.5-2.2mm Tight jacket and loose tube cable construction:**
  - **MT - Tight jacket cable**
  - **ML - Loose tube cable**
- **SM / MM versions**

ARINC 801 Cavity Reducers

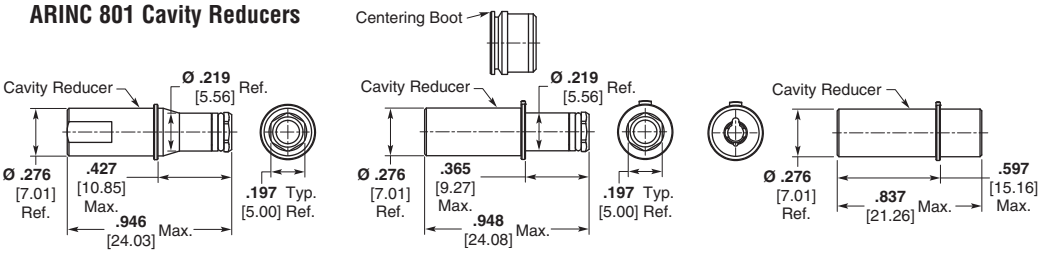

Part Number 1757727-1 | Part Number 1757710-1 | Part Number 1757711-1

Size 8 Quadrax	Part Number	ARINC 801 Cavity Reducer
Pin Quadrax adapter for ARINC 801 termini in Quadrax FR type cavity	1757727-1	Quadrax cavity reducer (FR/FR) for receptacle shell
Pin Quadrax adapter for ARINC 801 termini in Quadrax RR type cavity	1757710-1	Quadrax cavity reducer (RR/RR) for receptacle shell
Socket Quadrax adapter for ARINC 801 termini in Quadrax RR type cavity	1757711-1	Quadrax cavity reducer (RR/RR) for plug shell

ARINC 801 Optical Termini Part Numbers

Cable Dia.	Cable Structure ML (loose & tight) MT (ultra tight)	S/M Fiber 125,3 µm PC/UPC	S/M Fiber 125,3 µm APC	M/M Fiber 128 µm PC
0.9mm Buffer	—	*	*	*
1.5 - 2.2mm	ML	1918614-1	1918616-1	1828199-1
1.5 - 2.2mm	MT	1918615-1	1918617-1	1828200-1

Consult your local TE Sales Representative for additional options.
* Contact TE for availability.

Catalog 1308940
Revised 9-14

www.te.com

Dimensions are shown for reference purposes only. Specifications subject to change.

Dimensions are in millimeters unless otherwise specified.

USA: +1 800 522 6752
Asia Pacific: +86 0 400 820 6015
UK: +44 800 267 666

For additional support numbers please visit www.te.com

Keying

Notes:
1. Darkened portion of diagram indicates extended post of plug key; light portion indicates key hole in receptacle keyway.
2. If the keying code is omitted, keying is assembled in the **01** arrangement; the keying code is not stamped on the connector.
3. If the keying code is **00**, keying is supplied unassembled.
4. Diagrams show mating face of connector, "Top" up.

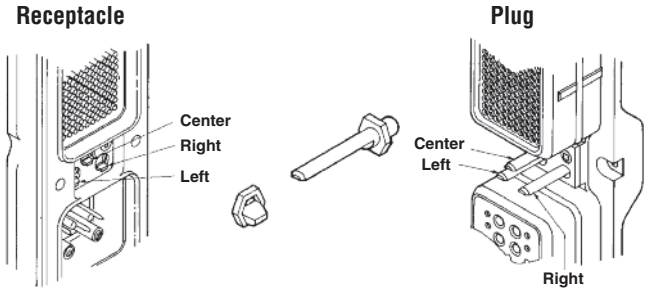

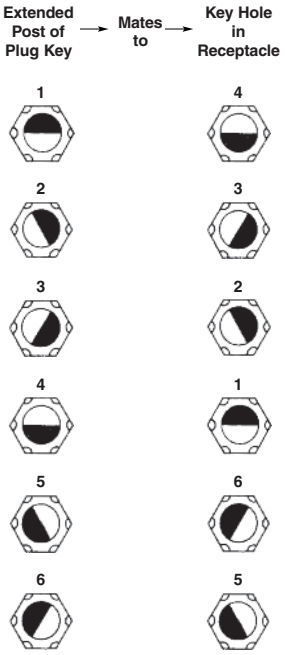

Keying Components	Quantity Required Per Connector	Part Numbers	
		Receptacle	Plug
Male Key Post	3	—	1218693-2
Female Keyway	3	208019-1	—
Plate	1	1218692-1	1218692-1
Screw	2	208021-1	208021-1
Kit Containing Above	1	448013-1	448012-1

Keying Code	Plug			Receptacle		
	Left Post	Center Post	Right Post	Left Keyway	Center Keyway	Right Keyway
00	—	—	—	—	—	—
01	1	1	1	4	4	4
02	2	1	1	4	4	3
03	3	1	1	4	4	2
04	4	1	1	4	4	1
05	5	1	1	4	4	6
06	6	1	1	4	4	5
07	1	1	6	5	4	4
08	2	1	6	5	4	3
09	3	1	6	5	4	2
10	4	1	6	5	4	1
11	5	1	6	5	4	6
12	6	1	6	5	4	5
13	1	1	5	6	4	4
14	2	1	5	6	4	3
15	3	1	5	6	4	2
16	4	1	5	6	4	1
17	5	1	5	6	4	6
18	6	1	5	6	4	5
19	1	1	4	1	4	4
20	2	1	4	1	4	3
21	3	1	4	1	4	2
22	4	1	4	1	4	1
23	5	1	4	1	4	6
24	6	1	4	1	4	5
25	1	1	3	2	4	4
26	2	1	3	2	4	3
27	3	1	3	2	4	2
28	4	1	3	2	4	1
29	5	1	3	2	4	6
30	6	1	3	2	4	5
31	1	1	2	3	4	4
32	2	1	2	3	4	3
33	3	1	2	3	4	2
34	4	1	2	3	4	1
35	5	1	2	3	4	6
36	6	1	2	3	4	5
37	1	2	1	4	3	4
38	2	2	1	4	3	3

Keying Code	Plug			Receptacle		
	Left Post	Center Post	Right Post	Left Keyway	Center Keyway	Right Keyway
39	3	2	1	4	3	2
40	4	2	1	4	3	1
41	5	2	1	4	3	6
42	6	2	1	4	3	5
43	1	2	6	5	3	4
44	2	2	6	5	3	3
45	3	2	6	5	3	2
46	4	2	6	5	3	1
47	5	2	6	5	3	6
48	6	2	6	5	3	5
49	1	2	5	6	3	4
50	2	2	5	6	3	3
51	3	2	5	6	3	2
52	4	2	5	6	3	1
53	5	2	5	6	3	6
54	6	2	5	6	3	5
55	1	2	4	1	3	4
56	2	2	4	1	3	3
57	3	2	4	1	3	2
58	4	2	4	1	3	1
59	5	2	4	1	3	6
60	6	2	4	1	3	5
61	1	2	3	2	3	4
62	2	2	3	2	3	3
63	3	2	3	2	3	2
64	4	2	3	2	3	1
65	5	2	3	2	3	6
66	6	2	3	2	3	5
67	1	2	2	3	3	4
68	2	2	2	3	3	3
69	3	2	2	3	3	2
70	4	2	2	3	3	1
71	5	2	2	3	3	6
72	6	2	2	3	3	5
73	1	3	1	4	2	4
74	2	3	1	4	2	3
75	3	3	1	4	2	2
76	4	3	1	4	2	1
77	5	3	1	4	2	6

Catalog 1308940
Revised 9-14

www.te.com

Dimensions are shown for reference purposes only. Specifications subject to change.

Dimensions are in millimeters unless otherwise specified.

USA: +1 800 522 6752
Asia Pacific: +86 0 400 820 6015
UK: +44 800 267 666

For additional support numbers please visit www.te.com

Keying (Continued)

Keying Code	Plug			Receptacle		
	Left Post	Center Post	Right Post	Left Keyway	Center Keyway	Right Keyway
78	6	3	1	4	2	5
79	1	3	6	5	2	4
80	2	3	6	5	2	3
81	3	3	6	5	2	2
82	4	3	6	5	2	1
83	5	3	6	5	2	6
84	6	3	6	5	2	5
85	1	3	5	6	2	4
86	2	3	5	6	2	3
87	3	3	5	6	2	2
88	4	3	5	6	2	1
89	5	3	5	6	2	6
90	6	3	5	6	2	5
91	1	3	4	1	2	4
92	2	3	4	1	2	3
93	3	3	4	1	2	2
94	4	3	4	1	2	1
95	5	3	4	1	2	6
96	6	3	4	1	2	5
97	1	3	3	2	2	4
98	2	3	3	2	2	3
99	3	3	3	2	2	2
100	4	3	3	2	2	1
101	5	3	3	2	2	6
102	6	3	3	2	2	5
103	1	3	2	3	2	4
104	2	3	2	3	2	3
105	3	3	2	3	2	2
106	4	3	2	3	2	1
107	5	3	2	3	2	6
108	6	3	2	3	2	5
109	1	4	1	4	1	4
110	2	4	1	4	1	3
111	3	4	1	4	1	2
112	4	4	1	4	1	1
113	5	4	1	4	1	6
114	6	4	1	4	1	5
115	1	4	6	5	1	4
116	2	4	6	5	1	3
117	3	4	6	5	1	2
118	4	4	6	5	1	1
119	5	4	6	5	1	6
120	6	4	6	5	1	5
121	1	4	5	6	1	4
122	2	4	5	6	1	3
123	3	4	5	6	1	2
124	4	4	5	6	1	1
125	5	4	5	6	1	6
126	6	4	5	6	1	5
127	1	4	4	1	1	4
128	2	4	4	1	1	3
129	3	4	4	1	1	2
130	4	4	4	1	1	1
131	5	4	4	1	1	6
132	6	4	4	1	1	5
133	1	4	3	2	1	4
134	2	4	3	2	1	3
135	3	4	3	2	1	2
136	4	4	3	2	1	1
137	5	4	3	2	1	6
138	6	4	3	2	1	5
139	1	4	2	3	1	4
140	2	4	2	3	1	3
141	3	4	2	3	1	2
142	4	4	2	3	1	1
143	5	4	2	3	1	6
144	6	4	2	3	1	5
145	1	5	1	4	6	4
146	2	5	1	4	6	3
147	3	5	1	4	6	2
148	4	5	1	4	6	1
149	5	5	1	4	6	6
150	6	5	1	4	6	5
151	1	5	6	5	6	4
152	2	5	6	5	6	3
153	3	5	6	5	6	2
154	4	5	6	5	6	1
155	5	5	6	5	6	6
156	6	5	6	5	6	5
157	1	5	5	6	6	4
158	2	5	5	6	6	3
159	3	5	5	6	6	2
160	4	5	5	6	6	1
161	5	5	5	6	6	6
162	6	5	5	6	6	5
163	1	5	4	1	6	4
164	2	5	4	1	6	3
165	3	5	4	1	6	2
166	4	5	4	1	6	1
167	5	5	4	1	6	6
168	6	5	4	1	6	5
169	1	5	3	2	6	4
170	2	5	3	2	6	3
171	3	5	3	2	6	2
172	4	5	3	2	6	1
173	5	5	3	2	6	6
174	6	5	3	2	6	5
175	1	5	2	3	6	4
176	2	5	2	3	6	3
177	3	5	2	3	6	2
178	4	5	2	3	6	1
179	5	5	2	3	6	6
180	6	5	2	3	6	5
181	1	6	1	4	5	4
182	2	6	1	4	5	3
183	3	6	1	4	5	2
184	4	6	1	4	5	1
185	5	6	1	4	5	6
186	6	6	1	4	5	5
187	1	6	6	5	5	4
188	2	6	6	5	5	3
189	3	6	6	5	5	2
190	4	6	6	5	5	1
191	5	6	6	5	5	6
192	6	6	6	5	5	5
193	1	6	5	6	5	4
194	2	6	5	6	5	3
195	3	6	5	6	5	2
196	4	6	5	6	5	1
197	5	6	5	6	5	6
198	6	6	5	6	5	5
199	1	6	4	1	5	4
200	2	6	4	1	5	3
201	3	6	4	1	5	2
202	4	6	4	1	5	1
203	5	6	4	1	5	6
204	6	6	4	1	5	5
205	1	6	3	2	5	4
206	2	6	3	2	5	3
207	3	6	3	2	5	2
208	4	6	3	2	5	1
209	5	6	3	2	5	6
210	6	6	3	2	5	5
211	1	6	2	3	5	4
212	2	6	2	3	5	3
213	3	6	2	3	5	2
214	4	6	2	3	5	1
215	5	6	2	3	5	6
216	6	6	2	3	5	5

Catalog 1308940
Revised 9-14

www.te.com

Dimensions are shown for reference purposes only. Specifications subject to change.

Dimensions are in millimeters unless otherwise specified.

USA: +1 800 522 6752
Asia Pacific: +86 0 400 820 6015
UK: +44 800 267 666

For additional support numbers please visit www.te.com

Contact Style/Shell Modification Codes

AA Crimp, Snap-In Contacts, Rear Release, Standard Mounting
AB .025 [0.64] Square Post — 208215-1 Contacts, 1-Wrap High, Snap-In, Standard Mounting
AC .025 [0.64] Square Post — 208215-2 Contacts, 2-Wrap High, Snap-In, Standard Mounting
AD .025 [0.64] Square Post — 208215-3 Contacts, 3-Wrap High, Snap-In, Standard Mounting
BA (4) Floating Bushings

#6-32 Clinch Nuts, see Table 1 on page 4-18 for clinch nut locations
CA (10) #6-32 Clinch Nuts
CB (4) #6-32 Clinch Nuts
CC (6) #6-32 Clinch Nuts
CD (8) #6-32 Clinch Nuts
CE (14) #6-32 Clinch Nuts

Captivated Contact Codes
DA Captivated Inserts — No Contacts
DF 208275-7 (.150 [3.81] Extension), Standard Mounting
DG 208275-3 (.190 [4.83] Extension), Standard Mounting
DH 208275-4 (.250 [6.35] Extension), Standard Mounting

Clinch Nuts with Captivated Contacts, see Table 1 on page 4-18 for clinch nut locations
EA (4) #6-32 Clinch Nuts, and 208275-7 Signal Contacts
EB (4) #6-32 Clinch Nuts, and 208275-3 Signal Contacts
EC (4) #6-32 Clinch Nuts, and 208275-4 Signal Contacts

Front Release, standard mounting
FA Indicates Front Release Inserts without Contacts
FB Standard Mounting, 211245-2 Contacts
FC Standard Mounting, 211245-4 Contacts
FD Standard Mounting, 211245-6 Contacts
FE Standard Mounting, 211431-2 Contacts
FF Standard Mounting, 211431-4 Contacts
FG Standard Mounting, 211431-6 Contacts
FH Standard Mounting, 211431-8 Contacts

Front Release Contacts and Clinch Nuts, see Table 1 on page 4-18 for clinch nut locations
GA (4) #4-40 Clinch Nuts, 211431-4 Contacts
GB (6) #4-40 Clinch Nuts, 211431-4 Contacts
GC (6) #4-40 Clinch Nuts, 211431-6 Contacts
GD (6) #6-32 Clinch Nuts, 211431-4 Contacts
GE (10) #4-40 Clinch Nuts, 211431-8 Contacts
GF (6) #6-32 Clinch Nuts, 211431-2 Contacts
GG (4) #4-40 Clinch Nuts, 211431-2 Contacts
GH (4) #6-32 Clinch Nuts, 211431-2 Contacts
GJ (6) #6-32 Clinch Nuts, 211431-8 Contacts
GK (4) #6-32 Clinch Nuts, 211431-8 Contacts
GL (10) #6-32 Clinch Nuts, 211431-4 Contacts
GM (4) #6-32 Clinch Nuts, 211431-4 Contacts
GN (4) #6-32 Clinch Nuts, 211245-2 Contacts
FJ (10) #6-32 Clinch Nuts, 211245-4 Contacts
FK (6) #6-32 Clinch Nuts, 211245-4 Contacts

#4-40 Clinch Nuts, see Table 1 on page 4-18 for clinch nut locations
SA (4) #4-40 Clinch Nuts
SB (6) #4-40 Clinch Nuts
SC (10) #4-40 Clinch Nuts
SD (8) #4-40 Clinch Nuts
SE (14) #4-40 Clinch Nuts
SF (6) #4-40 Clinch Nuts (Special)

Size 1 Receptacle Shell with Lugs Removed, see drawing below. See Table 1 on page 4-18 for clinch nut locations.
HA Size 1 Receptacle Shell
HB Size 1 Receptacle Shell — (4) #4-40 Clinch Nuts
HC Size 1 Receptacle Shell — with 211431-4 contacts, standard mounting

Size 1 Receptacle

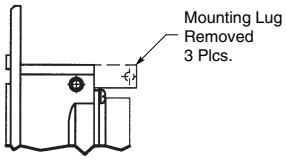

Modification Code
HA, HB, and HC only

Catalog 1308940
Revised 9-14

www.te.com

Dimensions are shown for reference purposes only. Specifications subject to change.

Dimensions are in millimeters unless otherwise specified.

USA: +1 800 522 6752
Asia Pacific: +86 0 400 820 6015
UK: +44 800 267 666

For additional support numbers please visit www.te.com

Contact Style/Shell Modification Codes (Continued)

Table 1

Clinch Nut Locations on Mounting Flange (Unless otherwise noted with modification code)			
Quantity	Shell Size		
	1	2	3
4	All	4 corners	4 corners
6	N/A	4 corners and 2 at polarizing keys	4 corners and 2 at polarizing keys
6 code SF only	N/A	See Figure 3	N/A
8	N/A	See Figure 4	See Figure 1
10	N/A	All	See Figure 2
14	N/A	N/A	All

Size 3 Receptacle

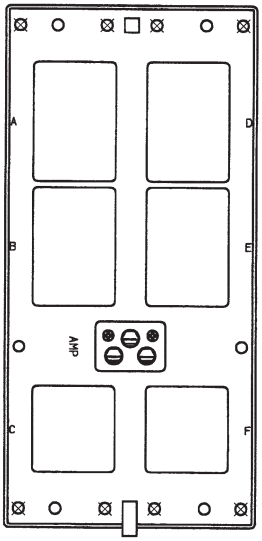

Figure 1
x = Clinch Nut Installed in These Holes

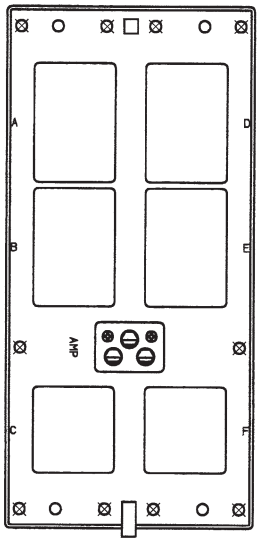

Figure 2
x = Clinch Nut Installed in These Holes

Size 2 Receptacle

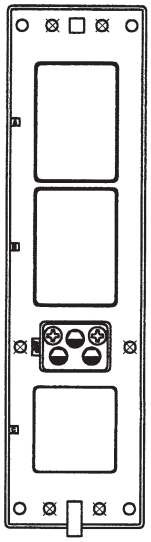

Figure 3
Modification Code SF Only
x = Clinch Nut Installed in These Holes

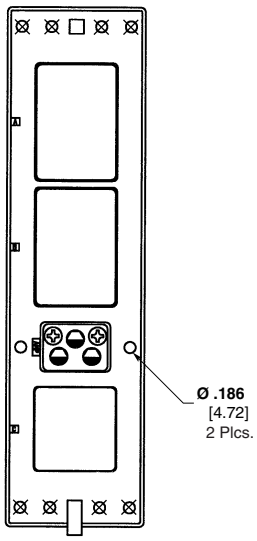

Figure 4
x = Clinch Nut Installed in These Holes

Dimensions are shown for reference purposes only. Specifications subject to change.

Dimensions are in millimeters unless otherwise specified.

USA: +1 800 522 6752
Asia Pacific: +86 0 400 820 6015
UK: +44 800 267 666

For additional support numbers please visit www.te.com

Crimp, Snap-In Contacts

Contact Loading Codes

0 (or blank) — Contacts included

1 — Contacts not included; must be ordered separately by TE Connectivity Part Number.

Note: When connectors are ordered with contacts, the contact style section (AA in the example code at the top of this page) must be specified so that the proper, unloaded inserts are included. COAXICON contacts are not supplied in connector kits and must be ordered separately.

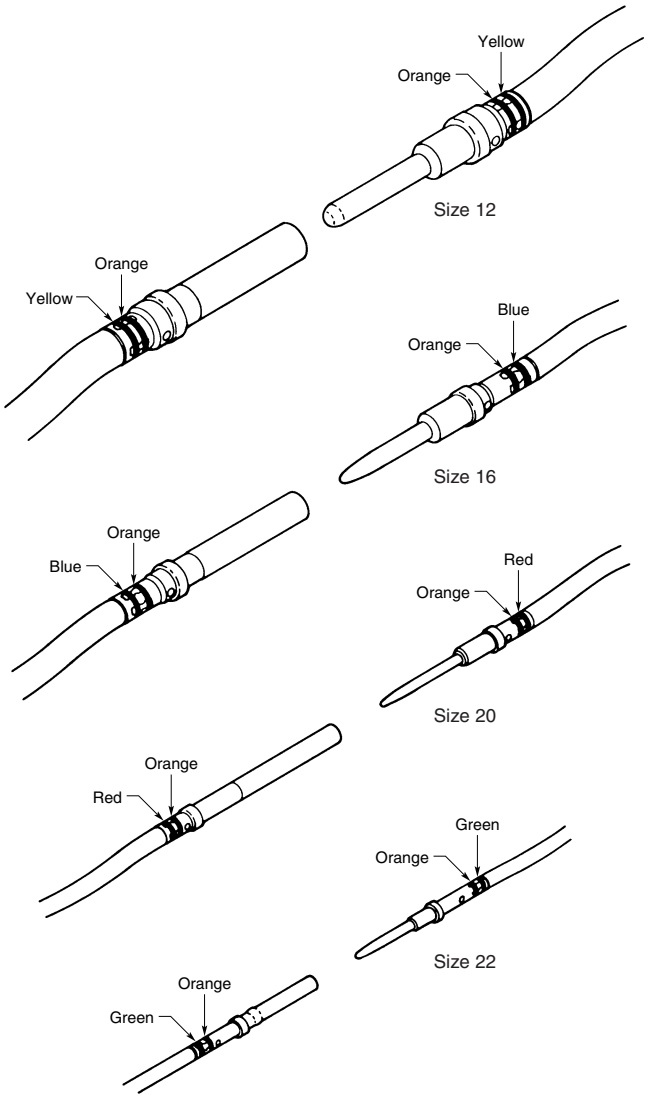

Insertion and Extraction

Typical Tool

Crimp, Snap-In, Rear-Release Contacts (also suitable for ARINC 404)

Average Contact Size	Wire Size		Color Code	Average Engagement Force	Part Numbers		Tooling Part Numbers			Color Code
	AWG	mm²			Pin Contact	Socket Contact	Crimp Tool	Positioner	Insertion/ Extraction Tool	
22	26-22	0.12-0.4	Green	1.5 oz. [.42 N]	208262-3	208264-2	M22520/2-01	M22520/2-23	91066-1	Green
20	24-20	0.2-0.6	Red	2.0 oz. [.56 N]	208265-3	208267-2	M22520/2-01	M22520/2-08	91066-4	Red
16	20-16	0.5-1.4	Blue	3.0 oz. [.83 N]	208268-3	208270-2	M22520/1-01	M22520/1-02	91066-3	Blue
12	14-12	2-3	Yellow	12.0 oz. [3.34 N]	208271-3	208273-2	M22520/1-01	M22520/1-11	445147-1	—

Catalog 1308940
Revised 9-14

www.te.com

Dimensions are shown for reference purposes only. Specifications subject to change.

Dimensions are in millimeters unless otherwise specified.

USA: +1 800 522 6752
Asia Pacific: +86 0 400 820 6015
UK: +44 800 267 666

For additional support numbers please visit www.te.com

Posted Contacts

Size 22 Posted Contacts

Contact Loading

0 (or blank) — Contacts included

1 — Contacts not included; must be ordered separately.

Square or Rounded Posts

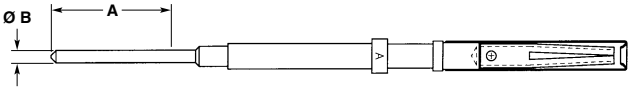

Round Post

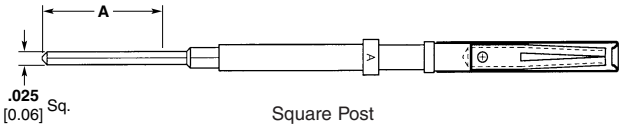

Square Post

Size 22, Snap-In, Rear Release Socket Contacts

Use Insertion/Extraction Tool Part Number 91066-1

with .025 [0.64] Square Posts

Number of Wraps	Post Extension from Rear of Insert (Dim. A)	Part Number
1	**0.275** 6.98	208215-1
2	**0.390** 9.91	208215-2
3	**0.520** 13.21	208215-3

with Round Posts

Minimum Post Extension from Rear (Dim. A)	Post Diameter (Dim. B)	Part Number
0.190 4.82	**0.025** 0.64	445814-1
0.230 5.84	**0.025** 0.64	445814-2
0.180 4.57	**0.020** 0.51	445814-3

Size 22, Snap-In, Front Release Socket Contacts

Use Insertion/Extraction Tool Part Number 445815-1

with Round Posts

Minimum Post Extension from Rear of Insert (Dim. A)	Post Diameter (Dim. B)	Part Number	Solder Dipped
0.150 3.81	**0.025** 0.64	211431-2	No
0.250 6.35	**0.025** 0.64	211431-4	No
0.375 9.52	**0.025** 0.64	211431-6	No
0.500 12.70	**0.025** 0.64	211431-8	No
0.150 3.81	**0.0195** 0.50	1-211431-0	No
0.250 6.35	**0.0195** 0.50	1-211431-2	No
0.150 3.81	**0.030** 0.76	1-211431-3	Yes
0.375 9.52	**0.030** 0.76	1-211431-4	Yes
0.250 6.35	**0.025** 0.64	1-211431-5	Yes

with .025 [0.64] Square Posts

Number of Wraps	Post Extension from Rear of Insert (Dim. A)	Part Number
1	**0.250** 6.35	211245-2
2	**0.375** 9.52	211245-4
3	**0.500** 12.70	211245-6

Dimensions are shown for reference purposes only. Specifications subject to change.

Dimensions are in millimeters unless otherwise specified.

USA: +1 800 522 6752
Asia Pacific: +86 0 400 820 6015
UK: +44 800 267 666

For additional support numbers please visit www.te.com

Posted Contacts (Continued)

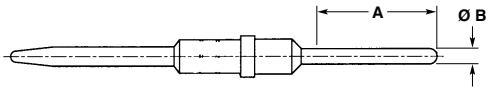

Size 16
Part Number 448139

Front Release/Remove
Size 12, Posted Pin Contacts

Use Insertion/Extraction Tool
Part Number 445147-1

Minimum Post Extension from Rear of Insert (Dim. A)	Post Diameter (Dim. B)	Part Number	Solder Dipped
0.264 6.70	**.079–.083** 2.01–2.11	448140-3	No
0.379 9.62	**.079–.083** 2.01–2.11	448140-6	No
0.264 6.70	**.079–.083** 2.01–2.11	448140-9	Yes
0.143 3.63	**.079–.083** 2.01–2.11	448140-8	No

Front Release/Remove
Size 16, Posted Pin Contacts

Use Insertion/Extraction Tool
Part Number 91066-3

Minimum Post Extension from Rear of Insert (Dim. A)	Post Diameter (Dim. B)	Part Number	Solder Dipped
0.379 9.62	**.048–.052** 1.22–1.32	448139-6	No
0.264 6.70	**.048–.052** 1.22–1.32	1-448139-1	No
0.233 5.91	**.048–.052** 1.22–1.32	1-448139-4	No
0.264 6.70	**.048–.052** 1.22–1.32	1-448139-5	Yes
0.143 3.63	**.061–.064** 1.55–1.63	448139-8	No

Front Release/Remove
Size 20, Posted Pin Contacts

Use Insertion/Extraction Tool
Part Number 91066-4

Minimum Post Extension from Rear of Insert (Dim. A)	Post Diameter (Dim. B)	Part Number	Solder Dipped
0.379 9.62	**.030–.034** 0.76–0.86	2-448138-3	No
0.236 5.99	**.030–.034** 0.76–0.86	1-448138-2	No
0.272 6.90	**.030–.034** 0.76–0.86	1-448138-5	No
0.272 6.90	**.030–.034** 0.76–0.86	1-448138-6	Yes
0.236 5.99	**.030–.034** 0.76–0.86	1-448138-7	Yes

Catalog 1308940
Revised 9-14

www.te.com

Dimensions are shown for reference purposes only. Specifications subject to change.

Dimensions are in millimeters unless otherwise specified.

USA: +1 800 522 6752
Asia Pacific: +86 0 400 820 6015
UK: +44 800 267 666

For additional support numbers please visit www.te.com

COAXICON Contacts

COAXICON Contacts

COAXICON Contacts are not supplied in connector kits; they must be ordered separately.

Size 1 Size 5

Size 1 Contacts

Performance Characteristics

Nominal Impedance — 50 ohms

Frequency Range — 0 to 5 GHz

Operating Temperature — -85°F to +329°F [-65°C to +165°C]

Operating Voltage (Rated) — 1000 VAC rms, 60 Hz at Sea Level

Contact Resistance (Milliohms) —
1.0 max. — Center Contact
0.2 max. — Outer Contact

Insulation Resistance —
5,000 megohms min. @ 500 vdc per MIL-STD-1344, Method 3003 or MIL-STD-202, Method 302, Cond. B

Dielectric Withstanding Voltage (60 Hz, rms) —
RG 214/U
2500 at Sea Level
RG 142/U
1900 at Sea Level

VSWR — 1.35 to 1.00 at 5 GHz

Insertion/Withdrawal Force —
Insertion (max.) 15 lb [66.72 N]
Withdrawal (min.) 1 lb [4.45 N]

Cable Retention —
RG 214/U
125 lb [556 N] min.
RG 142/U
60 lb [266.9 N] min.

Thermal Shock — per MIL-STD-1344, Method 1003, Cond. A or MIL-STD-202, Method 107, Cond. A

Physical Shock — per MIL-STD-1344, Method 2004, Cond. D or MIL-STD-202, Method 213, Cond. D except 300 G max.

Vibration — per MIL-STD-1344, Method 2005, Cond. VI, Letter J or MIL-STD-202, Method 204, Cond. E except 42 G max.

Humidity Temperature Cycling — per MIL-STD-1344, Method 1002, Type II, Cond. A or MIL-STD-202, Method 106

Salt Spray — per MIL-STD-1344, Method 1001, Cond. B or MIL-STD-202, Method 101, Cond. B

Temperature Life — per MIL-STD-1344, Method 1005, Cond. D or MIL-STD-202, Method 108, Cond. D

Material and Finish

Contact — Beryllium Copper per ASTM-B-196/ASTM-B-197, Brass per ASTM-B-16, PTFE per ASTM-D-1710, Silicon Rubber per ZZ-R-765, Gold plate per MIL-G-45204, Nickel plate per QQ-N-290

Ferrule — Copper per ASTM-B-188, Tin plate per ASTM-B-545

Size 1 (Captivated)

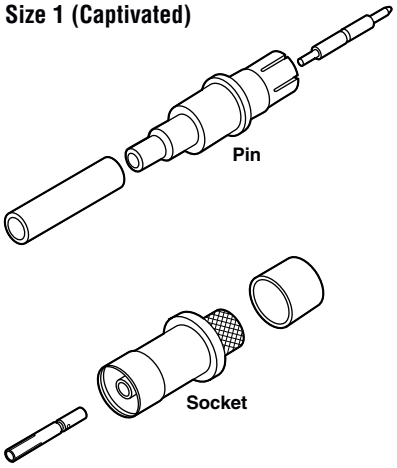

Adapter — Size 1 Pin to SMA Jack

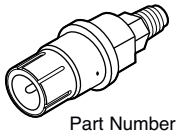

Part Number 221597-1

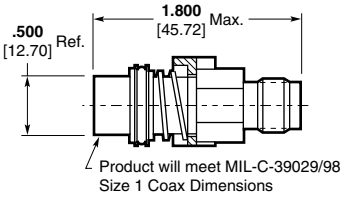

Adapter Standard Size 1
Socket to TNC
Part Number 449908-1

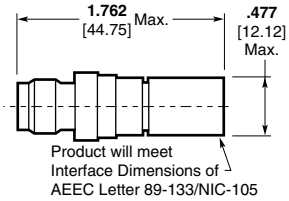

TCAS Size 1
Socket to TNC Adapter
Part Number 447346-1

Catalog 1308940
Revised 9-14

www.te.com

Dimensions are shown for reference purposes only. Specifications subject to change.

Dimensions are in millimeters unless otherwise specified.

USA: +1 800 522 6752
Asia Pacific: +86 0 400 820 6015
UK: +44 800 267 666

For additional support numbers please visit www.te.com

COAXICON Contacts (Continued)

Contact Size	RG/U Cable	Contact Part No.		"O" Crimp Tooling			Military Hex Crimp Tooling				Compression Crimp Tooling		
				Center Contact			Center Contact		Ferrule				
		Pin	Socket	Tool (M22520/)	Positioner/ Die	Ferrule	Tool (M22520/)	Die (M22520/)	Tool (M22520/)	Die (M22520/)	Tool (M22520/)	Locator (M22520/)	Dies (M22520/)
O Crimp													
Size 1 (for use with 71C1, 71C1A, C2 and C2A inserts)	402 Semi-Rigid .141 [3.58]	225837-1	—	601966-1 (2-01)	1-601966-9	91905-1[1] or 91904-1[1]	—	—	—	—	—	—	—
	402 Semi-Rigid .141 [3.58]	222018-1	—	—	—	—	—	—	—	—	59980-1 (36-01)	220220-2 (36-06)	312253-1 (36-03)
	405 Semi-Rigid .086 [2.18]	222018-2	—	—	—	—	—	—	—	—	59980-1 (36-01)	220220-2 (36-06)	312253-2 (36-02)
	214	—	225831-1 211229-1*	220015-1	—	220015-1	—	—	—	—	—	—	—
	142, 142A, 142B	—	225831-3 446709-1*	91902-1[1]	—	91902-1[1]	—	—	—	—	—	—	—
	393	—	225831-6 446709-3*	220015-1	—	220015-1	—	—	—	—	—	—	—
	Tflex 402	—	1757492-1	—	—	—	—	—	—	—	—	—	—
Military Hex Crimp													
Size 1 (for use with 71C1, 71C1A, C2 and C2A inserts)	214	447095-1	447087-1	—	—	—	608650-1 (5-01)	(5-25)	608650-1 (5-01)	(5-25)	—	—	—
	213	447095-2	447087-2 446709-5*	—	—	—	608650-1 (5-01)	(5-25)	608650-1 (5-01)	(5-25)	—	—	—
	142, 142A, 142B	447095-3	447087-3 446709-6*	—	—	—	608650-1 (5-01)	(5-11)	608650-1 (5-01)	(5-11)	—	—	—
	393	447095-4	447087-4 446709-7* 5-447087-4***	—	—	—	608650-1 (5-01)	(5-25)	608650-1 (5-01)	(5-25)	—	—	—
	ECS 311201	—	447087-5 446709-2*	—	—	—	608650-1 (5-01)	(5-29)	608650-1 (5-01)	(5-29)	—	—	—
	SMA Adapter	1757180-1	—	—	—	—	—	—	—	—	—	—	—
Modified Size 1 Straight Exit (for use with C4 inserts)	214	—	446549-3*	—	—	—	M22520/5-01**	—	—	M22520/5-25	—	—	M22520/5-25
	142	—	446549-1 5-446549-1***	—	—	—	M22520/5-01**	—	—	M22520/5-11	—	—	M22520/5-11
	393	—	446549-5*	—	—	—	M22520/5-01**	—	—	M22520/5-25	—	—	M22520/5-25
	Times AA5886	—	446549-6*	—	—	—	M22520/5-01**	—	—	M22520/5-25	—	—	M22520/5-04
	Times AA5887	—	446549-2*	—	—	—	M22520/5-01**	—	—	M22520/5-29	—	—	M22520/5-29
	ESC 311201	—	446549-4*	—	—	—	M22520/5-01**	—	—	M22520/5-29	—	—	M22520/5-29
	SMA Adapter	446748-1	—	—	—	—	—	—	—	—	—	—	—
	OSP Adapter	1218713-1	—	—	—	—	—	—	—	—	—	—	—
	QMA Adapter	1757859-1	—	—	—	—	—	—	—	—	—	—	—
	Posted Contact	1757669-1	—	—	—	—	—	—	—	—	—	—	—

*Socket with mounting hardware. Mounting hardware for Size 1 Straight Exit Contacts includes: backup plate, spring, retaining ring, O-ring, washers and screws.
**TE Connectivity does not sell Hand Tool M22520/5-01. However, it can be purchased from: Daniels Manufacturing Corp, 6103 Anno Ave., Orlando, FL 32809, 800-327-2432.
***RoHS compliant Part Number.

Notes: 1. SDE die used with hand tool frame 354940-1.
2. Hardware kit for Size 1 COAXICON Socket Contacts (used on 71C1 or C2 inserts) includes all mounting hardware required (retention plate, washers, O-ring, spring, screws and retention clip). Kit Number 447118-1 (5-447118-1 RoHS Kit Number).
3. Size 1 COAXICON Pin Contacts require retention plate 211216-2 and four screws 211558-1.
4. Size 1 COAXICON Pin Contacts with SMA adapter require retention plate 1757203-2 and four screens 211558-1.

COAXICON Contacts (Continued)

Size 5 and 8 Contacts

Performance Characteristics for size 5 contacts

Nominal Impedance — 50 ohms

Frequency Range — 0 to 500 MHz

Operating Temperature — -85°F to +329°F [-65°C to +165°C]

Operating Voltage (Rated) — 325 VAC rms, 60 Hz

Contact Resistance (Milliohms) — Size 5 with RG 58/U cable:
Center Contact — 10
Outer Contact — 1.5

Insulation Resistance — 5,000 megohms min. @ 500 vdc per MIL-STD-1344, Method 3003 or MIL-STD-202, Method 302, Cond. B

Dielectric Withstanding Voltage (60 Hz, rms) — Sizes 5 with RG 58/U and 316/U cable:
750 - Sea Level
350 - 50,000 ft [15 240 m]

VSWR — 1.3 to 1.0 @ 500 MHz

Insertion/Withdrawal Force — Size 5:

Insertion Force Maximum		Withdrawal Force Minimum	
lb	[N]	lb	[N]
5	22.24	1	4.45

Cable Retention — Sizes 5:
60 lb [266.9 N]

Durability — 500 cycles

Thermal Shock — per MIL-STD-1344, Method 1003, Cond. A or MIL-STD-202, Method 107, Cond. A

Physical Shock — per MIL-STD-1344, Method 2004, Cond. A or MIL-STD-202, Method 213, Cond. A

Vibration — per MIL-STD-1344, Method 2005, Cond. IV or MIL-STD-202, Method 204, Cond. D

Moisture Resistance — per MIL-STD-202, Method 106, omit steps 7a and 7b

Salt Spray — 48 hours per MIL-STD-1344, Method 1001, Cond. B or MIL-STD-202, Method 101, Cond. B

Material and Finish

Contact — Beryllium copper per ASTM-B-196/ASTM-B-197, Brass per ASTM-B-16, PTFE per ASTM-D-1710, Gold plate per MIL-G-45204, Nickel plate per QQ-N-290

Ferrule — Copper per ASTM-B-188, tin plate per ASTM-B-545

Size 5

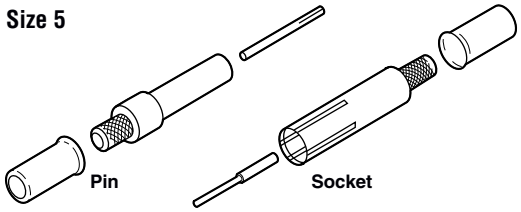

Size 5
Extraction Tool
Part Number 91074-1

Contact Size	RG/U Cable	Contact Part No.		"O" Crimp Tooling			Military Hex Crimp Tooling			
				Center Contact			Center Contact		Ferrule	
		Pin	Socket	Tool (M22520/)	Positioner/ Die	Ferrule	Tool (M22520/)	Die (M22520/)	Tool (M22520/)	Die (M22520/)
O Crimp										
5	58C	225790-1	225791-1	601966-1 (2-01)	1-601966-6 K345	91905-1*	—	—	—	—
	400, 142, 142A, 142B	225790-2	225791-2	91904-1*	—	91905-1*	—	—	—	—
	141A	225790-1	225791-1	91904-1*	—	91905-1*	—	—	—	—
	402 Semi-Rigid .141 [3.58]	225790-3	225791-6	91904-1*	—	91905-1*	—	—	—	—
	174, 188, 316	225790-5	225791-3	601966-1 (2-01)	1-601966-6 K345	91905-1*	—	—	—	—
	180, 195	225790-4	225791-8	601966-1 (2-01)	1-601966-6 K345	91905-1*	—	—	—	—
	179, 187	225790-6 5-225790-6**	225791-4 5-225791-4**	601966-1 (2-01)	1-601966-6 K345	91905-1*	—	—	—	—
	178, 196	225790-7	225791-5	601966-1 (2-01)	1-601966-6 K345	220020-1	—	—	—	—
	223	225790-2	225791-2	601966-1 (2-01)	1-601966-6 K345	91905-1*	—	—	—	—
	BMS 13-65-OF	—	1757892-1	—	—	—	—	—	—	—
Military Hex Crimp										
5	316 Double Shield 188 Double Shield	225790-8 5-225790-8**	1-225791-0	—	—	—	601966-1 (2-01)	1-601966-6 K345	608650-1 (5-01)	(Y159)
	58C, 141A	447850-1	447851-1	—	—	—	601966-1 (2-01)	1-601966-6 K345	608650-1 (5-01)	(5-45B)
	142, 142A, 142B	447850-2	447851-2	—	—	—	601966-1 (2-01)	1-601966-6 K345	608650-1 (5-01)	(5-45B)
	402 Semi-Rigid .141 [3.58]	447850-3	447851-3	—	—	—	601966-1 (2-01)	1-601966-6 K345	608650-1 (5-01)	(5-45A)
	174, 188, 316	447850-4	447851-4	—	—	—	601966-1 (2-01)	1-601966-6 K345	608650-1 (5-01)	(5-37B)

*SDE die used with hand tool frame 354940-1.
**RoHS compliant Part Number.

Catalog 1308940
Revised 9-14

www.te.com

Dimensions are shown for reference purposes only. Specifications subject to change.

Dimensions are in millimeters unless otherwise specified.

USA: +1 800 522 6752
Asia Pacific: +86 0 400 820 6015
UK: +44 800 267 666

For additional support numbers please visit www.te.com

COAXICON Contacts (Continued)

Size 8 TWINAX/TRIAX/COAX Contacts

Size 8 Triax

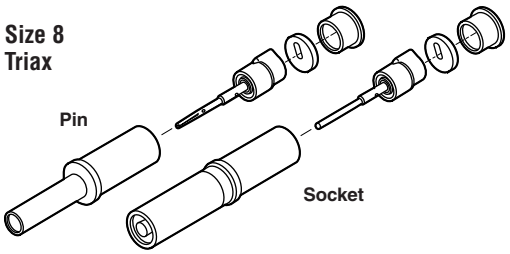

Size 8 Contact Extraction Tooling

Contact Style	Tool Part Number
Rear Release/Rear Remove	58284-1
Front Release/Front Remove	58284-1
Front Release/Rear Remove	448703-1

Contact Size	Style	Cable	Contact Part No. Pin	Contact Part No. Socket	Crimp Tooling	Crimp Tooling: Center Contact	Crimp Tooling: Ferrule
8 TWINAX	RR/RR	M17/176-00002	—	222191-4	Hand Tool Frame M22520/5-01 (TE Connectivity 608650-1) Crimping Die TE 58316-1 or Daniels Y793 or Y793A or TE Hand Crimping Tool 91907-1*	—	—
	RR/RR	Tensolite 24463/9P025X-2(LD) or 24463/9B017X-2 (LD)	—	222191-5		—	—
	RR/RR	M17/176-00002	222190-4 (short engagement)	—		—	—
	RR/RR	Tensolite 24463/9P025X-2(LD) or 24463/9B017X-2 (LD)	222190-3 (short engagement)	—		—	—
	RR/RR	Tensolite 24463/9P025X-2(LD) or 24463/9B017X-2(LD)	448313-2 (long engagement)	—		—	—
	FR/RR	Tensolite 24463/9P025X-2(LD) or 24463/9B017X-2(LD)	448312-2 (long engagement)	—		—	—
8 TRIAX	FR/FR	Posted (**.250** [6.35] min. post extension)	448541-1 (long engagement)	—	—	—	—
8 Coax	RR/RR	M/A-COM FC11Z	—	448543-1	—	M22520/2-01 (TE 601966-1)	91907-1*
	RR/RR	M/A-COM FC14Z	—	448543-2	—		91907-1*
	RR/RR	RG/U-316, 188	1218687-3 (long engagement)	1218820-1	—		91907-1*
	RR/RR	RG/U-142	1218689-1 (long engagement)	1218821-1	—		91907-1*
	RR/RR	BMS 13-65-OF	—	1757891-1	—	—	—
	RR/RR	Adams Russell FC14Z, BMS 13-65-OF	—	448543-2	—	—	—
	RR/RR	DMS2345-62AU	—	448543-3	—	—	—
	RR/RR	BMS 13-65-OF (**.218** [5.54] hex crimp)	1757624-1**	—	—	—	—
	FR/RR	M/A-COM FC11Z	448542-1 (long engagement)	—	—	M22520/2-01 (TE 601966-1)	91907-1*
	FR/RR	M/A-COM FC14Z	448542-2 (long engagement)	—	—		91907-1*
	FR/FR	Posted (**.250** [6.35] min. post extension)	448540-2 (long engagement)	—	—	—	—

*SDE die used with hand tool frame 354940-1.
**Designed for Quadrax cavity, no key on contact.
Note: Size 8 QUADRAX Contacts shown on pages 4-79 to 4-81.

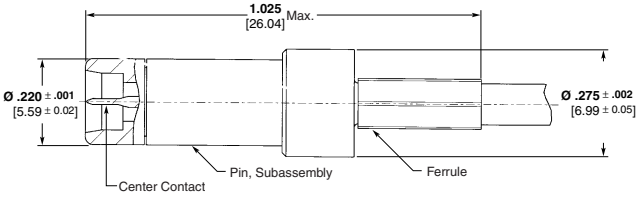

Pin

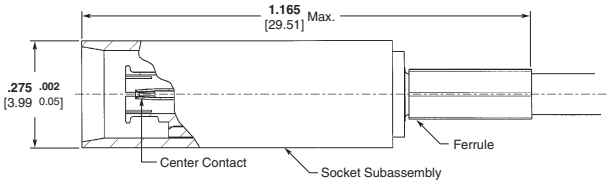

Socket

Size 5 Coax Contacts, Spring Loaded 75 Ohm

Style	Cable	Contact Part No. Pin	Contact Part No. Socket	Crimp Tooling: Center Contact	Crimp Tooling: Braid
Rear Release/ Rear Remove	RG/U-179	443971-1	443972-1	Daniels HMR Tool AFM8 or TE Connectivity 601966-1 with Daniels positioner K1289 (socket) or K1288S (pin)	Daniels HX4 with Die-set Y196 cavity A or TE Connectivity 35940-1 with Die-set 58483-1 Cavity B

Dimensions are shown for reference purposes only. Specifications subject to change.
Dimensions are in millimeters unless otherwise specified.
USA: +1 800 522 6752
Asia Pacific: +86 0 400 820 6015
UK: +44 800 267 666
For additional support numbers please visit www.te.com

Traffic Alert and Collision Avoidance System (TCAS) Connectors and Mode S Transponder Connectors

Product Facts

Plug Connector

- **TE Connectivity modified Size 1 coaxial contacts use standard military crimp tooling for reliable connections without the need for special tooling**
- **TE plug allows repair or replacement of the coaxial contacts without connector disassembly. Two front-release captivated screws release the backup plate**
- **TE connector conforms to the ARINC 600 specification, for connector intermateability and contact interchangeability**

Receptacle Connector

- **TE modified Size 1 coaxial contact incorporates a SMA jack for easy assembly**
- **TE connector conforms to the ARINC 600 specification, for connector intermateability and contact interchangeability**

Connector	Description	Part Numbers	Descriptive Part Number
TCAS Plug	Semi-environmental w/o contacts	445717-1	NIC66 K 36 C 40 AA 1
	Semi-environmental w/contacts, w/o coaxial contacts	445717-2	NIC66 K 36 C 40 AA 0
	Non-environmental w/o contacts	445717-3 5-445717-3*	NIC66 K 36 A 40 AA 1
	Non-environmental w/contacts, w/o coaxial contacts	445717-4	NIC66 K 36 A 40 AA 0
	Non-environmental w/o contacts, (8) #6-32 clinch nuts	445717-5	NIC66 K 36 A 40 CD 1
	Semi-environmental w/o contacts, (10) #4-40 clinch nuts	445717-6	NIC66 K 36 A 40 SC 1
TCAS Receptacle	Front release w/o contacts	445718-1	NIC66 J 36 FA 40 FA 1
Mode S Plug	Non-environmental w/contacts, w/o coaxial contacts	208972-5	NIC66 H 23 A 01 AA 0
	Non-environmental w/o contacts	208972-7	NIC66 H 23 A 01 AA 1
	Environmental w/contacts, w/o coaxial contacts	208973-5	NIC66 H 23 B 01 AA 0
	Semi-environmental w/o contacts	208973-6	NIC66 H 23 C 01 AA 1
Mode S Receptacle	Front release w/o contacts	211991-1	NIC66 G 23 FA 01 FA 1

Note: All standard ARINC 600 shell modifications are available.

* RoHS compliant Part Number.

The TCAS System includes one mated pair of Size 3 ARINC 600 connectors, called TCAS Connectors. The plug connector is mounted in the rack, and the receptacle connector is in the avionics box.

The TCAS System also includes one or two mated pairs of Size 2 ARINC 600 Connectors, called Mode S Transponder Connectors. The plug connectors are mounted in the rack, and the receptacle connectors are in the avionics box.

Catalog 1308940
Revised 9-14

www.te.com

Dimensions are shown for reference purposes only. Specifications subject to change.

Dimensions are in millimeters unless otherwise specified.

USA: +1 800 522 6752
Asia Pacific: +86 0 400 820 6015
UK: +44 800 267 666

For additional support numbers please visit www.te.com

Traffic Alert and Collision Avoidance System (TCAS) Connectors and Mode S Transponder Connectors (Continued)

Contact Requirements

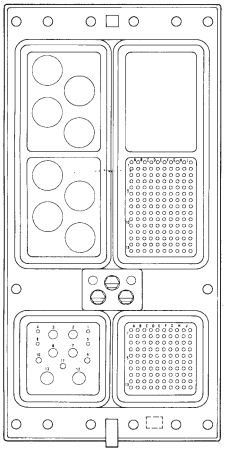

TCAS Connector Insert Arrangement (Receptacle Mating Face Shown)

Plug Contacts

No. of Contacts	Contact Size	Contact Sex	Part Number
250	22	pin	208262-3
4	20	socket	208267-2
3	16	socket	208270-2
4	12	socket	208273-2
2	5 coax	socket	***
8	1 coax-Mod.	socket	**

Receptacle Contacts

No. of Contacts	Contact Size	Contact Sex	Part Number
250	22	socket	*
4	20	pin	208265-3
3	16	pin	208268-3
4	12	pin	208271-3
2	5 coax	pin	***
8	1 coax-Mod.	pin	**

* See page 4-20 for part numbers.
** See page 4-25 for part numbers.
*** See page 4-24 for part numbers.

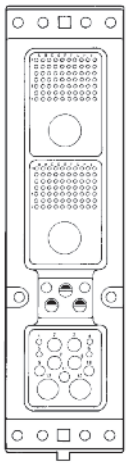

Mode S Transponder Insert Arrangement

Plug Contacts

No. of Contacts	Contact Size	Contact Sex	Part Number
140	22	pin	208262-3
4	20	socket	208267-2
3	16	socket	208270-2
4	12	socket	208273-2
2	5 coax	socket	***
2	1 coax	socket	**

Receptacle Contacts

No. of Contacts	Contact Size	Contact Sex	Part Number
140	22	socket	*
4	20	pin	208265-3
3	16	pin	208268-3
4	12	pin	208271-3
2	5 coax	pin	***
2	1 coax	pin	**

* See page 4-20 for part numbers.
** See page 4-23 for part numbers.
*** See page 4-24 for part numbers.

Catalog 1308940
Revised 9-14

www.te.com

Dimensions are shown for reference purposes only. Specifications subject to change.

Dimensions are in millimeters unless otherwise specified.

USA: +1 800 522 6752
Asia Pacific: +86 0 400 820 6015
UK: +44 800 267 666

For additional support numbers please visit www.te.com

Single Mod ARINC 600

Descriptive Numbering

NIC66S P A 150 A 01 A

Series Designation

Shell Style/Plating
P—Plug with Chromate Conversion Coating
PN—Plug with Electroless Nickel Plating
R—Receptacle with Chromate Conversion Coating
RN—Receptacle with Electroless Nickel Plating

Class
A—Nonenvironmental, rear release
B—Environmental, rear release
C—Environmental, rear release without O-Ring or sealant around inserts
FA—Nonenvironmental, front release size 22 contacts (other contact sizes rear release)
FF—Nonenvironmental, all contact sizes front release except size 1 coax remains rear removal

Insert*
See inserts on pages 4-10 and 4-11
Use size 2 or 3 Module A, B, D and E inserts

Mounting Modifier
A—Standard Mounting, **.146–.156** [3.71–3.96] dia. holes
B—(4) #4-40 Clinch Nuts
C—(4) #6-32 Clinch Nuts

Keying
01-36, see keying codes on page 4-30

Contact Loading
X—Contacts Not Included With Connector (used also for Expanded Beam Fiber Optic Inserts)
A—Rear release crimp contacts included
B—Front release **.025** [.64] dia. x **.150** [3.81] solder post size 22 sockets loaded
C—Front release **.025** [.64] dia. x **.250** [6.35] solder post size 22 sockets loaded
D—Front release **.025** [.64] dia. x **.375** [9.53] solder post size 22 sockets loaded
E—Front release **.025** [.64] dia. x **.500** [12.70] solder post size 22 sockets loaded
F—Front release **.025** [.64] square x **.250** [6.35] (1 wrap) size 22 sockets loaded
G—Front release **.025** [.64] square x **.375** [9.52] (2 wrap) size 22 sockets loaded
H—Front release **.025** [.64] square x **.500** [12.70] (3 wrap) size 22 sockets loaded

See Contacts on pages 4-19 to 4-25

* Expanded Beam Fiber Optic inserts can also be used — must use signal cavity inserts identified as 1JS, 2JS, 3JS, or 6MS. See page 4-14 or contact TE Connectivity for more information.

Dimensions are shown for reference purposes only. Specifications subject to change.

Dimensions are in millimeters unless otherwise specified.

USA: +1 800 522 6752
Asia Pacific: +86 0 400 820 6015
UK: +44 800 267 666

For additional support numbers please visit www.te.com

Single Mod ARINC 600 (Continued)

Keying and Polarization

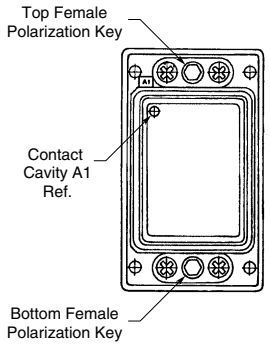

Receptacle (Box Side)

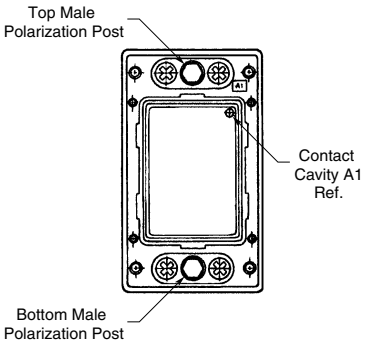

Plug (Rack Side)

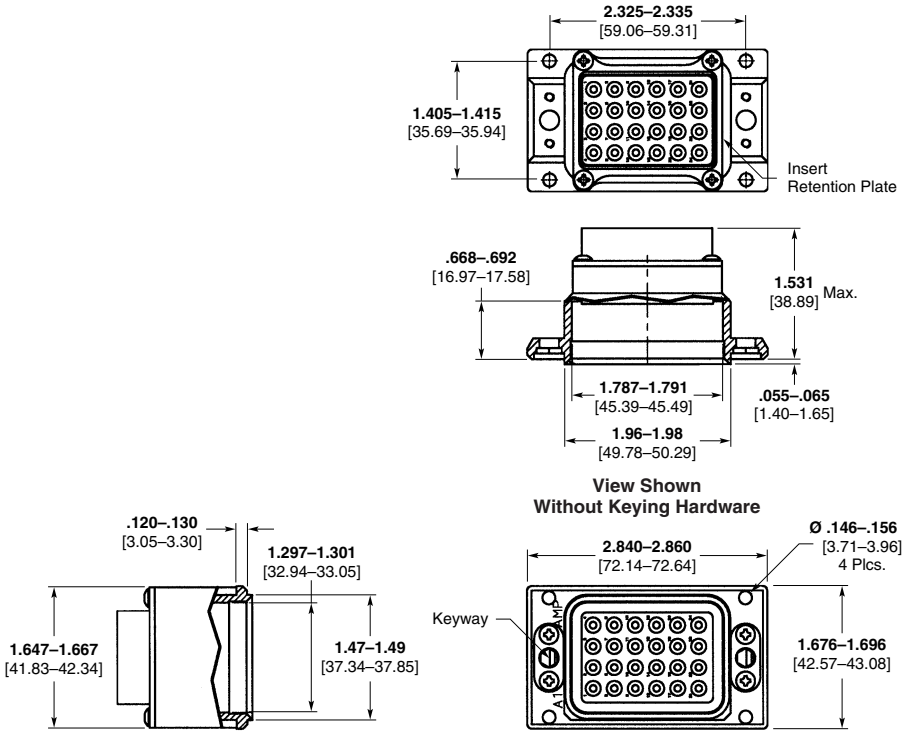

Single Mod Receptacle

Dimensions are shown for reference purposes only. Specifications subject to change.

Dimensions are in millimeters unless otherwise specified.

USA: +1 800 522 6752
Asia Pacific: +86 0 400 820 6015
UK: +44 800 267 666

For additional support numbers please visit www.te.com

Single Mod ARINC 600 (Continued)

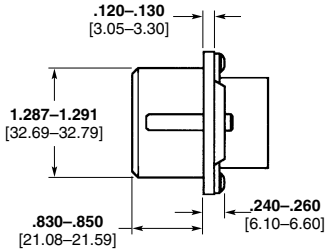

Single Mod Plug

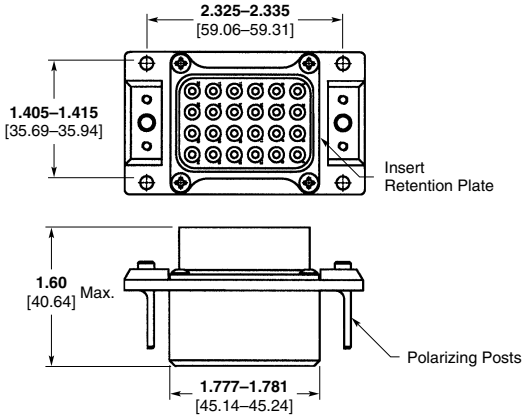

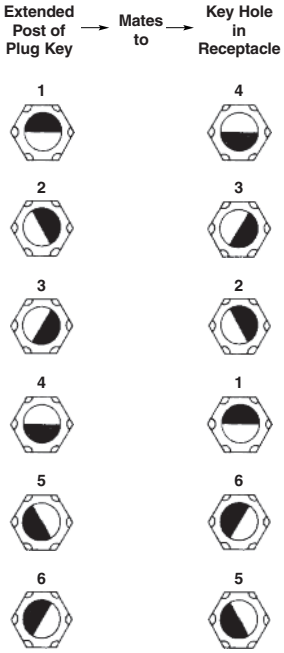

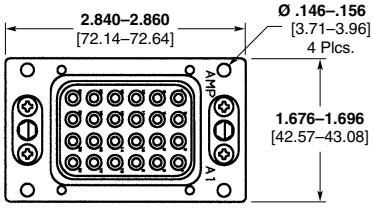

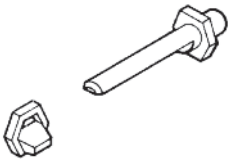

Keying Code	Receptacle		Plug	
	Top Key	Bottom Key	Top Post	Bottom Post
01	1	1	4	4
02	3	4	2	1
03	2	4	3	1
04	1	4	4	1
05	6	4	5	1
06	5	4	6	1
07	4	5	1	6
08	3	5	2	6
09	2	5	3	6
10	1	5	4	6
11	6	5	5	6
12	5	5	6	6
13	4	6	1	5
14	3	6	2	5
15	2	6	3	5
16	1	6	4	5
17	6	6	5	5
18	5	6	6	5

Keying Code	Receptacle		Plug	
	Top Key	Bottom Key	Top Post	Bottom Post
19	4	1	1	4
20	3	1	2	4
21	2	1	3	4
22	4	4	1	1
23	6	1	5	4
24	5	1	6	4
25	4	2	1	3
26	3	2	2	3
27	2	2	3	3
28	1	2	4	3
29	6	2	5	3
30	5	2	6	3
31	4	3	1	2
32	3	3	2	2
33	2	3	3	2
34	1	3	4	2
35	6	3	5	2
36	5	3	6	2

Dimensions are shown for reference purposes only. Specifications subject to change.

Dimensions are in millimeters unless otherwise specified.

USA: +1 800 522 6752
Asia Pacific: +86 0 400 820 6015
UK: +44 800 267 666

For additional support numbers please visit www.te.com

EMI/Ground Spring

EMI/Ground Spring Performance Data Comparison

	Cantilever Style	Canted Coil Style
Mating/Un-mating Force Results Design Objective = < 15 lbs for size 2 shell	6 lbs/3 lbs	14 lbs/6 lbs
Durability	500 min. mating/un-mating cycles	
EMI Test Results (Size 2 Shell) 100 to 1,000 MHz Design Objective = 65 dB @ 100 MHz and 60 dB @ 1,000 MHz	89 dB min. 93 dB average	88 db min. 92 dB average
Field Repairable	No	Yes

Canted Coil Spring Design

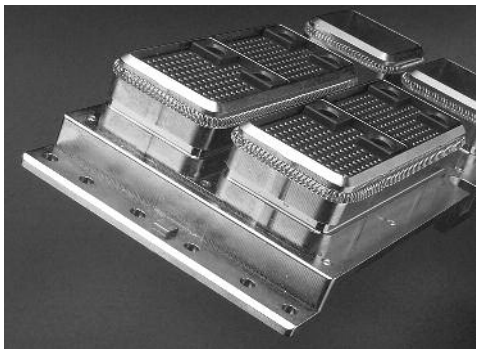

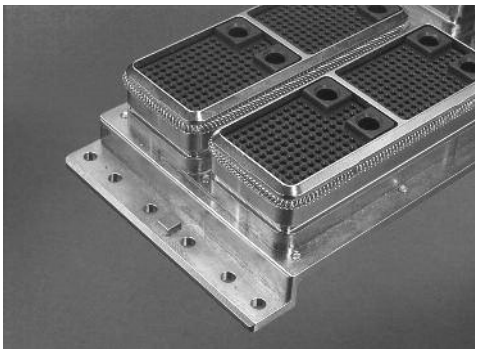

Cantilever Spring Design

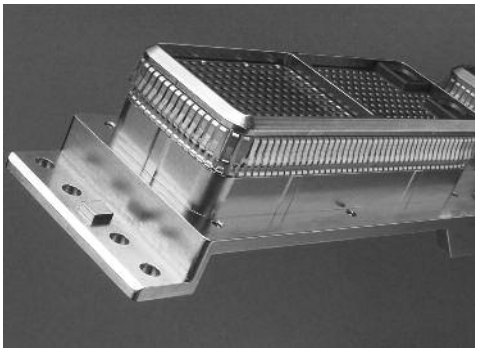

Note: ARINC 600 connectors can be supplied with either canted coil spring or cantilever spring design, contact TE Connectivity.

Catalog 1308940
Revised 9-14

www.te.com

Dimensions are shown for reference purposes only. Specifications subject to change.

Dimensions are in millimeters unless otherwise specified.

USA: +1 800 522 6752
Asia Pacific: +86 0 400 820 6015
UK: +44 800 267 666

For additional support numbers please visit www.te.com

Recommended Panel Cutouts

Shell Size 1

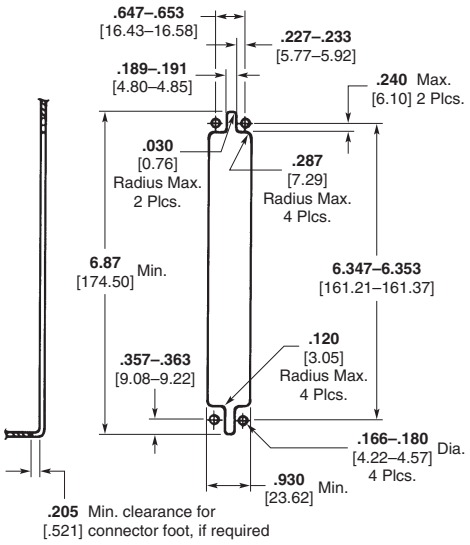

Receptacle

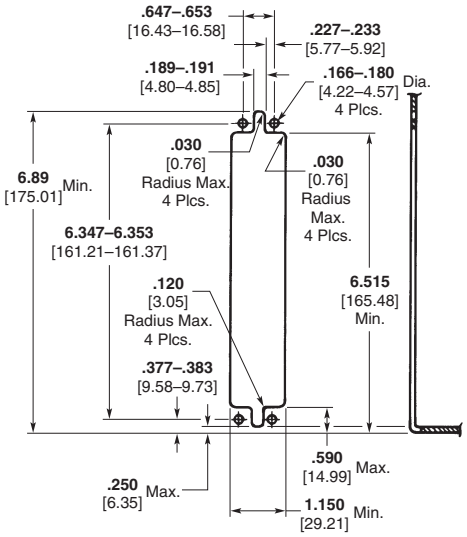

Plug

Shell Size 2

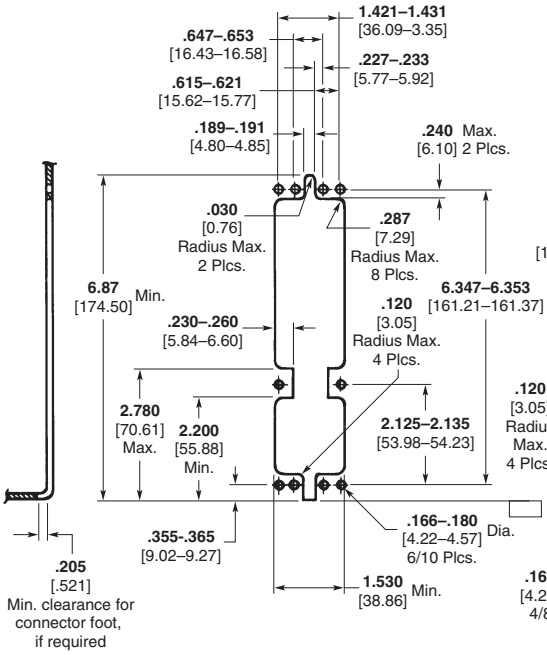

Receptacle

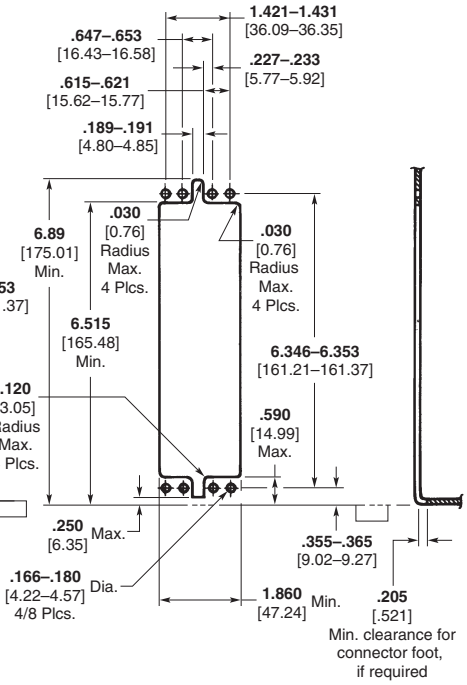

Plug

Note: These drawings are for reference only. For detailed mounting instructions, see the ARINC 600 specification.

Recommended Panel Cutouts (Continued)

Shell Size 3

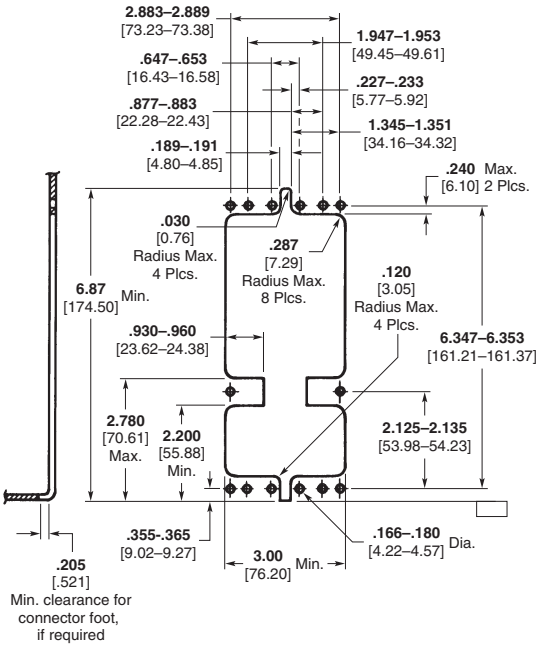

Receptacle

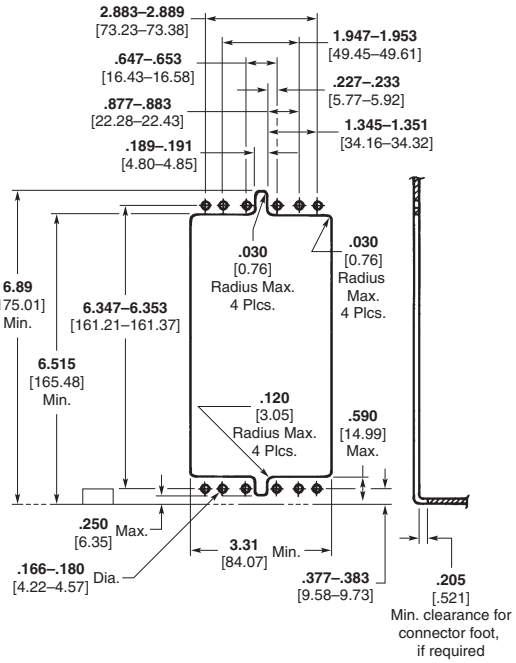

Plug

Accessories

Materials and Finish

Body — Copper alloy, .000015 [0.000381] min. gold per MIL-G-45204 over .000040 [0.00102 min. nickel per QQ-N-290

End Cap — PTFE

PTFE is a trademark of E.I. du Pont de Nemours and Company.

Cavity Reducer Pin

Part Number 446743-1

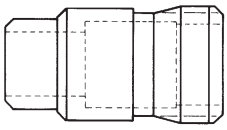

Size 5 coax to size 12 contact cavity reducer. Insert into size 5 coax cavity to convert to a size 12 power contact cavity.

Cavity Reducer Socket

Part Number 446744-1

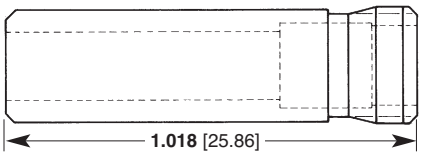

Dust Covers, Conductive

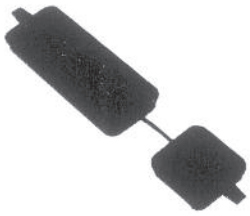

Connector Size(s)	Part Number
1	211600-1
2 & 3	211600-2

Coaxial Sealing Plug and Boot

Material — Silicone Rubber

Size 5

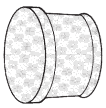

Plug—Part Number 205975-1

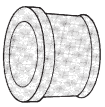

Boot for RG-58C cable—Part Number 205402-2
Boot for RG-180, -190 cable—Part Number 205402-3

Sealing Plugs

Size 22

Part Number 204760-1
White PTFE

Size 20

Part Number 203839-1
Red thermoplastic

Size 16

Part Number 203839-2
Blue thermoplastic

Size 12

Part Number 205574-1
Yellow thermoplastic

Dimensions are shown for reference purposes only. Specifications subject to change.

Dimensions are in millimeters unless otherwise specified.

USA: +1 800 522 6752
Asia Pacific: +86 0 400 820 6015
UK: +44 800 267 666

For additional support numbers please visit www.te.com

Application Tooling and Insertion/Extraction Tooling

Hand Crimping Tools

These standard military-type hand tools terminate screw-machined pins and sockets to wire with an 8-indent crimp per MIL-C-22520. They are ideal for prototype, field maintenance and other applications where volume is not a factor.

Tool Number 601967-1 is suitable for crimping wire range 26 AWG [0.12–0.15 mm^2] to 12 AWG [3 mm^2]. Tool Number 601966-1 is suitable for crimping wire range 32 AWG [0.03 mm^2] to 20 AWG [0.5-0.6 mm^2].

Part Number 601966-1
MIL Number M22520/2-01

AMP-TAPEMATIC 4/8 Indent Stripper-Crimper Machine, 599406-7

Portable bench machine that strips wire and crimps tape-mounted, closed-barrel pin and socket contacts for AMPLIMITE Military, ARINC and CPC connectors. The stripping and crimping heads are accessible through separate openings in the front of the machine. Wire strip length and crimp height are adjustable. The stripping head is pre-set to the proper cutting depth of four standard wire sizes.

Specifications

Width — 12.5 [317]
Depth — 12.5 [317]
Height — 10 [254] without reel
Weight — 45 lb [20 kg]
Electrical — 120 VAC, 60 Hz, 1.3 A
Wire Range — 28-20 AWG [0.08-0.5 mm^2]

Application Tooling Instruction Sheet Cross Reference

Tool Number	Instruction Sheet
601966-1	408-7516
601967-1	408-7516
599406-7	408-7516

Insertion/Extraction Tools, ARINC 600

Tool Part Number	Product Line	Contact Size	Contact Type	Color Code	Style
91066-1	ARINC 600	22	Signal	Green	Rear Release/Rear Remove
91066-4	ARINC 600	20	Signal	Red	Rear Release/Rear Remove and Front Release/Front Remove
91066-3	ARINC 600	16	Signal	Blue	Rear Release/Rear Remove and Front Release/Front Remove
445147-1	ARINC 600	12	Signal	—	Rear Release/Rear Remove and Front Release/Front Remove
445815-1	ARINC 600	22	Signal	—	Front Release/Front Remove
58284-1	ARINC 600	8	Twinax/Triax/ Coax/Quadrax	—	Rear Release/Rear Remove and Front Release/Front Remove
448703-1	ARINC 600	8	Twinax/Triax/Coax	—	Front Release/Rear Remove
91074-1	ARINC 600	5	Twinax/Triax/Coax	—	Rear Release/Rear Remove and Front Release/Front Remove

Dimensions are shown for reference purposes only. Specifications subject to change.

Dimensions are in millimeters unless otherwise specified.

USA: +1 800 522 6752
Asia Pacific: +86 0 400 820 6015
UK: +44 800 267 666

For additional support numbers please visit www.te.com

Cross Reference

For convenience, certain connectors have been assigned conventional TE Connectivity production part numbers, as shown in this table. These parts may be ordered using the TE numbers or by using descriptive part numbers.

Description	TE Designation	Part Number	RoHS Part Number
Size 1 Receptacle, Unsealed	NIC66E11A00AA0	1-208599-1	—
	NIC66E11A00AA1	1-208599-5	—
	NIC66E11A01AA0	208599-1	5-208599-1
	NIC66E11A01AA1	208599-2	—
	NIC66E11A03AA1	208599-7	5-208599-7
	NIC66E11A11AA0	1-208599-0	—
	NIC66E11A12AA0	1-208599-3	—
	NIC66E11A12CB0	208599-4	—
	NIC66E11A16AA0	208599-9	—
	NIC66E11A19CB1	208599-3	—
	NIC66E11A22AA1	208599-5	—
	NIC66E11A23AA0	208599-8	—
	NIC66E11A50AA0	208599-6	—
Size 1 Receptacle, Sealed	NIC66E11B01AA0	208600-1	—
	NIC66E11B01AA1	208600-2	—
	NIC66E11B54AA0	208600-3	—
Size 1 Receptacle, Front Release	NIC66E11FA01FA1	448482-1	—
	NIC66E11FA01FF0	448482-2	—
Size 1 Plug, Unsealed	NIC66F11A00AA0	208597-7	—
	NIC66F11A01AA0	208597-1	—
	NIC66F11A01AA1	208597-2	—
	NIC66F11A03AA0	208597-4	—
	NIC66F11A03CB1	208597-9	—
	NIC66F11A06CB1	1-208597-3	—
	NIC66F11A08AA1	1-208597-2	6-208597-2
	NIC66F11A08CB0	1-208597-5	—
	NIC66F11A10AA1	1-208597-6	6-208597-6
	NIC66F11A13AA0	208597-5	—
	NIC66F11A13AA1	208597-6	—
	NIC66F12A02AA0	208597-8	—
	NIC66F12A02CB0	1-208597-4	—
	NIC66F14A01AA0	1-208597-0	—
Size 1 Plug, Sealed	NIC66F11B01AA0	208598-1	—
	NIC66F11B01AA1	208598-2	5-208598-2
	NIC66F11B22AA1	208598-4	—
	NIC66F11C00AA1	1-208598-2	—
	NIC66F11C01AA1	208598-3	—
Size 2 Receptacle, Unsealed	NIC66G21A00AA0	1-208970-4	—
	NIC66G21A01AA0	208970-1	—
	NIC66G21A01AA1	208970-4	—
	NIC66G21A01AC0	208970-2	—
	NIC66G21A01BA1	208970-5	—
	NIC66G21A01CA0	1-208970-1	—
	NIC66G21A01CC0	2-208970-3	—
	NIC66G21A01CC1	208970-6	5-208970-6
	NIC66G21A01SB1	208970-3	5-208970-3
	NIC66G21A01SC1	1-208970-8	—
	NIC66G21A02AA0	1-208970-3	—
	NIC66G21A02AA1	1-208970-2	—
	NIC66G21A02CC0	2-208970-2	—
	NIC66G21A05CC0	2-208970-4	—
	NIC66G21A09CC0	1-208970-0	—
	NIC66G21A19AA0	1-208970-7	—
	NIC66G26A01AA0	1-208970-6	—
Size 2 Receptacle, Sealed	NIC66G21B01AA0	208971-1	—
	NIC66G21B01AA1	208971-2	—
	NIC66G21B04AA0	208971-4	—
	NIC66G21B05AA0	208971-3	—

Catalog 1308940
Revised 9-14

www.te.com

Dimensions are shown for reference purposes only. Specifications subject to change.

Dimensions are in millimeters unless otherwise specified.

USA: +1 800 522 6752
Asia Pacific: +86 0 400 820 6015
UK: +44 800 267 666

For additional support numbers please visit www.te.com

Cross Reference (Continued)

Description	TE Designation	Part Number	RoHS Part Number
Size 2 Receptacle, Front Release	NIC66G20FA00FA1	3-211991-3	—
	NIC66G20FA01FA1	3-211991-4	—
	NIC66G20FA03FB0	2-211991-0	—
	NIC66G20FA08FB0	2-211991-1	—
	NIC66G21FA FA1	211991-2	—
	NIC66G21FA00CC1	211991-9	—
	NIC66G21FA01CC1	1-211991-0	—
	NIC66G25FA01FA1	211991-3	—
	NIC66G21FA01FC0	1-211991-1	—
	NIC66G21FA01GD0	211991-5	—
	NIC66G21FA01GJ0	3-211991-5	—
	NIC66G21FA01SB1	211991-6	—
	NIC66G21FA02FF0	1-211991-4	—
	NIC66G21FA04FF0	3-211991-0	—
	NIC66G21FA06GF0	2-211991-7	—
	NIC66G21FA07GD0	3-211991-7	—
	NIC66G21FA09GD0	1-211991-6	—
	NIC66G22FA00CC1	2-211991-4	—
	NIC66G23FA00CC1	2-211991-2	—
	NIC66G23FA01FA1	211991-1	—
	NIC66G23FA02FA1	1-211991-7	—
	NIC66G23FA91FA1	211991-4	—
	NIC66G25FA00CC1	2-211991-3	—
	NIC66G26FA01FA1	211991-8	—
	NIC66G26FA68GD0	1-211991-2	—
	NIC66G29FA01FA1	1-211991-8	—
	NIC66G29FA02FA1	3-211991-6	—
Size 2 Plug, Unsealed	NIC66H20A AA0	2-208972-8	—
	NIC66H20A00AA0	3-208972-5	8-208972-5
	NIC66H20A08AA1	4-208972-0	9-208972-0
	NIC66H21A00AA0	1-208972-6	—
	NIC66H21A01AA0	208972-1	5-208972-1
	NIC66H21A01AA1	208972-2	—
	NIC66H21A02AA0	1-208972-4	—
	NIC66H21A02AA1	1-208972-2	—
	NIC66H21A03AA0	3-208972-6	—
	NIC66H21A06AA0	3-208972-7	—
	NIC66H21A14AA0	1-208972-1	—
	NIC66H22A01AA1	208972-8	—
	NIC66H22A13AA0	2-208972-0	—
	NIC66H23A00CB1	3-208972-2	—
	NIC66H23A01AA0	208972-5	—
	NIC66H23A01AA1	208972-7	5-208972-7
	NIC66H23A01CB1	1-208972-8	—
	NIC66H23A02AA0	2-208972-3	—
	NIC66H23A05AA0	2-208972-1	—
	NIC66H25A01AA0	208972-9	—
	NIC66H25A01AA1	1-208972-0	—
	NIC66H26A00AA1	3-208972-4	—
	NIC66H26A01AA0	1-208972-5	—
	NIC66H26A01AA1	1-208972-3	—
	NIC66H26A01SA1	2-208972-2	—
	NIC66H51A00AA0	2-208972-4	—
	NIC66H52A00AA0	3-208972-0	8-208972-0
	NIC66H52A03AA0	3-208972-9	8-208972-9
	NIC66H53A01AA0	2-208972-5	—
	NIC66H53A08AA0	449836-1	—
	NIC66H54A01AA1	2-208972-9	—
	NIC66H56A09AA0	449837-1	—
	NIC66H272A00AA0	1218867-2	—

Dimensions are shown for reference purposes only. Specifications subject to change.

Dimensions are in millimeters unless otherwise specified.

USA: +1 800 522 6752
Asia Pacific: +86 0 400 820 6015
UK: +44 800 267 666

For additional support numbers please visit www.te.com

Cross Reference (Continued)

Description	TE Designation	Part Number	RoHS Part Number
Size 2 Plug, Sealed	NIC66H20B03AA0	2-208973-8	—
	NIC66H20B08AA0	2-208973-9	—
	NIC66H20B40AA1	3-208973-8	—
	NIC66H20C00AA0	3-208973-1	—
	NIC66H21B01AA0	208973-1	—
	NIC66H21B01AA1	1-208973-0	—
	NIC66H21B04AA0	1-208973-3	—
	NIC66H21B05AA0	1-208973-2	—
	NIC66H21B06CD0	3-208973-3	—
	NIC66H21B06CD1	3-208973-4	—
	NIC66H21B40AA1	3-208973-9	—
	NIC66H21C00AA0	3-208973-0	—
	NIC66H21C01AA0	208973-3	—
	NIC66H21C06CD0	3-208973-5	8-208973-5
	NIC66H21C09AA0	3-208973-2	—
	NIC66H21C29AA0	2-208973-0	—
	NIC66H23B01AA0	208973-5	—
	NIC66H23B08AA0	1-208973-4	—
	NIC66H23C01AA1	208973-6	—
	NIC66H25C01AA0	208973-7	—
	NIC66H25C01AA1	208973-8	—
	NIC66H26B01AA1	2-208973-2	—
	NIC66H26B02AA1	1-208973-1	—
	NIC66H52B03AA0	4-208973-0	9-208973-0
Size 3 Receptacle, Unsealed	NIC66J31A00AA0	208974-4	—
	NIC66J31A01AA0	208974-1	—
	NIC66J31A01AA1	208974-3	—
	NIC66J34A01AA0	208974-5	—
Size 3 Receptacle, Sealed	NIC66J31B01AA0	208975-1	—
	NIC66J31B01AA1	208975-3	—
Size 3 Receptacle, Front Release	NIC66J31FA00CA1	1-211992-1	—
	NIC66J31FA01FA1	211992-1	—
	NIC66J31FA01FF0	211992-4	—
	NIC66J31FA01FH0	211992-5	—
	NIC66J31FA03FA1	211992-6	—
	NIC66J31FA27FA1	211992-7	—
	NIC66J32FA00FA1	211992-3	—
Size 3 Plug, Unsealed	NIC66K31A00AA0	208976-5	—
	NIC66K31A01AA0	208976-1	—
	NIC66K31A01AA1	208976-3	—
	NIC66K32A01AA0	208976-7	—
	NIC66K33A01AA0	208976-6	5-208976-6
	NIC66K33A01AA1	208976-2	—
	NIC66K34A01AA0	208976-8	—
	NIC66K36A40CD1	445717-5	—
Size 3 Plug, Sealed	NIC66K31B01AA0	208977-1	—
	NIC66K31B01AA1	208977-3	—
	NIC66K31B01BA0	208977-8	—
	NIC66K31C01AA1	208977-5	—
	NIC66K33B01AA1	208977-2	—
	NIC66K33C01AA1	208977-4	—
	NIC66K34C01AA1	208977-7	—
	NIC66K36C40CD1	1-445717-7	6-445717-7

Catalog 1308940
Revised 9-14

www.te.com

Dimensions are shown for reference purposes only. Specifications subject to change.

Dimensions are in millimeters unless otherwise specified.

USA: +1 800 522 6752
Asia Pacific: +86 0 400 820 6015
UK: +44 800 267 666

For additional support numbers please visit www.te.com

MIL 600 Style Connectors

Product Facts

- **Conforms to MIL-DTL-83527**
- **Sizes: 2, 3, 4**
- **Variety of contact inserts available**
- **Sealing features include grommets, interfacial seals, and wedge stabilizers**
- **Provides EMI shielding**

Material and Finish

Shell — Aluminum 2024 T4

Retainer Plates — Aluminum alloy

Finish — Chemical chromate conversion over cadmium plate per QQ-P-416

Polarizing Posts — Zinc alloy per ASTM B-86 with electroless nickel plating

Polarizing Keys — Stainless steel 303, passivated

Inserts — Thermoset or Thermoplastic

Grommets, Seals — Fluorosilicone rubber

Specifications

Temperature Range — -65°C to +125°C

Mating and Unmating Forces — Max after 10 cycles; connectors have a full complement of contacts

Size 2 — 325 lbs

Size 3 — 400 lbs

Size 4 — 475 lbs

Contact Retention against axial load — Per MIL-STD-1344, Method 2007

Size 22 — 12.0 lbs

Size 20 — 20.0 lbs

Size 16 — 25.0 lbs

Size 12 — 30.0 lbs

Size 8 — 25.0 lbs (twinax)

Size 5 — 25.0 lbs (coax)

Voltage/Current Ratings —

Contact	AWG	Max Current (A)
Size 22	22	5.0
Size 20	20	7.5
Size 16	16	13.0
Size 12	12	23.0

Dielectric Withstanding Voltage — Per MIL-STD-1344, Method 3001

Altitude	AC Volts Mated	60 Hz rms Unmated
Sea level	—	1300 (size 22)
Sea level	—	1500 (others)
50,000 ft	800	550
70,000 ft	800	350
100,000 ft	800	200

Insulation Resistance — Per MIL-STD-1344, Method 3003 1000 megohms min. at ambient and at 150°C

Contact Resistance — Per MIL-STD-1344, Method 3004 and 3002

Durability — Per MIL-STD-1344, Method 2016; 500 cycles minimum

Salt Spray Tolerance — Per MIL-STD-1344, Method 1001, test condition A; no evidence of exposure of base metal or build-up of corrosion that affects connector testing

Humidity Tolerance — Per MIL-STD-1344, Method 1002, Type II Insulation Resistance greater than 1000 megohms before, during and after test

Fluid Immersion — Per MIL-STD-1344, Method 1016, fluids tested: i) isopropyl alcohol, j) 1-1-1 trichloroethane, k) Freon TMC; no evidence of deterioration, distortion or material reversion

Temperature Cycling — Per MIL-STD-1344, Method 1003 except steps 2 and 4 are 2 minutes maximum duration; step 1 is -65°C; step 3 is +150°C

High Temperature Tolerance — 1000 hours min. at 150°C for wired, mated connectors

Vibration Testing — Per MIL-STD-1344, Method 2005 (Functional Test Curve: 2 hrs in each of 3 axes; Endurance Test Curve: 2.5 hrs in each of 3 axes); no discontinuity exceeding 1 microsecond, no visible evidence of cracking, breaking or loosening of parts

Shock Testing — Per MIL-STD-1344, Method 2004 (Test condition H: 30G, 11 ms, half sine); no discontinuity exceeding 1 microsecond, no visible evidence of cracking, breaking or loosening of parts

EMI Shielding — Per DOD-83527 (for a Size 2 shell)

EMI Shielding Eff. Frequency (MHz)	Leakage Attenuation (dB)
100	65
200	63
300	63
400	62
800	60
1000	60

Shell-to-Shell Conductivity — Per MIL-STD-1344, Method 3007; Potential drop does not exceed 2.5 millivolts

MIL-DTL-83527 Style Connectors

Descriptive Number	TE Connectivity Part Number
M6E2RC150-34WAA01A	1218044-1
M6E2PC150-34WAA01A	443965-1
M6E2PC150-34WAA01A	443102-1
M6E2RC150-100WAA01A	447142-1
M6E2PC24-34WAA01Z	447280-1
M6E2PC150-34WAA01A	443102-1
M6E2PC150-34WAA01A	443965-1
M6E2PC150-100WAA01A	447141-1
M6E3PC150-100-150-100WAA01A	447143-1
M6E3RC150-100-150-100WAA01A	447144-1

Dimensions are shown for reference purposes only. Specifications subject to change.

Dimensions are in millimeters unless otherwise specified.

USA: +1 800 522 6752
Asia Pacific: +86 0 400 820 6015
UK: +44 800 267 666

For additional support numbers please visit www.te.com

MIL 600 Style Connectors (Continued)

MIL-DTL-83527 Connector Sample Descriptive Part Number

M6 E 4RC 150-100-24-34-60-100 W AA 001 A

MIL 600 connector in accordance with MIL-DTL-83527

Sealing
E = Sealed per M83527: rear grommet, interfacial seal [rcpt only], o-ring around insert
F = Interfacial seal [rcpt only], o-ring around insert (no grommet)
G = O-ring around insert (no interfacial seal or grommet)
U = unsealed

Shell size & plating (see pages 4-42 to 4-44)
2 = shell size 2 with two insert cavities (A, B)
3 = shell size 3 with four insert cavities (A, B, C, D)
4 = shell size 4 with six insert cavities (A, B, C, D, E, F)

Shell Type
R = receptacle (for box)
P = plug (for rack or chassis)

Shell Plating
C = Cadmium plating (MIL-DTL-83527 standard plating)
N = Nickel plating

Insert Arrangement
Indicates the insert arrangements used within the shell. See available M83527 inserts below. If the shell has six inserts (as in this example) then six insert arrangements are identified. In this example, 150 is for the A cavity, 100 is for B cavity, 24 is for C cavity and so on.

Insert style (rear release/remove only)
W = All contacts rear release/rear remove, Military contacts per MIL-DTL-83527

Shell Modifications
AA = standard .151 inch [3.8 mm] diameter mounting holes

Keying (see page 4-15 and 4-16 for keying codes)

Contact Order Code (Contact part numbers listed on page 4-40)
Z = no contacts provided
A = rear release crimp signal & power contacts (size 22 through size 12) included; coax/triax/quadrax contacts ordered separately

Custom designs can be configured. Contact TE Connectivity for custom versions not defined above.

MIL-DTL-83527 Inserts

Available Insert Arrangements for Cavities A, C & E

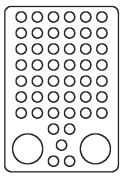

47T2
(47) #20
(2) #8 Twinax

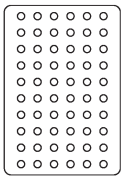

60
(60) #20

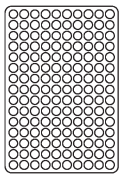

150
(150) #22

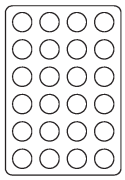

24
(24) #12

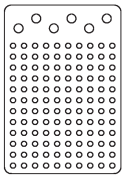

126
(120) #22
(6) #16

Available Insert Arrangements for Cavities B, D & F

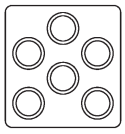

T6
(6) #8 Twinax

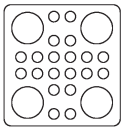

20T4
(20) #20
(4) #8 Twinax

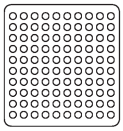

100
(100) #22

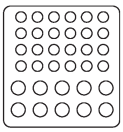

34
(24) #20
(10) #16

Dimensions are shown for reference purposes only. Specifications subject to change.

Dimensions are in millimeters unless otherwise specified.

USA: +1 800 522 6752
Asia Pacific: +86 0 400 820 6015
UK: +44 800 267 666

For additional support numbers please visit www.te.com

MIL 600 Style Connectors (Continued)

Insert Arrangements — Fiber Optics

Mini-Expanded Beam

Shell Module A, B, D or E

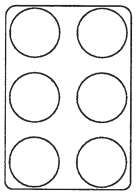

6MS

Shell Module C or F

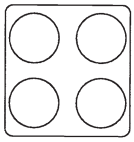

4MP

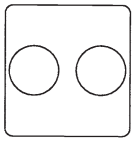

2MP

For ARINC 801 Optical Termini details, see page 4-14

Contact Arrangement

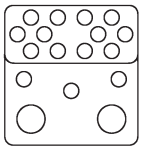

17F12Q2

Contact Arrangement

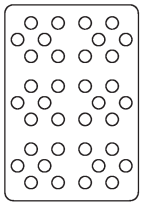

36F36

For Mini Expanded Beam insert details, see section 3.

Military 600 Connector Contact Selection Guide Crimp, Snap-In, Rear-Release Contacts

Pin Contacts

Contact Size	Wire Size AWG	Color Code	Contact Part Number	MIL Part Number (Reference)	Ins/Ext Tool Part Number
22	22-26	Gm/Wh/Violet	211901-5	MIL-C-39029/93-597	91066-1
20	20-24	Grn/Wh/Gray	208265-5	MIL-C-39029/93-598	91066-4
16	16-20	Grn/Or/Wh	213122-5	MIL-C-39029/93-539	91066-3
12	12-14	Grn/Ye1/Blk	213123-5	MIL-C-39029/93-540	445147-1

Socket Contacts

Contact Size	Wire Size AWG	Color Code	Contact Part Number	MIL Part Number (Reference)	Ins/Ext Tool Part Number
22	22-26	Blu/Blk/Brn	208264-4	MIL-C-39029/94-601	91066-1
20	20-24	Blu/Blk/Red	208267-4	MIL-C-39029/94-602	91066-4
16	16-20	Blu/Blk/Or	208270-4	MIL-C-39029/94-603	91066-3
12	14-Dec	Blu/Blk/Yel	208273-4	MIL-C-39029/94-604	445147-1

Size 8 Concentric Twinax Contacts

Contact Style	For Cable	Contact Part Number	Ins/Ext Tool Part Number
Pin	M17-176-00002	222190-4	58284-1
Socket	M17-176-00002	222191-4	58584-1

Size 12 Shielded Contacts

Contact Style	For Cable	Contact Part Number	MIL Part Number (Reference)	Ins/Ext Tool Part Number
Pin	M17-176-00002	213156-1	M39029/74-400	445147-1
Socket	M17-176-00002	213157-1	M39029/73-397 (with exceptions)	445147-1

Dimensions are shown for reference purposes only. Specifications subject to change.

Dimensions are in millimeters unless otherwise specified.

USA: +1 800 522 6752
Asia Pacific: +86 0 400 820 6015
UK: +44 800 267 666

For additional support numbers please visit www.te.com

MIL 600 Style Connectors (Continued)

MIL-DTL-83527 Shell Configurations with ARINC 600 Style Inserts and Contacts Sample Descriptive Part Number

Note: These connectors do not meet the performance requirements of MIL-DTL-83527.

A6 P 4RN 150-13C2-Q11-24-6MP-100 W AA 01 A

MIL-DTL-83527 shell with ARINC 600 inserts and contacts

Sealing (no interfacial seals available)
P = Rear grommet only, no RTV sealant between insert & shell
R = Rear grommet, RTV sealant between insert & shell
S = RTV sealant between insert & shell, no grommet
U = unsealed

Shell size & plating (see pages 4-42 to 4-44)
2 = shell size 2 with two insert cavities (A, B)
3 = shell size 3with four insert cavities (A, B, C, D)
4 = shell size 4 with six insert cavities (A, B, C, D, E, F)

Shell Type
R = receptacle (for box)
P = plug (for rack or chassis)

Shell Plating
C = Cadmium plating (MIL-DTL-83527 standard plating)
N = Nickel plating

Insert Arrangement (See available ARINC 600 style inserts on pages 4-10 and 4-11)
Indicates the insert arrangements used within the shell.
If the shell has six inserts (as in this example) then six insert arrangements are identified.
In this example, 150 is for the A cavity, 13C2 is for B cavity, Q11is for C cavity and so on.
Note: ARINC 600 style inserts do not include interfacial seals or o-rings and do not meet the MIL-DTL-83527 contact locations.

Insert style (front release/remove or rear release/remove); all contacts are ARINC 600 style contacts
W = All contacts rear release/rear remove (plug or receptacle)
X = All contacts front release/front remove (receptacle only)
Y = All signal (size 22) front release/front remove; all other sizes rear release/rear remove (receptacle only)
Note: ARINC 600 contacts are not Military qualified contacts and do not meet the MIL-DTL-83527 contact locations.

Shell Modifications
AA = standard .151 inch [3.8 mm] diameter mounting holes

Keying (see page 4-15 for keying codes)

Contact Order Code (see pages 4-19 to 4-25 and 442 to 4-47 for ARINC 600 style contacts)
Z = no contacts provided
A = rear release crimp signal & power contacts (size 22 through size 12) included; coax/triax/quadrax contacts ordered separately.
B = .250 post extension front release contacts loaded into connector; all other contacts are ordered separately.
C = .250 post extension front release contacts loaded into connector; rear release crimp contacts (size 20 through size 12) included with connector kit; rear release crimp coax/triax/quadrax contacts ordered separately.
D = same as B except .150 post extension.
E = same as C except .150 post extension.
F = same as B except .375 post extension.
G = same as C except .375 post extension.
H = same as B except .500 post extension.
J = same as C except .500 post extension.

Custom designs can be configured. Contact TE Connectivity for custom versions not defined above.

Catalog 1308940
Revised 9-14
www.te.com

Dimensions are shown for reference purposes only. Specifications subject to change.
Dimensions are in millimeters unless otherwise specified.
USA: +1 800 522 6752
Asia Pacific: +86 0 400 820 6015
UK: +44 800 267 666
For additional support numbers please visit www.te.com

MIL 600 Style Connectors (Continued)

Receptacle Size 2

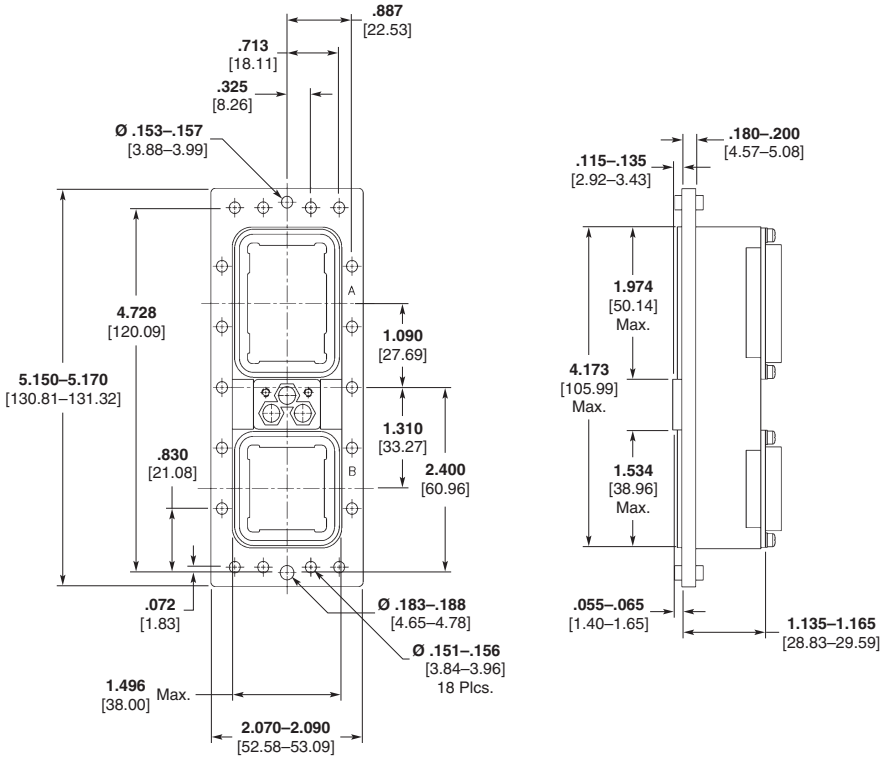

Plug Size 2

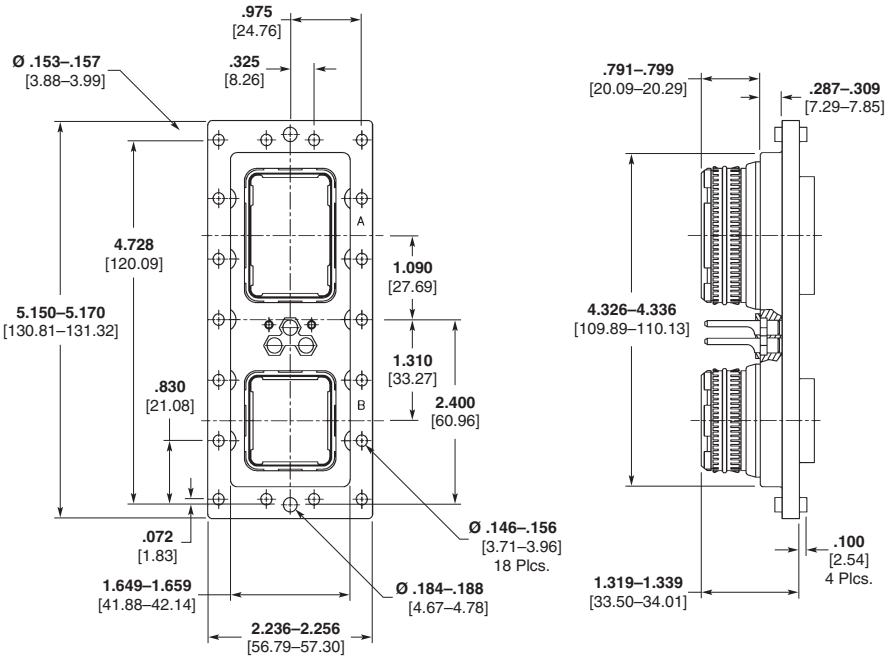

Dimensions are shown for reference purposes only. Specifications subject to change.

Dimensions are in millimeters unless otherwise specified.

USA: +1 800 522 6752
Asia Pacific: +86 0 400 820 6015
UK: +44 800 267 666

For additional support numbers please visit www.te.com

MIL 600 Style Connectors (Continued)

Receptacle Size 3

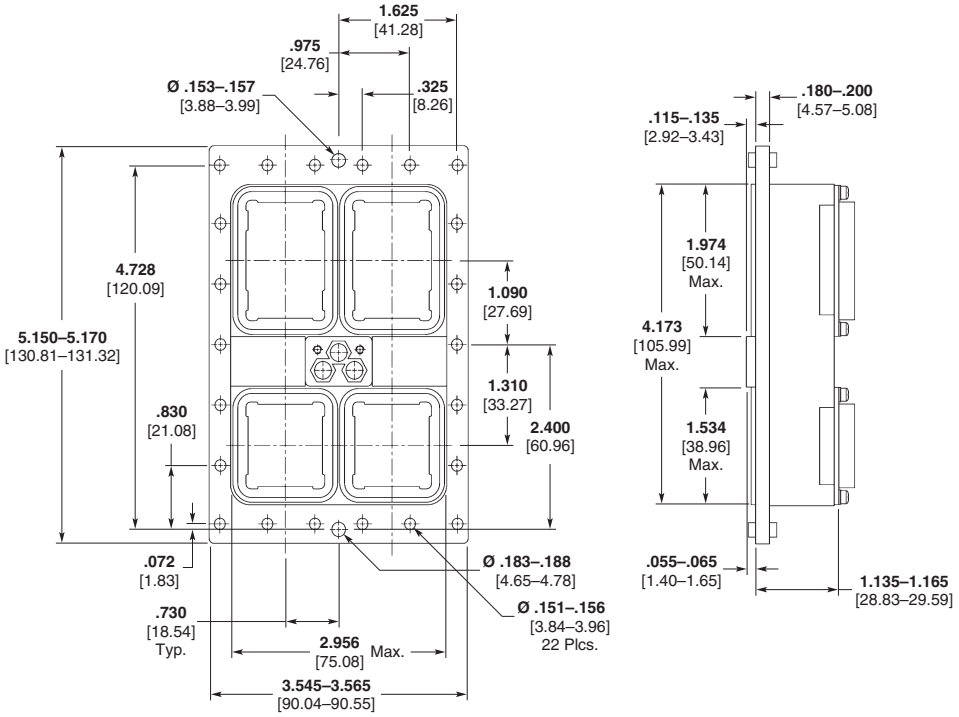

Plug Size 3

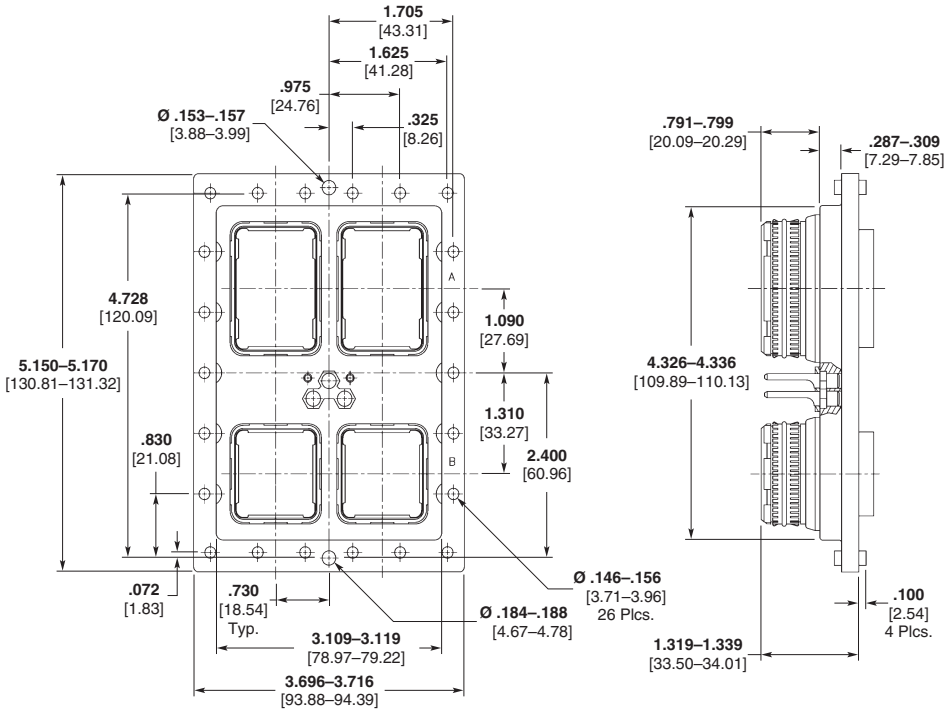

Catalog 1308940
Revised 9-14

www.te.com

Dimensions are shown for reference purposes only. Specifications subject to change.

Dimensions are in millimeters unless otherwise specified.

USA: +1 800 522 6752
Asia Pacific: +86 0 400 820 6015
UK: +44 800 267 666

For additional support numbers please visit www.te.com

MIL 600 Style Connectors (Continued)

Receptacle Size 4

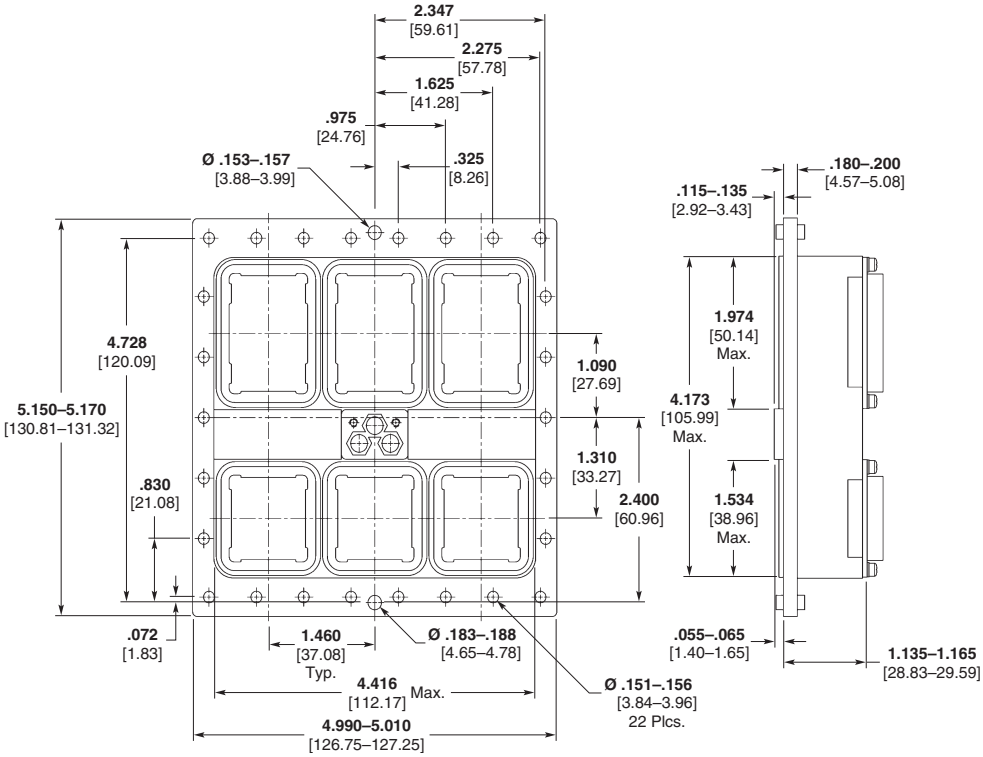

Plug Size 4

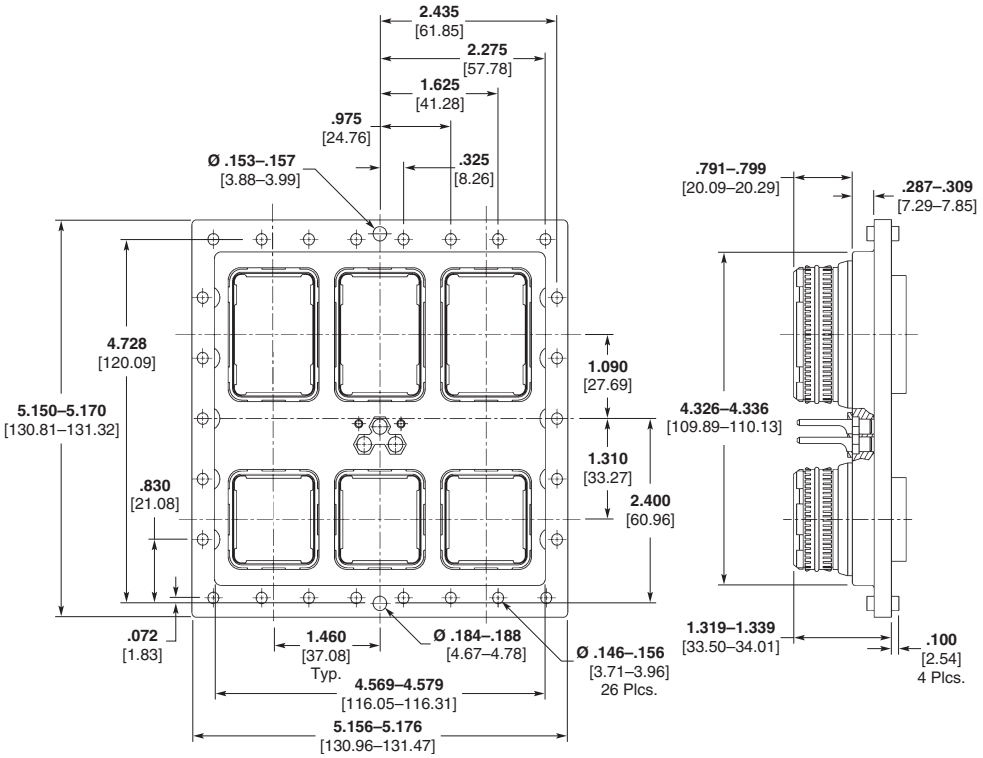

Dimensions are shown for reference purposes only. Specifications subject to change.

Dimensions are in millimeters unless otherwise specified.

USA: +1 800 522 6752
Asia Pacific: +86 0 400 820 6015
UK: +44 800 267 666

For additional support numbers please visit www.te.com

Introduction

Connectors with wide range of shell configurations/ modifications, contact arrangements and contacts to meet ARINC 404 Specifications. The descriptive part numbering scheme described on the following pages can be used for ordering.

Commercial Series

R — Unsealed

RM — Interface seal on pin insert

RME — Environmentally sealed

Unkeyed Single-Insert Series

RMA — Standard size, unkeyed single-insert connectors, unsealed

RMAE — same as RMA, except sealed

Military Series

M — MIL equivalent, unsealed

MM — MIL equivalent, interface seal on pin inserts

MME — MIL equivalent, environmentally sealed

Miniature Series

RA — Unsealed

RE — Sealed

Special connectors are also available — including connectors for flexible flat cable, for wire wrap-type terminations, and with contacts for board-mount applications.

Screw-machined pin and socket contacts for connector inserts — signal contact sizes 22, 20, 16 and 12 for terminating wire range of 30 through 12 AWG [0.05–3 mm]. Crimp snap styles for rear-remove, rear-release applications are most common. They can be supplied both in loose-piece form, or can be tape-mounted for high-speed application.

Coax contact sizes 1, 3, 5, 7, 10 and 15 are available.

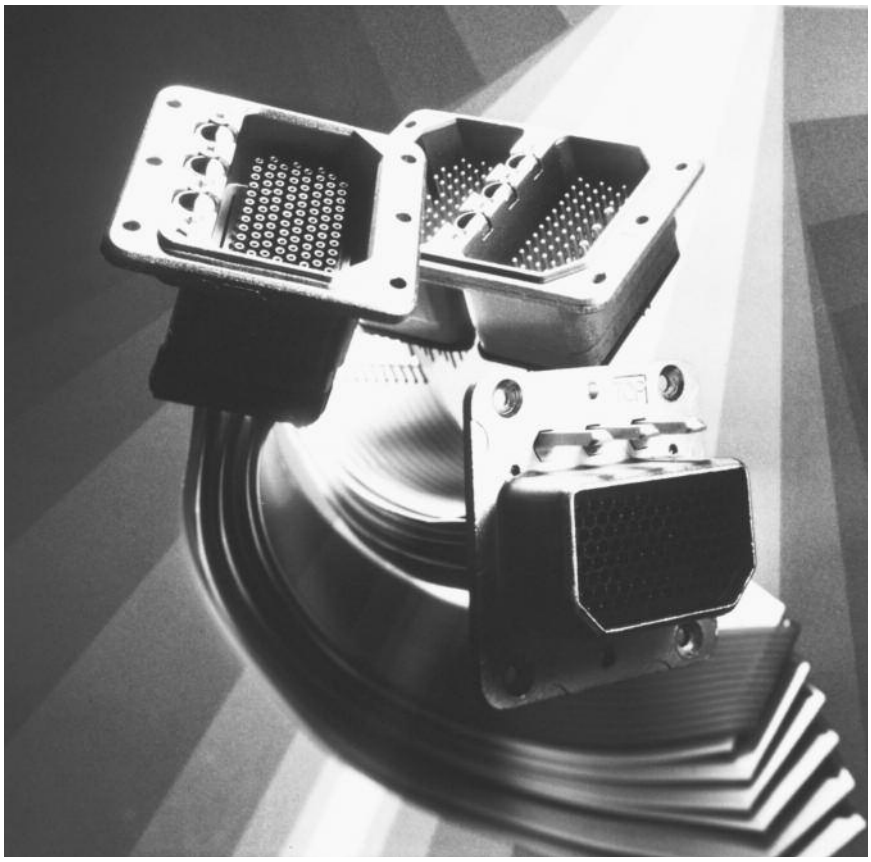

Material Specifications

Shell — Die-cast aluminum alloy per QQ-A-591; cadmium plated with yellow chromate conversion, or electroless nickel plated per QQ-P-416

Insert Retention Plates — (M, MM, R, RM, RME series) Aluminum alloy, blue anodized per MIL-A-8625 or electroless nickel plated per QQ-P-416; (MME series) Aluminum alloy, powder coat blue epoxy; (RA, RE series) Stainless steel, passivated

Screws and Washers — Stainless steel, passivated

Dielectric Hard — Epoxy

Dielectric, Interface Seal (Receptacle only) and Wire Sealing Grommets — Silicone rubber

Keying Posts and Nuts (Plug Only) — Stainless steel, passivated

Keyways (Receptacle Only) — Commercial — Aluminum

Performance Specifications

Environmentally sealed RME series connectors are designed per Military Specification MIL-C-81659 and all signal pin and socket contacts per MIL-C-39029.

Insulation Resistance — 5000 megohms

Dielectric Withstanding Voltage (Unmated at Sea Level) —

Test (contact arrangements 32C2, 33C4, 67 & 106)	1000 volts rms
(all other contact arrangements, except C2 & C3)	1500 volts rms
Operate (contact arrangements 33C4, 67 & 106)	400 volts rms
(all other contact arrangements, except C2 & C3)	500 volts rms

Temperature Range — -85°F to 257°F [-65°C to +125°C]

Contact Current Rating (tested in free air per MIL-C-34029) — (See pages 4-56 to 4-58 for information on coaxial contacts)

Size 22 (22 AWG wire) [0.3-0.4 mm^2] 5.0 amps
Size 20 (20 AWG wire) [0.5-0.6 mm^2] 7.5 amps
Size 16 (16 AWG wire) [1.25-1.4 mm^2] 13.0 amps
Size 12 (12 AWG wire) [3 mm^2] 23.0 amps

Contact Retention —

Size 22	15 lb. (min.) [67 N]
Size 20	20 lb. (min.) [89 N]
Size 16	25 lb. (min.) [92 N]
Size 12	30 lb. (min.) [134 N]

Durability (Mating and Unmating) — 500 cycles

Salt Spray — MIL-STD-1344, Method 1001, Condition B

Vibration — MIL-STD-1344, Method 2005, Condition IV

Catalog 1308940
Revised 9-14

www.te.com

Dimensions are shown for reference purposes only. Specifications subject to change.

Dimensions are in millimeters unless otherwise specified.

USA: +1 800 522 6752
Asia Pacific: +86 0 400 820 6015
UK: +44 800 267 666

For additional support numbers please visit www.te.com

Ordering Information

Descriptive Part Numbering System

Use this page as a guide to construct part numbers for complete connector packages. Contacts must be ordered separately, except as specified in the Custom Order Code.

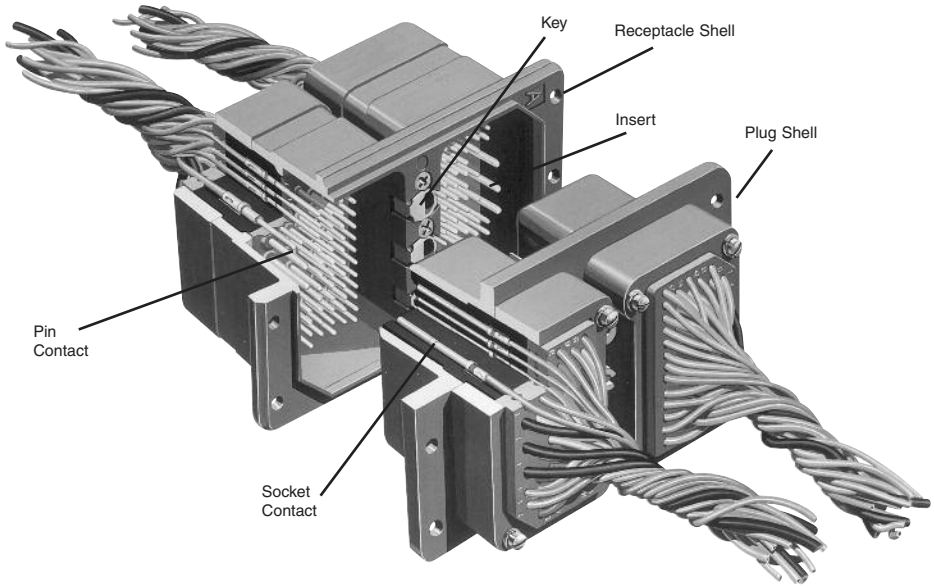

Note: Two-Insert Recept. Shell Dlm. (Typ.)—3.075 [78.11] L x 2.000 [50.8] W x 1.665 [42.29] Depth

Single-insert receptacle connector shown
RM 1 R 106S-00 01 (200)

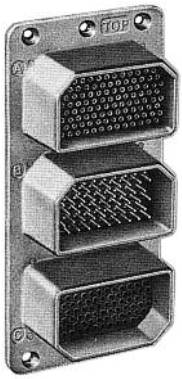

Three-insert plug connector shown
RM 3 P 106S 57P 106-00 00 (200)

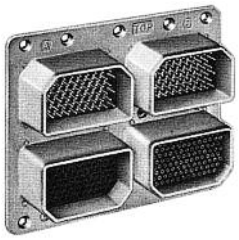

Four-insert plug connector shown
RME 4 P 106P 106P 106 106S 00 00 (250)

Sample Descriptive Part Number

RME 2 P 57 S 57 S — 00 01 (201)

Shell
Series designator:
R, M—no seals
RM, MM—interface seal on pin inserts
RME, MME—environmentally sealed
RMA—standard insert size, no keying, unsealed
RMAE—standard interface, no keying, environmentally sealed
RA—miniature, unsealed
RE—miniature, environmentally sealed

Shell size
1, 2, 3 or 4 inserts, modules A, B, C, D

Shell configuration
P—Plug
R—Receptacle

Contact inserts

Contact arrangement (Module A) (see page 4-47)

Contact type (Module A)
P—Pin
S—Socket

Contact arrangement (Module B) (see page 4-47)

Contact type (Module B)

Modifications to shell mounting (see pages 4-50 and 4-51)

Keying (see page 4-52)

Custom order instructions (see page 4-52)

Contacts (see pages 4-53 and 4-54 for ordering details)

Sealing boots

SPECIAL CONNECTORS
- Wrap-type assemblies
- Assemblies for flexible flat cable
- RA, RE shells and inserts
- RMA shell

Note: RMA/RMAE are only available in single-insert unkeyed shells.

Catalog 1308940
Revised 9-14

www.te.com

Dimensions are shown for reference purposes only. Specifications subject to change.

Dimensions are in millimeters unless otherwise specified.

USA: +1 800 522 6752
Asia Pacific: +86 0 400 820 6015
UK: +44 800 267 666

For additional support numbers please visit www.te.com

One- and Two-Insert Shells

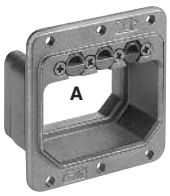

One-Insert Shells
(Receptacle Shown)

Example: RME 1 P 57S — 00 01 (200)

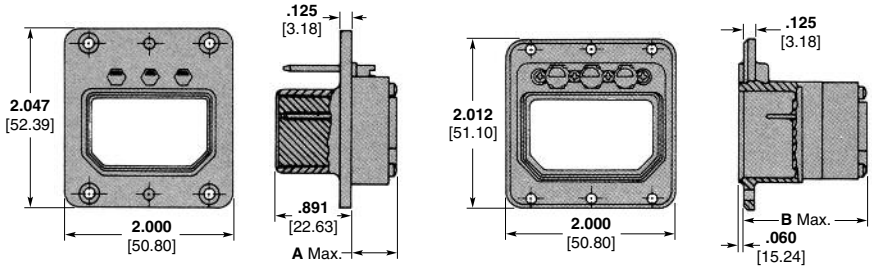

Plug Receptacle

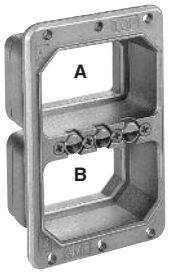

Two-Insert Shells
(Receptacle Shown)

Example: RM 2 P 57S 57S — 00 01 (200)

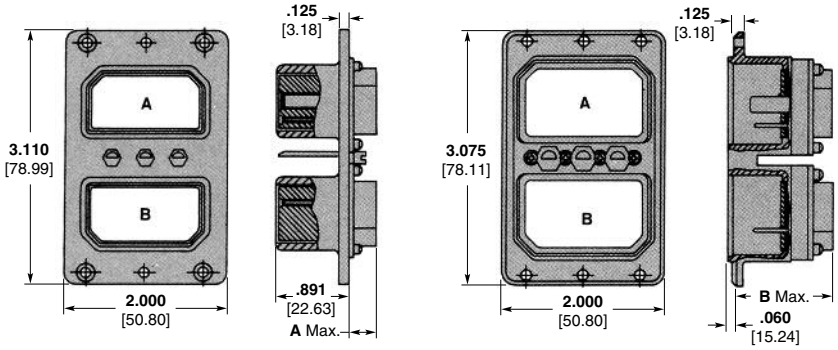

Plug Receptacle

Maximum extension of connector behind flange, with insert.

Contact Arrangement	Dimensions			
	A Max. (Plug)		B Max. (Receptacle)	
	R, M, RM, MM	RME, MME	R, M, RM, MM	RME, MME
C2	**.075** 1.91	**.075** 1.91	**1.016** 25.81	**1.016** 25.81
C3	**.075** 1.91	**.075** 1.91	**1.016** 25.81	**1.016** 25.81
8	**.314** 7.98	**.534** 13.56	**1.253** 31.83	**1.465** 37.21
C8	**.512** 13.00	—	**1.452** 36.88	—
D8	**.314** 7.98	**.534** 13.56	**1.253** 31.83	**1.465** 37.21
26	**.314** 7.98	**.534** 13.56	**1.253** 31.83	**1.465** 37.21
32C2	**.529** 13.44	**.734** 18.64	**1.465** 37.21	**1.665** 42.29
32C4	**.410** 10.41	**.615** 15.62	**1.350** 33.86	**1.555** 39.50
33C4	**.529** 13.44	**.734** 18.64	**1.465** 37.21	**1.665** 42.29
40	**.314** 7.98	**.534** 13.56	**1.253** 31.83	**1.465** 37.21
40C1	**.529** 13.44	**.734** 18.64	**1.465** 37.21	**1.665** 42.29
45	**.314** 7.98	**.534** 13.56	**1.253** 31.83	**1.465** 37.21
57	**.314** 7.98	**.534** 13.56	**1.253** 31.83	**1.465** 37.21
67	**.314** 7.98	**.534** 13.56	**1.253** 31.83	**1.465** 37.21
106	**.075** 1.91	**.279** 7.09	**1.016** 25.81	**1.219** 30.96

Catalog 1308940
Revised 9-14

www.te.com

Dimensions are shown for reference purposes only. Specifications subject to change.

Dimensions are in millimeters unless otherwise specified.

USA: +1 800 522 6752
Asia Pacific: +86 0 400 820 6015
UK: +44 800 267 666

For additional support numbers please visit www.te.com

Three- and Four-Insert Shells

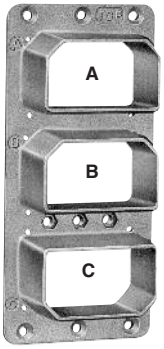

Three-Insert Shells
(Plug Shown)

Example: RME 3 P 57S 57S 57S — 00 01 (200)

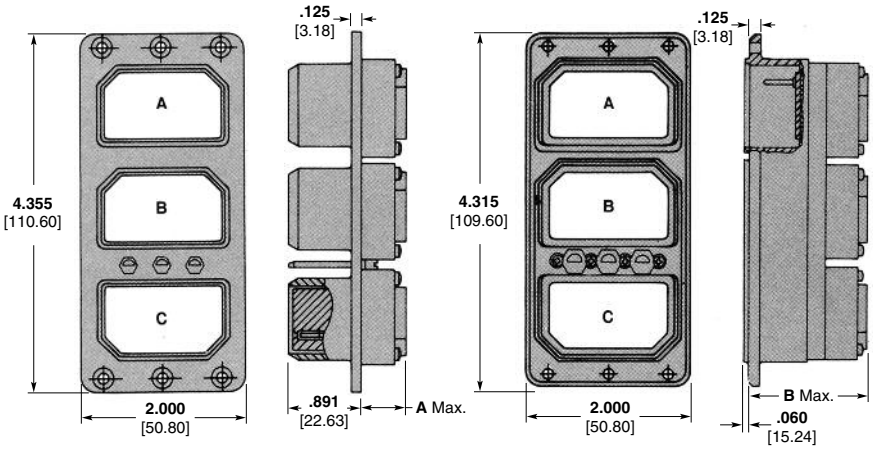

Plug

Receptacle

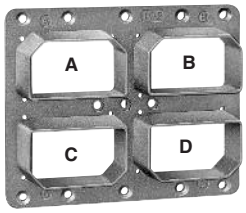

Four-Insert Shells
(Plug Shown)

Example: RME 4 P 57S 57S 57S 57S — 00 01 (200)

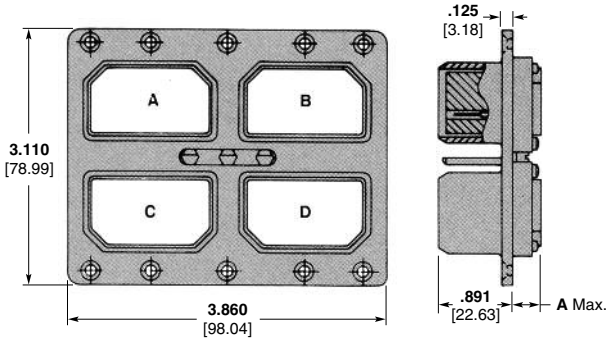

Plug

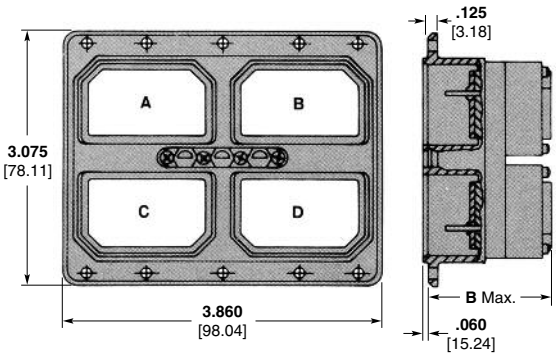

Receptacle

Note: Dimensions A and B refer to maximum connector depth with contact inserts installed. These dimensions are tabulated on page 4-47.

Dimensions are shown for reference purposes only. Specifications subject to change.

Dimensions are in millimeters unless otherwise specified.

USA: +1 800 522 6752
Asia Pacific: +86 0 400 820 6015
UK: +44 800 267 666

For additional support numbers please visit www.te.com

Contact Inserts

Inserts for Series R, RM, RME; M, MM, MME, and RMA

Arrangement 106, environmental version shown

Legend

- Size 22 contact cavity
- Size 20 contact cavity
- Size 16 contact or Size 15 COAXICON contact cavity
- Size 12 contact cavity
- COAXICON contact cavity, except Size 15

Notes: 1. Size 22 socket contacts extend beyond the mating face of inserts; size 22 pin contacts are recessed. Size 20, 16 and 12 pins are exposed; size 20, 16 and 12 sockets are recessed.
2. Mating face of pin-contact insert is shown. Socket-contact insert face is mirror image.

Arrangement 33C4 shown

Example: RME 2 P 57S 67S — 00 01 (201)

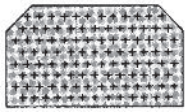

Arrangement 106
106 Size 22 contacts

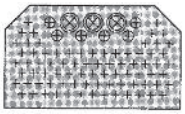

Arrangement 88
79 Size 22 contacts,
6 Size 20 contacts,
3 Size 16 contacts or
3 Size 15 COAXICON contacts

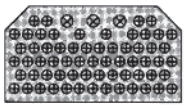

Arrangement 67
64 Size 20 contacts,
3 Size 16 contacts or
3 Size 15 COAXICON contacts

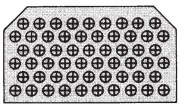

Arrangement 57
57 Size 20 contacts

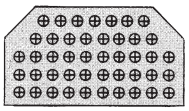

Arrangement 45
45 Size 20 contacts

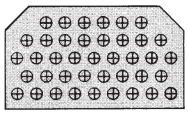

Arrangement 40
40 Size 20 contacts

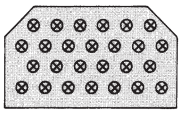

Arrangement 26
26 Size 16 contacts or
26 Size 15 COAXICON contacts

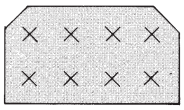

Arrangement 8
8 Size 12 contacts

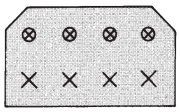

Arrangement D8
4 Size 12 contacts,
4 Size 16 contacts or
4 Size 15 COAXICON contacts

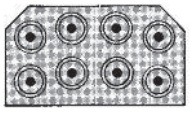

Arrangement C8
8 Size 9 COAXICON contacts
For unsealed connectors only

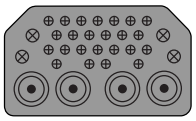

Arrangement 32C4
4 Size 16 contacts,
24 Size 20 contacts and
4 Size 9 COAXICON contacts

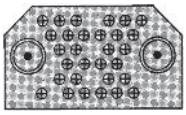

Arrangement 32C2
30 Size 20 contacts,
2 Size 5 COAXICON contacts

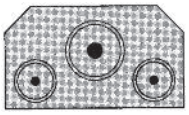

Arrangement C3
1 Size 3 COAXICON contact,
2 Size 7 COAXICON contacts
For unsealed connectors only
(Consult TE for availability.)

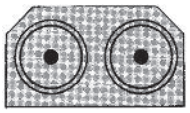

Arrangement C2
2 Size 1 COAXICON contacts
For unsealed connectors only
(Consult TE for availability.)

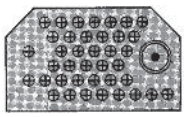

Arrangement 40C1
39 Size 20 contacts,
1 Size 5 COAXICON contact

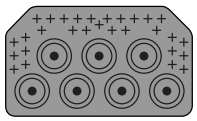

Arrangement 36C7
7 Size 5 COAXICON contacts,
29 Size 22 contacts

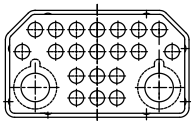

Arrangement 2202
2 Size 8 Quadrax contacts
20 Size 16 contacts

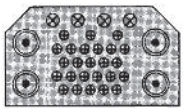

Arrangement 33C4
25 Size 20 contacts
4 Size 16 contacts or
4 Size 15 COAXICON contacts,
4 Size 5 COAXICON contacts

Inserts for Fiber Optic Connectors

Inserts available to accept Mini-Expanded Beam Fiber Optic Cable Assemblies. Custom design configurations can be provided.

Contact TE Connectivity for additional information, or see page 4-14 in ARINC 600 section, and Expanded Beam Fiber Optics section 3.

ARINC 404 Insert Holders for Mini Expanded Beam Contacts

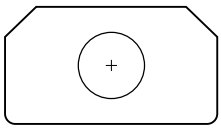

ARINC 404, 1 Position, M1

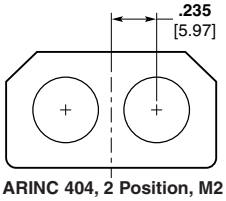

ARINC 404, 2 Position, M2

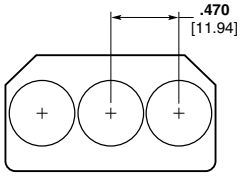

ARINC 404, 3 Position, M3

Catalog 1308940
Revised 9-14

www.te.com

Dimensions are shown for reference purposes only. Specifications subject to change.

Dimensions are in millimeters unless otherwise specified.

USA: +1 800 522 6752
Asia Pacific: +86 0 400 820 6015
UK: +44 800 267 666

For additional support numbers please visit www.te.com

Modifications

Example: RME 2 P 57S 57S — 00 01 (201)

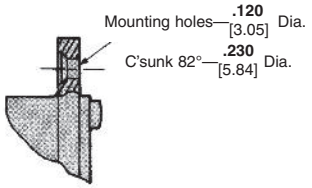

Modification 00
(no modification, plug)

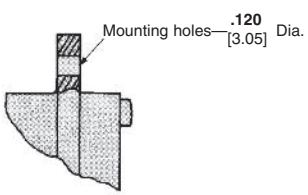

Modification 00
(no modification, receptacle)

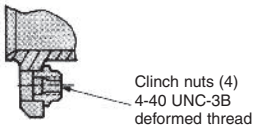

Modification 01

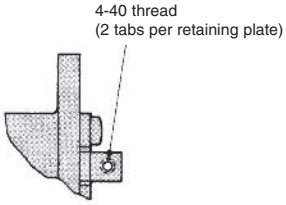

Modification 02
(R, RM, M, MM—attaching tabs)

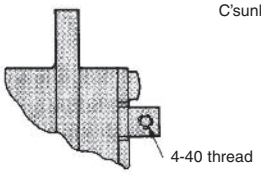

Modification 02, 70
(RME, MME—threaded holes)

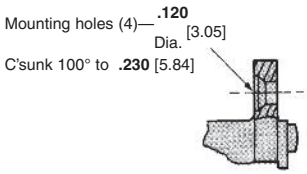

Modification 03

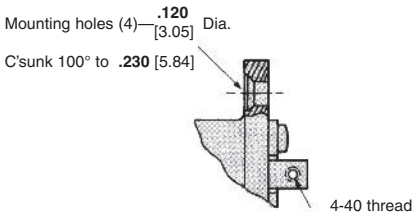

Modification 04
(R, RM, M, MM—attaching tabs)

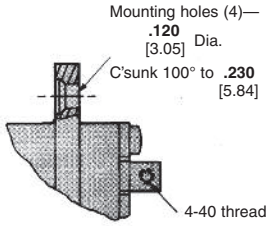

Modification 04
(RME, MME—threaded holes)

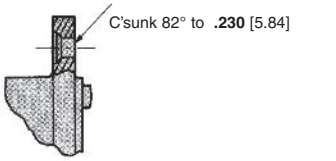

Modification 08

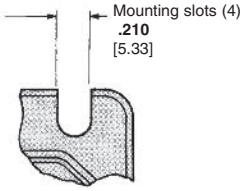

Modification 12

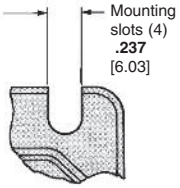

Modification 13

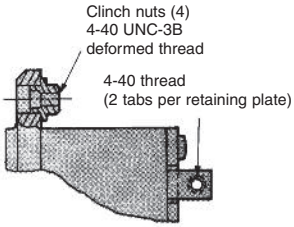

Modification 17
(R, RM, M, MM—attaching tabs)

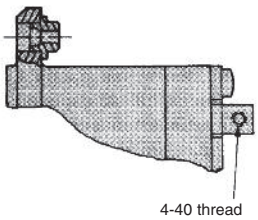

Modification 17
(RME, MME—threaded holes

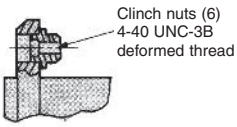

Modification 18

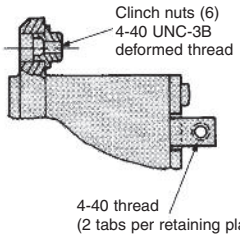

Modification 19
(R, RM, M, MM—attaching tabs)

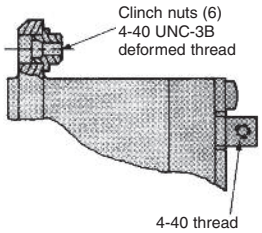

Modification 19
(RME, MME—threaded holes)

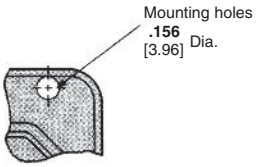

Modification 20

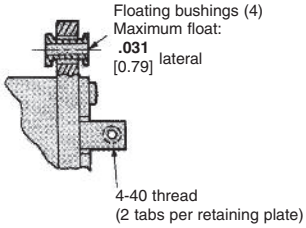

Modification 22
(R, RM, M, MM—attaching tabs)

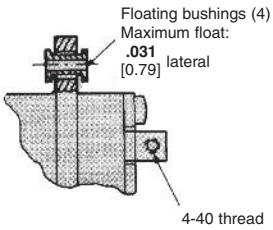

Modification 22, 71
(RME, MME—threaded holes)

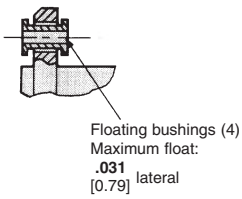

Modification 23, 39

Modifications (Continued)

Example: RME 2 P 57S 57S — 39 01 (201)

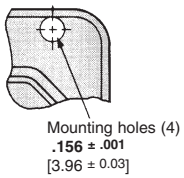

Modification 25

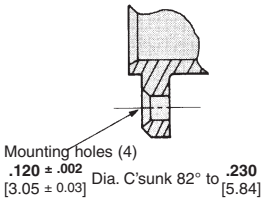

Modification 26

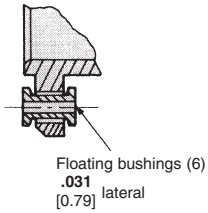

Modification 29

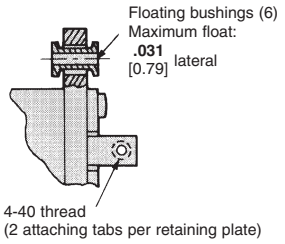

Modification 30
(R, RM, M, MM—attaching tabs)

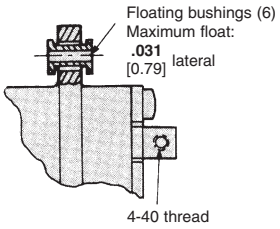

Modification 30
(RME, MME—threaded holes)

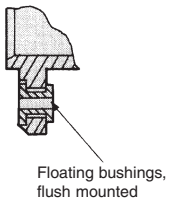

Modification 33

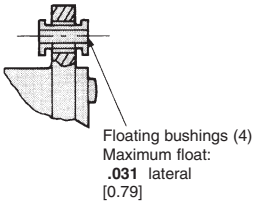

Modification 39

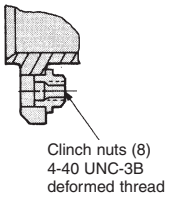

Modification 42
(4-Insert Shells)

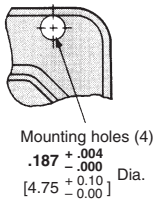

Modification 46

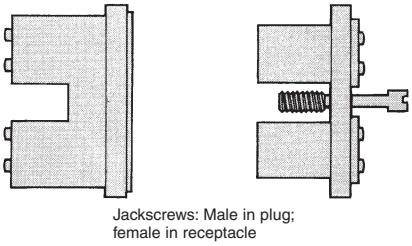

Modification 50

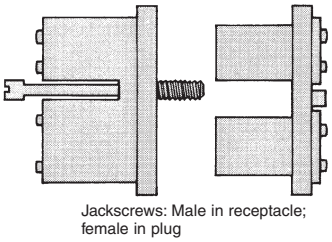

Modification 51

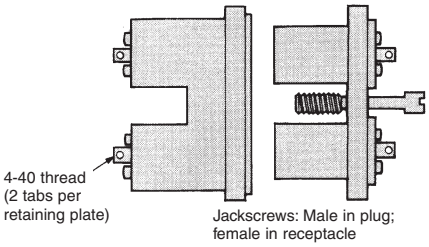

Modification 52
(R, RM, M, MM—attaching tabs)

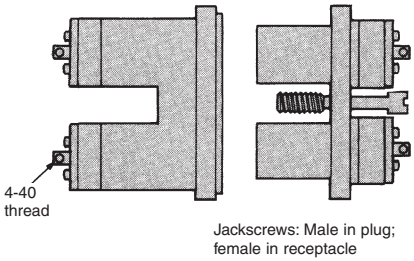

Modification 52
(RME, MME—threaded holes)

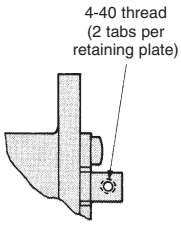

Modification 72
modification 46,
plus tabs above

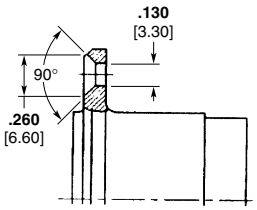

Modification 73 (without tabs)
Modification 74 (with tabs)
Size 1, 2, 3 shells — 4 c'sunk holes
Size 4 shells — 6 c'sunk holes

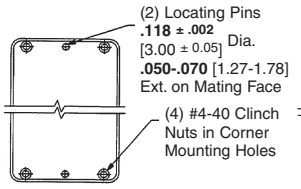

Modification 76

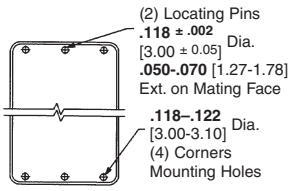

Modification 77

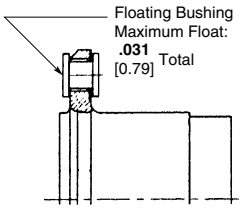

Modification 78

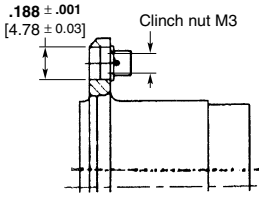

Modification 79

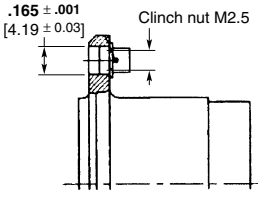

Modification 80

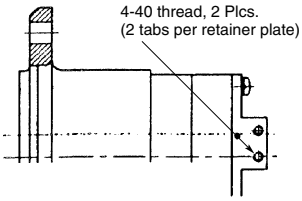

Modification 88

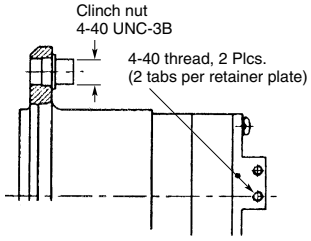

Modification 89

Catalog 1308940
Revised 9-14

www.te.com

Dimensions are shown for reference purposes only. Specifications subject to change.

Dimensions are in millimeters unless otherwise specified.

USA: +1 800 522 6752
Asia Pacific: +86 0 400 820 6015
UK: +44 800 267 666

For additional support numbers please visit www.te.com

Keying

Example: RME 2 P 57 S 57 S — 00 01 (201)

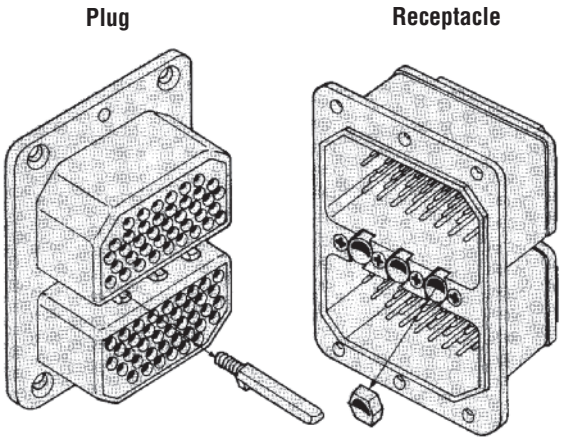

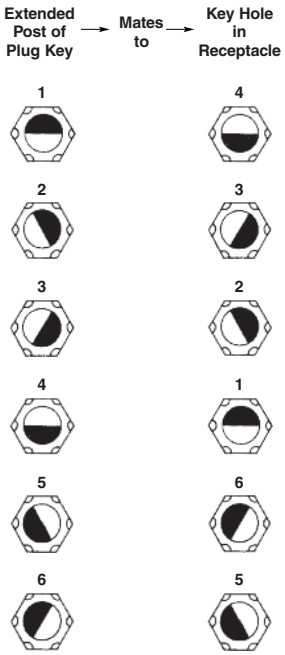

Notes:
1. Darkened portion of diagram indicates extended post of plug key, light portion indicates key hole in receptacle insert.
2. Keying code stamped on housing.
3. If keying code is not specified, key inserts are supplied in 01 position; code is not stamped on housing.
4. If code 00 is specified, keys are omitted and must be ordered separately; code is not stamped on housing.
5. Key diagrams show mating face of connector "TOP" up.

Refer to ARINC 600 pages 4-15 and 4-16 for keying codes.

Custom Order Code

Example: RME 2 P 57 S 57 S — 00 01 (201)

Code	Description
200	Standard connector kit, **including signal contacts;** order coaxial contacts separately. Shell finish: cadmium plated per QQ-P-416 with yellow chromate conversion.
201	200 Custom Order Code **without contacts,** contacts must be ordered separately by part number.
202	201 Custom Order Code with assembled connector, keying unassembled and packaged in a separate container, contacts must be ordered separately by part number.
203	200 Custom Order Code with inserts and retainer plates unassembled.
204	200 Custom Order Code with spare contacts—3% of contact population per connector per contact size.
206	200 Custom Order Code with keying unassembled and packaged in a separate container.
250	200 Custom Order Code, except shell and retainer plates plated electroless nickel.
400	200 Custom Order Code, except contacts are low insertion force, ARINC 600.

Dimensions are shown for reference purposes only. Specifications subject to change.

Dimensions are in millimeters unless otherwise specified.

USA: +1 800 522 6752
Asia Pacific: +86 0 400 820 6015
UK: +44 800 267 666

For additional support numbers please visit www.te.com

Size 22 Contacts — Pin Diameter .030 [0.76]

Standard Contacts

Materials

Pin and Socket Body — Copper alloy, plated gold over nickel

Socket Sleeve — Passivated stainless steel

Application Tooling — See page 4-55

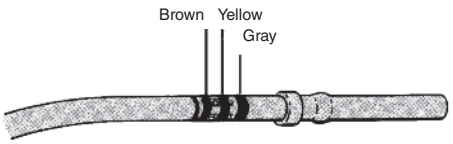

Socket
M39029/12-148

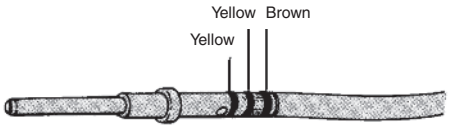

Pin
M39029/11-144

Contact Type	Wire Size AWG mm²	Insulation Diameter (Max.)	Tape Mounted Contacts		Loose Piece Contacts		Hand Crimping Tool		AMP-TAPETRONIC Stripper-Crimper	
			Pin	Socket	Pin	Socket	Tool	Positioner	Machine	Funnel
MIL-C-39029	**26-22** 0.12-0.4	**.054** 1.37	204873-3	—	204873-4	205103-3	M22520/2-01	M22520/2-23	599406-7	1-125905-2
Low Force, ARINC 600 connector contacts, suitable for use in ARINC 404 connectors (see page 4-19)										
Low Force ARINC 600*	**26-22** 0.12-0.4	**.054** 1.37	—	—	208262-3	208264-2	M22520/2-01	M22520/2-23	—	—

*Color coding, two bands: orange and green.

Round Solder-Post Contacts, Solder Post Diameter .031 [0.79]

Note: Round solder-post contacts are for use in RM series connectors.

Materials

Pin and Socket Body — Copper alloy, plated gold over copper

Socket Sleeve — Passivated stainless steel

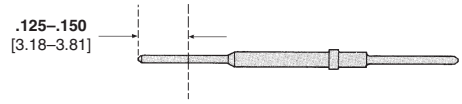

Round Solder-Post Pin
Part Number 205753-2 (Loose Piece)

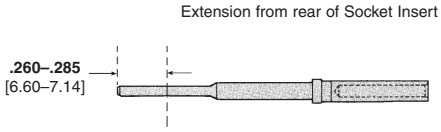

Round Solder-Post Socket (Loose Piece)
Part Number 205544-1 — .031 [0.79] Dia. Tail
Part Number 205544-2 — .023 [0.58] Dia. Tail

Insertion and extraction tool for all ARINC 404 size 22 contacts:
MS81969/1-01
Part Number 91066-1

Size 20 Contacts — Pin Diameter .040 [1.02]

Standard Contacts

Materials

Pin and Socket Body — Copper alloy, plated gold over nickel

Socket Sleeve — Passivated stainless steel

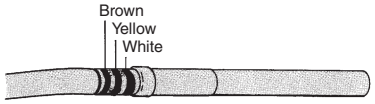

Socket
M39029/12-149

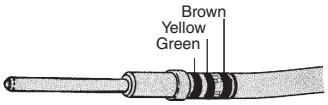

Pin
M39029/11-145

Contact Type	Wire Size AWG mm²	Insulation Diameter (Max.)	Tape Mounted Contacts		Loose Piece Contacts		Hand Crimping Tool		AMP-TAPETRONIC Stripper-Crimper	
			Pin	Socket	Pin	Socket	Tool	Positioner	Machine	Funnel
MIL-C-39029	**24-20** 0.2-.06	**.071** 1.80	204938-4	205116-2	204938-3	205116-1	M22520/2-01	M22520/2-08	599406-7	125905-1
Type XVII	**30-26** 0.05-0.15	**.071** 1.80	205791-4	—	205791-3	205116-5	M22520/2-01	M22520/2-08	599406-7	2-125905-4
Low Force, ARINC 600 connector contacts, suitable for use in ARINC 404 connectors (see page 4-19)										
Low Force ARINC 600*	**24-20** 0.2-0.6	**.071** 1.80	208265-4	—	208265-3	208267-2	M22520/2-01	M22520/2-08	599406-7	125905-1

*Color coding, two bands: orange and red.

Round Solder-Post Contact, Solder Post Diameter .031 [0.79]

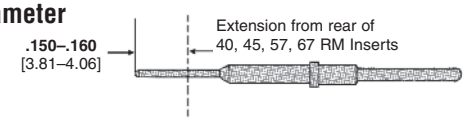

Round Solder-Post Pin
Part Number 205547-2 (Loose Piece)

Material — Copper alloy, plated gold over nickel

Wrap-Type Posted Pin, .025 [0.64] Square Post

A	Part Number
.430 10.92	206210-2
.685 17.4	206210-4
.185 4.7	206210-6

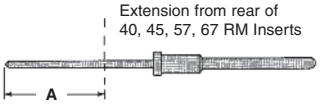

Insertion and Extraction Tool for all ARINC 404 size 20 contacts:
MS81969/1-02
Part Number 91067-2

Catalog 1308940
Revised 9-14

www.te.com

Dimensions are shown for reference purposes only. Specifications subject to change.

Dimensions are in millimeters unless otherwise specified.

USA: +1 800 522 6752
Asia Pacific: +86 0 400 820 6015
UK: +44 800 267 666

For additional support numbers please visit www.te.com

Size 16 Contacts — Pin Diameter .062 [1.58]

Standard Contacts

Materials

Pin and Socket Body — Copper alloy, plated gold over nickel

Socket Sleeve — Passivated stainless steel

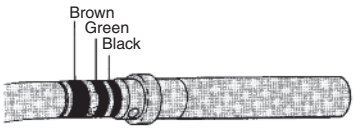

Socket
M39029/12-150

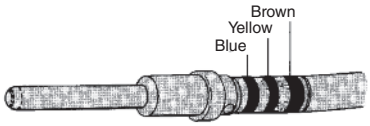

Pin
M39029/11-146

Contact Type	Wire Size AWG mm²	Insulation Diameter (Max.)	Tape Mounted Contacts		Loose Piece Contacts		Hand Crimping Tool		AMP-TAPETRONIC Stripper-Crimper	
			Pin	Socket	Pin	Socket	Tool	Positioner	Machine	Funnel
MIL-C-39029	**20-16** 0.5-1.4	**.103** 2.62	—	205117-2	204978-3	205117-1	M22520/1-01	M22520/1-02	599406-5	125905-6
Low Force, ARINC 600 connector contacts, suitable for use in ARINC 404 connectors (see page 4-19)										
Low Force ARINC 600*	**20-16** 0.5-1.4	**.103** 2.62	—	—	208268-3	208270-2	M22520/1-01	M22520/1-02	—	—

*Color coding, two bands: orange and blue.

Round Solder-Post Contact Solder Post Diameter .062 [15.75]

Material — Copper alloy, plated gold over nickel

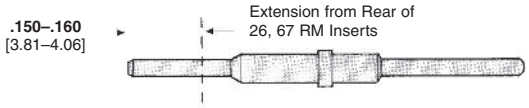

Round Solder-Post Pin
Part Number 205548-2 (Loose Piece)

Solder Cup Pin

Material — Copper alloy, plated gold over nickel

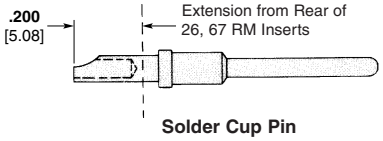

Solder Cup Pin
Part Number 206211-2

Insertion and Extraction Tool for all size 16 contacts: MS81969/1-03, Part Number 91066-3

Size 12 Contacts — Pin Diameter .094 [2.39]

Materials

Pin and Socket Body — Copper alloy, plated gold over nickel

Socket Sleeve — Passivated stainless steel

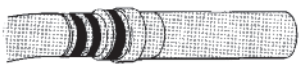

Socket

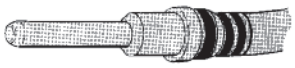

Pin

Contact Type	Wire Size AWG mm²	Insulation Diameter (Max.)	Part Numbers			
			Loose Piece Contacts		Hand Crimping Tool	
			Pin	Socket	Tool	Positioner
MIL-C-39029	**14-12** 2-3	**.190** 4.83	205763-5	205851-2	M22520/1-01	M22520/1-11
Low Force, ARINC 600 connector contacts, suitable for use in ARINC 404 connectors (see page 4-19)						
Low Force ARINC 600*	**14-12** 2-3	**.190** 4.83	208271-3	208273-2	M22520/1-01	M22520/1-11

*Color coding, two bands: orange and yellow.

Insertion and Extraction Tool for all size 12 contacts: Part Number 445147-1

Catalog 1308940
Revised 9-14

www.te.com

Dimensions are shown for reference purposes only. Specifications subject to change.

Dimensions are in millimeters unless otherwise specified.

USA: +1 800 522 6752
Asia Pacific: +86 0 400 820 6015
UK: +44 800 267 666

For additional support numbers please visit www.te.com

Application Tooling

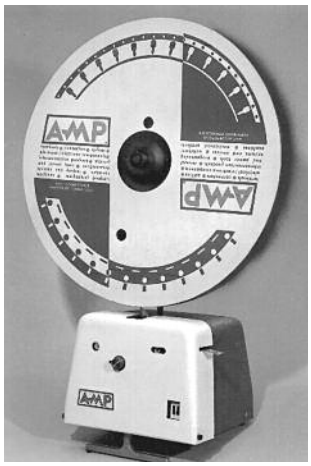

AMP-TAPEMATIC Stripper/Crimper Machine Part Number 599406-7

Portable bench machine that strips wire and crimps tape-mounted, closed-barrel pin and socket contacts for AMPLIMITE Military, ARINC and CPC connectors. The stripping and crimping heads are accessible through separate openings in the front of the machine. Wire strip length and crimp height are adjustable. The stripping head is pre-set to the proper cutting depth of four standard wire sizes.

Specifications

Width — 12.5 [317]
Depth — 12.5 [317]
Height — 10 [254] without reel
Weight — 45 lb [20 kg]
Electrical — 120 VAC, 60 Hz, 1.3 A
Wire Range — 28-20 AWG [0.08-0.5 mm^2]

Hand Crimping Tool (Tool Number 601966-1) Part Number M22520/2-01

This standard military-type hand tool terminates screw-machined pins and sockets to wire with an 8-indent, M22520/2 crimp. It is ideally suited for prototype, field maintenance and other applications where volume production is not a factor.

Application Tooling Instruction Sheet Cross Reference

Tool Number	Instruction Sheet
601966-1	408-7516
601967-1	408-7516
599406-7	408-7516

Insertion/Extraction Tools, ARINC 404

Tool Part Number	Product Line	Contact Size	Contact Type	Color Code	Style
91066-1	ARINC 404	22	Signal	Green	Rear Release/Rear Remove
91067-2	ARINC 404	20	Signal	Red	Rear Release/Rear Remove
91066-3	ARINC 404	16	Signal	Blue	Rear Release/Rear Remove
445147-1	ARINC 404	12	Signal	—	Rear Release/Rear Remove
91066-3	ARINC 404	15	Coax	Blue	Rear Release/Rear Remove
91074-1	ARINC 404	9	Coax	__	Rear Release/Rear Remove
N/A captivated	ARINC 404	7	Coax	—	Rear Release/Rear Remove
91074-1	ARINC 404	5	Coax	—	Rear Release/Rear Remove
N/A captivated	ARINC 404	3	Coax	—	Rear Release/Rear Remove
N/A captivated	ARINC 404	1	Coax	—	Rear Release/Rear Remove

Catalog 1308940
Revised 9-14

www.te.com

Dimensions are shown for reference purposes only. Specifications subject to change.

Dimensions are in millimeters unless otherwise specified.

USA: +1 800 522 6752
Asia Pacific: +86 0 400 820 6015
UK: +44 800 267 666

For additional support numbers please visit www.te.com

COAXICON Contacts

Size 1 Contacts

(For use in ARINC 404 and ARINC 600 Connectors)

Performance Characteristics

Nominal Impedance — 50 ohms

Frequency Range — 0 to 5 GHz

Operating Temperature — -85°F to 329°F [-65°C to +165°C]

Operating Voltage (Rated) — 1000 VAC rms, 60 Hz at Sea Level

Contact Resistance (Milliohms) — 1.0 max. — Center Contact
0.2 max. — Outer Contact

Insulation Resistance — 5,000 megohms min. @500 vdc per MIL-STD-1344, Method 3003 or MIL-STD-202, Method 302, Cond. B

Dielectric Withstanding Voltage (60 Hz, rms) —
RG 214/U
2500 at Sea Level
RG 142/U
1900 at Sea Level

VSWR — 1.35 to 1.00 at 5 GHz

Insertion/Withdrawal Force —
Insertion (max.) 15 lb [66.72 N]
Withdrawal (min.) 1 lb [4.45 N]

Cable Retention —
RG 214/U
125 lb [556 N] min.
RG 142/U
60 lb [266.9 N] min.

Thermal Shock — per MIL-STD-1344, Method 1003, Cond. A or MIL-STD-202, Method 107, Cond. A

Physical Shock — per MIL-STD-1344, Method 2004, Cond. D or MIL-STD-202, Method 213, Cond. D except 300 G max.

Vibration — per MIL-STD-1344, Method 2005, Cond. VI, Letter J or MIL-STD-202, Method 204, Cond. E except 42 G max.

Humidity Temperature Cycling — per MIL-STD-1344, Method 1002, Type II, Cond. A or MIL-STD-202, Method 106

Salt Spray — per MIL-STD-1344, Method 1001, Cond. B or MIL-STD-202, Method 101, Cond. B

Temperature Life — per MIL-STD-1344, Method 1005, Cond. D or MIL-STD-202, Method 108, Cond. D

Material and Finish

Contact — Beryllium Copper per ASTM-B-196/ASTM-B-197, Brass per ASTM-B-16, PTFE per ASTM-D-1710, Silicon Rubber per ZZ-R-765, Gold plate per MIL-G-45204, Nickel plate per QQ-N-290

Ferrule — Copper per ASTM-B-188, Tin plate per ASTM-B-545

Size 1 (Captivated)

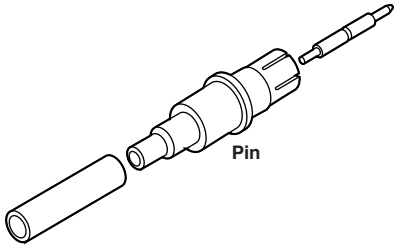

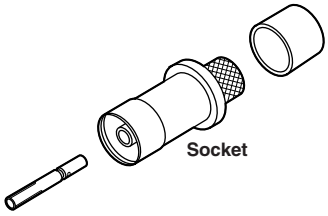

Contact Size	RG/U Cable	Contact Part No.		"O" Crimp Tooling			Compression Crimp Tooling		
				Center Contact					
		Pin	Socket	Tool (M22520/)	Positioner/ Die	Ferrule	Tool (M22520/)	Locator (M22520/)	Dies (M22520/)
1	402 Semi-Rigid **.141** [3.58]	225837-1	—	601966-1 (2-01)	1-601966-9	91905-1*	—	—	—
	402 Semi-Rigid **.141** [3.58]	222018-1	—	—	—	—	59980-1 (36-01)	220220-2 (36-06)	312253-1 (36-03)
	405 Semi-Rigid **.086** [2.18]	222018-2	—	—	—	—	59980-1 (36-01)	220220-2 (36-06)	312253-2 (36-02)
	214	—	225831-1	220015-1	—	220015-1	—	—	—
	142, 142A, 142B	—	225831-3	91902-1*	—	91902-1*	—	—	—
	393	—	225831-6	220015-1	—	220015-1	—	—	—

* SDE die used with tool frame 354940-1

Dimensions are shown for reference purposes only. Specifications subject to change.

Dimensions are in millimeters unless otherwise specified.

USA: +1 800 522 6752
Asia Pacific: +86 0 400 820 6015
UK: +44 800 267 666

For additional support numbers please visit www.te.com

COAXICON Contacts (Continued)

Size 3 Contacts
(For use in ARINC 404 Connectors)

Performance Characteristics

Nominal Impedance — 50 ohms

Frequency Range — 0 to 5 Ghz

Operating Temperature — -85°F to 329°F [-65°C to +165°C]

Operating Voltage (Rated) — 500 V rms, 60 Hz at Sea Level

Contact Resistance (Milliohms) — Center Contact — 2.1 max. Outer Contact — 0.2 max.

Insulation Resistance — 5,000 megohms min. @ 500 vdc per MIL-STD-1344, Method 3003 or MIL-STD-202, Method 302, Cond. B

Dielectric Withstanding Voltage (60 Hz, rms) — 1500 V rms at Sea Level

VSWR — 1.3 to 1.0 at 5 GHz

Material and Finish

Contact — Beryllium Copper per ASTM-B-196/ASTM-B-197, Brass per ASTM-B-16, PTFE per ASTM-D-1710, Silicon Rubber per ZZ-R-765, Gold plate per MIL-G-45204, Nickel plate per QQ-N-290, Tin plate per MIL-L-46064A

Ferrule — Copper per ASTM-B-188, Tin plate per ASTM-B-545

Size 3 (Captivated)

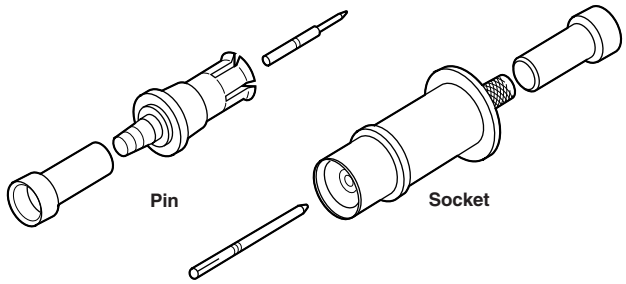

Contact Size	RG/U Cable	Contact Part No.		"O" Crimp Tooling		
				Center Contact		
		Pin	Socket	Tool (M22520/)	Positioner/ Die	Ferrule
3	58C	226053-1	225792-3	601966-1 (2-01)	2-601966-4[1] 1-601966-8[2]	91905-1*
	225	—	225792-5	220015-1	—	220015-1
	214	—	225792-1	220015-1	—	220015-1
3 (Right-Angle)	142, 142A, 142B	228011-1	—	601966-1 (2-01)	1-601966-8	91905-1*

[1] Use with pin contact
[2] Use with socket contact
* SDE die used with tool frame 354940-1

Size 5, 9 and 15 Contacts
(For use in ARINC 404 Connectors)

Performance Characteristics for size 5, 9 and 15 contacts

Nominal Impedance — 50 ohms

Frequency Range — 0 to 500 MHz

Operating Temperature — -85°F to 329°F [-65°C to +165°C]

Operating Voltage (Rated) — 325 VAC rms, 60 Hz

Contact Resistance (Milliohms) — Sizes 5 and 9 with RG 58/U cable:
Center Contact — 10
Outer Contact — 1.5
Size 15 with RG 316/U cable:
Center Contact — 15
Outer Contact — 2

Insulation Resistance — 5,000 megohms min. @ 500 vdc per MIL-STD-1344, Method 3003 or MIL-STD-202, Method 302, Cond. B

Dielectric Withstanding Voltage (60 Hz, rms) — Sizes 5 and 9 with RG 58/U and 316/U cable:
750 at Sea Level
350 at 50,000 ft [15 240 m]
Size 15 with RG 316/U, 178/U and 196/U cable:
325 at Sea Level
150 at 50,000 ft [15 240 m]

VSWR — 1.3 to 1.0 @ 500 MHz

Insertion/Withdrawal Force — Sizes 5 and 9:

Insertion Force Maximum		Withdrawal Force Minimum	
lb	[N]	lb	[N]
5	22.24	1	4.45

Size 15:

Insertion Force Maximum		Withdrawal Force Minimum	
oz	[N]	oz	[N]
35	6.95	5	1.39

Cable Retention — Sizes 5 and 9:
60 lb [266.9 N]
Size 15:
10 lb [44.5 N]

Durability — 500 cycles

Thermal Shock — per MIL-STD-1344, Method 1003, Cond. A or MIL-STD-202, Method 107, Cond. A

Physical Shock — per MIL-STD-1344, Method 2004, Cond. A or MIL-STD-202, Method 213, Cond. A

Vibration — per MIL-STD-1344, Method 2005, Cond. IV or MIL-STD-202, Method 204, Cond. D

Moisture Resistance — per MIL-STD-202, Method 106, omit steps 7a and 7b

Salt Spray — 48 hours per MIL-STD-1344, Method 1001, Cond. B or MIL-STD-202, Method 101, Cond. B

Material and Finish

Contact — Beryllium copper per ASTM-B-196/ASTM-B-197, Brass per ASTM-B-16, PTFE per ASTM-D-1710, Gold plate per MIL-G-45204, Nickel plate per QQ-N-290

Ferrule — Copper per ASTM-B-188, tin plate per ASTM-B-545

Size 5

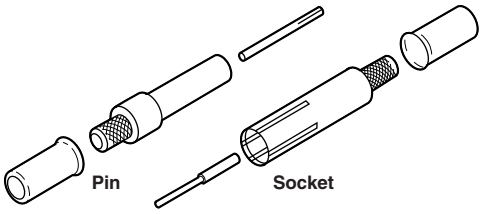

Size 9

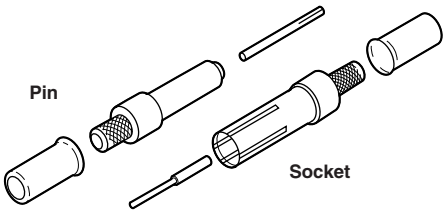

Size 15

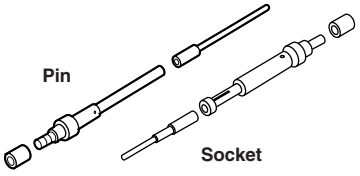

Catalog 1308940
Revised 9-14

www.te.com

Dimensions are shown for reference purposes only. Specifications subject to change.

Dimensions are in millimeters unless otherwise specified.

USA: +1 800 522 6752
Asia Pacific: +86 0 400 820 6015
UK: +44 800 267 666

For additional support numbers please visit www.te.com

COAXICON Contacts (Continued)

Size 5, 9 and 15 Contacts
(Continued)

Size 5

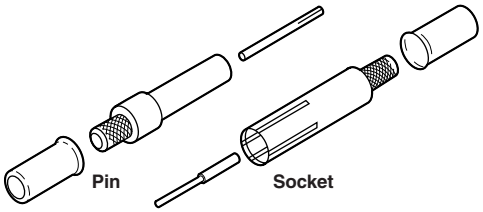

Size 9

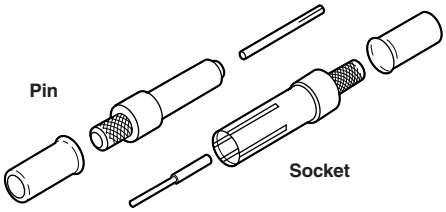

Size 15

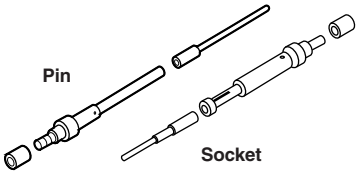

Contact Size	RG/U Cable	Contact Part No.		"O" Crimp Tooling			Military Hex Crimp Tooling			
				Center Contact			Center Contact		Ferrule	
		Pin	Socket	Tool (M22520/)	Positioner/ Die	Ferrule	Tool (M22520/)	Die (M22520/)	Tool (M22520/)	Die (M22520/)
5	58C	225790-1	225791-1	601966-1 (2-01)	1-601966-6 K345	91905-1**	—	—	—	—
	400, 142, 142A, 142B	225790-2	225791-2	220066-2	—	91905-1**	—	—	—	—
	141A	225790-1	225791-1	220066-2	—	91905-1**	—	—	—	—
	402 Semi-Rigid .141 [3.58]	225790-3	225791-6	220066-2	—	91905-1**	—	—	—	—
	174, 188, 316	225790-5	225791-3	601966-1 (2-01)	1-601966-6 K345	91905-1**	—	—	—	—
	180, 195	225790-4	225791-8	601966-1 (2-01)	1-601966-6 K345	91905-1**	—	—	—	—
	179, 187	225790-6 5-225790-6*	225791-4 5-225791-4*	601966-1 (2-01)	1-601966-6 K345	91905-1**	—	—	—	—
	178, 196	225790-7	225791-5	601966-1 (2-01)	1-601966-6 K345	220020-1	—	—	—	—
	223	225790-2	225791-2	601966-1 (2-01)	1-601966-6 K345	91905-1**	—	—	—	—
	316 Double Shield 188 Double Shield	225790-8	1-225791-0	—	—	—	601966-1 (2-01)	1-601966-6 K345	608650-1 (5-01)	(Y159)
Military Hex Crimp 5	316 Double Shield 188 Double Shield	225790-8 5-225790-8*	1-225791-0	—	—	—	601966-1 (2-01)	1-601966-6 K345	608650-1 (5-01)	(Y159)
	58C, 141A	447850-1	447851-1	—	—	—	601966-1 (2-01)	1-601966-6 K345	608650-1 (5-01)	(5-45B)
	142, 142A, 142B	447850-2	447851-2	—	—	—	601966-1 (2-01)	1-601966-6 K345	608650-1 (5-01)	(5-45B)
	402 Semi-Rigid .141 [3.58]	447850-3	447851-3	—	—	—	601966-1 (2-01)	1-601966-6 K345	608650-1 (5-01)	(5-45A)
	174, 188, 316	447850-4	447851-4	—	—	—	601966-1 (2-01)	1-601966-6 K345	608650-1 (5-01)	(5-37B)
9	58C 141A	225935-1	225936-2	601966-1 (2-01)	1-601966-6 K345	91905-1**	—	—	—	—
	174, 188 316	225935-4 5-225935-4*	225936-3 5-225936-3*	601966-1 (2-01)	1-601966-6 K345	91905-1**	—	—	—	—
	142A, 142B	225935-5	225936-5	601966-1 (2-01)	1-601966-6 K345	91905-1**	—	—	—	—
	316 Double Shield 188 Double Shield	225935-6	225936-9	—	—	—	601966-1 (2-01)	1-601966-6 K345	608650-1 (5-01)	(Y159)
	179, 187	225935-7	225936-7	601966-1 (2-01)	1-601966-6 K345	91905-1**	—	—	—	—
15	188, 316	226782-1	226781-1	601966-1 (2-01)	2-601966-6	601963-2 (4-01)	—	—	—	—
	179, 187	226782-2	226781-2 5-226781-2*	601966-1 (2-01)	2-601966-6	601963-2 (4-01)	—	—	—	—
	178, 196	226782-3 5-226782-3*	226781-3	601966-1 (2-01)	2-601966-6	601963-2 (4-01)	—	—	—	—

* RoHS compliant Part Numbers.
** SDE die used with tool frame 354940-1.

Extraction tools:
Size 5 and 9 —
Part Number 91074-1
Size 15 —
Part Number 91066-3

Dimensions are shown for reference purposes only. Specifications subject to change.

Dimensions are in millimeters unless otherwise specified.

USA: +1 800 522 6752
Asia Pacific: +86 0 400 820 6015
UK: +44 800 267 666

For additional support numbers please visit www.te.com

Plugs, Boots and Caps

Sealing Plugs

Size 22
Part Number 204760-1
White PTFE

Size 16
Part Number 203839-2
Blue thermoplastic

Size 20
Part Number 203839-1
Red thermoplastic

Size 12
Part Number 205574-1
Yellow thermoplastic

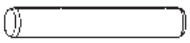

Coaxial Sealing Plug and Boot

Size 5
Plug—Part Number 205975-1

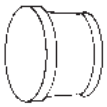

Boot for RG-58C cable—
Part Number 205402-2
Boot for RG-180, -190 cable—
Part Number 205402-3

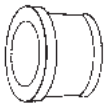

Dust Covers

Conductive Receptacle Cap
Part Number 445918-1
Conductive Plug Cap
Part Number 447162-1

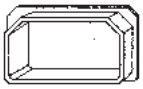

Plug Cap
Part Number 205282-1

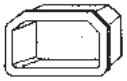

Receptacle Cap
Part Number 205283-1

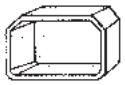

106-Contact Inserts for Flexible Flat Cable

These custom-made assemblies use TE Connectivity Flexible Flat Conductor Cable which has .050 [1.27] wide conductors, .003 [0.08] thick, on .100 [2.54] centers (or similar, customer-specified cable). The inserts mate with 106-contact inserts, shown on page 4-49, with size 22 contacts.

The adaptability of flexible flat cable to many uses, the wide variety of contact styles available, and the high quality of TE assembled harnesses make these inserts particularly attractive. Among their outstanding features are that they require no soldering, welding or potting, and the inserts are repairable by replacement of individual cables.

Flexible Flat Conductor Cable

- **Recognized under the Component Program of Underwriters Laboratories Inc., File No. E53793**

Consult TE for additional information.

Specifications

Temperature Rating — -67˚F to 221˚F [-55°C to +105°C]

Voltage Rating — 300 volts per UL Style No. 2646

Current Rating — 3 amperes, equivalent 27 AWG [0.1 mm²]

Insulation Resistance — 5000 megohms (min.)

Insulation Material — Polyester

Flammability — Self-extinguishing per applicable UL requirement

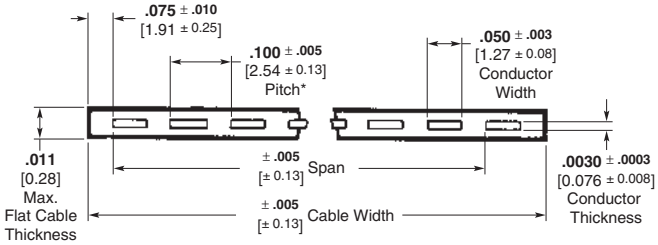

*Tolerance non-cumulative

Catalog 1308940
Revised 9-14

www.te.com

Dimensions are shown for reference purposes only. Specifications subject to change.

Dimensions are in millimeters unless otherwise specified.

USA: +1 800 522 6752
Asia Pacific: +86 0 400 820 6015
UK: +44 800 267 666

For additional support numbers please visit www.te.com

Flexible Flat Cable Applications

Design Options

Some of the many possible applications for flexible flat cable are illustrated here. Additionally, individual cables can be divided for termination with a mixture of various contact styles. For more information consult TE Connectivity.

- **A Receptacle contacts**
- **B Double row receptacle housing**
- **C .025 [0.64] square post, double-row, right-angle header**
- **D .025 [0.64] square post, double-row, right-angle header, shrouded**
- **E PC edge connector contacts**
- **F PC edge connector housing**
- **G Receptacle housing**
- **H .025 [0.64] square post, single-row, right-angle header, shrouded**
- **J .025 [0.64] square post, single-row, right-angle header**
- **K .025 [0.64] square post, single-row, straight header**
- **L .025 [0.64] square post, single-row, straight header, shrouded**
- **M Polarized SIP Socket**
- **N Solder tab housing**
- **P Solder tab contacts**

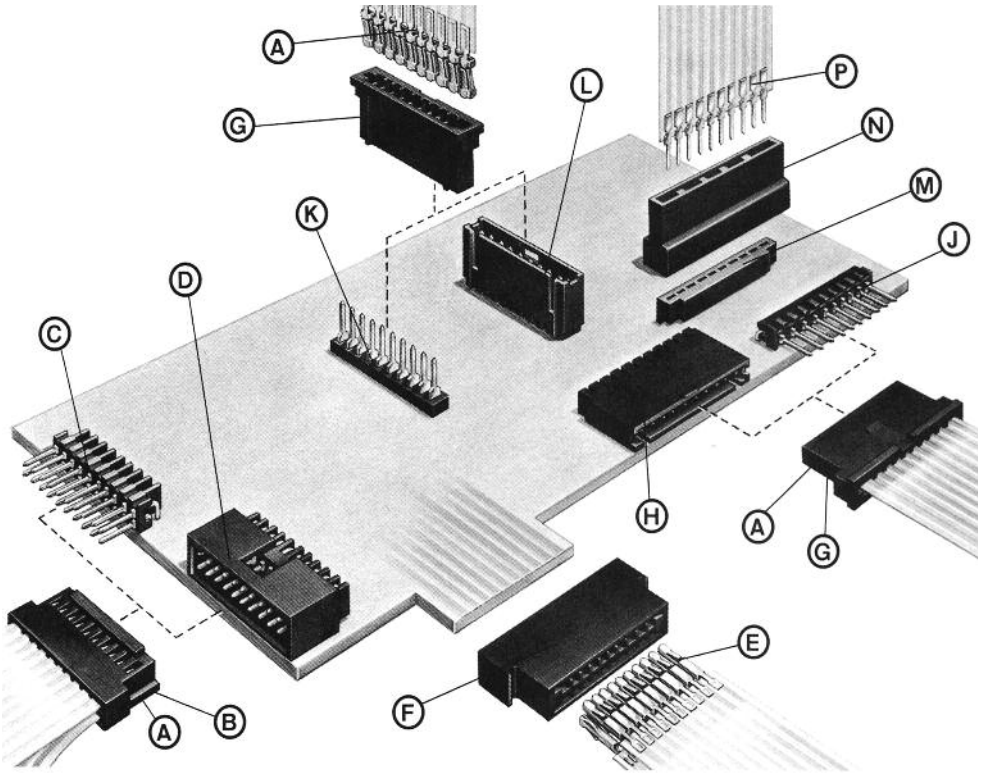

Multiple-Crimp Contacts

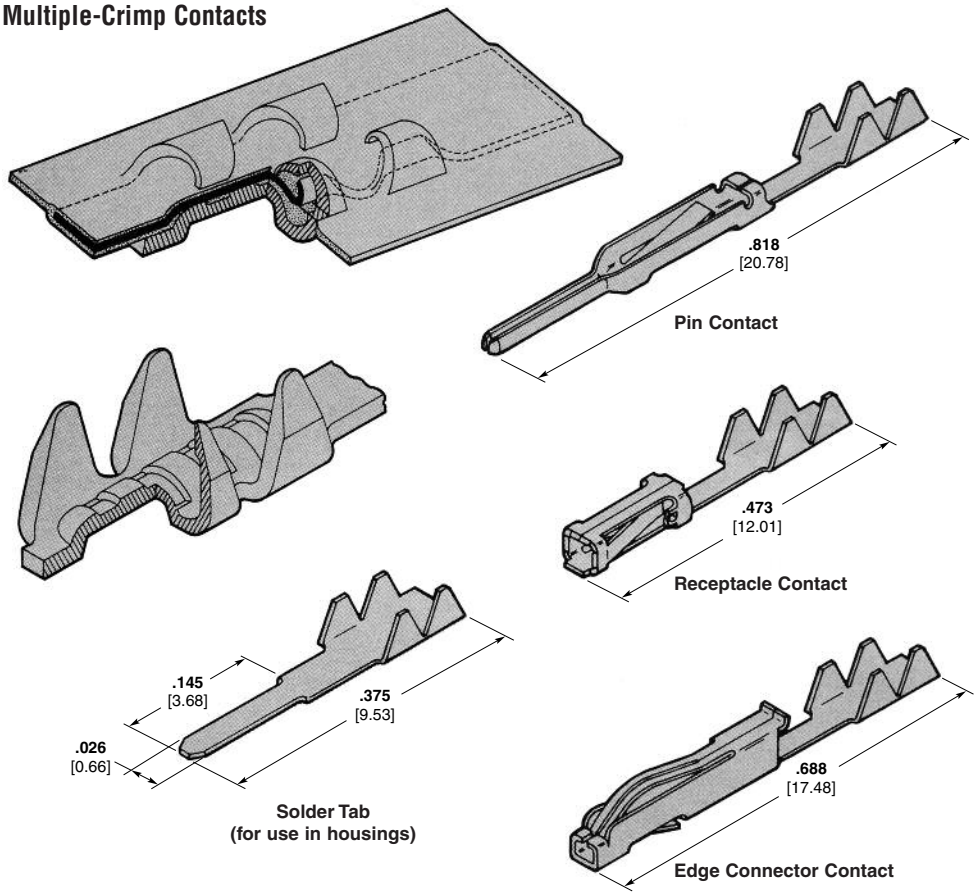

Catalog 1308940
Revised 9-14

www.te.com

Dimensions are shown for reference purposes only. Specifications subject to change.

Dimensions are in millimeters unless otherwise specified.

USA: +1 800 522 6752
Asia Pacific: +86 0 400 820 6015
UK: +44 800 267 666

For additional support numbers please visit www.te.com

Special Shells and Inserts

Miniature Connectors

Example: RA 1 P 32S 00 200

RA Series (unsealed)

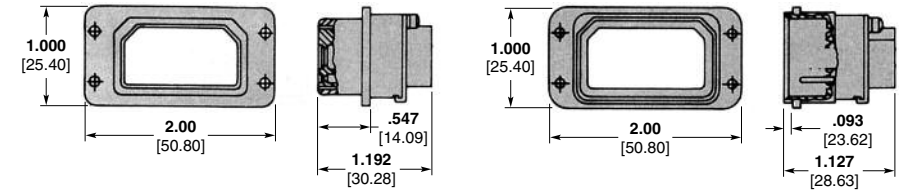

Plug (RA1P) Receptacle (RA1R)

RE Series (environmentally sealed)

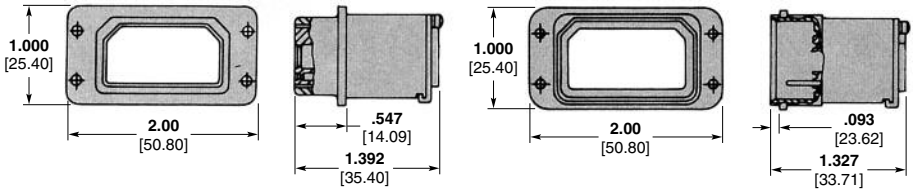

Plug (RE1P) Receptacle (RE1R)

Contact Inserts for Miniature Connectors

These inserts accept standard contacts shown on pages 4-53 and 4-54.

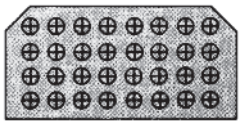

Arrangement 32
32 Size 20 Contacts

Standard Size, Unkeyed Connectors

RMA Series (unsealed)

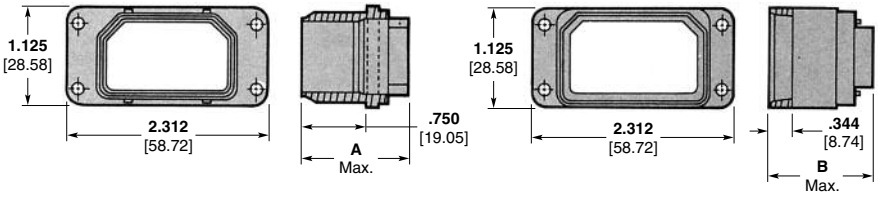

Plug Receptacle

RMAE Series (environmentally sealed)

These connectors use inserts shown on page 4-49. The shells are similar to standard series shells, except they are lighter weight and offer no keying provision.

Contact Arrangement	Dimensions			
	A Max. (Plug)		B Max. (Receptacle)	
	RMA	RMAE	RMA	RMAE
106	**1.120** 28.45	**1.320** 33.53	**1.250** 31.75	**1.450** 36.83
8, D8, 26, 40, 45, 57, 67	**1.220** 30.99	**1.420** 36.07	**1.350** 34.29	**1.550** 39.40
C8, 32C2, 32C4, 33C4, 40C1	**1.420** 36.07	**1.420** 36.07	**1.550** 39.37	**1.550** 39.37

Catalog 1308940
Revised 9-14

www.te.com

Dimensions are shown for reference purposes only. Specifications subject to change.

Dimensions are in millimeters unless otherwise specified.

USA: +1 800 522 6752
Asia Pacific: +86 0 400 820 6015
UK: +44 800 267 666

For additional support numbers please visit www.te.com

Cross Reference

Descriptive Part No.	Part No.	RoHS Part No.
M2P106P106P-2300(204)	0-1218229-1	—
M2R57P57P-0004(201)	0-1218368-1	—
M2RC8P106S-0104(200)	0-1218919-1	—
MM2R106S106S-0100(201)	0-1218476-1	—
MME1P106P-2301(204)	0-1484157-1	—
MME1P40S-0300(201)	0-1218230-1	—
MME1P57P-2301(204)	0-1218638-1	—
MME1R106S-0001(204)	0-1484158-1	—
MME1R57S-0001(204)	0-1218639-1	—
MME2P106PC8S-7101(201)	0-1218239-1	—
MME2P33C4S106P-29(204)	0-1218735-1	—
MME2P33C4SD8S-00(200)	0-1218720-1	—
MME2P57P57P-00(204)	0-1218814-1	5-1218814-1
MME2P57S57S-00(201)	0-1218706-1	5-1218706-1
MME2R33C4P106S-00(204)	0-1218745-1	—
MME2R33C4PD8P-00(200)	0-1218619-2	—
MME2R33C4PD8P-00(201)	0-1218619-1	5-1218619-1
MME2R40P40P-0001(204)	0-1218236-1	—
MME2R57S57S-00(200)	0-1484033-1	—
MME2R57S57S-00(201)	0-1484033-2	5-1484033-2
MME3R26P26P26P-1801(200)	0-1218155-1	—
R1P106S-2301(201)	0-0213431-1	—
R1P8S-0201(200)	0-1218133-1	—
R1R106P-0001(201)	0-0213432-1	—
R1R57P-0101(250)	0-1484148-1	—
R2P26S33C4S-0001(200)	0-1218637-1	5-1218637-1
R2P57S26S-0301(200)	0-1218361-1	—
R2P57S57S-0001(200)	0-0213433-1	—
R2P67S106P-3300(202)	2-0445564-0	—
R2P67S67S-0000(400)	0-1218101-1	—
R2R106S106S-0104(201)	0-0443098-1	—
R2R106S106S-2301(200)	0-0213434-6	—
R2R106S106S-2301(201)	0-0213434-7	—
R2R26P45P-0101(200)	0-0213434-1	—
R2R32C4P106S-0101(201)	0-1218404-1	—
R2R45P45P-0101(200)	0-0213434-2	—
R2R57P26P-0301(201)	0-1218205-1	—
R2R57P57P-0001(201)	0-1218146-1	—
R2R67P67P-0001(200)	0-0213434-3	—
R2R67P67P-0001(201)	0-0213434-4	—
R2R67P67P-0101(200)	0-0213434-5	5-0213434-5
RA1R32P-00(201)	0-1218080-1	—
RE1P32S-00(200)	0-1218176-1	—
RM1P106P-00(202)	0-1218314-1	—
RM1P26S-0001(200)	0-0213435-2	—
RM1P33C4S-0001(201)	0-0213435-3	—
RM1P33C4S-0001(200)	0-1218182-1	—
RM1P40C1P-0001(200)	0-0213435-5	—
RM1P40C1S-0001(200)	0-0213435-6	—
RM1P40S-0001(201)	0-0213435-4	—
RM1P40S-0001(200)	0-1218350-1	—
RM1P45S-00(200)	0-1218479-2	—
RM1P45S-0000(200)	0-1218479-1	5-1218479-1
RM1P57S-00(200)	0-0213435-7	—
RM1P57S-00(201)	0-0213435-8	—
RM1P57S-0001(200)	0-1218401-1	—
RM1P67S-00(200)	0-0213435-9	—
RM1P67S-0001(200)	0-1218042-1	—
RM1P67S-2366(200)	0-1218756-1	—

Descriptive Part No.	Part No.	RoHS Part No.
RM1P8S-0301(200)	0-1218237-1	—
RM1PD8P-0001(200)	0-0213435-1	5-0213435-1
RM1R106S-01(200)	0-1218724-1	—
RM1R32C4P-0101(200)	0-1218039-1	—
RM1R33C4P-0001(201)	0-0213436-2	—
RM1R33C4P-0101(200)	0-1218040-1	—
RM1R33C4P-0101(201)	0-1218040-2	—
RM1R40C1S-2301(200)	0-0213436-3	—
RM1R40P-0301(201)	0-1218363-1	—
RM1R67P-00(200)	0-0213436-4	—
RM1R67P-0101(200)	0-1218041-1	—
RM1R67P-0101(201)	0-1218041-2	—
RM1R67P-1848(200)*	0-1218656-1	—
RM1RD8S-0001(200)	0-0213436-1	5-0213436-1
RM2P106P106P-00(200)	0-0213437-9	—
RM2P106P106P-00(201)	1-0213437-0	—
RM2P106P106P-0000(201)	0-0445564-4	—
RM2P106P106P-00(202)	4-0445564-0	—
RM2P106P106P-0401(201)	1-0445564-4	—
RM2P106S106S-0201(200)	3-0445564-6	—
RM2P26PC8P-0001(200)	0-0213437-1	5-0213437-1
RM2P26S26S-0001(200)	0-0213437-2	5-0213437-2
RM2P26S26S-2301(201)	0-1218046-1	5-1218046-1
RM2P32C2P32C2P-0000(201)	0-0445564-0	—
RM2R32C2P40C1P-0001(200)	0-1218145-1	—
RM2P32C2S26S-0031(200)	0-1218876-1	5-1218876-1
RM2P33C4S33C4S-0001(200)	0-1218528-1	—
RM2P33C4S33C4S-0301(200)	0-0213437-4	—
RM2P33C4SC8S-0001(201)	0-0213437-3	—
RM2P33C4SD8S-0301(200)	0-1218228-1	—
RM2P40C1P40C1P-0000(201)	0-0445564-1	—
RM2P40S40S-02(206)	2-0445564-6	—
RM2P40S67S-0301(200)	0-1218226-1	—
RM2P45S45S-0001(200)	2-0445564-4	—
RM2P45S57S-00(200)	0-0206442-1	—
RM2P57P57P-0000(201)	0-0445564-2	—
RM2P57S57S-00(200)	0-0213437-5	—
RM2P67P67P-0000(201)	0-0445564-3	—
RM2P67S32C2S-0001(200)	0-0213437-6	5-0213437-6
RM2P67S32C2S-0001(201)	0-0213437-7	—
RM2P67S67S-00(202)	4-0445564-1	—
RM2P67S67S-0301(200)	0-0213437-8	—
RM1P67S67S-5001(200)	0-1218045-1	—
RM2PC8SC8S-0301(201)	1-0445564-7	—
RM2R106P106P-0001(201)	1-0213438-3	—
RM2R106S106S-00(200)	1-0213438-4	—
RM2R106S106S-00(202)	0-0446913-9	—
RM2R106S106S-0101(201)	0-1218934-1	—
RM2R106SD8P-0001(200)	1-0213438-2	—
RM2R26P26P-0001(200)	0-0213438-2	5-0213438-2
RM2R26SC8S-0001(200)	0-0213438-1	5-0213438-1
RM2R32C2P40C1P-0001(201)	0-0213438-3	—
RM2R33C4P33C4P-0101(200)	0-1218490-1	—
RM2R33C4P33C4P-2301(200)	0-0213438-6	—
RM2R33C4P57P-0101(400)	0-1218299-1	—
RM2R33C4S33C4S-0001(200)	0-0213438-5	—
RM2R33C4SC8S-0001(201)	0-0213438-4	—
RM2R40C1P67P-00(200)*	0-1218473-1	—
RM2R40P40P-0104(200)	0-1218342-1	—

*Assembly loaded with posted contacts

Catalog 1308940
Revised 9-14

www.te.com

Dimensions are shown for reference purposes only. Specifications subject to change.

Dimensions are in millimeters unless otherwise specified.

USA: +1 800 522 6752
Asia Pacific: +86 0 400 820 6015
UK: +44 800 267 666

For additional support numbers please visit www.te.com

Cross Reference (Continued)

Descriptive Part No.	Part No.	RoHS Part No.
RM2R40P67P-3301(200)	0-1218227-1	—
RM2R57P57P-0104(200)	0-1218348-1	—
RM2R67P26P-00(200)	0-0213438-7	—
RM2R67P32C2P-0001(200)	0-0213438-8	—
RM2R67P40C1P-0101(200)	0-0213438-9	—
RM2R67P57P-00(200)	1-0213438-0	—
RM2R67P67P-0000(200)	0-0446913-0	—
RM2R67P67P-00(202)	2-0445564-2	—
RM2R67P67P-0101(200)	1-0213438-1	—
RM2RC3P67P-0019(201)	0-1218206-1	—
RM2R67P32C2P-0101(200)	0-0448584-1	—
RM3P32C2S67S32C2S-0001(201)	0-1218349-1	—
RM3P40S32C2SC2S-0301(200)	0-1218224-1	—
RM3PC8S32C2S106P-0001(200)	0-0443969-1	—
RM3R40P32C2PC2P-3301(200)	0-1218225-1	—
RM2R40P40P-0104(200)	0-1218342-1	—
RM3RC8P32C2P106S-0001(200)*	0-0443970-1	—
RM4P106P106P106P88P-00(200)	0-0443174-1	—
RM4R88S106S106S106S-00(200)*	0-0443089-1	—
RMA1P26P-00(201)	0-1218202-1	—
RMA1P26S-00(201)	0-1218201-1	—
RMA1P45S-39(201)	0-1218959-1	—
RMA1P8S-39(201)	0-1218957-1	—
RMA1R26P00(201)	0-1218203-1	—
RMA1R45P-01(201)	0-1218960-1	—
RMA1R8P-01(201)	0-1218958-1	—
RME1P106P-0301(201)	0-1218354-1	—
RME1P33C4S-0001(200)	0-0213439-1	5-0213439-1
RME1P40C1S-01(250)	0-1484241-1	—
RME1P40C1S-01(251)	0-1484241-2	—
RME1P40S-0101(200)	0-1218352-1	—
RME1R106S-0201(201)	0-1218402-1	—
RME1R33C4P-0001(200)	0-0213440-2	—
RME1R40C1P-01(250)	0-1484240-1	—
RME1R40C1P-01(251)	0-1484240-2	—
RME1R40P-0001(200)	0-0213440-3	—
RME1R8P-0101(200)	0-0213440-1	—
RME2P106P106P-00(201)	0-0213441-6	—
RME2P106P106P-0001(200)	0-0213441-5	—

Descriptive Part No.	Part No.	RoHS Part No.
RME2P106P106P-0301(200)	0-0213441-7	—
RME2P106P106P-0399(254)	2-0445564-3	—
RME2P106P26P-0001(201)	1-0445564-3	—
RME2P106PD8S-5101(200)	2-0445564-1	—
RME2P106S106S-0001(200)	0-0213441-8	—
RME2P106S26P-0001(201)	1-0445564-5	—
RME2P106S26P-5001(201)	0-1218207-1	—
RME2P33C4S57S-0001(400)	0-1218300-1	—
RME2P40S40S-0015(200)	0-1218356-1	—
RME2P45S45S-0001(200)	0-0445564-5	—
RME2P45S8P-29 (204)	0-1218895-1	—
RME2P67S67S-0001(200)	0-0213441-2	5-0213441-2
RME2P67S67S-0101(200)	0-0213441-3	—
RME2P67S67S-0301(200)	0-0213441-4	—
RME2P67S67S-5001(200)	0-1218214-1	—
RME2P67SD8S-0001(200)	0-0213441-1	—
RME2P67SD8S-0001(201)	2-0445564-7	—
RME2P77C2P77C2P-0001(250)	0-0448235-1	—
RME2P8S77C2P-0001(250)	0-0448235-2	—
RME2PC8SC8S-0301(251)	0-0445564-6	—
RME2R106P106P-0001(201)	0-0446913-3	—
RME2R106P26S-2301(200)	0-0446913-1	—
RME2R106S106S-0001(200)	0-0446913-4	—
RME2R106S106S-2301(201)	0-0213442-5	—
RME2R106S33C4P-0001(201)	0-0213442-3	—
RME2R40P8P-0101(201)	0-0213442-1	—
RME2R45P8S-00(200)	0-1218894-1	—
RME2R67P26P-5002(200)	0-1484014-1	—
RME2R67P67P-3301(201)	0-1218343-1	5-1218343-1
RME2R67PD8P-0001(200)	0-0213442-2	—
RME2R77C2S77C2S-0001(250)	0-0448227-1	—
RME2R8P77C2S-0001(250)	0-0448227-2	—
RME2RC8S67S-00(200)	0-1218353-1	—
RME3P106P106P106S-0001(200)	0-1218297-1	—
RME3P57P26P26P-2600(201)	0-1218159-1	—
RME3P88S106S106S-0001(400)	0-1218358-1	—
RME3R57S26S26S-3300(201)	0-1218158-1	—
RME3R67P106S67P-7611(204)	0-1218723-1	—

*Assembly loaded with posted contacts

Catalog 1308940
Revised 9-14

www.te.com

Dimensions are shown for reference purposes only. Specifications subject to change.

Dimensions are in millimeters unless otherwise specified.

USA: +1 800 522 6752
Asia Pacific: +86 0 400 820 6015
UK: +44 800 267 666

For additional support numbers please visit www.te.com

Cross Reference

The commercial equivalent connectors listed include contacts in quantities as specified by MIL-C-81659. Military connectors may be ordered without contacts by placing the (201) custom ordering code (page 4-52) behind the TE Connectivity Descriptive Part Number. Connectors with keying installed may also be ordered by specifying it in the TE Descriptive Part Number (page 4-46).

REF MIL Designation	TE Commercial Equivalent	ITT Cannon Designation
MIL-C-81659/29A2-0001	MME1P26P-00	
MIL-C-81659/29A2-0002	MME1P26S-00	DPXBNE-26M-33S-00
MIL-C-81659/29A2-0009	MME1P40P-00	
MIL-C-81659/29A2-0010	MME1P40S-00	DPXBNE-40M-33S-00
MIL-C-81659/29A2-0017	MME1P45P-00	
MIL-C-81659/29A2-0018	MME1P45S-00	DPXBNE-45M-33S-00
MIL-C-81659/29A2-0025	MME1P57P-00	
MIL-C-81659/29A2-0026	MME1P57S-00	DPXBNE-57M-33S-00
MIL-C-81659/29A2-0033	MME1P67P-00	
MIL-C-81659/29A2-0034	MME1P67S-00	DPXBNE-67M-33S-00
MIL-C-81659/29A2-0041	MME1P106P-00	DPXBNE-A106-33P-00
MIL-C-81659/29A2-0042	MME1P106S-00	
MIL-C-81659/29A2-0083	MME1PD8P-00	
MIL-C-81659/29A2-0084	MME1PD8S-00	DPXBNE-D8M-33S-00
MIL-C-81659/31A2-0001	MME1R26P-00	DPXBNE-26M-34P-00
MIL-C-81659/31A2-0002	MME1R26S-00	
MIL-C-81659/31A2-0009	MME1R40P-00	DPXBNE-40M-34P-00
MIL-C-81659/31A2-0010	MME1R40S-00	
MIL-C-81659/31A2-0017	MME1R45P-00	DPXBNE-45M-34P-00
MIL-C-81659/31A2-0018	MME1R45S-00	
MIL-C-81659/31A2-0025	MME1R57P-00	DPXBNE-57M-34P-00
MIL-C-81659/31A2-0026	MME1R57S-00	
MIL-C-81659/31A2-0033	MME1R67P-00	DPXBNE-67M-34P-00
MIL-C-81659/31A2-0034	MME1R67S-00	
MIL-C-81659/31A2-0041	MME1R106P-00	
MIL-C-81659/31A2-0042	MME1R106S-00	DPXBNE-A106-34S-00
MIL-C-81659/31A2-0083	MME1RD8P-00	DPXBNE-D8M-34P-00
MIL-C-81659/31A2-0084	MME1RD8S-00	
MIL-C-81659/33A2-0003	MME2P26P26P-00	
MIL-C-81659/33A2-0004	MME2P26S26S-00	DPX2NE-26MS26MS-33B-00
MIL-C-81659/33A2-0011	MME2P40P40P-00	
MIL-C-81659/33A2-0012	MME2P40S40S-00	DPX2NE-40MD40MD-33B-00
MIL-C-81659/33A2-0019	MME2P45P45P-00	
MIL-C-81659/33A2-0020	MME2P45S45S-00	DPX2NE-45MS45MS-33B-00
MIL-C-81659/33A2-0027	MME2P57P57P-00	
MIL-C-81659/33A2-0028	MME2P57S57S-00	DPX2NE-57MS57MS-33B-00
MIL-C-81659/33A2-0035	MME2P67P67P-00	
MIL-C-81659/33A2-0036	MME2P67S67S-00	DPX2NE-67MS67MS-33B-00
MIL-C-81659/33A2-0043	MME2P106P106P-00	DPX2NE-A106PA106P-33B-00
MIL-C-81659/33A2-0044	MME2P106S106S-00	
MIL-C-81659/33A2-0057	MME2P106S26P-00	
MIL-C-81659/33A2-0058	MME2P106P26S-00	DPX2NE-A106P26MS-33B-00
MIL-C-81659/33A2-0059	MME2P26P106S-00	
MIL-C-81659/33A2-0060	MME2P26S106P-00	DPX2NE-26MSA106P-33B-00
MIL-C-81659/33A2-0071	MME2P67P106S-00	
MIL-C-81659/33A2-0072	MME2P67S106P-00	DPX2NE-67MSA106P-33B-00
MIL-C-81659/33A2-0089	MME2P106S67P-00	
MIL-C-81659/33A2-0090	MME2P106P67S-00	DPX2NE-A106P67MS-33B-00
MIL-C-81659/33A2-0133	MME2P57P106S-00	DPX2NE-57MSA106P-33B-00
MIL-C-81659/33A2-0134	MME2P57S106P-00	
MIL-C-81659/33A2-0147	MME2P57P26P-00	
MIL-C-81659/33A2-0148	MME2P57S26S-00	DPX2NE-57MS26MS
MIL-C-81659/35A2-0003	MME2R26P26P-00	DPX2NE-26MP26MP-34B-00
MIL-C-81659/35A2-0004	MME2R26S26S-00	
MIL-C-81659/35A2-0011	MME2R40P40P-00	DPX2NE-40MP40MP
MIL-C-81659/35A2-0012	MME2R40S40S-00	
MIL-C-81659/35A2-0019	MME2R45P45P-00	DPX2NE-45MP45MP
MIL-C-81659/35A2-0020	MME2R45S45S-00	
MIL-C-81659/35A2-0027	MME2R57P57P-00	DPX2NE-57MP57MP
MIL-C-81659/35A2-0028	MME2R57S57S-00	

MIL-C-81659/35A2 Continued on page 4-65

Cross Reference (Continued)

REF MIL Designation	TE Commercial Equivalent	ITT Cannon Designation
MIL-C-81659/35A2-0035	MME2R67P67P-00	DPX2NE-67MP67MP
MIL-C-81659/35A2-0036	MME2R67S67S-00	
MIL-C-81659/35A2-0043	MME2R106P106P-00	
MIL-C-81659/35A2-0044	MME2R106S106S-00	DPX2NE-A106SA106S
MIL-C-81659/35A2-0057	MME2R106S26P-00	DPX2NE-A106S26MP
MIL-C-81659/35A2-0058	MME2R106P26S-00	
MIL-C-81659/35A2-0059	MME2R26P106S-00	DPX2NE-26MPA106S
MIL-C-81659/35A2-0060	MME2R26S106P-00	
MIL-C-81659/35A2-0071	MME2R67P106S-00	DPX2NE-67MPA106S
MIL-C-81659/35A2-0072	MME2R67S106P-00	
MIL-C-81659/35A2-0089	MME2R106S67P-00	DPX2NE-A106S67MP
MIL-C-81659/35A2-0090	MME2R106P67S-00	
MIL-C-81659/35A2-0133	MME2R57P106S-00	DPX2NE-57MPA106S
MIL-C-81659/35A2-0134	MME2R57S106P-00	
MIL-C-81659/35A2-0147	MME2R57P26P-00	DPX2NE-57MP26MP
MIL-C-81659/35A2-0148	MME2R57S26S-00	
MIL-C-81659/37A2-0005	MME3P26P26P26P-00	
MIL-C-81659/37A2-0006	MME3P26S26S26S-00	DPX3NE-78M-33S-00
MIL-C-81659/37A2-0013	MME3P40P40P40P-00	DPX3NE-120M-33S-00
MIL-C-81659/37A2-0014	MME3P40S40S40S-00	
MIL-C-81659/37A2-0021	MME3P45P45P45P-00	
MIL-C-81659/37A2-0022	MME3P45S45S45S-00	DPX3NE-135M-33S-00
MIL-C-81659/37A2-0029	MME3P57P57P57P-00	DPX3NE-171M-33S-00
MIL-C-81659/37A2-0030	MME3P57S57S57S-00	
MIL-C-81659/37A2-0037	MME3P67P67P67P-00	
MIL-C-81659/37A2-0038	MME3P67S67S67S-00	DPX3NE-201M-33S-00
MIL-C-81659/37A2-0045	MME3P106P106P106P-00	DPX3NE-A318-33P-00
MIL-C-81659/37A2-0046	MME3P106S106S106S-00	
MIL-C-81659/37A2-0075	MME3P67P67P106S-00	
MIL-C-81659/37A2-0076	MME3P67S67S106P-00	DPX3NE-240M-33PS-00
MIL-C-81659/37A2-0079	MME3P67P106S67P-00	
MIL-C-81659/37A2-0080	MME3P67S106P67S-00	DPX3NE-A240M-33PS-00
MIL-C-81659/37A2-0091	MME3P106S106S67P-00	
MIL-C-81659/37A2-0092	MME3P106P106P67S-00	DPX3NE-279M-33PS-00
MIL-C-81659/39A2-0005	MME3R26P26P26P-00	DPX3NE-78M-34P-00
MIL-C-81659/39A2-0006	MME3R26S26S26S-00	
MIL-C-81659/39A2-0013	MME3R40P40P40P-00	DPX3NE-120M-34P-00
MIL-C-81659/39A2-0014	MME3R40S40S40S-00	
MIL-C-81659/39A2-0021	MME3R45P45P45P-00	DPX3NE-135M-34P-00
MIL-C-81659/39A2-0022	MME3R45S45S45S-00	
MIL-C-81659/39A2-0029	MME3R57P57P57P-00	DPX3NE-171M-34P-00
MIL-C-81659/39A2-0030	MME3R57S57S57S-00	
MIL-C-81659/39A2-0037	MME3R67P67P67P-00	DPX3NE-201M-34P-00
MIL-C-81659/39A2-0038	MME3R67S67S67S-00	
MIL-C-81659/39A2-0045	MME3R106P106P106P-00	
MIL-C-81659/39A2-0046	MME3R106S106S106S-00	DPX3NE-A318-34S-00
MIL-C-81659/39A2-0075	MME3R67P67P106S-00	DPX3NE-240M-34SP-00
MIL-C-81659/39A2-0076	MME3R67S67S106P-00	
MIL-C-81659/39A2-0079	MME3R67P106S67P-00	DPX3NE-A240M-34SP-00
MIL-C-81659/39A2-0080	MME3R67S106P67S-00	
MIL-C-81659/39A2-0091	MME3R106S106S67P-00	DPX3NE-279M-34SP-00
MIL-C-81659/39A2-0092	MME3R106P106P67S-00	
MIL-C-81659/41A2-0007	MME4P26P26P26P26P-00	
MIL-C-81659/41A2-0008	MME4P26S26S26S26S-00	DPX4NE-104M-33S-00
MIL-C-81659/41A2-0015	MME4P40P40P40P40P-00	
MIL-C-81659/41A2-0016	MME4P40S40S40S40S-00	DPX4NE-160M-33S-00
MIL-C-81659/41A2-0023	MME4P45P45P45P45P-00	
MIL-C-81659/41A2-0024	MME4P45S45S45S45S-00	DPX4NE-180M-33S-00
MIL-C-81659/41A2-0031	MME4P57P57P57P57P-00	
MIL-C-81659/41A2-0032	MME4P57S57S57S57S-00	DPX4NE-228M-33S-00

MIL-C-81659/41A2 Continued on page 4-66

Dimensions are shown for reference purposes only. Specifications subject to change.

Dimensions are in millimeters unless otherwise specified.

USA: +1 800 522 6752
Asia Pacific: +86 0 400 820 6015
UK: +44 800 267 666

For additional support numbers please visit www.te.com

Cross Reference (Continued)

REF MIL Designation	TE Commercial Equivalent	ITT Cannon Designation
MIL-C-81659/41A2-0039	MME4P67P67P67P67P-00	
MIL-C-81659/41A2-0040	MME4P67S67S67S67S-00	DPX4NE-268M-33S-00
MIL-C-81659/41A2-0047	MME4P106P106P106P106P-00	DPX4NE-A424-33S-00
MIL-C-81659/41A2-0048	MME4P106S106S106S106S-00	
MIL-C-81659/41A2-0061	MME4P26P26P26P26S-00	
MIL-C-81659/41A2-0062	MME4P26S26S26S26P-00	
MIL-C-81659/41A2-0101	MME4P106S106S67P67P-00	
MIL-C-81659/41A2-0102	MME4P106P106P67S67S-00	DPX4NE-346M-33PS-00
MIL-C-81659/43A2-0007	MME4R26P26P26P26P-00	DPX4NE-104M-34P-00
MIL-C-81659/43A2-0008	MME4R26S26S26S26S-00	
MIL-C-81659/43A2-0015	MME4R40P40P40P40P-00	DPX4NE-160M-34P-00
MIL-C-81659/43A2-0016	MME4R40S40S40S40S-00	
MIL-C-81659/43A2-0023	MME4R45P45P45P45P-00	DPX4NE-180M-34P-00
MIL-C-81659/43A2-0024	MME4R45S45S45S45S-00	
MIL-C-81659/43A2-0031	MME4R57P57P57P57P-00	DPX4NE-228M-34P-00
MIL-C-81659/43A2-0032	MME4R57S57S57S57S-00	
MIL-C-81659/43A2-0039	MME4R67P67P67P67P-00	DPX4NE-268M-34P-00
MIL-C-81659/43A2-0040	MME4R67S67S67S67S-00	
MIL-C-81659/43A2-0047	MME4R106P106P106P106P-00	
MIL-C-81659/43A2-0048	MME4R106S106S106S106S-00	DPX4NE-A42A-34P-00
MIL-C-81659/43A2-0061	MME4R26P26P26P26S-00	
MIL-C-81659/43A2-0062	MME4R26S26S26S26P-00	
MIL-C-81659/43A2-0101	MME4R106S106S67P67P-00	DPX4NE-346M-34SP-00
MIL-C-81659/43A2-0102	MME4R106P106P67S67S-00	
MIL-C-81659/61A2-0001	MM1R26P-00	DPXBNE-26M-34P-29
MIL-C-81659/61A2-0002	MM1R26S-00	
MIL-C-81659/61A2-0009	MM1R40P-00	DPXBNE-40M-34P-29
MIL-C-81659/61A2-0010	MM1R40S-00	
MIL-C-81659/61A2-0017	MM1R45P-00	DPXBNE-45M-34P-29
MIL-C-81659/61A2-0018	MM1R45S-00	
MIL-C-81659/61A2-0025	MM1R57P-00	DPXBNE-57M-34P-29
MIL-C-81659/61A2-0026	MM1R57S-00	
MIL-C-81659/61A2-0033	MM1R67P-00	DPXBNE-67M-34P-29
MIL-C-81659/61A2-0034	MM1R67S-00	
MIL-C-81659/61A2-0041	MM1R106P-00	
MIL-C-81659/61A2-0042	MM1R106S-00	DPXBNE-A106-34S-29
MIL-C-81659/61A2-0083	MM1RD8P-00	DPXBNE-D8M-34P-29
MIL-C-81659/61A2-0084	MM1RD8S-00	
MIL-C-81659/62A2-0003	MM2R26P26P-00	DPX2NE-26MP26MP-34B-29
MIL-C-81659/62A2-0004	MM2R26S26S-00	
MIL-C-81659/62A2-0011	MM2R40P40P-00	DPX2NE-40MP40MP-34B-29
MIL-C-81659/62A2-0012	MM2R40S40S-00	
MIL-C-81659/62A2-0019	MM2R45P45P-00	DPX2NE-45MP45MP-34B-29
MIL-C-81659/62A2-0020	MM2R45S45S-00	
MIL-C-81659/62A2-0027	MM2R57P57P-00	DPX2NE-57MP57MP-34B-29
MIL-C-81659/62A2-0028	MM2R57S57S-00	
MIL-C-81659/62A2-0035	MM2R67P67P-00	DPX2NE-67MP67MP-34B-29
MIL-C-81659/62A2-0036	MM2R67S67S-00	
MIL-C-81659/62A2-0043	MM2R106P106P-00	
MIL-C-81659/62A2-0044	MM2R106S106S-00	DPX2NE-A106SA106S-34B-29
MIL-C-81659/62A2-0057	MM2R106S26P-00	DPX2NE-A106S26MP-34B-29
MIL-C-81659/62A2-0058	MM2R106P26S-00	
MIL-C-81659/62A2-0059	MM2R26P106S-00	DPX2NE-26MPA106S-34B-29
MIL-C-81659/62A2-0060	MM2R26S106P-00	
MIL-C-81659/62A2-0071	MM2R67P106S-00	DPX2NE-67MPA106S-34B-29
MIL-C-81659/62A2-0072	MM2R67S106P-00	
MIL-C-81659/62A2-0089	MM2R106S67P-00	DPX2NE-A106S67MP-34B-29
MIL-C-81659/62A2-0090	MM2R106P67S-00	
MIL-C-81659/62A2-0133	MM2R57P106S-00	DPX2NE-57MPA106S-34B-29
MIL-C-81659/62A2-0134	MM2R57S106P-00	

MIL-C-81659/62A2 Continued on page 4-67

Dimensions are shown for reference purposes only. Specifications subject to change.

Dimensions are in millimeters unless otherwise specified.

USA: +1 800 522 6752
Asia Pacific: +86 0 400 820 6015
UK: +44 800 267 666

For additional support numbers please visit www.te.com

Cross Reference (Continued)

REF MIL Designation	TE Commercial Equivalent	ITT Cannon Designation
MIL-C-81659/62A2-0147	MM2R57P26P-00	DPX2NE-57MP26MP-34B-29
MIL-C-81659/62A2-0148	MM2R57S26S-00	
MIL-C-81659/63A2-0005	MM3R26P26P26P-00	DPX3NE-78M-34P-29
MIL-C-81659/63A2-0006	MM3R26S26S26S-00	
MIL-C-81659/63A2-0013	MM3R40P40P40P-00	DPX3NE-120M-34P-29
MIL-C-81659/63A2-0014	MM3R40S40S40S-00	
MIL-C-81659/63A2-0021	MM3R45P45P45P-00	DPX3NE-135M-34P-29
MIL-C-81659/63A2-0022	MM3R45S45S45S-00	
MIL-C-81659/63A2-0029	MM3R57P57P57P-00	DPX3NE-171M-34P-29
MIL-C-81659/63A2-0030	MM3R57S57S57S-00	
MIL-C-81659/63A2-0037	MM3R67P67P67P-00	DPX3NE-201M-34P-29
MIL-C-81659/63A2-0038	MM3R67S67S67S-00	
MIL-C-81659/63A2-0045	MM3R106P106P106P-00	
MIL-C-81659/63A2-0046	MM3R106S106S106S-00	DPX3NE-A318-34S-39
MIL-C-81659/63A2-0075	MM3R67P67P106S-00	DPX3NE-240M-34SP-29
MIL-C-81659/63A2-0076	MM3R67S67S106P-00	
MIL-C-81659/63A2-0079	MM3R67P106S67P-00	DPX3NE-A240M-34P-29
MIL-C-81659/63A2-0080	MM3R67S106P67S-00	
MIL-C-81659/63A2-0091	MM3R106S106S67P-00	DPX3NE-279M-34P-29
MIL-C-81659/63A2-0092	MM3R106P106P67S-00	
MIL-C-81659/64A2-0007	MM4R26P26P26P26P-00	DPX4NE-104M-34P-29
MIL-C-81659/64A2-0008	MM4R26S26S26S26S-00	
MIL-C-81659/64A2-0015	MM4R40P40P40P40P-00	DPX4NE-160M-34P-29
MIL-C-81659/64A2-0016	MM4R40S40S40S40S-00	
MIL-C-81659/64A2-0023	MM4R45P45P45P45P-00	DPX4NE-180M-34P-29
MIL-C-81659/64A2-0024	MM4R45S45S45S45S-00	
MIL-C-81659/64A2-0031	MM4R57P57P57P57P-00	DPX4NE-228M-34P-29
MIL-C-81659/64A2-0032	MM4R57S57S57S57S-00	
MIL-C-81659/64A2-0039	MM4R67P67P67P67P-00	DPX4NE-268M-34P-29
MIL-C-81659/64A2-0040	MM4R67S67S67S67S-00	
MIL-C-81659/64A2-0047	MM4R106P106P106P106P-00	
MIL-C-81659/64A2-0048	MM4R106S106S106S106S-00	DPX4NE-A424-34S-39
MIL-C-81659/64A2-0061	MM4R26P26P26P26S-00	
MIL-C-81659/64A2-0062	MM4R26S26S26S26P-00	
MIL-C-81659/64A2-0101	MM4R106S106S67P67P-00	DPX4NE-346M-34SP-29
MIL-C-81659/64A2-0102	MM4R106P106P67S67S-00	
MIL-C-81659/65A2-0001	M1P26P-00	
MIL-C-81659/65A2-0002	M1P26S-00	DPXBNA-26M-33S-00
MIL-C-81659/65A2-0009	M1P40P-00	
MIL-C-81659/65A2-0010	M1P40S-00	DPXBNA-49M-33S-00
MIL-C-81659/65A2-0017	M1P45P-00	
MIL-C-81659/65A2-0018	M1P45S-00	DPXBNA-45M-33S-00
MIL-C-81659/65A2-0025	M1P57P-00	
MIL-C-81659/65A2-0026	M1P57S-00	DPXBNA-57M-33S-00
MIL-C-81659/65A2-0033	M1P67P-00	
MIL-C-81659/65A2-0034	M1P67S-00	DPXBNA-67M-33S-00
MIL-C-81659/65A2-0041	M1P106P-00	DPXBNA-A106-33P-00
MIL-C-81659/65A2-0042	M1P106S-00	
MIL-C-81659/65A2-0083	M1PD8P-00	
MIL-C-81659/65A2-0084	M1PD8S-00	DPXBNA-D8M-33S-00
MIL-C-81659/66A2-0001	M1R26P-00	DPXBNA-26M-34P-00
MIL-C-81659/66A2-0002	M1R26S-00	
MIL-C-81659/66A2-0009	M1R40P-00	DPXBNA-40M-34P-00
MIL-C-81659/66A2-0010	M1R40S-00	
MIL-C-81659/66A2-0017	M1R45P-00	DPXBNA-45M-34P-00
MIL-C-81659/66A2-0018	M1R45S-00	
MIL-C-81659/66A2-0025	M1R57P-00	DPXBNA-57M-34P-00
MIL-C-81659/66A2-0026	M1R57S-00	
MIL-C-81659/66A2-0033	M1R67P-00	
MIL-C-81659/66A2-0034	M1R67S-00	

MIL-C-81659/66A2 Continued on page 4-68

Dimensions are shown for reference purposes only. Specifications subject to change.

Dimensions are in millimeters unless otherwise specified.

USA: +1 800 522 6752
Asia Pacific: +86 0 400 820 6015
UK: +44 800 267 666

For additional support numbers please visit www.te.com

Cross Reference (Continued)

REF MIL Designation	TE Commercial Equivalent	ITT Cannon Designation
MIL-C-81659/66A2-0041	M1R106P-00	
MIL-C-81659/66A2-0042	M1R106S-00	DPXBNA-A106-34S-00
MIL-C-81659/66A2-0083	M1RD8P-00	DPXBNA-D8M-34P-00
MIL-C-81659/66A2-0084	M1RD8S-00	
MIL-C-81659/67A2-0001	M1R26P-01	DPXBNA-26M-34P-01
MIL-C-81659/67A2-0002	M1R26S-01	
MIL-C-81659/67A2-0009	M1R40P-01	DPXBNA-40M-34P-01
MIL-C-81659/67A2-0010	M1R40S-01	
MIL-C-81659/67A2-0017	M1R45P-01	DPXBNA-45M-34P-01
MIL-C-81659/67A2-0018	M1R45S-01	
MIL-C-81659/67A2-0025	M1R57P-01	DPXBNA-57M-34P-01
MIL-C-81659/67A2-0026	M1R57S-01	
MIL-C-81659/67A2-0033	M1R67P-01	DPXBNA-67M-34P-01
MIL-C-81659/67A2-0034	M1R67S-01	
MIL-C-81659/67A2-0041	M1R106P-01	
MIL-C-81659/67A2-0042	M1R106S-01	DPXBNA-A106-34S-01
MIL-C-81659/67A2-0083	M1RD8P-01	DPXBNA-D8M-34P-01
MIL-C-81659/67A2-0084	M1RD8S-01	
MIL-C-81659/68A2-0001	M1R26P-23	DPXBNA-26M-34P-23
MIL-C-81659/68A2-0002	M1R26S-23	
MIL-C-81659/68A2-0009	M1R40P-23	DPXBNA-40M-34P-23
MIL-C-81659/68A2-0010	M1R40S-23	
MIL-C-81659/68A2-0017	M1R45P-23	DPXBNA-45M-34P-23
MIL-C-81659/68A2-0018	M1R45S-23	
MIL-C-81659/68A2-0025	M1R57P-23	DPXBNA-57M-34P-23
MIL-C-81659/68A2-0026	M1R57S-23	
MIL-C-81659/68A2-0033	M1R67P-23	DPXBNA-67M-34P-23
MIL-C-81659/68A2-0034	M1R67S-23	
MIL-C-81659/68A2-0041	M1R106P-23	
MIL-C-81659/68A2-0042	M1R106S-23	DPXBNA-A106-34S-23
MIL-C-81659/68A2-0083	M1RD8P-23	DPXBNA-D8M-34P-23
MIL-C-81659/68A2-0084	M1RD8S-23	
MIL-C-81659/69A2-0003	M2P26P26P-00	
MIL-C-81659/69A2-0004	M2P26S26S-00	DPX2NA-26MS26MS-33B-00
MIL-C-81659/69A2-0011	M2P40P40P-00	
MIL-C-81659/69A2-0012	M2P40S40S-00	DPX2NA-40MS40MS-33B-00
MIL-C-81659/69A2-0019	M2P45P45P-00	
MIL-C-81659/69A2-0020	M2P45S45S-00	DPX2NA-45MS45MS-33B-00
MIL-C-81659/69A2-0027	M2P57P57P-00	
MIL-C-81659/69A2-0028	M2P57S57S-00	DPX2NA-57MS57MS-33B-00
MIL-C-81659/69A2-0035	M2P67P67P-00	
MIL-C-81659/69A2-0036	M2P67S67S-00	DPX2NA-67MS67MS-33B-00
MIL-C-81659/69A2-0043	M2P106P106P-00	DPX2NA-A106PA106P-33B-00
MIL-C-81659/69A2-0044	M2P106S106S-00	
MIL-C-81659/69A2-0057	M2P106S26P-00	
MIL-C-81659/69A2-0058	M2P106P26S-00	DPX2NA-A106P26MS-33B-00
MIL-C-81659/69A2-0059	M2P26P106S-00	
MIL-C-81659/69A2-0060	M2P26S106P-00	DPX2NA-26MSA106P-33B-00
MIL-C-81659/69A2-0071	M2P67P106S-00	
MIL-C-81659/69A2-0072	M2P67S106P-00	DPX2NA-67MSA106P-33B-00
MIL-C-81659/69A2-0089	M2P106S67P-00	
MIL-C-81659/69A2-0090	M2P106P67S-00	DPX2NA-A106P67MS-33B-00
MIL-C-81659/69A2-0133	M2P57P106S-00	
MIL-C-81659/69A2-0134	M2P57S106P-00	DPX2NA-57MSA106P-33B-00
MIL-C-81659/69A2-0147	M2P57P26P-00	
MIL-C-81659/69A2-0148	M2P57S26S-00	DPX2NA-57MS26MS-33B-00
MIL-C-81659/70A2-0003	M2R26P26P-00	DPX2NA-26MP26MP-34B-00
MIL-C-81659/70A2-0004	M2R26S26S-00	
MIL-C-81659/70A2-0011	M2R40P40P-00	DPX2NA-40MP40MP-34B-00
MIL-C-81659/70A2-0012	M2R40S40S-00	

MIL-C-81659/70A2 Continued on page 4-69

Dimensions are shown for reference purposes only. Specifications subject to change.

Dimensions are in millimeters unless otherwise specified.

USA: +1 800 522 6752
Asia Pacific: +86 0 400 820 6015
UK: +44 800 267 666

For additional support numbers please visit www.te.com

Cross Reference (Continued)

REF MIL Designation	TE Commercial Equivalent	ITT Cannon Designation
MIL-C-81659/70A2-0019	M2R45P45P-00	DPX2NA-45MP45MP-34B-00
MIL-C-81659/70A2-0020	M2R45S45S-00	
MIL-C-81659/70A2-0027	M2R57P57P-00	DPX2NA-57MP57MP-34B-00
MIL-C-81659/70A2-0028	M2R57S57S-00	
MIL-C-81659/70A2-0035	M2R67P67P-00	DPX2NA-67MP67MP-34B-00
MIL-C-81659/70A2-0036	M2R67S67S-00	
MIL-C-81659/70A2-0043	M2R106P106P-00	
MIL-C-81659/70A2-0044	M2R106S106S-00	DPX2NA-A106SA106S-34B-00
MIL-C-81659/70A2-0057	M2R106S26P-00	DPX2NA-A106S26MP-34B-00
MIL-C-81659/70A2-0058	M2R106P26S-00	
MIL-C-81659/70A2-0059	M2R26P106S-00	DPX2NA-26MPA106S-34B-00
MIL-C-81659/70A2-0060	M2R26S106P-00	
MIL-C-81659/70A2-0071	M2R67P106S-00	DPX2NA-67MPA106S-34B-00
MIL-C-81659/70A2-0072	M2R67S106P-00	
MIL-C-81659/70A2-0089	M2R106S67P-00	DPX2NA-A106S67MP-34B-00
MIL-C-81659/70A2-0090	M2R106P67S-00	
MIL-C-81659/70A2-0133	M2R57P106S-00	DPX2NA-57MPA106A-34B-00
MIL-C-81659/70A2-0134	M2R57S106P-00	
MIL-C-81659/70A2-0147	M2R57P26P-00	DPX2NA-57MP26MP-34B-00
MIL-C-81659/70A2-0148	M2R57S26S-00	
MIL-C-81659/71A2-0003	M2R26P26P-01	DPX2NA-26MP26MP-34B-01
MIL-C-81659/71A2-0004	M2R26S26S-01	
MIL-C-81659/71A2-0011	M2R40P40P-01	DPX2NA-40MP40MP-34B-01
MIL-C-81659/71A2-0012	M2R40S40S-01	
MIL-C-81659/71A2-0019	M2R45P45P-01	DPX2NA-45MP45MP-34B-01
MIL-C-81659/71A2-0020	M2R45S45S-01	
MIL-C-81659/71A2-0027	M2R57P57P-01	DPX2NA-57MP57MP-34B-01
MIL-C-81659/71A2-0028	M2R57S57S-01	
MIL-C-81659/71A2-0035	M2R67P67P-01	DPX2NA-67MP67MP-34B-01
MIL-C-81659/71A2-0036	M2R67S67S-01	
MIL-C-81659/71A2-0043	M2R106P106P-01	
MIL-C-81659/71A2-0044	M2R106S106S-01	DPX2NA-A106SA106A-34B-01
MIL-C-81659/71A2-0057	M2R106S26P-01	DPX2NA-A106S26MP-34B-01
MIL-C-81659/71A2-0058	M2R106P26S-01	
MIL-C-81659/71A2-0059	M2R26P106S-01	DPX2NA-26MPA106S-34B-01
MIL-C-81659/71A2-0060	M2R26S106P-01	
MIL-C-81659/71A2-0071	M2R67P106S-01	DPX2NA-67MPA106S-34B-01
MIL-C-81659/71A2-0072	M2R67S106P-01	
MIL-C-81659/71A2-0089	M2R106S67P-01	DPX2NA-A106S67MP-34B-01
MIL-C-81659/71A2-0090	M2R106P67S-01	
MIL-C-81659/71A2-0133	M2R57P106S-01	DPX2NA-57MPA106A-34B-01
MIL-C-81659/71A2-0134	M2R57S106P-01	
MIL-C-81659/71A2-0147	M2R57P26P-01	DPX2NA-57MP26MP-34B-01
MIL-C-81659/71A2-0148	M2R57S26S-01	
MIL-C-81659/72A2-0003	M2R26P26P-23	DPX2NA-26MP26MP-34B-23
MIL-C-81659/72A2-0004	M2R26S26S-23	
MIL-C-81659/72A2-0011	M2R40P40P-23	DPX2NA-40MP40MP-34B-23
MIL-C-81659/72A2-0012	M2R40S40S-23	
MIL-C-81659/72A2-0019	M2R45P45P-23	DPX2NA-45MP45MP-34B-23
MIL-C-81659/72A2-0020	M2R45S45S-23	
MIL-C-81659/72A2-0027	M2R57P57P-23	DPX2NA-57MP57MP-34B-23
MIL-C-81659/72A2-0028	M2R57S57S-23	
MIL-C-81659/72A2-0035	M2R67P67P-23	DPX2NA-67MP67MP-34B-23
MIL-C-81659/72A2-0036	M2R67S67S-23	
MIL-C-81659/72A2-0043	M2R106P106P-23	
MIL-C-81659/72A2-0044	M2R106S106S-23	DPX2NA-A106SA106S-34B-23
MIL-C-81659/72A2-0057	M2R106S26P-23	DPX2NA-A106S26MP-34B-23
MIL-C-81659/72A2-0058	M2R106P26S-23	
MIL-C-81659/72A2-0059	M2R26P106S-23	DPX2NA-26MPA106S-34B-23
MIL-C-81659/72A2-0060	M2R26S106P-23	

MIL-C-81659/72A2 Continued on page 4-70

Dimensions are shown for reference purposes only. Specifications subject to change.

Dimensions are in millimeters unless otherwise specified.

USA: +1 800 522 6752
Asia Pacific: +86 0 400 820 6015
UK: +44 800 267 666

For additional support numbers please visit www.te.com

Cross Reference (Continued)

REF MIL Designation	TE Commercial Equivalent	ITT Cannon Designation
MIL-C-81659/72A2-0071	M2R67P106S-23	DPX2NA-67MPA106S-34B-23
MIL-C-81659/72A2-0072	M2R67S106P-23	
MIL-C-81659/72A2-0089	M2R106S67P-23	DPX2NA-A106S67MP-34B-23
MIL-C-81659/72A2-0090	M2R106P67S-23	
MIL-C-81659/72A2-0133	M2R57P106S-23	DPX2NA-57MPA106A-34B-23
MIL-C-81659/72A2-0134	M2R57S106P-23	
MIL-C-81659/72A2-0147	M2R57P26P-23	DPX2NA-57MP26MP-34B-23
MIL-C-81659/72A2-0148	M2R57S26S-23	

Dimensions are shown for reference purposes only. Specifications subject to change.

Dimensions are in millimeters unless otherwise specified.

USA: +1 800 522 6752
Asia Pacific: +86 0 400 820 6015
UK: +44 800 267 666

For additional support numbers please visit www.te.com

Introduction

Product Facts

- **Superior EMC/EMI Shielding Performance**
- **Simple installation**
- **Easy reentry**
- **Simplified maintenance and repair**
- **Excellent mechanical and environmental resistance**
- **Efficient strain relief**
- **Flexibility**
- **Versatility**

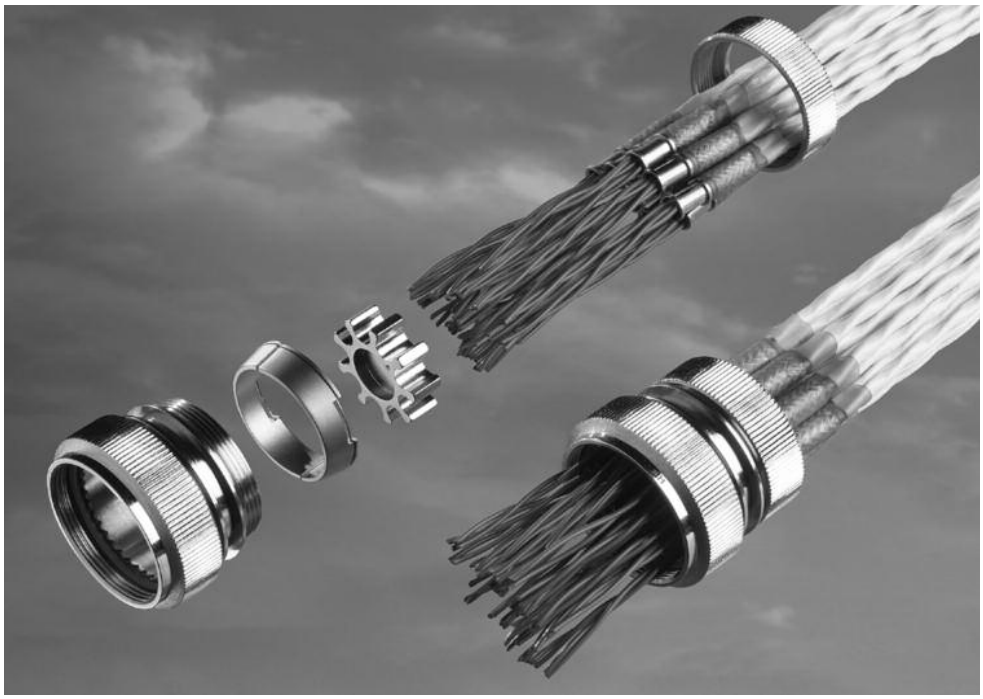

Applications

TE Connectivity, a longtime leader in harnessing technology, has written a new chapter in EMC shielding with the introduction of the Raychem HexaShield EMC adapter.

Designed to provide EMC protection solutions for both commercial and military applications, HexaShield adapters represent a significant improvement over pigtail termination methods. By providing 360-degree EMC shielding on the termination area of each individual cable, HexaShield adapters provide outstanding shielding effectiveness.

HexaShield adapters are simple to install, easy to maintain, and dependably resistant to mechanical and environmental stresses.

Principal points and features

- Easy reentry: To insert or remove ferrules from the HexaShield adapter, simply loosen the back nut.
- Superior protection: No degradation of shielding performance.
- Up to four shielded cables accommodated by each ferrule.
- Mechanical and environmental protection equal to backshells complying with MIL-C-85049 Category 3B.
- Strain relief on each individual cable.
- Weight reduction, by possibly eliminating the need for overall shielding.
- Compact size — not exceeding outer diameter of connector.
- Available in straight, 45° and 90° angles, as well as swept and long bodies.

Simple assembly and installation

1. Solder cable or wire shield to a ferrule with a Raychem heat-shrinkable SolderShield terminator.
2. Clip ferrule into one of the grounding star cavities.
3. Secure the back nut of the HexaShield adapter so that the conic ring assembly automatically compresses the ferrules.

Designed to corresponding connector specifications

Two Platings Available	Raychem Product Specifications
Electroless nickel (MIL-DTL-26074)	RB-110 and RB-114
Olive drab cadmium (QQ-P-416 Type II Class 3)	—

*Contact TE for additional platings.

Installation Procedures

Installation procedure for HET-A-02X and HET-A-04X (RPIP-696-00)	Installation procedure for HET-03X (RPIP-696-03)	General procedure for cylindrical connectors, right-angle body (RPIP-696-07)
General procedure for ARINC 600 Size II connectors (RPIP-696-01)	General procedure for cylindrical connectors, straight body (RPIP-696-04)	—
General procedure for ARINC 600 Size III connectors (RPIP-696-02)	—	—

Catalog 1308940
Revised 9-14

www.te.com

Dimensions are shown for reference purposes only. Specifications subject to change.

Dimensions are in millimeters unless otherwise specified.

USA: +1 800 522 6752
Asia Pacific: +86 0 400 820 6015
UK: +44 800 267 666

For additional support numbers please visit www.te.com

Kit Descriptions

Hexashield Adapters for Circular Connectors: Straight, 45°and 90° Assemblies

Item	Description
1	Straight adapter assembly
2	Conic ring assembly
3	Star Plain (Standard) Drilled (Option) Split (Option)
4	Straight adapter assembly - “L” version — nominally 0.5" [12.7] longer body
5	45° adapter assembly — welded
6	45° adapter assembly — swept
7	90° adapter assembly — welded
8	90° adapter assembly — swept Standard products shown. Variants available on request. Split star assemblies are shown on relevant S.C.D’s where applicable.

Item	HexaShield Version
-1	Back Nut
-2	Tinel adapter assembly Tinel-Lock ring for single braid
-3	Bandstrap adapter assembly
-C	Conduit adapter

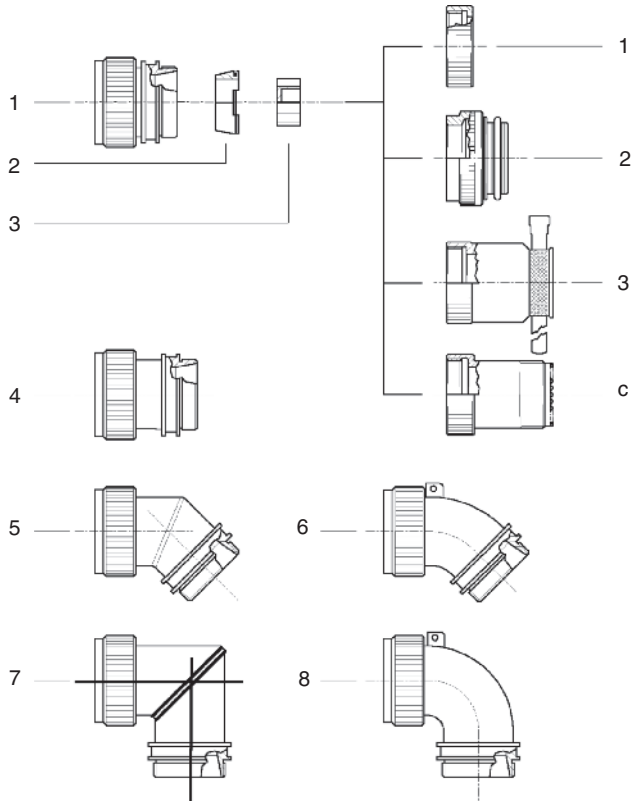

HexaShield Adapters for ARINC 404/600 Connectors: Sizes 1, 2, 3 and 4 Assemblies

Item	Description
1	Left side support
2	Right side support
3	Retention bars
4	Body assemblies Body Holding nut Conic ring assembly Star Back nut
5	Cavity plug assemblies Plug Holding nut
6	Pan head screws — 4-40 UNC
7	Spring washers

ARINC 600 Size 2 shown
Stars are available as plain, drilled or split.
See relevant S.C.D’s for further information

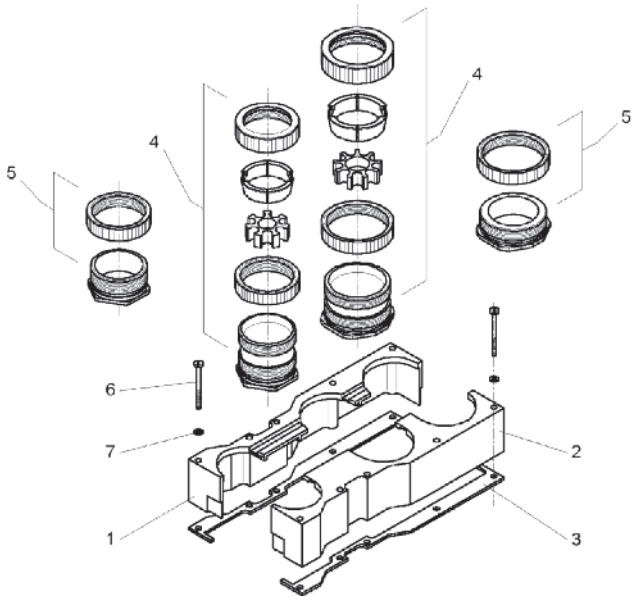

Catalog 1308940
Revised 9-14

www.te.com

Dimensions are shown for reference purposes only. Specifications subject to change.

Dimensions are in millimeters unless otherwise specified.

USA: +1 800 522 6752
Asia Pacific: +86 0 400 820 6015
UK: +44 800 267 666

For additional support numbers please visit www.te.com

Ordering Information

Part Numbering for Standard Products

HexaShield Adapter for Circular Connectors

HEXYY L -AY -00 S -YY -AY -Y -DS

Drilled Star:
See applicable SCD for star options

Type of Back Nut:
1 = Standard back nut
2 = Clamping nut for tinel ring (for overbraid protection)
3 = Clamping nut with bandstrap
C = Clamping nut for conduit applicator

Max. number of ferrules that can be accommodated
See applicable SCD for options

HexaShield Size Code:
See applicable SCD for order number (shell size)

S = Swept version

Configuration:
00 = Straight body
45 = 45 degree angle body
90 = 90 degree angle body

Type of Plating:
B = Cadmium plated
C = Electroless nickel

L = Long body
See applicable SCD for availability

Connector Code Number:
21 = MIL-C-26482 Series 1
40 = MIL-DTL-38999 Series 3 and 4
41 = MIL-DTL-38999 Series 1 and 2
54 = MIL-DTL-38723 Series 1 and 3
MIL-C-25482 Series 2

Catalog 1308940
Revised 9-14

www.te.com

Dimensions are shown for reference purposes only. Specifications subject to change.

Dimensions are in millimeters unless otherwise specified.

USA: +1 800 522 6752
Asia Pacific: +86 0 400 820 6015
UK: +44 800 267 666

For additional support numbers please visit www.te.com

Ordering Information (Continued)

HexaShield Adapter for Collins Connectors

HEXDB-AC-00-A9-1

00 = Straight body
90 = Right-angle body

HexaShield Adapter for ARINC 600 Connectors

HEXA6-AY-00-YY-AY-Y

Clamping nut version:
1 = Clamping nut alone
2 = Clamping nut for tinel ring

Number of ferrules:
18 for ARINC 600 size II (A and B cavities)
25 for ARINC 600 size II (A, B and C cavities)
18 for ARINC 600 size III (A and B cavities)
See applicable SCD for options

ARINC Connector Size:
02 = ARINC 600 size II
03 = ARINC 600 size III

Configuration:
00 = Straight body
90 = Right-angle body

Plating:
B = Cadmium plated
C = Electroless nickel

Drilled Stars are standard on ARINC 600 adapters.

Part Numbering of Ferrule Kits*

HET-A-02X for small-size cable with SolderShield terminator
HET-A-03X for connection of unshielded cables
ferrules with heat-shrinkable tubing (no shield)
HET-A-04X for large-size cables with SolderShield terminator

Type of Plating:
B = Cadmium plated
C = Electroless nickel

HEX07-AX ferrule — solid blank for use when a HET-A is not needed

Type of Plating:
B = Cadmium plated
C = Electroless nickel

*Not all part numbers are standard; your local TE Connectivity representative will assist you in selecting the appropriate standard product

Dimensions are shown for reference purposes only. Specifications subject to change.

Dimensions are in millimeters unless otherwise specified.

USA: +1 800 522 6752
Asia Pacific: +86 0 400 820 6015
UK: +44 800 267 666

For additional support numbers please visit www.te.com

EMC Performance

Product Facts

- **Outperforms traditional pigtail termination, especially in HIRF performance**
- **Withstands 10-kA peak current lightning transients of SAE AE4L-87-3**

Transfer Impedance

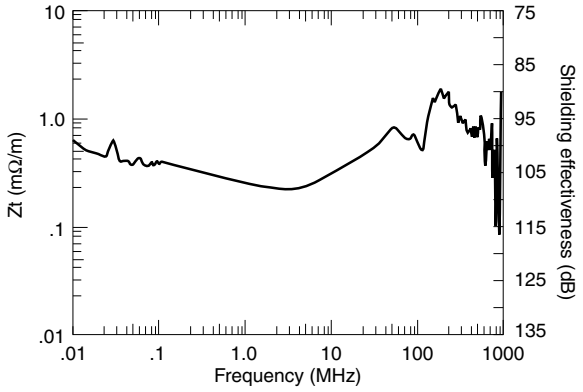

HexaShield size: 23

Cable: Raychem 5024H8424 (one cable installed)

Test method: CEI 96-1

Protection Level

Generalized system performance (Actual system performance in any one test method may differ.)

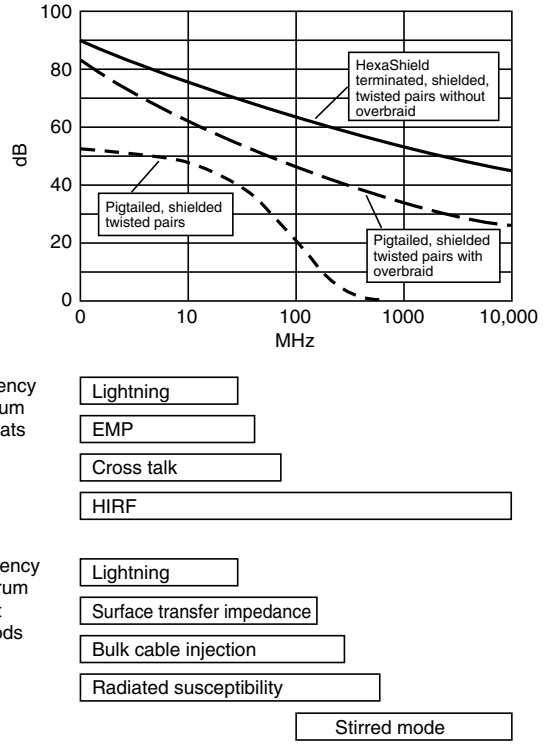

Catalog 1308940
Revised 9-14

www.te.com

Dimensions are shown for reference purposes only. Specifications subject to change.

Dimensions are in millimeters unless otherwise specified.

USA: +1 800 522 6752
Asia Pacific: +86 0 400 820 6015
UK: +44 800 267 666

For additional support numbers please visit www.te.com

EMC Performance (Continued)

Typical HexaShield Applications

Civilian and military aircraft
Avionics
Fighter aircraft
Missiles and launch support systems
Armored and military support vehicles
Navy ships (total shipboard hardening)
Military communications
Engines (FADEC harness hardening)

HexaShield Product Range

Accommodates the following connector types*:
MIL-C-26482 Series 1
MIL-DTL-38999 Series 1, 2, 3, and 4
MIL-C-26482 Series 2
MIL-DTL-83723 Series 1 and 3
DBAD
ARINC 600
ARINC 404

*Please contact TE Connectivity for other connector types and special requests.

Table of Contents

Nanominiature Connectors
Introduction 5-4
Nanominiature Connectors Technical and Performance Data 5-5

DUALOBE Rectangular Connectors
Introduction 5-6
Wired Connectors
Single Row 5-7
Two Row 5-8
Part Numbering Guideline for Wired Connectors 5-9
Jumper Assemblies
Single Row Connectors 5-10, 5-11
Two Row Connectors 5-12, 5-13
Part Numbering Guideline for Jumper Assemblies 5-14
Surface Mount Connectors
Horizontal
Single Row 5-15
Two Row 5-16
Vertical
Single Row . . . . . 5-17 to 5-19
Two Row 5-20, 5-21
Thru-Hole Connectors
Horizontal
1 Row to 2 Row 5-22
2 Row to 4 Row 5-23
Vertical
1 Row to 2 Row 5-24
2 Row to 4 Row 5-25
Part Numbering Guideline for SMT and Thru-Hole Connectors 5-26
Flex Termination “Duckbill” Connectors
Two Row 5-27, 5-28
Part Numbering Guideline for Flex Termination “Duckbill” Connectors 5-28
Solder Cup Connectors
Single Row 5-29
Two Row 5-30
Part Numbering Guideline for Solder Cup Termination 5-31
Panel Mount Connectors
Single Row 5-32
Two Row 5-33
Part Numbering Guideline for Panel Mount Connectors 5-34
Part Number Index Cross Reference . . . . . 5-35 to 5-43

Catalog 1308940
Revised 9-14

www.te.com

Dimensions are shown for reference purposes only. Specifications subject to change.

Dimensions are in millimeters unless otherwise specified.

USA: +1 800 522 6752
Asia Pacific: +86 0 400 820 6015
UK: +44 800 267 666

For additional support numbers please visit www.te.com

Table of Contents (Continued)

Strip Connectors
Introduction 5-44
Wired Connectors 5-45
Part Numbering Guideline for Strip Wired Connectors 5-46
Surface Mount Connectors 5-47
Thru-Hole Connectors 5-48
Part Numbering Guideline for SMT and Thru-Hole Connectors 5-49
Part Number Index Cross Reference 5-50

Microminiature Connectors
Introduction 5-51

Micro-D Connectors
Introduction 5-52
MCK/MCD/MCDM Series Metal and Plastic Shell Connectors 5-53
How To Specify MCK and MCD Connectors 5-54
Contact Arrangements 5-55
MCK Series Metal Shell Connectors 5-56
MCK Series Metal Shell Connectors Panel Mounting — Cutout Dimensions 5-57
MCD Series Plastic Shell Connectors 5-58, 5-59
MCD Series Plastic Shell Connectors Panel Mounting — Cutout Dimensions 5-60
Mounting and Coupling Hardware 5-61, 5-62
MCK Transition Blocks
RT1 — Right Angle . . . . . 5-63 to 5-65
ST1 — Straight . . . . . 5-66 to 5-68
MCK ST2 Series Straight Mount PCB Connectors . . . . . 5-69 to 5-71
MCDM Series Metal Shell Connectors 5-72, 5-73
MCDM Series Metal Shell RF COMBOMATE Connectors . . . . . 5-74 to 5-76
MCDM Series Metal Shell Connectors Panel Mounting — Cutout Dimensions 5-77
MIL-DTL-83513 Cross Reference . . . . . 5-78 to 5-82

Table of Contents (Continued)

Rectangular Connectors
Introduction 5-83
TWIST Pin Contact Data 5-84
MCE Plastic
MCE Series Plastic Shell Edgeboard Connectors . . . . . .5-85 to 5-87
Technical & Performance Data 5-85
Mother Board & Daughter Board Connectors 5-86
How To Specify 5-87
MCEM Metal Shell
MCEM Series Metal Shell Edgeboard Connectors . . . . . .5-88 to 5-91
Performance Data 5-88
128 Layout Connector 5-89, 5-90
How To Specify 5-90
184 Layout Connector 5-91
MCJ Plastic
MCJ Series Plastic Shell Center Jackscrew Connectors 5-92, 5-93
10 & 14 Layout Connectors 5-92
26, 38 & 46 Layout Connectors 5-93
How To Specify 5-93
Contact Arrangements 5-93
MCJM Metal Shell
MCJM Series Metal Shell Center Jackscrew Connectors 5-92, 5-94, 5-95
Technical & Performance Data 5-94
Plug & Receptacle Connectors 5-94, 5-95
How To Specify 5-95
MCS .050 [1.27] Centerline
MCS Series Strip Connectors 5-96
Strip Connectors 5-96
How To Specify 5-96
High Density Standard Module (HDSM) Connectors . . . . . .5-97 to 5-100

Catalog 1308940
Revised 9-14

www.te.com

Dimensions are shown for reference purposes only. Specifications subject to change.

Dimensions are in millimeters unless otherwise specified.

USA: +1 800 522 6752
Asia Pacific: +86 0 400 820 6015
UK: +44 800 267 666

For additional support numbers please visit www.te.com

NANONICS Nanominiature Connectors Introduction

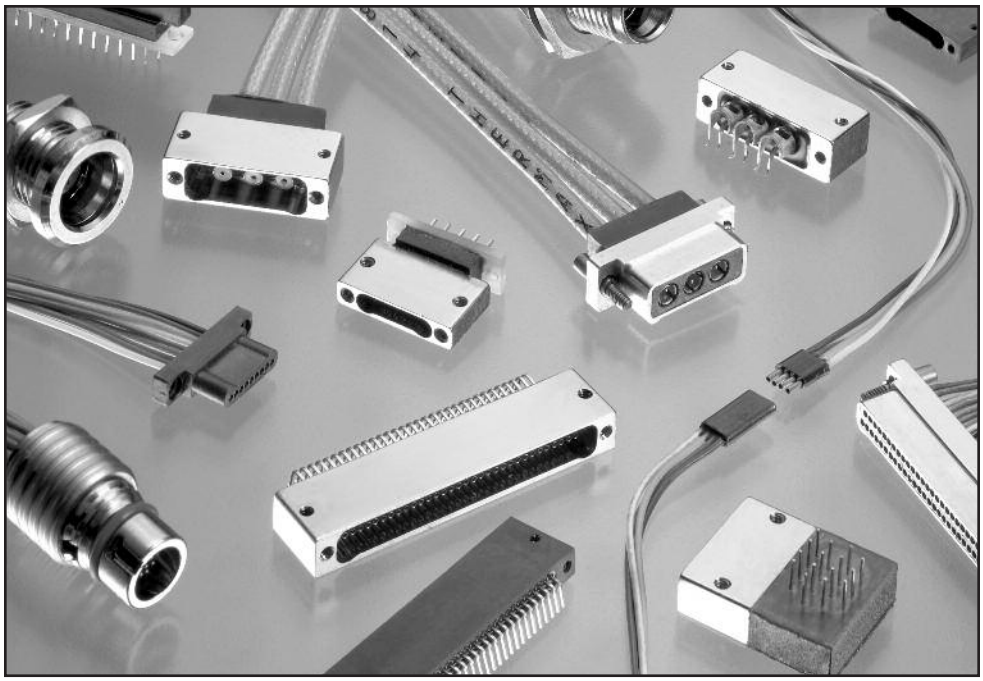

Nanominiature connectors constitute a family of interconnect devices with center to center contact spacing of .025". In comparison to other connector families, they are often thought of as the smallest practical connector system for separable interfaces. Despite being smaller, these nanominiature connectors are tested with a few size-related modifications per the guidelines of MIL-DTL-83513 (written for .050" microminiature connectors). Nanominiature connectors combine their appealing size and weight with desired performance attributes such as high reliability, low contact resistance and wide operating temperature range, making them among the smallest and toughest connectors available to designers.

The Contact System

NANONICS connectors utilize the same contact system throughout the entire product family. This contact system uses a “spring socket” as opposed to most connector designs, which use a “spring pin”. In this design, the socket member of the contact pair employs a dimple located inside the contact tube. When the pin is engaged with this socket, the dimple creates the desired spring action by forcing the pin to offset to the opposite side of the socket tube. The result is a gold-on-gold mating area covering a minimum of 180° of the contact surface. This also creates a desirable mating force of no greater than 6 ounces per contact and a resistance of .003 ~ .008 ohms. This type of contact system begins with a pre-plated BeCu alloy material that is then formed to yield a rugged, seamless contact. Both the blind-bore seamless pin and the seamless one piece socket have a burnished gold finish on both the inside and outside surfaces. This gold finish provides contact integrity for superior reliability and environmental performance.

Contact Configuration

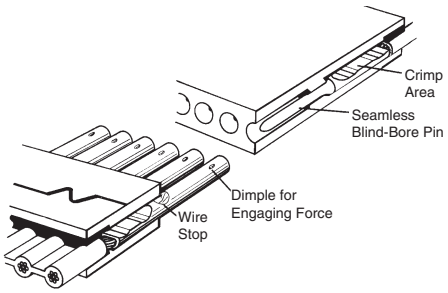

Dimensions are shown for reference purposes only. Specifications subject to change.

Dimensions are in millimeters unless otherwise specified.

USA: +1 800 522 6752
Asia Pacific: +86 0 400 820 6015
UK: +44 800 267 666

For additional support numbers please visit www.te.com

NANONICS Nanominiature Connectors

Technical and Performance Data

Electrical

Contact Resistance — .003 - .008 ohms

Current Rating — 1 amp max. per contact

Dielectric Withstanding Voltage — Volts RMS 60 Hz at room ambient conditions. At sea level 500V. At 70,000 ft. 150V.

Insulation Resistance — 5000 megohms min. (@ 500 VDC) at room ambient conditions.

Magnetic Permeability — 2 mu max.

Mechanical

Contact Engagement & Separation — Engaging force is 6.0 oz. max. Separation force is 0.5 oz. min.

Mating Force Maximum — Calculated as 10 oz. multiplied by the number of contacts.

Environmental

Temperature Range — -200° C to +200° C

Shock — No discontinuity in excess of 1 µ sec. when tested in accordance with MIL-STD-1344, Method 2004.1, Test Condition E.

Vibration — No discontinuity in excess of 1 µ sec. when tested in accordance with MIL-STD-1344, Method 2005.1, Test Condition IV.

Solderability — Connectors shall meet the test requirements of MIL-STD-202, Method 208.

Durablity — No mechanical or electrical defects detrimental to the function of the connectors after 500 cycles of mating and unmating, without the use of hardware.

Humidity — After exposure to humidity as specified by MIL-STD-1344, Method 1002.2, Type II, IR shall be 1 megohm min. (@ 100 VDC) within 2 hours of conditioning and 1000 megohms min. (@ 100 VDC) after 24 hours of conditioning.

Salt Spray — Connectors shall meet the performance requirements of contact resistance, mating and unmating forces, and contact retention after being subjected to the 48 hour 5 % solution salt spray test per MIL-STD-1344, Method 1001, Condition B.

Fluid Immersion — Unmated connectors after being fully immersed in one of the following fluids, for the prescribed time, will mate at a force of 10 oz. multiplied by the number of contacts or less: Perchloroethylene, 2 hours; Lubricating oil per MIL-L-23699, 20 hours.

Crimp Tensile Strength — (Unassembled contacts with crimped stranded wire terminations) Wires will not pull out of the contacts when the following axial load is applied: #30 AWG, 2 lbs.

Thermal Vacuum Outgassing — Connectors shall have a maximum total mass loss (TML) of 1.0 % of the original specimen mass and a maximum collected volatile condensable materials (CVCM) content of 0.1 % of the original specimen mass when tested in accordance with SP-R-0022A.

Material and Finish

Contacts — BeCu alloy plated with gold per MIL-G-45204 Type II over nickel per QQ-N-290.

Plastic Insulators and Shells — 30% glassed filled Liquid Crystal Polymer (LCP).

Metal Shells — 6061-T6 Aluminum with electroless nickel plating per MIL-C-26074. Stainless steel and gold plated shells are also available.

Catalog 1308940
Revised 9-14

www.te.com

Dimensions are shown for reference purposes only. Specifications subject to change.

Dimensions are in millimeters unless otherwise specified.

USA: +1 800 522 6752
Asia Pacific: +86 0 400 820 6015
UK: +44 800 267 666

For additional support numbers please visit www.te.com

NANONICS DUALOBE Rectangular Connectors Introduction

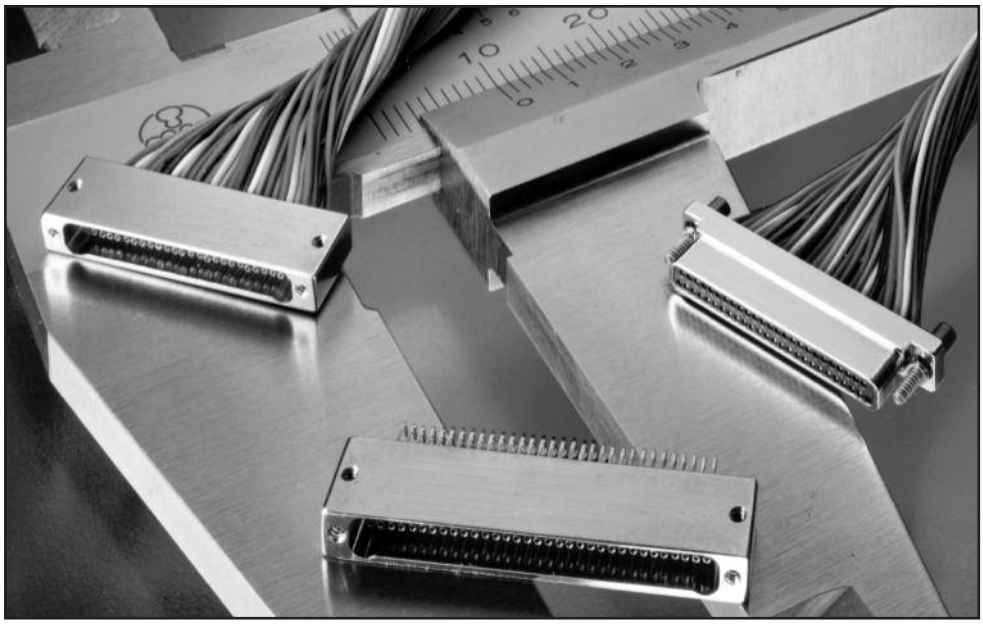

NANONICS rectangular connectors have earned the distinction of being the most popular and widely utilized style of Nano connectors. These connectors incorporate the DUALOBE polarization scheme. This polarization scheme negates the need for mating guide pins and does not increase the package size. The DUALOBE series of connectors are available in both machined aluminum and molded plastic shells, both in one and two row connector housings. Single row configurations commonly have standard pin counts from 5 to 51, while the higher density two row configurations have pin counts from 9 to 65. These connectors can be terminated in many different ways. Standard configurations include wires, surface mount, thru-hole, solder cup, “duckbill”, and panel mount. Wired harness assemblies and custom configurations can also be accommodated. Such custom configurations include filtered, hermetic, environmentally sealed, and blind mate connectors.

This family of connectors is designed to meet the requirements of MIL-DTL-83513, with a few size related modifications. Designed primarily for the military and aerospace industry, the DUALOBE series is especially well suited when high reliability, coupled with reduced size and weight, are serious design parameters. A clear example of this is the use of NANONICS connectors in such applications as smart munitions, missile defense, aircraft communications, and UAV’s. In addition to the above applications, with the wide temperature range of the DUALOBE connector (-200°C to +200°C), the space and petroleum industries have also found many uses for this connector. The performance and reliability at cryogenic temperatures, along with the low outgassing material properties, has led to an increased usage in space applications. Such applications include nitrogen-cooled optics, low and high earth orbiting satellites, telescopes, deep space probes, orbiters, and rovers. On the opposite end of the spectrum, the petroleum exploration industry utilizes these connectors for their performance and reliability in downhole environments at temperatures exceeding 175°C.

Dimensions are shown for reference purposes only. Specifications subject to change.

Dimensions are in millimeters unless otherwise specified.

USA: +1 800 522 6752
Asia Pacific: +86 0 400 820 6015
UK: +44 800 267 666

For additional support numbers please visit www.te.com

NANONICS Wired Connectors — Single Row, Flying Leads

Plug

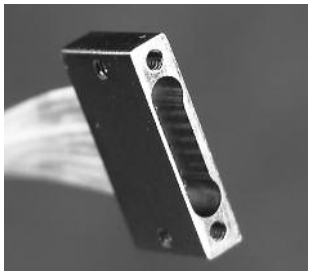

Receptacle

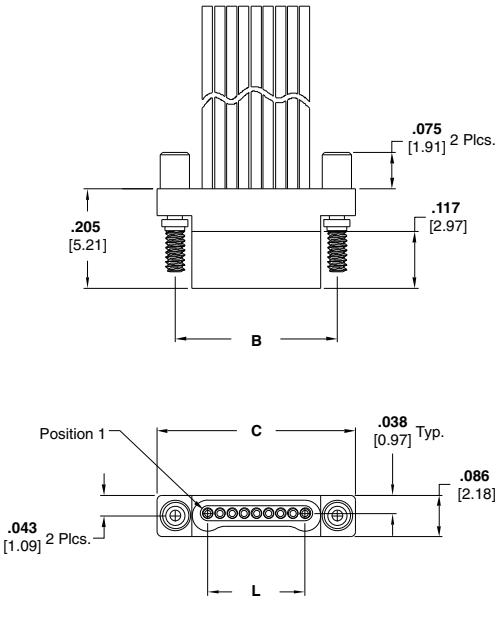

Plug with Flying Leads
Drawing Number 1589455

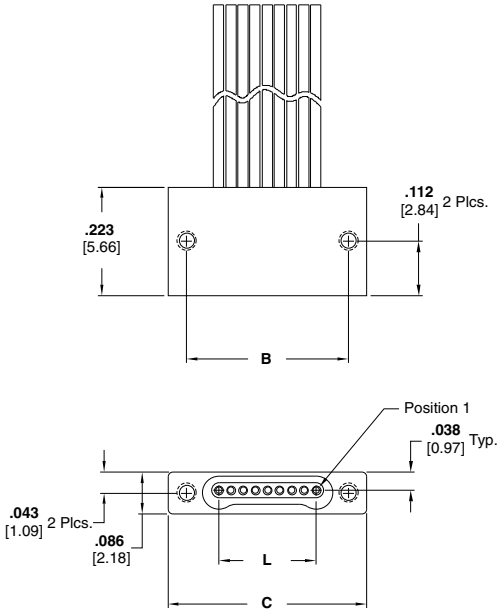

Receptacle with Flying Leads
Drawing Number 1589457

Product Facts

- **Plastic or Metal Shell**
- **Standard Sizes: 5, 9, 15, 25, 37, and 51**
- **Factory wired to your specifications**
- **Contact TE Connectivity for custom configurations**

Size	Dimensions		
	B	C	L
5	**0.233** [5.92]	**0.3085** [7.84]	**0.100** [2.54]
9	**0.333** [8.46]	**0.4085** [10.38]	**0.200** [5.08]
15	**0.483** [12.27]	**0.5585** [14.19]	**0.350** [8.89]
25	**0.733** [18.62]	**0.8085** [20.54]	**0.600** [15.24]
37	**1.033** [26.24]	**1.1085** [28.16]	**0.900** [22.86]
51	**1.383** [35.13]	**1.4585** [37.05]	**1.250** [31.75]

Catalog 1308940
Revised 9-14

www.te.com

Dimensions are shown for reference purposes only. Specifications subject to change.

Dimensions are in millimeters unless otherwise specified.

USA: +1 800 522 6752
Asia Pacific: +86 0 400 820 6015
UK: +44 800 267 666

For additional support numbers please visit www.te.com

NANONICS Wired Connectors — Two Row, Flying Leads

Plug

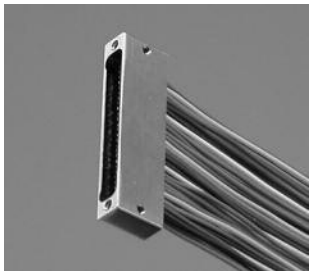

Receptacle

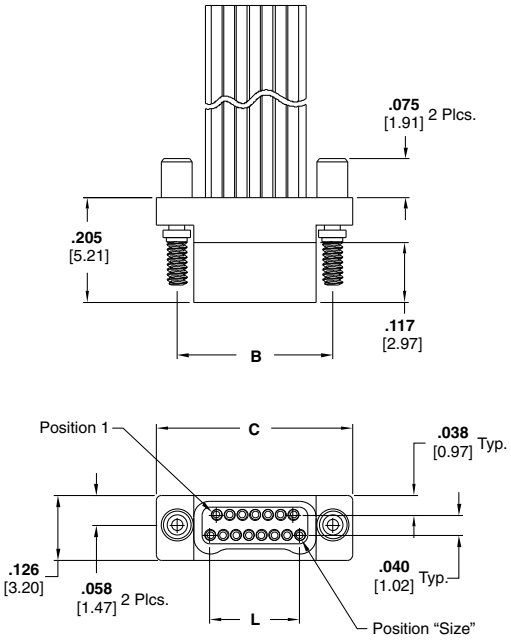

Plug with Flying Leads
Drawing Number 1589472

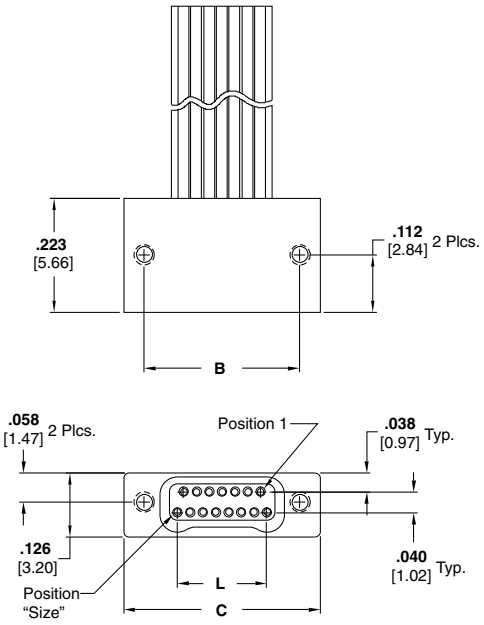

Receptacle with Flying Leads
Drawing Number 1589476

Product Facts

- Plastic or Metal Shell
- Standard Sizes: 9, 15, 25, 37, 51 and 65
- Factory wired to your specifications
- Contact TE Connectivity for custom configurations

Size	Dimensions		
	B	C	L
9	**0.229** [5.82]	**0.3085** [7.84]	**0.100** [2.54]
15	**0.304** [7.72]	**0.3835** [9.74]	**0.175** [4.45]
25	**0.429** [10.90]	**0.5085** [12.92]	**0.300** [7.62]
37	**0.579** [14.71]	**0.6585** [16.73]	**0.450** [11.43]
51	**0.754** [19.15]	**0.8335** [21.17]	**0.625** [15.88]
65	**0.929** [23.60]	**1.0085** [25.62]	**0.800** [20.32]

Catalog 1308940
Revised 9-14

www.te.com

Dimensions are shown for reference purposes only. Specifications subject to change.

Dimensions are in millimeters unless otherwise specified.

USA: +1 800 522 6752
Asia Pacific: +86 0 400 820 6015
UK: +44 800 267 666

For additional support numbers please visit www.te.com

Part Numbering Guideline for NANONICS Wired Connectors

DUALOBE Connectors - Wire Terminations

S X X XXX XX X XX XXX X

Class

S DUALOBE

Rows

S 1 Row
T 2 Row

Type

L LCP (Plastic)
M Metal (Al, Ni Plate)

Positions

005 5 Position (single row only)
009 9 Position
015 15 Position
025 25 Position
037 37 Position
051 51 Position
065 65 Position (two row only)

Configurations

PC Plug
SC Receptacle

Conductor Size/Strands

0 28 AWG Solid
1 30 AWG Solid
2 30 AWG 7 Strand
3 32 AWG 7 Strand
4 34 AWG 7 Strand

Conductor Type

DX White PTFE
DC Color Coded PTFE
DM Color Coded PTFE per MIL-STD-681
DT White ETFE M22759/33
GX FEP Ribbon Cable

Conductor Length

XXX Three numbers only, length is in inches (i.e. 012 = twelve inches)
CXX A “C” followed by two numbers, length is in centimeters (i.e. C06 = six centimeters)
MXX An “M” followed by two numbers, length is in meters (i.e. M02 = two meters)

Threads/Jackscrew

Threads (Receptacles Only)	Jackscrews (Plugs Only)
N Thread for 1.0 mm Jackscrews	**M** 1.0 mm Non Captive Jackscrew
Q Thread for 1.2 mm Jackscrews	**N** 1.0 mm Captive Jackscrew
	Q 1.2 mm Captive Jackscrew

Catalog 1308940
Revised 9-14

www.te.com

Dimensions are shown for reference purposes only. Specifications subject to change.

Dimensions are in millimeters unless otherwise specified.

USA: +1 800 522 6752
Asia Pacific: +86 0 400 820 6015
UK: +44 800 267 666

For additional support numbers please visit www.te.com

NANONICS Jumper Assembly Connectors — Single Row

Plug to Receptacle

Product Facts

- Plastic or Metal Shell
- Standard Sizes: 5, 9, 15, 25, 37, and 51
- Factory wired to your specifications
- Contact TE Connectivity for custom configurations

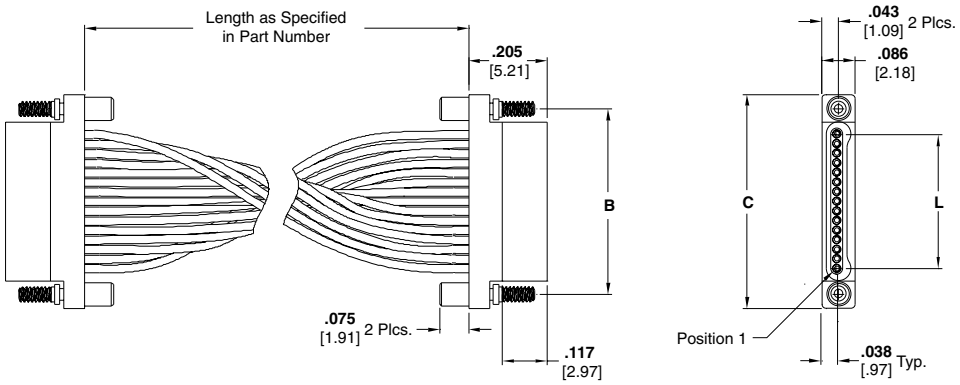

Plug to Plug
Drawing Number 1589735

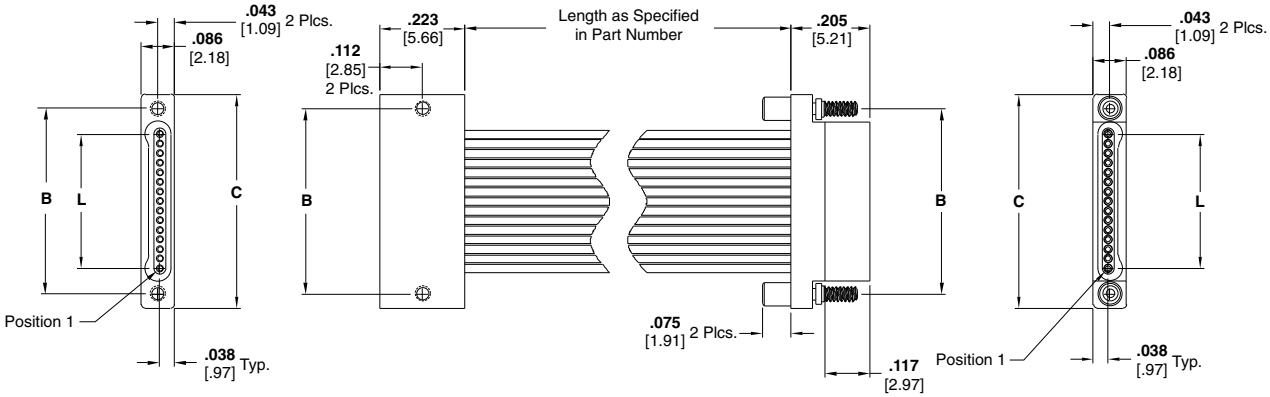

Plug to Receptacle
Drawing Number 1589736

Size	Dimensions		
	B	C	L
5	**0.233** [5.92]	**0.3085** [7.84]	**0.100** [2.54]
9	**0.333** [8.46]	**0.4085** [10.38]	**0.200** [5.08]
15	**0.483** [12.27]	**0.5585** [14.19]	**0.350** [8.89]
25	**0.733** [18.62]	**0.8085** [20.54]	**0.600** [15.24]
37	**1.033** [26.24]	**1.1085** [28.16]	**0.900** [22.86]
51	**1.383** [35.13]	**1.4585** [37.05]	**1.250** [31.75]

Catalog 1308940
Revised 9-14

www.te.com

Dimensions are shown for reference purposes only. Specifications subject to change.

Dimensions are in millimeters unless otherwise specified.

USA: +1 800 522 6752
Asia Pacific: +86 0 400 820 6015
UK: +44 800 267 666

For additional support numbers please visit www.te.com

NANONICS Jumper Assembly Connectors — Single Row (Continued)

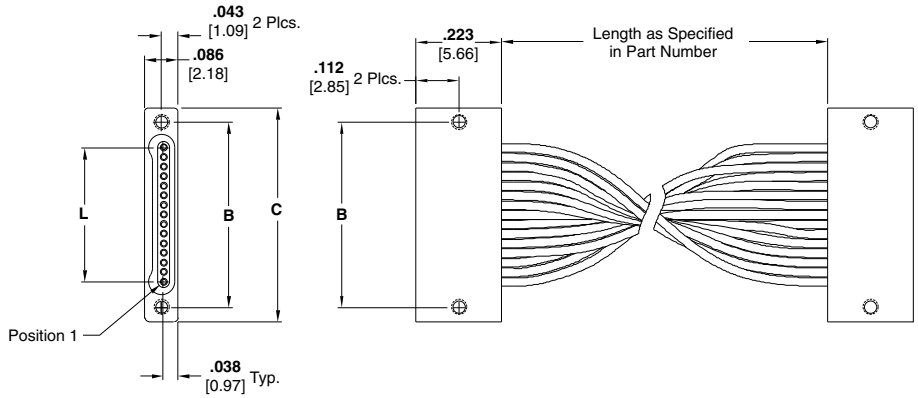

Receptacle to Receptacle
Drawing Number 1589803

Size	Dimensions		
	B	C	L
5	**0.233** [5.92]	**0.3085** [7.84]	**0.100** [2.54]
9	**0.333** [8.46]	**0.4085** [10.38]	**0.200** [5.08]
15	**0.483** [12.27]	**0.5585** [14.19]	**0.350** [8.89]
25	**0.733** [18.62]	**0.8085** [20.54]	**0.600** [15.24]
37	**1.033** [26.24]	**1.1085** [28.16]	**0.900** [22.86]
51	**1.383** [35.13]	**1.4585** [37.05]	**1.250** [31.75]

Dimensions are shown for reference purposes only. Specifications subject to change.

Dimensions are in millimeters unless otherwise specified.

USA: +1 800 522 6752
Asia Pacific: +86 0 400 820 6015
UK: +44 800 267 666

For additional support numbers please visit www.te.com

NANONICS Jumper Assembly Connectors — Two Row

Plug to Receptacle

Product Facts

- Plastic or Metal Shell
- Standard Sizes: 9, 15, 25, 37, 51 and 65
- Factory wired to your specifications
- Contact TE Connectivity for custom configurations

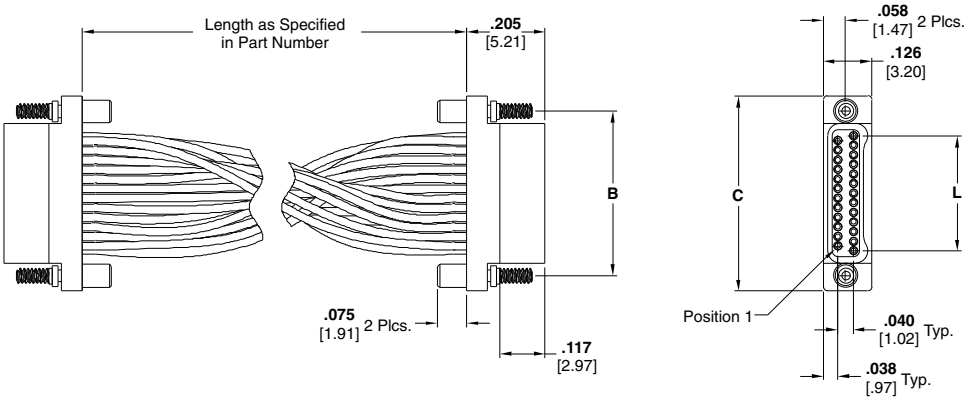

Plug to Plug
Drawing Number 1589737

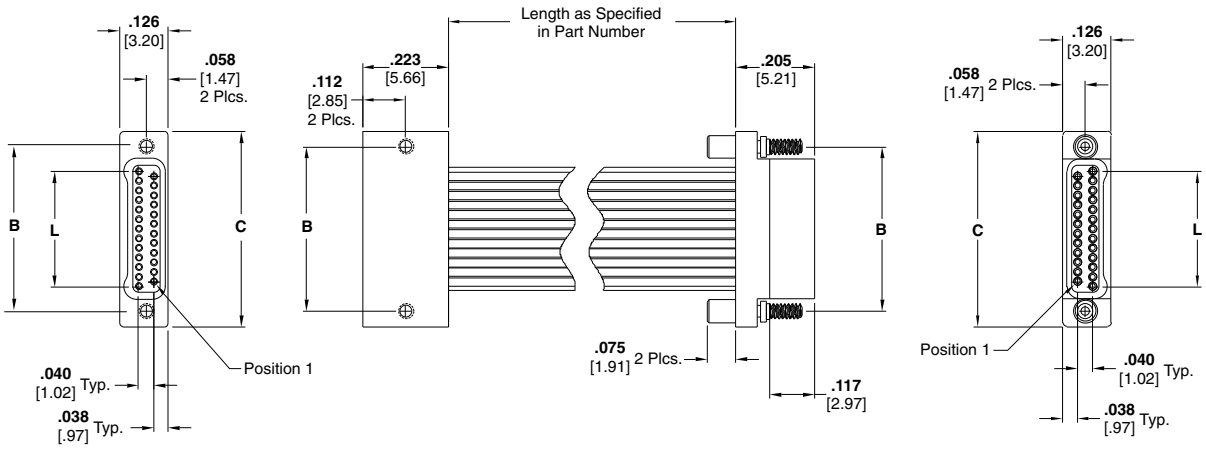

Plug to Receptacle
Drawing Number 1589738

Size	Dimensions		
	B	C	L
9	**0.229** [5.82]	**0.3085** [7.84]	**0.100** [2.54]
15	**0.304** [7.72]	**0.3835** [9.74]	**0.175** [4.45]
25	**0.429** [10.90]	**0.5085** [12.92]	**0.300** [7.62]
37	**0.579** [14.71]	**0.6585** [16.73]	**0.450** [11.43]
51	**0.754** [19.15]	**0.8335** [21.17]	**0.625** [15.88]
65	**0.929** [23.60]	**1.0085** [25.62]	**0.800** [20.32]

Catalog 1308940
Revised 9-14

www.te.com

Dimensions are shown for reference purposes only. Specifications subject to change.

Dimensions are in millimeters unless otherwise specified.

USA: +1 800 522 6752
Asia Pacific: +86 0 400 820 6015
UK: +44 800 267 666

For additional support numbers please visit www.te.com

NANONICS Jumper Assembly Connectors — Two Row (Continued)

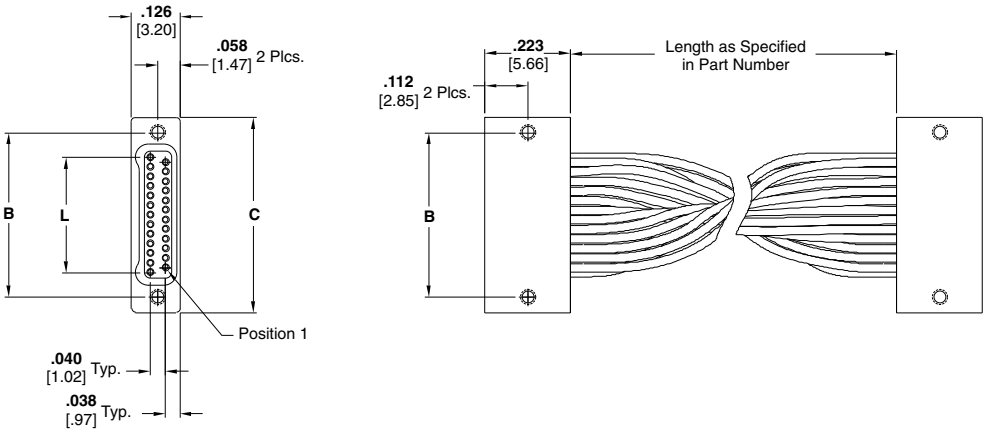

Receptacle to Receptacle
Drawing Number 1589804

Size	Dimensions		
	B	C	L
9	**0.229** [5.82]	**0.3085** [7.84]	**0.100** [2.54]
15	**0.304** [7.72]	**0.3835** [9.74]	**0.175** [4.45]
25	**0.429** [10.90]	**0.5085** [12.92]	**0.300** [7.62]
37	**0.579** [14.71]	**0.6585** [16.73]	**0.450** [11.43]
51	**0.754** [19.15]	**0.8335** [21.17]	**0.625** [15.88]
65	**0.929** [23.60]	**1.0085** [25.62]	**0.800** [20.32]

Catalog 1308940
Revised 9-14

www.te.com

Dimensions are shown for reference purposes only. Specifications subject to change.

Dimensions are in millimeters unless otherwise specified.

USA: +1 800 522 6752
Asia Pacific: +86 0 400 820 6015
UK: +44 800 267 666

For additional support numbers please visit www.te.com

Part Numbering Guideline for NANONICS Jumper Assemblies

DUALOBE Connectors - Jumper Terminations

J X X XXX XX X XX XXX X

Class

J Jumper

Rows

S 1 Row
T 2 Row

Type

L LCP (Plastic)
M Metal (Al, Ni Plate)

Positions

005 5 Position (single row only)
009 9 Position
015 15 Position
025 25 Position
037 37 Position
051 51 Position
065 65 Position (two row only)

Configuration

PP Plug to Plug, 1 to 1
PR Plug to Receptacle, 1 to 1
PD Plug to Plug, low to high in row
RR Receptacle to Receptacle, 1 to 1

Conductor Size/Strands

0 28 AWG Solid
1 30 AWG Solid
2 30 AWG 7 Strand
3 32 AWG 7 Strand
4 34 AWG 7 Strand

Conductor Type

DX White PTFE
DC Color Coded PTFE
DM Color Coded PTFE per MIL-STD-681
DT White ETFE M22759/33
GX FEP Ribbon Cable

Conductor Length

XXX Three numbers only, length is in inches (i.e. 012 = twelve inches)
CXX A “C” followed by two numbers, length is in centimeters (i.e. C06 = 6 centimeters)
MXX An “M” followed by two numbers, length is in meters (i.e. M02 = 2 meters)

Threads/Jackscrews

Threads (Receptacles Only)

N Thread for 1.0 mm Jackscrews
Q Thread for 1.2 mm Jackscrews

Jackscrews (Plugs Only)

M 1.0 mm Non Captive Jackscrews
N 1.0 mm Captive Jackscrews
Q 1.2 mm Captive Jackscrews

Dimensions are shown for reference purposes only. Specifications subject to change.

Dimensions are in millimeters unless otherwise specified.

USA: +1 800 522 6752
Asia Pacific: +86 0 400 820 6015
UK: +44 800 267 666

For additional support numbers please visit www.te.com

NANONICS Surface Mount Connectors — Horizontal, Single Row

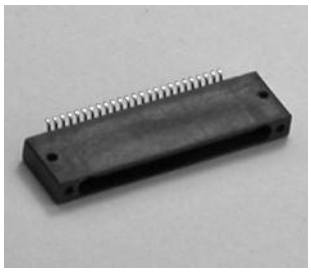

Receptacle

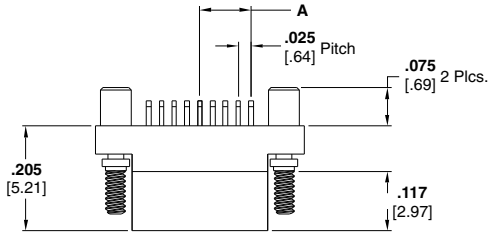

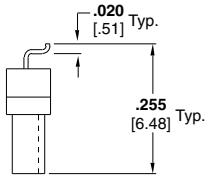

Jackscrews Omitted for Clarity

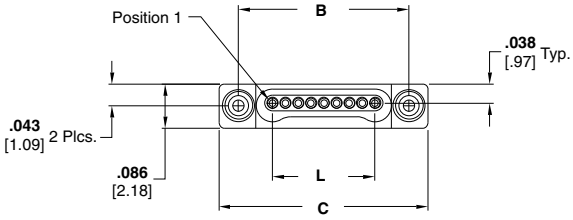

Plug Assembly
Drawing Number 1589460

Product Facts

- Plastic or Metal Shell
- Standard Sizes: 5, 9, 15, 25, 37, and 51
- Contact TE Connectivity for custom configurations
- Suggested pad layouts are available on the referenced drawings on the TE website

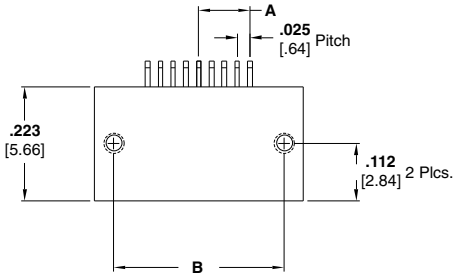

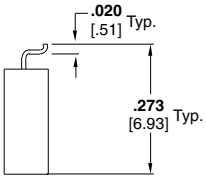

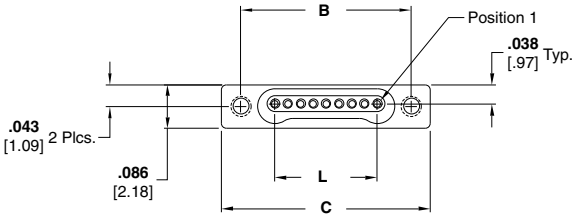

Receptacle Assembly
Drawing Number 1589462

Size	Dimensions			
	A	B	C	L
5	**0.050** [1.27]	**0.233** [5.92]	**0.3085** [7.84]	**0.100** [2.54]
9	**0.100** [2.54]	**0.333** [8.46]	**0.4085** [10.38]	**0.200** [5.08]
15	**0.175** [4.45]	**0.483** [12.27]	**0.5585** [14.19]	**0.350** [8.89]
25	**0.300** [7.62]	**0.733** [18.62]	**0.8085** [20.54]	**0.600** [15.24]
37	**0.450** [11.43]	**1.085** [26.24]	**1.1085** [28.16]	**0.900** [22.86]
51	**0.625** [15.88]	**1.383** [35.13]	**1.4585** [37.05]	**1.250** [31.75]

Catalog 1308940
Revised 9-14

www.te.com

Dimensions are shown for reference purposes only. Specifications subject to change.

Dimensions are in millimeters unless otherwise specified.

USA: +1 800 522 6752
Asia Pacific: +86 0 400 820 6015
UK: +44 800 267 666

For additional support numbers please visit www.te.com

NANONICS Surface Mount Connectors — Horizontal, Two Row

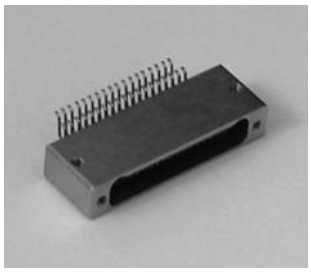

Receptacle

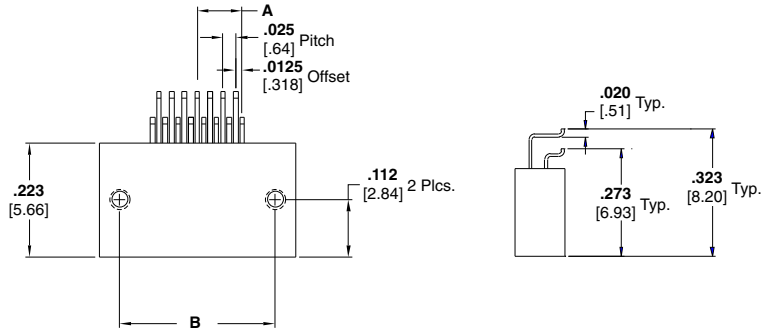

Product Facts

- **Plastic or Metal Shell**
- **Standard Sizes: 9, 15, 25, 37, 51 and 65**
- **Contact TE Connectivity for custom configurations**
- **Suggested pad layouts are available on the referenced drawings on the TE website**

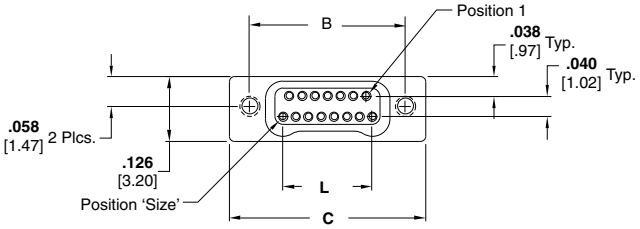

Receptacle Assembly
Drawing Number 1589483

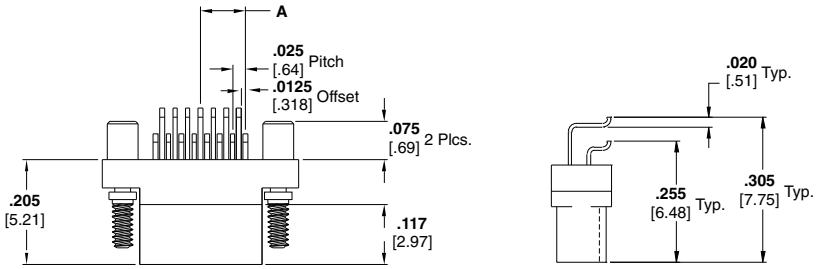

Jackscrews Omitted for Clarity

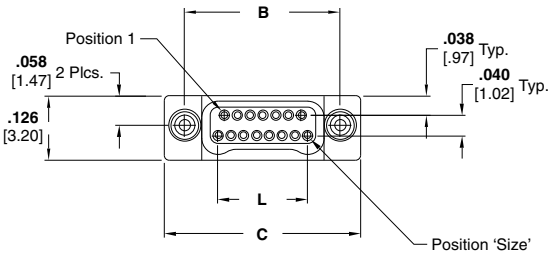

Plug Assembly
Drawing Number 1589490

Size	Dimensions			
	A	B	C	L
9	**0.050** [1.27]	**0.229** [5.82]	**0.3085** [7.84]	**0.100** [2.54]
15	**0.875** [2.23]	**0.304** [7.72]	**0.3835** [9.74]	**0.175** [4.45]
25	**0.150** [3.81]	**0.429** [10.90]	**0.5085** [12.92]	**0.300** [8.89]
37	**0.225** [5.72]	**0.579** [14.71]	**0.6585** [16.73]	**0.450** [11.43]
51	**0.313** [7.95]	**0.754** [19.15]	**0.8335** [21.17]	**0.625** [15.88]
65	**0.400** [10.16]	**0.929** [23.60]	**1.0085** [25.62]	**0.800** [20.32]

Dimensions are shown for reference purposes only. Specifications subject to change.

Dimensions are in millimeters unless otherwise specified.

USA: +1 800 522 6752
Asia Pacific: +86 0 400 820 6015
UK: +44 800 267 666

For additional support numbers please visit www.te.com

NANONICS Surface Mount Connectors — Vertical, Single Row

Receptacle

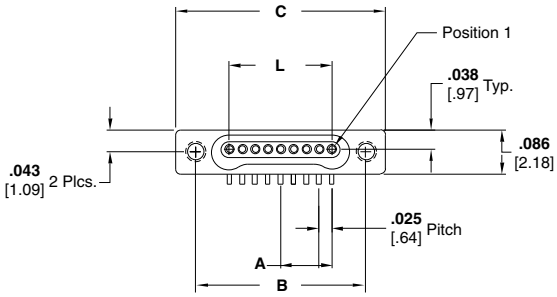

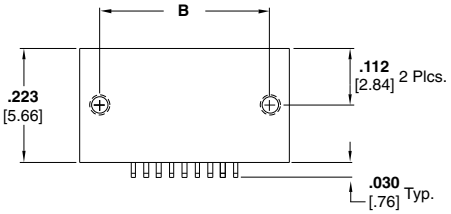

Receptacle Assembly
Drawing Number 1589463

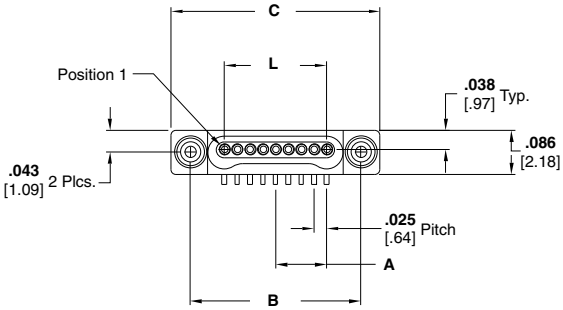

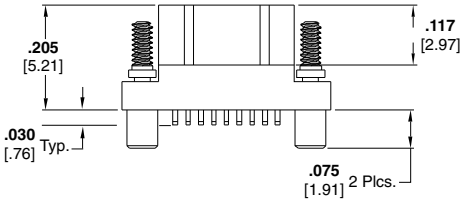

Plug Assembly
Drawing Number 1589465

Product Facts

- Plastic or Metal Shell
- Standard Sizes: 5, 9, 15, 25, 37, and 51
- Contact TE Connectivity for custom configurations
- Suggested pad layouts are available on the referenced drawings on the TE website

Size	Dimensions			
	A	B	C	L
5	**0.050** [1.27]	**0.233** [5.92]	**0.3085** [7.84]	**0.100** [2.54]
9	**0.100** [2.54]	**0.333** [8.46]	**0.4085** [10.38]	**0.200** [5.08]
15	**0.175** [4.45]	**0.483** [12.27]	**0.5585** [14.19]	**0.350** [8.89]
25	**0.300** [7.62]	**0.733** [18.62]	**0.8085** [20.54]	**0.600** [15.24]
37	**0.450** [11.43]	**1.085** [26.24]	**1.1085** [28.16]	**0.900** [22.86]
51	**0.625** [15.88]	**1.383** [35.13]	**1.4585** [37.05]	**1.250** [31.75]

Catalog 1308940
Revised 9-14

www.te.com

Dimensions are shown for reference purposes only. Specifications subject to change.

Dimensions are in millimeters unless otherwise specified.

USA: +1 800 522 6752
Asia Pacific: +86 0 400 820 6015
UK: +44 800 267 666

For additional support numbers please visit www.te.com

NANONICS Surface Mount Connectors — Vertical, Single Row with Alternating Leads

Product Facts

- **Plastic or Metal Shell**
- **Standard Sizes: 5, 9, 15, 25, 37, and 51**
- **Contact TE Connectivity for custom configurations**
- **Suggested pad layouts are available on the referenced drawings on the TE website**

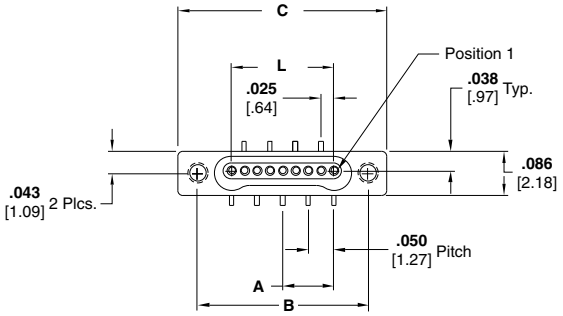

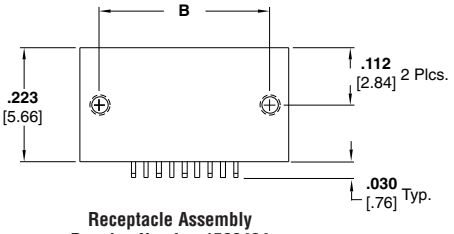

Receptacle Assembly
Drawing Number 1589464

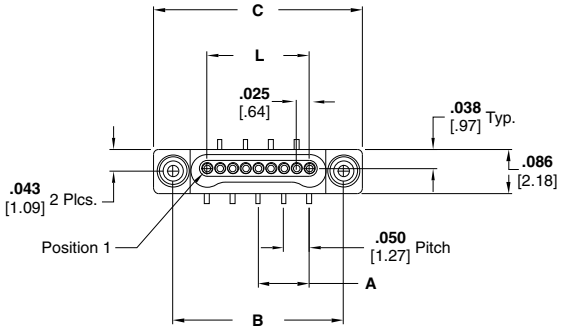

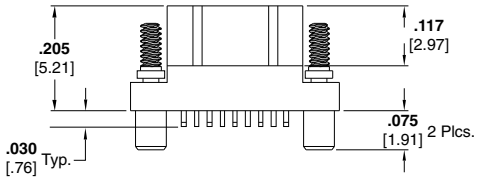

Plug Assembly
Drawing Number 1589466

Size	Dimensions			
	A	B	C	L
5	**0.050** [1.27]	**0.233** [5.92]	**0.3085** [7.84]	**0.100** [2.54]
9	**0.100** [2.54]	**0.333** [8.46]	**0.4085** [10.38]	**0.200** [5.08]
15	**0.175** [4.45]	**0.483** [12.27]	**0.5585** [14.19]	**0.350** [8.89]
25	**0.300** [7.62]	**0.733** [18.62]	**0.8085** [20.54]	**0.600** [15.24]
37	**0.450** [11.43]	**1.085** [26.24]	**1.1085** [28.16]	**0.900** [22.86]
51	**0.625** [15.88]	**1.383** [35.13]	**1.4585** [37.05]	**1.250** [31.75]

Catalog 1308940
Revised 9-14

www.te.com

Dimensions are shown for reference purposes only. Specifications subject to change.

Dimensions are in millimeters unless otherwise specified.

USA: +1 800 522 6752
Asia Pacific: +86 0 400 820 6015
UK: +44 800 267 666

For additional support numbers please visit www.te.com

NANONICS Surface Mount Connectors — Vertical, Single Row with Integrated Standoffs

Product Facts

- **Metal Shell**
- **Standard Sizes: 5 , 9, 15, 25, 37, and 51**
- **Contact TE Connectivity for custom configurations**
- **Suggested pad layouts are available on the referenced drawings on the TE website**

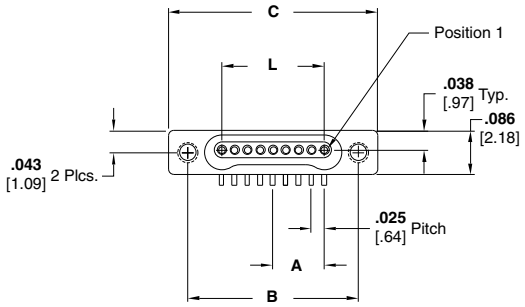

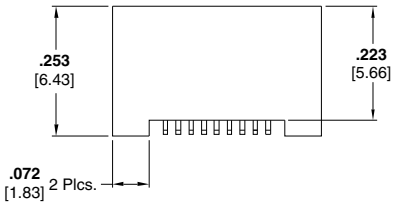

Receptacle Assembly
Drawing Number 1589467

Size	Dimensions			
	A	B	C	L
5	**0.050** [1.27]	**0.233** [5.92]	**0.3085** [7.84]	**0.100** [2.54]
9	**0.100** [2.54]	**0.333** [8.46]	**0.4085** [10.38]	**0.200** [5.08]
15	**0.175** [4.45]	**0.483** [12.27]	**0.5585** [14.19]	**0.350** [8.89]
25	**0.300** [7.62]	**0.733** [18.62]	**0.8085** [20.54]	**0.600** [15.24]
37	**0.450** [11.43]	**1.085** [26.24]	**1.1085** [28.16]	**0.900** [22.86]
51	**0.625** [15.88]	**1.383** [35.13]	**1.4585** [37.05]	**1.250** [31.75]

Catalog 1308940
Revised 9-14

www.te.com

Dimensions are shown for reference purposes only. Specifications subject to change.

Dimensions are in millimeters unless otherwise specified.

USA: +1 800 522 6752
Asia Pacific: +86 0 400 820 6015
UK: +44 800 267 666

For additional support numbers please visit www.te.com

NANONICS Surface Mount Connectors — Vertical, Two Row

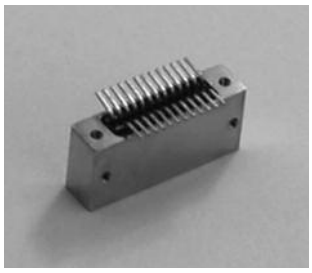

Receptacle

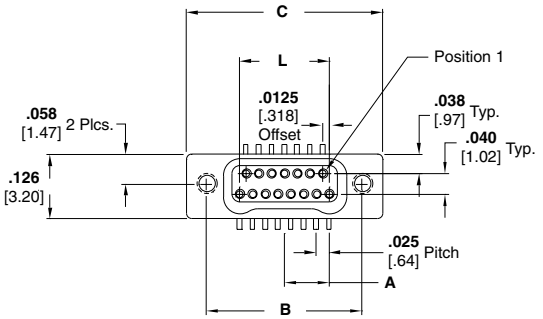

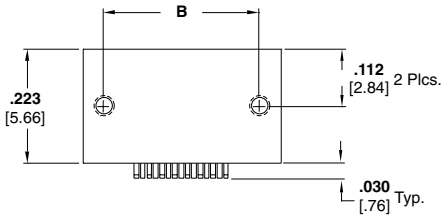

Receptacle Assembly
Drawing Number 1589484

Product Facts

- Plastic or Metal Shell
- Standard Sizes: 9, 15, 25, 37, 51 and 65
- Contact TE Connectivity for custom configurations
- Suggested pad layouts are available on the referenced drawings on the TE website

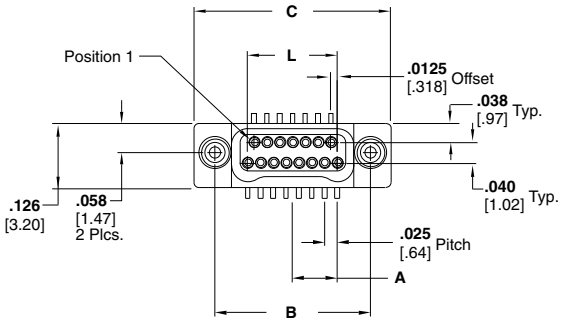

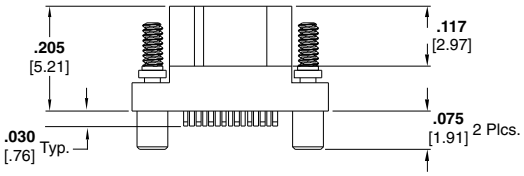

Plug Assembly
Drawing Number 1589485

Size	Dimensions			
	A	B	C	L
9	**0.050** [1.27]	**0.229** [5.82]	**0.3085** [7.84]	**0.100** [2.54]
15	**0.875** [2.23]	**0.304** [7.72]	**0.3835** [9.74]	**0.175** [4.45]
25	**0.150** [3.81]	**0.429** [10.90]	**0.5085** [12.92]	**0.300** [8.89]
37	**0.225** [5.72]	**0.579** [14.71]	**0.6585** [16.73]	**0.450** [11.43]
51	**0.313** [7.95]	**0.754** [19.15]	**0.8335** [21.17]	**0.625** [15.88]
65	**0.400** [10.16]	**0.929** [23.60]	**1.0085** [25.62]	**0.800** [20.32]

Dimensions are shown for reference purposes only. Specifications subject to change.

Dimensions are in millimeters unless otherwise specified.

USA: +1 800 522 6752
Asia Pacific: +86 0 400 820 6015
UK: +44 800 267 666

For additional support numbers please visit www.te.com

NANONICS Surface Mount Connectors — Vertical, Two Row with Integrated Standoffs

Product Facts

- **Metal Shell**
- **Standard Sizes: 9, 15, 25, 37, 51 and 65**
- **Contact TE Connectivity for custom configurations**
- **Suggested pad layouts are available on the referenced drawings on the TE website**

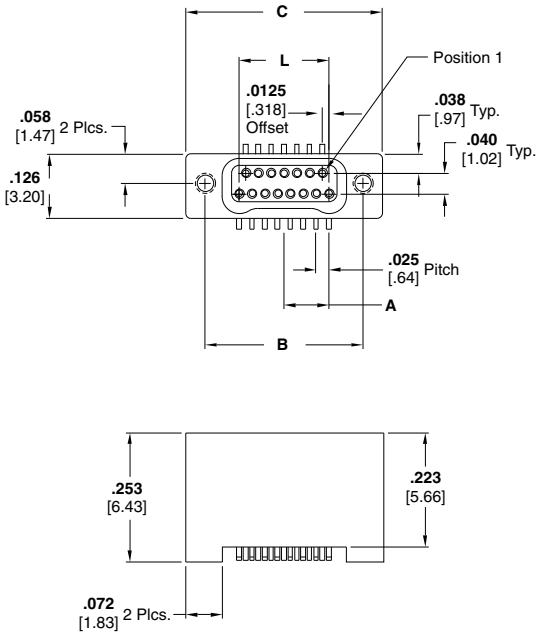

Receptacle Assembly
Drawing Number 1589486

Size	Dimensions			
	A	B	C	L
9	**0.050** [1.27]	**0.229** [5.82]	**0.3085** [7.84]	**.100** [2.54]
15	**0.875** [2.23]	**0.304** [7.72]	**0.3835** [9.74]	**.175** [4.45]
25	**0.150** [3.81]	**0.429** [10.90]	**0.5085** [12.92]	**.300** [8.89]
37	**0.225** [5.72]	**0.579** [14.71]	**0.6585** [16.73]	**.450** [11.43]
51	**0.313** [7.95]	**0.754** [19.15]	**0.8335** [21.17]	**.625** [15.88]
65	**0.400** [10.16]	**0.929** [23.60]	**1.0085** [25.62]	**.800** [20.32]

Catalog 1308940
Revised 9-14

www.te.com

Dimensions are shown for reference purposes only. Specifications subject to change.

Dimensions are in millimeters unless otherwise specified.

USA: +1 800 522 6752
Asia Pacific: +86 0 400 820 6015
UK: +44 800 267 666

For additional support numbers please visit www.te.com

NANONICS Thru-Hole Connectors — Horizontal, 1 Row to 2 Row, .050 Spacing

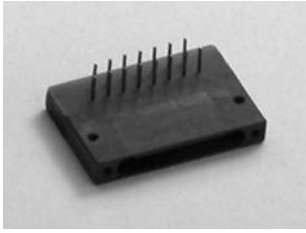

Receptacle

Product Facts

- Plastic or Metal Shell
- Standard Sizes: 5, 9, 15, 25, 37, and 51
- Contact TE Connectivity for custom configurations
- Suggested thru-hole layouts are available on the referenced drawings on the TE website

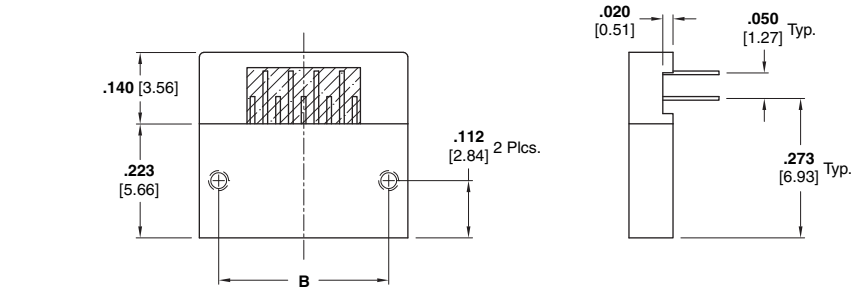

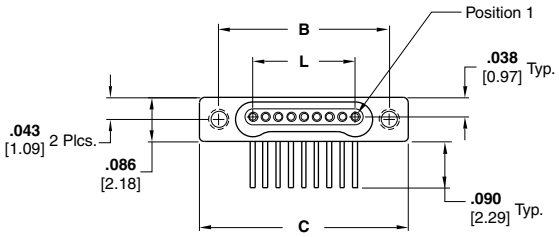

Receptacle Assembly
Drawing Number 1589469

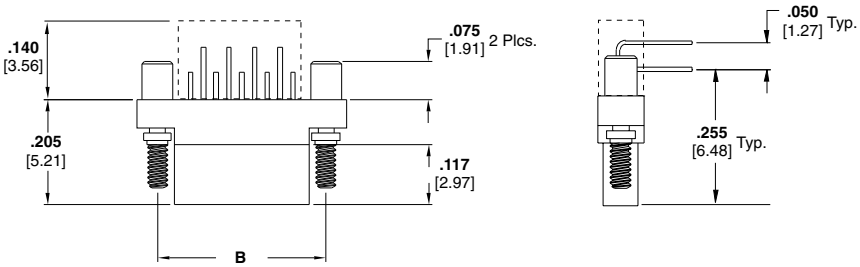

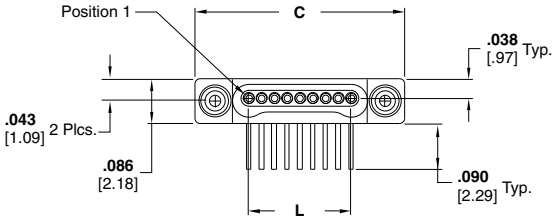

Plug Assembly
Drawing Number 1589471

Size	Dimensions		
	B	C	L
5	**0.233** [5.92]	**0.3085** [7.84]	**0.100** [2.54]
9	**0.333** [8.46]	**0.4085** [10.38]	**0.200** [5.08]
15	**0.483** [12.27]	**0.5585** [14.19]	**0.350** [8.89]
25	**0.733** [18.62]	**0.8085** [20.54]	**0.600** [15.24]
37	**1.033** [26.24]	**1.1085** [28.16]	**0.900** [22.86]
51	**1.383** [35.13]	**1.4585** [37.05]	**1.250** [31.75]

Dimensions are shown for reference purposes only. Specifications subject to change.

Dimensions are in millimeters unless otherwise specified.

USA: +1 800 522 6752
Asia Pacific: +86 0 400 820 6015
UK: +44 800 267 666

For additional support numbers please visit www.te.com

NANONICS Thru-Hole Connectors — Horizontal, 2 Row to 4 Row, .050 Spacing

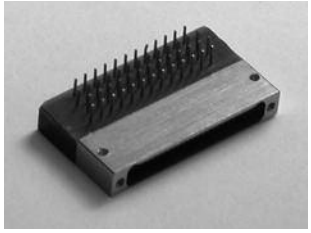

Receptacle

Product Facts

- Plastic or Metal Shell
- Standard Sizes: 9, 15, 25, 37, 51 and 65
- Contact TE Connectivity for custom configurations
- Suggested thru-hole layouts are available on the referenced drawings on the TE website

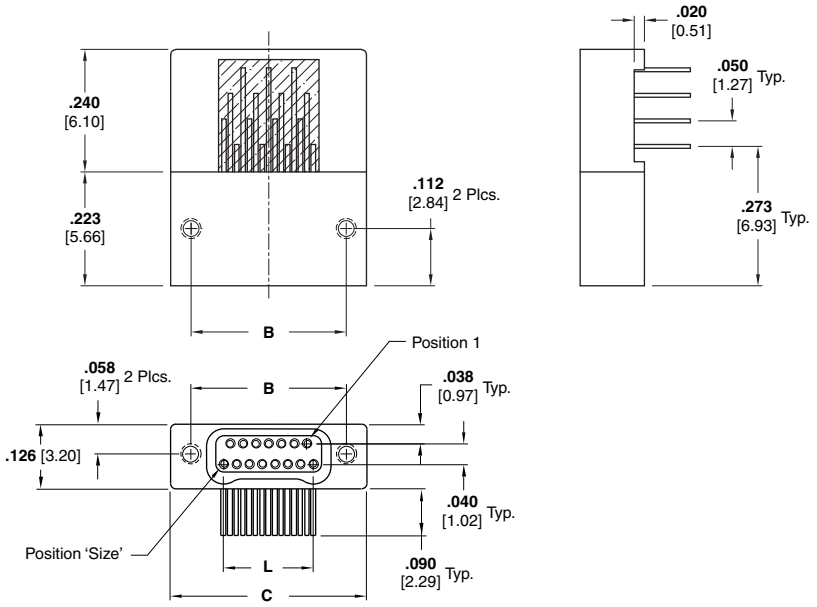

Receptacle Assembly
Drawing Number 1589487

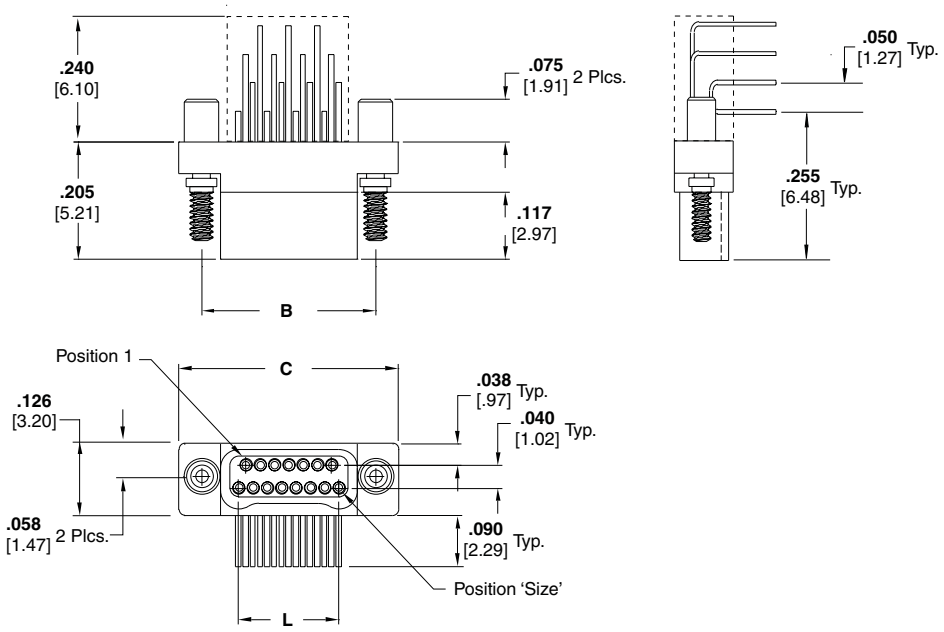

Plug Assembly
Drawing Number 1589481

Size	Dimensions		
	B	C	L
9	**0.229** [5.82]	**0.3085** [7.84]	**0.100** [2.54]
15	**0.304** [7.72]	**0.3835** [9.74]	**0.175** [4.45]
25	**0.429** [10.90]	**0.5085** [12.92]	**0.300** [7.62]
37	**0.579** [14.71]	**0.6585** [16.73]	**0.450** [11.43]
51	**0.754** [19.15]	**0.8335** [21.17]	**0.625** [15.88]
65	**0.929** [23.60]	**1.0085** [25.62]	**0.800** [20.32]

Catalog 1308940
Revised 9-14

www.te.com

Dimensions are shown for reference purposes only. Specifications subject to change.

Dimensions are in millimeters unless otherwise specified.

USA: +1 800 522 6752
Asia Pacific: +86 0 400 820 6015
UK: +44 800 267 666

For additional support numbers please visit www.te.com

NANONICS Thru-Hole Connectors — Vertical Mount, 1 Row to 2 Row Connectors, .050 Spacing

Receptacle

Product Facts

- Plastic or Metal Shell
- Standard Sizes: 5, 9, 15, 25, 37 and 51
- Contact TE Connectivity for custom configurations
- Suggested thru-hole layouts are available on the referenced drawings on the TE website

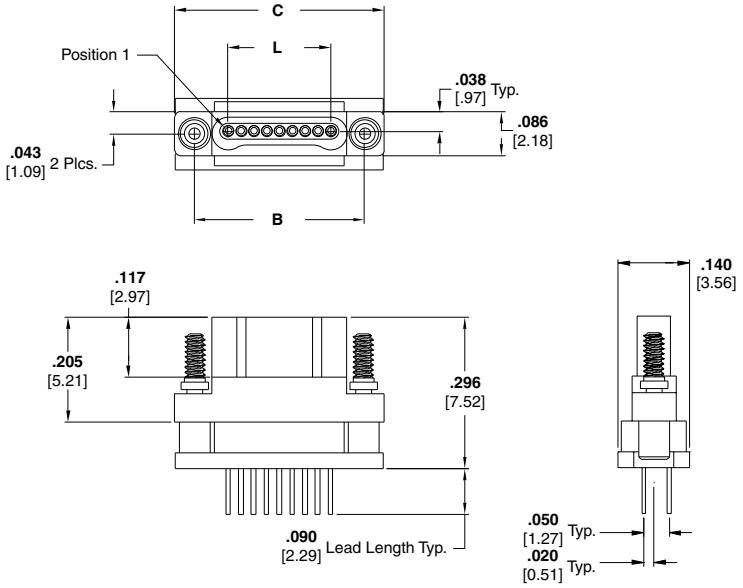

Plug Assembly
Drawing Number 1589461

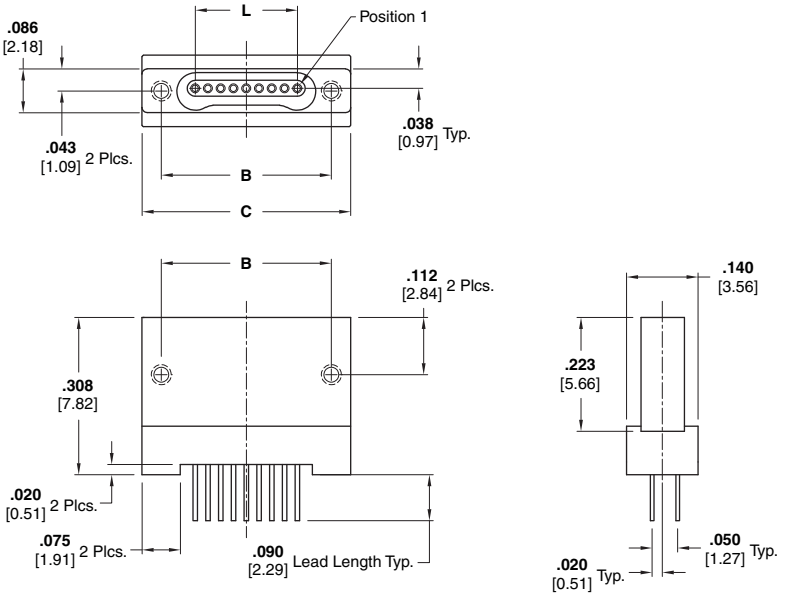

Receptacle Assembly
Drawing Number 1589470

Size	Dimensions		
	B	C	L
5	**0.233** [5.92]	**0.3085** [7.84]	**0.100** [2.54]
9	**0.333** [8.46]	**0.4085** [10.38]	**0.200** [5.08]
15	**0.483** [12.27]	**0.5585** [14.19]	**0.350** [8.89]
25	**0.733** [18.62]	**0.8085** [20.54]	**0.600** [15.24]
37	**1.033** [26.24]	**1.1085** [28.16]	**0.900** [22.86]
51	**1.383** [35.13]	**1.4585** [37.05]	**1.250** [31.75]

Catalog 1308940
Revised 9-14

www.te.com

Dimensions are shown for reference purposes only. Specifications subject to change.

Dimensions are in millimeters unless otherwise specified.

USA: +1 800 522 6752
Asia Pacific: +86 0 400 820 6015
UK: +44 800 267 666

For additional support numbers please visit www.te.com

NANONICS Thru-Hole Connectors — Vertical Mount, 2 Row to 4 Row Connectors, .050 Spacing

Receptacle

Product Facts

- Plastic or Metal Shell
- Standard Sizes: 9, 15, 25, 37, 51 and 65
- Contact TE Connectivity for custom configurations
- Suggested thru-hole layouts are available on the referenced drawings on the TE website

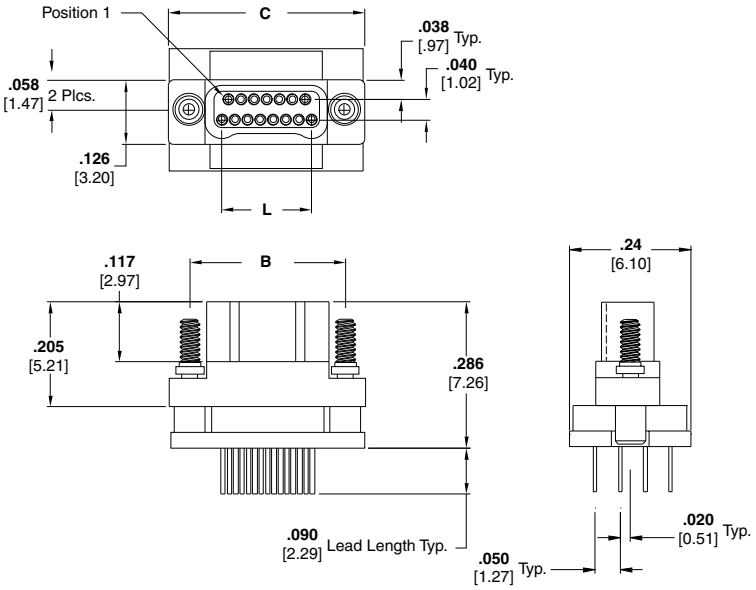

Plug Assembly
Drawing Number 1589482

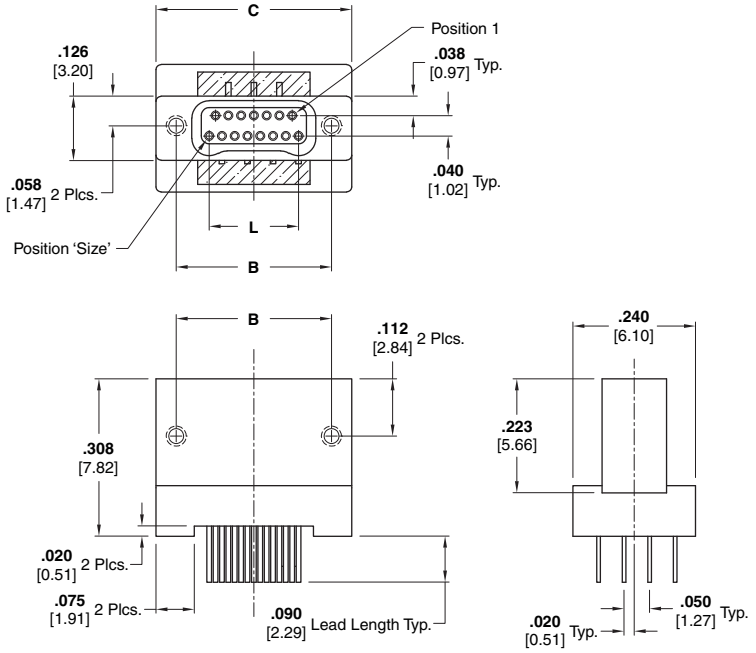

Receptacle Assembly
Drawing Number 1589488

Size	Dimensions		
	B	C	L
9	**0.229** [5.82]	**0.3085** [7.84]	**0.100** [2.54]
15	**0.304** [7.72]	**0.3835** [9.74]	**0.175** [4.45]
25	**0.429** [10.90]	**0.5085** [12.92]	**0.300** [7.62]
37	**0.579** [14.71]	**0.6585** [16.73]	**0.450** [11.43]
51	**0.754** [19.15]	**0.8335** [21.17]	**0.625** [15.88]
65	**0.929** [23.60]	**1.0085** [25.62]	**0.800** [20.32]

Catalog 1308940
Revised 9-14

www.te.com

Dimensions are shown for reference purposes only. Specifications subject to change.

Dimensions are in millimeters unless otherwise specified.

USA: +1 800 522 6752
Asia Pacific: +86 0 400 820 6015
UK: +44 800 267 666

For additional support numbers please visit www.te.com

Part Numbering Guideline for NANONICS Surface Mount and Thru-Hole Connectors

DUALOBE Connectors - Surface Mount and Thru-Hole Terminations

S X X XXX XX(X) X X

Class

S DUALOBE

Rows

S 1 Row
T 2 Row

Type

L LCP (Plastic)
M Metal (Al, Ni Plate)

Positions

005 5 Position (single row only)
009 9 Position
015 15 Position
025 25 Position
037 37 Position
051 51 Position
065 65 Position (two row only)

Threads/Jackscrew

Threads (Receptacles Only)	Jackscrews (Plugs Only)
N Thread for 1.0 mm Jackscrews	**M** 1.0 mm Non Captive Jackscrews
Q Thread for 1.2 mm Jackscrews	**N** 1.0 mm Captive Jackscrews
	Q 1.2 mm Captive Jackscrews

Mounting Hardware

A 1.2 mm x .160"	**K** 1.0 mm x .200" w/ 4 standoffs
C 1.0 mm x .200" w/ 2 standoffs	**L** 1.2 mm x .200" w/ 2 standoffs
D 1.2 mm x .160" w/ 2 standoffs	**P** 1.2 mm x .200" w/ 4 standoffs
H 1.0 mm x .160"	**S** 1.0 mm x .160" w/ 2 standoffs
I 1.2 mm x .200"	

Configurations

B2 Plug, Horizontal SMT
B4 Plug, Vertical SMT
B42 Plug, Vertical SMT, .020" Extended Leads
B44 Plug, Vertical SMT, .040" Extended Leads
B43 Plug, Vertical SMT, .020" Extended Leads, 2 side exit (single row only)
B45 Plug, Vertical SMT, .040" Extended Leads, 2 side exit (single row only)
L2 Receptacle, Horizontal SMT
L4 Receptacle, Vertical SMT
L42 Receptacle, Vertical SMT, .020" Extended Leads
L44 Receptacle, Vertical SMT, .040" Extended Leads
L43 Receptacle, Vertical SMT, .020" Extended Leads, 2 side exit (single row only)
L45 Receptacle, Vertical SMT, .040" Extended Leads, 2 side exit (single row only)
L8 Receptacle, Vertical SMT, w/ integrated standoffs (metal shell only)
L82 Receptacle, Vertical SMT, w/ integrated standoffs, .020" Extended Leads (metal shell only)
L84 Receptacle, Vertical SMT, w/ integrated standoffs, .040" Extended Leads (metal shell only)
L83 Receptacle, Vertical SMT, w/ integrated standoffs, .020" Extended Leads (single row and metal shell only)
L85 Receptacle, Vertical SMT, w/ integrated standoffs, .040" Extended Leads (single row and metal shell only)
C5 Plug, Vertical Mount, Thru-Hole
C6 Plug, Horizontal Mount, Thru-Hole
M5 Receptacle, Vertical Mount, Thru-Hole
M6 Receptacle, Horizontal Mount, Thru-Hole

Dimensions are shown for reference purposes only. Specifications subject to change.

Dimensions are in millimeters unless otherwise specified.

USA: +1 800 522 6752
Asia Pacific: +86 0 400 820 6015
UK: +44 800 267 666

For additional support numbers please visit www.te.com

NANONICS Flex Termination "Duckbill" Connectors — Two Row

Product Facts

- Plastic or Metal Shell
- Standard Sizes: 9, 15, 25, 37, 51 and 65
- Contact TE Connectivity for custom configurations

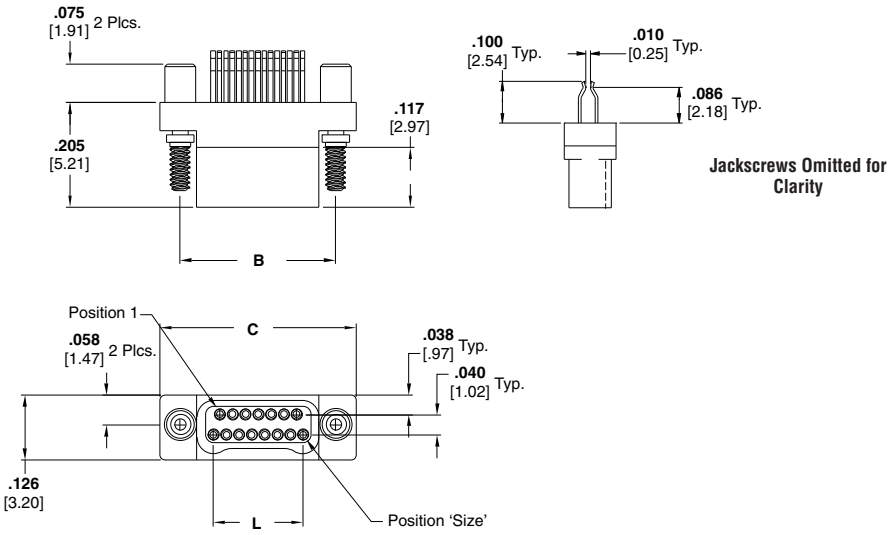

Plug Assembly
Drawing Number 1589066

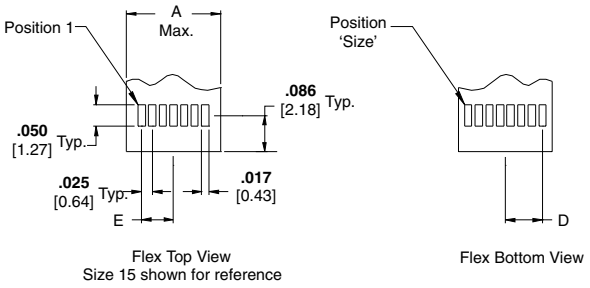

Typical Flex Pad Layout

Size	Dimensions					
	A	B	C	D	E	L
9	**0.150** [3.81]	**0.229** [5.82]	**0.3085** [7.84]	**0.0500** [1.27]	**0.0375** [0.95]	**0.100** [2.54]
15	**0.225** [5.72]	**0.304** [7.72]	**0.3835** [9.74]	**0.0875** [2.22]	**0.0750** [1.90]	**0.175** [4.45]
25	**0.350** [8.89]	**0.429** [10.90]	**0.5085** [12.92]	**0.1500** [3.81]	**0.1375** [3.49]	**0.300** [7.62]
37	**0.500** [12.7]	**0.579** [14.71]	**0.6585** [16.73]	**0.2250** [5.72]	**0.2125** [5.40]	**0.450** [11.43]
51	**0.675** [17.1]	**0.754** [19.15]	**0.8335** [21.17]	**0.3125** [7.94]	**0.3000** [7.62]	**0.625** [15.88]
65	**0.850** [21.6]	**0.929** [23.60]	**1.0085** [25.62]	**0.4000** [10.2]	**0.3875** [9.84]	**0.800** [20.32]

Catalog 1308940
Revised 9-14

www.te.com

Dimensions are shown for reference purposes only. Specifications subject to change.

Dimensions are in millimeters unless otherwise specified.

USA: +1 800 522 6752
Asia Pacific: +86 0 400 820 6015
UK: +44 800 267 666

For additional support numbers please visit www.te.com

NANONICS Flex Termination "Duckbill" Connectors — Two Row (Continued)

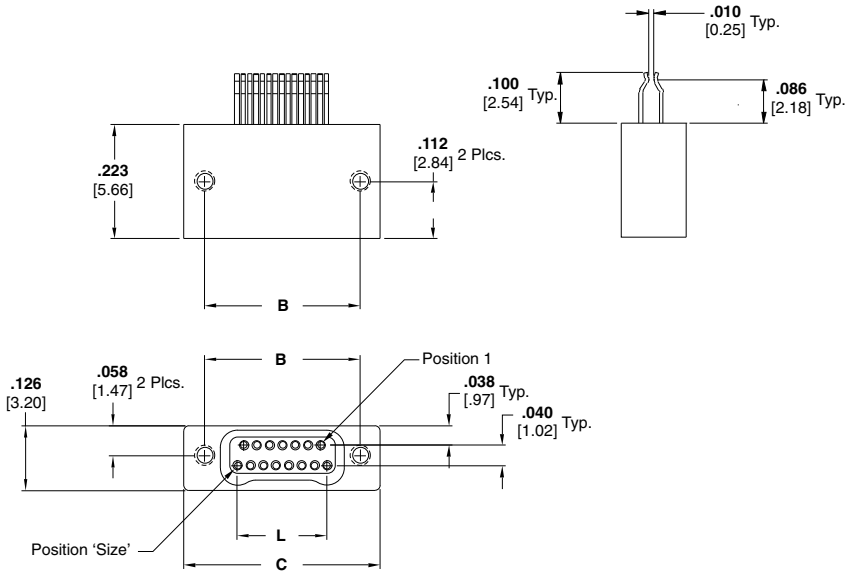

Receptacle Assembly
Drawing Number 1589067

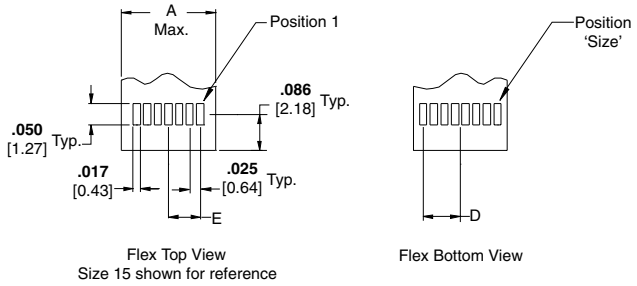

Typical Flex Pad Layout

Part Numbering Guideline for NANONICS Flex Termination "Duckbill" Connectors

DUALOBE Connectors - "Duckbill" Termination

S T X XXX 11378 XX X

Class
- **S** DUALOBE

Rows
- **T** 2 Row

Type
- **L** LCP (Plastic)
- **M** Metal (Al, Ni Plate)

Positions
- **009** 9 Position
- **015** 15 Position
- **025** 25 Position
- **037** 37 Position
- **051** 51 Position
- **065** 65 Position

Termination Code
- **11378** "Duckbill" Termination

Configuration
- **PC** Plug
- **SC** Receptacle

Threads/Jackscrew

Threads (Receptacles Only)	Jackscrews (Plugs Only)
N Thread for 1.0 mm Jackscrews	**M** 1.0 mm Non Captive Jackscrews
Q Thread for 1.2 mm Jackscrews	**N** 1.0 mm Captive Jackscrews
	Q 1.2 mm Captive Jackscrews

Catalog 1308940
Revised 9-14

www.te.com

Dimensions are shown for reference purposes only. Specifications subject to change.

Dimensions are in millimeters unless otherwise specified.

USA: +1 800 522 6752
Asia Pacific: +86 0 400 820 6015
UK: +44 800 267 666

For additional support numbers please visit www.te.com

NANONICS Solder Cup Connectors — Single Row

Product Facts

- **Plastic or Metal Shell**
- **Standard Sizes: 5, 9, 15, 25, 37 and 51**
- **Contact TE Connectivity for custom configurations**

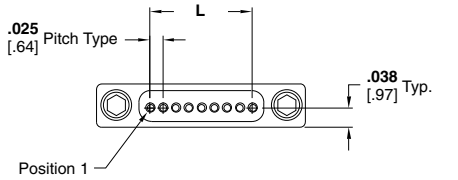

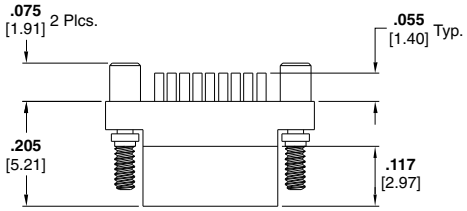

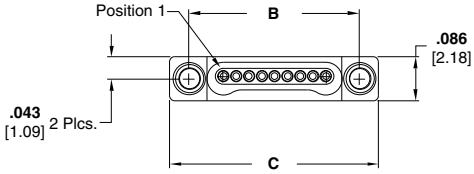

Plug Assembly
Drawing Number 1589051

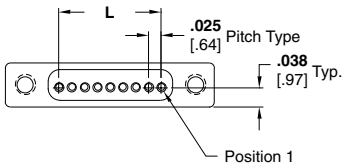

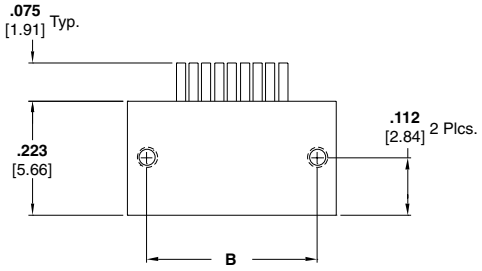

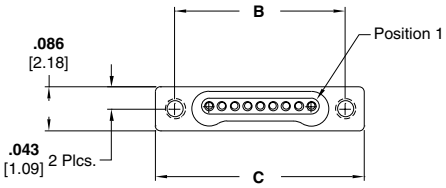

Receptacle Assembly
Drawing Number 1589052

Size	Dimensions		
	B	C	L
5	**0.233** [5.92]	**0.3085** [7.84]	**0.100** [2.54]
9	**0.333** [8.46]	**0.4085** [10.38]	**0.200** [5.08]
15	**0.483** [12.27]	**0.5585** [14.19]	**0.350** [8.89]
25	**0.733** [18.62]	**0.8085** [20.54]	**0.600** [15.24]
37	**1.033** [26.24]	**1.1085** [28.16]	**0.900** [22.86]
51	**1.383** [35.13]	**1.4585** [37.05]	**1.250** [31.75]

Catalog 1308940
Revised 9-14

www.te.com

Dimensions are shown for reference purposes only. Specifications subject to change.

Dimensions are in millimeters unless otherwise specified.

USA: +1 800 522 6752
Asia Pacific: +86 0 400 820 6015
UK: +44 800 267 666

For additional support numbers please visit www.te.com

NANONICS Solder Cup Connectors — Two Row

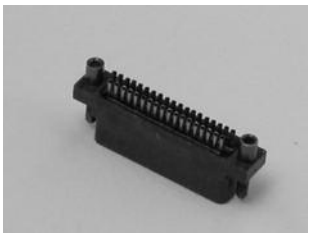

Plug

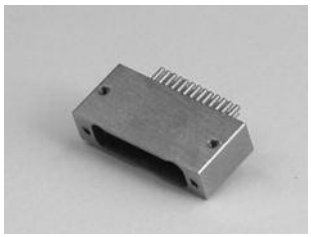

Receptacle

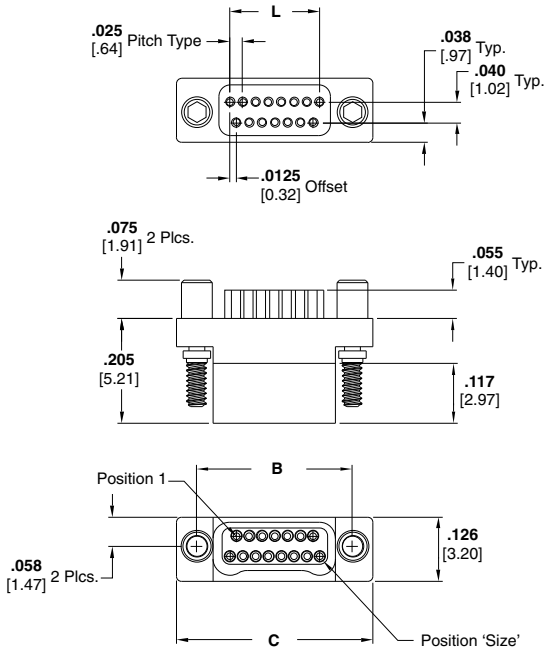

Plug Assembly
Drawing Number 1589053

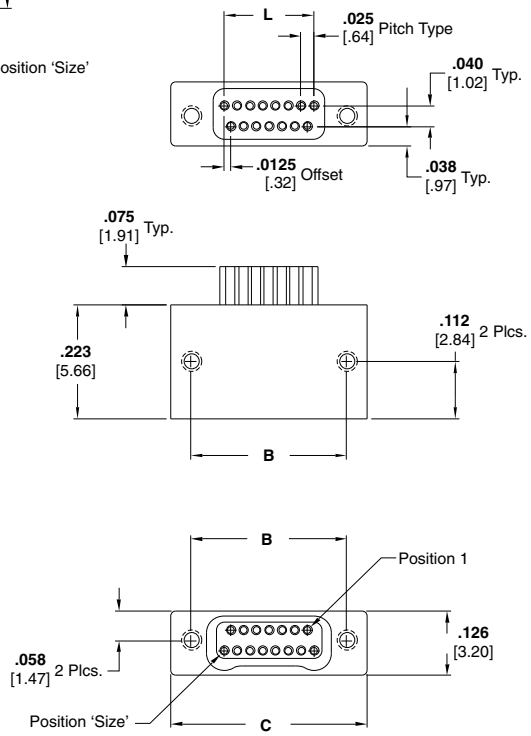

Receptacle Assembly
Drawing Number 1589054

Product Facts

- **Plastic or Metal Shell**
- **Standard Sizes: 9, 15, 25, 37, 51 and 65**
- **Contact TE Connectivity for custom configurations**

Size	Dimensions		
	B	C	L
9	**0.229** [5.82]	**0.3085** [7.84]	**0.100** [2.54]
15	**0.304** [7.72]	**0.3835** [9.74]	**0.175** [4.45]
25	**0.429** [10.90]	**0.5085** [12.92]	**0.300** [7.62]
37	**0.579** [14.71]	**0.6585** [16.73]	**0.450** [11.43]
51	**0.754** [19.15]	**0.8335** [21.17]	**0.625** [15.88]
65	**0.929** [23.60]	**1.0085** [25.62]	**0.800** [20.32]

Catalog 1308940
Revised 9-14

www.te.com

Dimensions are shown for reference purposes only. Specifications subject to change.

Dimensions are in millimeters unless otherwise specified.

USA: +1 800 522 6752
Asia Pacific: +86 0 400 820 6015
UK: +44 800 267 666

For additional support numbers please visit www.te.com

Part Numbering Guideline for NANONICS Solder Cup Connectors

DUALOBE Connectors - Solder Cup Termination

S X X XXX 11500 XX X

Class

S DUALOBE

Rows

S 1 Row

T 2 Row

Type

L LCP (Plastic)

M Metal (Al, Ni Plate)

Positions

005 5 Position (single row only)

009 9 Position

015 15 Position

025 25 Position

037 37 Position

051 51 Position

065 65 Position (two row only)

Termination Code

11500 Solder Cup Termination

Configuration

PC Plug

SC Receptacle

Threads/Jackscrew

Threads (Receptacles Only)

N Thread for 1.0 mm Jackscrews

Q Thread for 1.2 mm Jackscrews

Jackscrews (Plugs Only)

M 1.0 mm Non Captive Jackscrews

N 1.0 mm Captive Jackscrews

Q 1.2 mm Captive Jackscrews

Dimensions are shown for reference purposes only. Specifications subject to change.

Dimensions are in millimeters unless otherwise specified.

USA: +1 800 522 6752
Asia Pacific: +86 0 400 820 6015
UK: +44 800 267 666

For additional support numbers please visit www.te.com

NANONICS Panel Mount Connectors — Single Row, Flying Leads

Product Facts

- **Metal Shell**
- **Standard Sizes: 5, 9, 15, 25, 37 and 51**
- **Factory wired to your specifications**
- **Contact TE Connectivity for custom configurations**

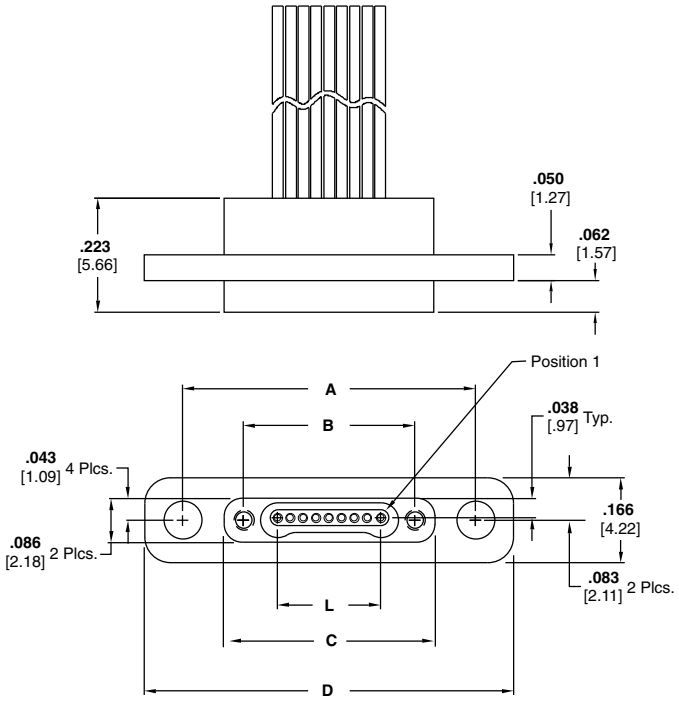

Receptacle Assembly
Drawing Number 1589851

Size	Dimensions				
	A	B	C	D	L
5	**0.470** [11.94]	**0.233** [5.92]	**0.310** [7.87]	**0.620** [15.75]	**0.100** [2.54]
9	**0.570** [14.48]	**0.333** [8.46]	**0.410** [10.41]	**0.720** [18.29]	**0.200** [5.08]
15	**0.720** [18.29]	**0.483** [12.27]	**0.560** [14.22]	**0.870** [22.10]	**0.350** [8.89]
25	**0.970** [24.64]	**0.733** [18.62]	**0.810** [20.57]	**1.120** [28.45]	**0.600** [15.24]
37	**1.270** [32.26]	**1.033** [26.24]	**1.110** [28.19]	**1.420** [36.07]	**0.900** [22.86]
51	**1.620** [14.15]	**1.383** [35.13]	**1.460** [37.08]	**1.770** [44.96]	**1.250** [31.75]

Catalog 1308940
Revised 9-14

www.te.com

Dimensions are shown for reference purposes only. Specifications subject to change.

Dimensions are in millimeters unless otherwise specified.

USA: +1 800 522 6752
Asia Pacific: +86 0 400 820 6015
UK: +44 800 267 666

For additional support numbers please visit www.te.com

NANONICS Panel Mount Connectors — Two Row, Flying Leads

Receptacle

Product Facts

- Metal Shell
- Standard Sizes: 9, 15, 25, 37, 51 and 65
- Contact TE Connectivity for custom configurations

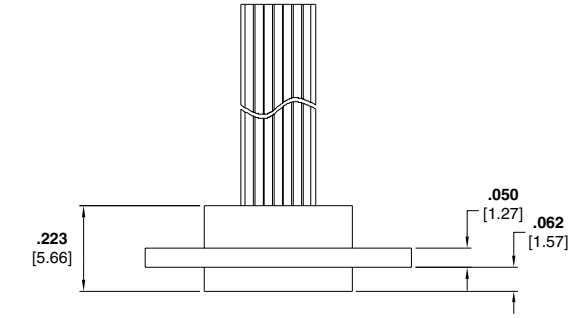

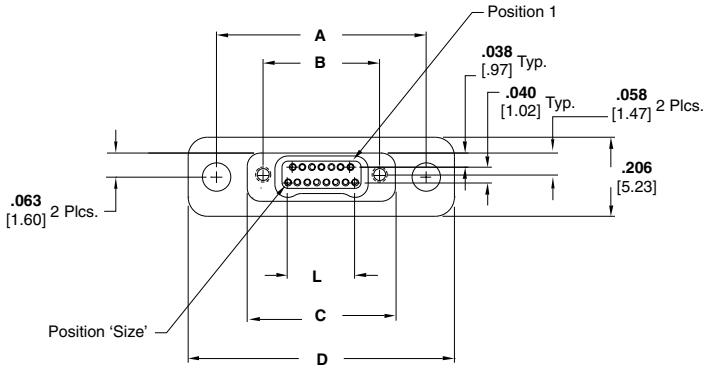

Receptacle Assembly
Drawing Number 1589050

Size	Dimensions				
	A	B	C	D	L
9	**0.470** [11.94]	**0.229** [5.82]	**0.310** [7.87]	**0.620** [15.75]	**0.100** [2.54]
15	**0.545** [13.84]	**0.304** [7.72]	**0.385** [9.78]	**0.695** [17.65]	**0.175** [4.45]
25	**0.670** [17.02]	**0.429** [10.90]	**0.510** [12.95]	**0.820** [20.83]	**0.300** [7.62]
37	**0.820** [20.83]	**0.579** [14.71]	**0.660** [16.76]	**0.970** [24.64]	**0.450** [11.43]
51	**0.995** [25.27]	**0.754** [19.15]	**0.835** [21.21]	**1.145** [29.08]	**0.625** [15.88]
65	**1.170** [20.72]	**0.929** [23.60]	**1.010** [25.65]	**1.320** [33.53]	**0.800** [20.32]

Catalog 1308940
Revised 9-14

www.te.com

Dimensions are shown for reference purposes only. Specifications subject to change.

Dimensions are in millimeters unless otherwise specified.

USA: +1 800 522 6752
Asia Pacific: +86 0 400 820 6015
UK: +44 800 267 666

For additional support numbers please visit www.te.com

Part Numbering Guideline for NANONICS Panel Mount Connectors

DUALOBE Connectors - Panel Mount

P X M XXX SC X XX XXX X

Class

P Panel Mount

Rows

S 1 Row

T 2 Row

Type

M Metal (Al, Ni Plate)

Positions

005 5 Position (single row only)

009 9 Position

015 15 Position

025 25 Position

037 37 Position

051 51 Position

065 65 Position (two row only)

Configuration

SC Receptacle

Conductor Size/Strands

0 28 AWG Solid

1 30 AWG Solid

2 30 AWG 7 Strand

3 32 AWG 7 Strand

4 34 AWG 7 Strand

Conductor Type

DX White PTFE

DC Color Coded PTFE

DM Color Coded PTFE per MIL-STD-681

DT White ETFE per M22759/33

GX FEP Ribbon Cable

Conductor Length

XXX Three numbers only, length is in inches (i.e. 012 = twelve inches)

CXX A “C” follwed by two numbers, length is in centimeters (i.e. C06 = 6 centimeters)

MXX An “M” followed by two numbers, length is in meters (i.e. M02 = 2 meters)

Jackscrew Threads

Threads

N Thread for 1.0 mm Jackscrews

Q Thread for 1.2 mm Jackscrews

Dimensions are shown for reference purposes only. Specifications subject to change.

Dimensions are in millimeters unless otherwise specified.

USA: +1 800 522 6752
Asia Pacific: +86 0 400 820 6015
UK: +44 800 267 666

For additional support numbers please visit www.te.com

Part Number Index Cross Reference

NANONICS Part Number	TE Part Number
Wired Connectors	
SSL005PC0DC006N	0-1589455-2
SSL005PC0DC012N	0-1589455-3
SSL005PC0DX012M	7-1589456-3
SSL005PC2DC002N	2-1589827-7
SSL005PC2DC004	0-1589455-4
SSL005PC2DC006	0-1589455-5
SSL005PC2DC006N	0-1589455-6
SSL005PC2DC012N	6-1589456-4
SSL005PC2DX006N	0-1589455-7
SSL005SC0DC006N	0-1589457-1
SSL005SC2DC006N	0-1589457-2
SSL005SC2DC012N	7-1589457-6
SSL005SC3DM024N	0-1589457-3
SSL009PC0DC006N	0-1589455-8
SSL009PC0DMM03N	0-1589455-9
SSL009PC0DX012M	7-1589456-4
SSL009PC2DC001N	1-1589455-0
SSL009PC2DC003	1-1589455-1
SSL009PC2DC006N	1-1589455-2
SSL009PC2DC009N	1-1589455-3
SSL009PC2DC012	1-1589455-4
SSL009PC2DC012M	1-1589455-5
SSL009PC2DC012N	1-1589455-6
SSL009PC2DC012Q	9-1589456-2
SSL009PC2DC018N	1-1589455-7
SSL009PC2DC024N	7-1589456-9
SSL009PC2DCC03N	1-1589455-8
SSL009PC2DCC10N	1-1589455-9
SSL009PC2DM010N	2-1589455-0
SSL009PC2DM018M	2-1589455-1
SSL009PC2DMC60Q	2-1589455-2
SSL009SC0DMM03N	0-1589457-4
SSL009SC2DC003	0-1589457-5
SSL009SC2DC006N	0-1589457-6
SSL009SC2DC012	0-1589457-7
SSL009SC2DC012Q	9-1589457-2
SSL009SC2DM006N	0-1589457-8
SSL009SC2GX006	1-1589457-0
SSL015PC0DC012N	0-1589827-6
SSL015PC0DMM03N	2-1589455-3
SSL015PC0DX012M	7-1589456-5
SSL015PC2DC003N	0-1589827-3
SSL015PC2DC006N	2-1589455-4
SSL015PC2DC008N	2-1589455-5
SSL015PC2DC012	2-1589455-6
SSL015PC2DC012M	0-1589827-2
SSL015PC2DC012N	2-1589455-7
SSL015PC2DC016N	0-1589827-8
SSL015PC2DC018	2-1589455-8
SSL015PC2DC018N	1-1589827-1
SSL015PC2DC024	2-1589455-9
SSL015PC2DC024M	7-1589456-2
SSL015PC2DC024N	0-1589827-9
SSL015PC2DC036N	0-1589827-5
SSL015PC2DM018M	3-1589455-0
SSL015SC0DMM03N	1-1589457-1
SSL015SC2DC005N	9-1589457-6
SSL015SC2DC006N	1-1589457-2
SSL015SC2DC012N	1-1589457-3
SSL015SC2DC024N	1-1589457-4
SSL015SC2DC036N	8-1589457-9
SSL025PC0DC012M	8-1589456-5
SSL025PC2DC006	3-1589455-1
SSL025PC2DC006N	3-1589455-2
SSL025PC2DC012	3-1589455-3
SSL025PC2DC018N	9-1589456-6
SSL025PC2DC020N	3-1589455-4
SSL025PC2DC024M	0-1589827-1
SSL025PC2DC024N	7-1589456-8
SSL025PC2DM018M	3-1589455-5
SSL025PC2DX012Q	3-1589455-6
SSL025PC2GX006N	3-1589455-7
SSL025SC0DC012N	8-1589457-5
SSL025SC2DC006	1-1589457-5
SSL025SC2DC006N	1-1589457-6
SSL025SC2DC012N	1-1589457-7
SSL025SC2DC036N	8-1589457-8
SSL037PC2DC012N	3-1589455-8
SSL037PC2DC018N	8-1589456-0
SSL037PC2DC024N	3-1589455-9
SSL037PC2DC096N	4-1589455-0
SSL037SC2DC012N	1-1589457-8
SSL051PC0DX012M	7-1589456-6
SSL051PC2DC012N	4-1589455-1
SSM005PC0DC024N	2-1589827-2
SSM005PC0DC036N	7-1589456-0
SSM005PC0DX024N	8-1589456-9
SSM005PC2DC006	4-1589455-2
SSM005PC2DC006N	4-1589455-3
SSM005PC2DC012M	7-1589456-1
SSM005PC2DC012N	4-1589455-4
SSM005PC2DC012Q	6-1589456-3
SSM005PC2DC018N	4-1589455-5
SSM005PC2DC036N	4-1589455-6
SSM005PC2DC040N	4-1589455-7
SSM005PC2DCC20N	9-1589456-7
SSM005PC2DT012N	1-1589827-6
SSM005PC2DX012N	4-1589455-8
SSM005PC2DX018N	4-1589455-9
SSM005PC2DX024N	5-1589455-0
SSM005PC4DX012N	5-1589455-1
SSM005PC4DXM01	5-1589455-2
SSM005SC0DC024N	0-1589901-5
SSM005SC0DC036N	8-1589457-0
SSM005SC0DX024N	9-1589457-0
SSM005SC2DC006N	1-1589457-9
SSM005SC2DC012N	2-1589457-0
SSM005SC2DC012Q	7-1589457-4
SSM005SC2DC018N	2-1589457-1
SSM005SC2DC040N	2-1589457-2
SSM005SC2DT012N	9-1589457-7
SSM005SC2DX024HN	2-1589457-3
SSM005SC4DX012N	2-1589457-4
SSM009PC0DC012N	0-1589827-7
SSM009PC0DC024N	5-1589455-3
SSM009PC0DM024N	5-1589455-4
SSM009PC0DX012N	5-1589455-5
SSM009PC2DC003	5-1589455-6
SSM009PC2DC003N	5-1589455-7
SSM009PC2DC006	5-1589455-8
SSM009PC2DC006N	5-1589455-9
SSM009PC2DC010N	6-1589455-0
SSM009PC2DC012	6-1589455-1
SSM009PC2DC012M	6-1589455-2
SSM009PC2DC012N	6-1589455-3
SSM009PC2DC018	6-1589455-4
SSM009PC2DC018N	6-1589455-5
SSM009PC2DC024	6-1589455-6
SSM009PC2DC024N	6-1589455-7
SSM009PC2DC036N	6-1589455-8
SSM009PC2DC060N	6-1589455-9
SSM009PC2DC084N	8-1589456-8
SSM009PC2DCC10N	7-1589455-0
SSM009PC2DCM01N	7-1589455-1
SSM009PC2DCM02N	8-1589456-7
SSM009PC2DM010N	7-1589455-2
SSM009PC2DM018N	7-1589455-3
SSM009PC2DM024	7-1589455-4
SSM009PC2DM024N	6-1589456-5
SSM009PC2DT012N	1-1589827-7
SSM009PC2DT024N	1-1589827-0
SSM009PC2DX005N	7-1589455-5
SSM009PC2DX006N	7-1589455-6
SSM009PC2DX010N	7-1589455-7
SSM009PC2DX012N	7-1589455-8
SSM009PC2DX018N	7-1589455-9
SSM009PC2DX024N	8-1589455-0
SSM009PC2DY006N	8-1589455-1
SSM009PC3DC018N	8-1589455-2
SSM009SC0DC024N	0-1589901-6
SSM009SC1DC002	2-1589457-5
SSM009SC2DC006HN	2-1589457-6
SSM009SC2DC006N	2-1589457-7
SSM009SC2DC012N	2-1589457-9
SSM009SC2DC018N	3-1589457-0
SSM009SC2DC024N	3-1589457-1
SSM009SC2DC036N	3-1589457-2
SSM009SC2DC060N	8-1589457-3
SSM009SC2DC084N	8-1589457-7
SSM009SC2DM006N	3-1589457-4
SSM009SC2DM012	3-1589457-5
SSM009SC2DT012N	9-1589457-8
SSM009SC2DX012N	3-1589457-6
SSM009SC2DX018N	3-1589457-7
SSM009SC2DX024HN	3-1589457-8
SSM009SC2DX036HN	3-1589457-9
SSM015PC0DC012N	8-1589455-3
SSM015PC0DC018N	8-1589455-4
SSM015PC0DC024N	2-1589827-3
SSM015PC0DMM02N	8-1589455-5
SSM015PC2DC003N	8-1589455-6
SSM015PC2DC006	8-1589455-7
SSM015PC2DC006N	8-1589455-8
SSM015PC2DC008N	8-1589455-9
SSM015PC2DC012	9-1589455-0
SSM015PC2DC012M	6-1589456-6
SSM015PC2DC012N	9-1589455-1
SSM015PC2DC018	9-1589455-2
SSM015PC2DC018N	9-1589455-3
SSM015PC2DC024	2-1589827-8
SSM015PC2DC024N	9-1589455-4
SSM015PC2DC036N	9-1589455-5
SSM015PC2DC048N	9-1589455-6
SSM015PC2DC060N	9-1589455-7
SSM015PC2DM012N	9-1589456-4
SSM015PC2DM024N	9-1589455-8
SSM015PC2DMC20N	9-1589455-9
SSM015PC2DMC30N	3-1589827-0
SSM015PC2DMM02N	0-1589456-1
SSM015PC2DT012N	0-1589456-2
SSM015PC2DX006N	0-1589456-3
SSM015PC2DX006Q	0-1589456-4
SSM015PC2DX008	0-1589456-5
SSM015PC2DX012N	0-1589456-6
SSM015PC2DX024N	0-1589456-7
SSM015PC2DY003N	0-1589456-8
SSM015PC2DY006N	0-1589456-9
SSM015PC2DY012N	1-1589456-0
SSM015PC2GX018N	1-1589456-1
SSM015PC4DX030N	1-1589456-2
SSM015SC0DC012N	4-1589457-0
SSM015SC0DC024N	0-1589901-7
SSM015SC2DC003N	4-1589457-1
SSM015SC2DC006N	4-1589457-2
SSM015SC2DC012N	4-1589457-3
SSM015SC2DC018	4-1589457-4
SSM015SC2DC018N	9-1589457-4
SSM015SC2DC024N	9-1589457-3
SSM015SC2DC036N	4-1589457-5
SSM015SC2DC048N	7-1589457-5
SSM015SC2DM024N	7-1589457-7
SSM015SC2DT012N	9-1589457-9
SSM015SC2DX006N	4-1589457-8
SSM015SC2DX012HN	4-1589457-9
SSM015SC2DX018N	5-1589457-0
SSM015SC2DX024HN	5-1589457-2
SSM015SC2DY012N	5-1589457-3
SSM015SC2DY018N	5-1589457-4
SSM015SC4DX005N	5-1589457-5
SSM025PC0DC024N	2-1589827-4
SSM025PC0DC036N	6-1589456-9
SSM025PC2DC003N	1-1589456-4
SSM025PC2DC006Q	1-1589456-5
SSM025PC2DC010N	1-1589456-6
SSM025PC2DC012	1-1589456-7
SSM025PC2DC012N	1-1589456-8
SSM025PC2DC012Q	8-1589456-1

Catalog 1308940
Revised 9-14

www.te.com

Dimensions are shown for reference purposes only. Specifications subject to change.

Dimensions are in millimeters unless otherwise specified.

USA: +1 800 522 6752
Asia Pacific: +86 0 400 820 6015
UK: +44 800 267 666

For additional support numbers please visit www.te.com

Part Number Index Cross Reference (Continued)

NANONICS Part Number	TE Part Number
SSM025PC2DC018	1-1589456-9
SSM025PC2DC018N	2-1589456-0
SSM025PC2DC024N	9-1589456-1
SSM025PC2DC025N	2-1589456-1
SSM025PC2DC030N	2-1589456-2
SSM025PC2DC036N	2-1589456-3
SSM025PC2DCC30N	2-1589456-4
SSM025PC2DCC50N	1-1589827-5
SSM025PC2DM018Q	9-1589456-9
SSM025PC2DM024N	8-1589456-3
SSM025PC2DT012N	1-1589827-8
SSM025PC2DX006N	2-1589456-5
SSM025PC2DX012N	2-1589456-6
SSM025PC2DX018N	2-1589456-7
SSM025PC2DX024N	2-1589456-8
SSM025PC2GX006	2-1589456-9
SSM025PC2GX018N	3-1589456-0
SSM025PC3DY006N	3-1589456-1
SSM025PC4DX015N	7-1589456-7
SSM025SC0DC024N	0-1589901-8
SSM025SC0DC036N	7-1589457-9
SSM025SC2DC006N	8-1589457-6
SSM025SC2DC012N	5-1589457-6
SSM025SC2DC018	5-1589457-7
SSM025SC2DC024N	5-1589457-9
SSM025SC2DT012N	0-1589901-1
SSM025SC2DX006N	6-1589457-0
SSM025SC2DX018N	6-1589457-1
SSM025SC2DX024HN	6-1589457-3
SSM025SC2DX024N	8-1589457-1
SSM025SC3DY006N	6-1589457-4
SSM037PC0DC006M	1-1589827-2
SSM037PC0DC009Q	2-1589827-9
SSM037PC0DC024N	2-1589827-5
SSM037PC0DC036N	6-1589456-8
SSM037PC2DC006	3-1589456-2
SSM037PC2DC006N	3-1589456-3
SSM037PC2DC012	3-1589456-4
SSM037PC2DC012N	3-1589456-5
SSM037PC2DC012Q	9-1589456-5
SSM037PC2DC015N	3-1589456-6
SSM037PC2DC018	3-1589456-7
SSM037PC2DC018M	1-1589827-3
SSM037PC2DC018N	3-1589456-8
SSM037PC2DC024N	3-1589456-9
SSM037PC2DCM01N	4-1589456-0
SSM037PC2DM024N	8-1589456-4
SSM037PC2DT012N	1-1589827-9
SSM037PC2DTC30N	9-1589456-8
SSM037PC2DX012Q	4-1589456-2
SSM037PC2DX018N	4-1589456-3
SSM037PC2GXC30N	4-1589456-4
SSM037PC4DX018N	8-1589456-6
SSM037SC0DC024N	0-1589901-9
SSM037SC0DC036N	7-1589457-8
SSM037SC2DC018	6-1589457-5
SSM037SC2DC018N	6-1589457-6
SSM037SC2DC024N	1-1589901-1
SSM037SC2DT012N	0-1589901-2
SSM037SC2DTC30N	9-1589457-5
SSM051PC0DC024N	2-1589827-6
SSM051PC2DC006	4-1589456-5
SSM051PC2DC006N	4-1589456-6
SSM051PC2DC012N	4-1589456-7
SSM051PC2DC018	4-1589456-8
SSM051PC2DC024	4-1589456-9
SSM051PC2DC024N	5-1589456-0
SSM051PC2DC030N	5-1589456-1
SSM051PC2DCC06Q	5-1589456-2
SSM051PC2DCC30N	9-1589456-3
SSM051PC2DM012Q	5-1589456-3
SSM051PC2DM018N	6-1589456-7
SSM051PC2DM024N	5-1589456-4
SSM051PC2DMC10N	5-1589456-5
SSM051PC2DMC30N	5-1589456-6
SSM051PC2DNC06Q	5-1589456-7
SSM051PC2DNC15Q	5-1589456-8
SSM051PC2DT012N	2-1589827-0
SSM051PC2DT018N	2-1589827-1
SSM051PC2DX008	5-1589456-9
SSM051PC2DX012Q	0-1589827-4
SSM051PC2DXM05Q	6-1589456-0
SSM051PC2DY012N	6-1589456-1
SSM051PC2GX012N	6-1589456-2
SSM051SC0DC024N	1-1589901-0
SSM051SC2DC018	6-1589457-7
SSM051SC2DC018N	6-1589457-8
SSM051SC2DNC15Q	6-1589457-9
SSM051SC2DT012N	0-1589901-3
SSM051SC2DT018N	0-1589901-4
SSM051SC2DT021	7-1589457-1
SSM051SC2GX012N	7-1589457-3
STL009PC0DC006N	1-1589788-1
STL009PC0DC036	7-1589788-6
STL009PC0DC036N	7-1589788-5
STL009PC0DM024N	9-1589475-9
STL009PC1DM024N	2-1589788-9
STL009PC2DC012	1-1589472-1
STL009PC2DC012M	6-1589788-9
STL009PC2DC012N	1-1589472-2
STL009PC2DC018	1-1589472-3
STL009PC2DC018M	1-1589472-4
STL009PC2DC018N	1-1589472-5
STL009PC2DC024	3-1589788-7
STL009PC2DC036N	1-1589472-6
STL009PC2DCM01N	5-1589475-3
STL009PC2DCM02N	8-1589788-4
STL009PC2DM010N	1-1589472-7
STL009PC2DM024N	0-1589788-1
STL009PC2DM030N	0-1589788-2
STL009PC2DM048N	3-1589475-0
STL009PC2DX024N	1-1589472-8
STL009PC2GX010N	1-1589472-9
STL009PC3DX024N	2-1589472-0
STL009PC3DX030N	2-1589472-1
STL009SC0DC006N	3-1589777-8
STL009SC0DC012N	8-1589477-3
STL009SC0DC030N	3-1589777-9
STL009SC2DC012	0-1589476-6
STL009SC2DC012N	0-1589476-7
STL009SC2DC018N	8-1589477-4
STL009SC2DC036N	0-1589476-8
STL009SC2DM036N	2-1589777-7
STL009SC3DX024N	0-1589476-9
STL015PC0DC006N	2-1589472-2
STL015PC0DC012Q	2-1589472-3
STL015PC0DMM03N	2-1589472-4
STL015PC1DNC50N	2-1589472-5
STL015PC2DC006	2-1589472-6
STL015PC2DC008	2-1589472-7
STL015PC2DC010N	2-1589472-8
STL015PC2DC012	2-1589472-9
STL015PC2DC012N	3-1589472-0
STL015PC2DC015N	3-1589472-1
STL015PC2DC015Q	8-1589475-1
STL015PC2DC018M	3-1589472-2
STL015PC2DC018N	3-1589475-9
STL015PC2DC030N	3-1589472-3
STL015PC2DC036N	3-1589472-4
STL015PC2DCC10N	3-1589472-5
STL015PC2DM010N	3-1589472-6
STL015PC2DM048N	3-1589475-1
STL015PC2DNC50N	3-1589472-7
STL015PC2DX006N	8-1589475-0
STL015PC2DX010N	3-1589472-8
STL015PC2DX036N	3-1589472-9
STL015PC2DY006N	9-1589475-4
STL015PC2GX040N	4-1589472-0
STL015SC0DMM03N	1-1589476-0
STL015SC2DC005N	8-1589477-5
STL015SC2DC008	1-1589476-1
STL015SC2DC008N	1-1589476-2
STL015SC2DC012N	1-1589476-3
STL015SC2DC018N	1-1589476-4
STL015SC2DC030N	1-1589476-5
STL015SC2DC036N	1-1589476-6
STL015SC2DX010N	1-1589476-7
STL015SC3DX024N	1-1589476-8
STL025PC0DC006N	6-1589475-4
STL025PC0DC012N	3-1589788-3
STL025PC2DC006	4-1589472-1
STL025PC2DC006M	5-1589475-7
STL025PC2DC006N	4-1589472-2
STL025PC2DC010N	4-1589472-3
STL025PC2DC012	4-1589472-4
STL025PC2DC012N	4-1589472-5
STL025PC2DC015N	4-1589472-6
STL025PC2DC015Q	8-1589475-2
STL025PC2DC018	8-1589475-6
STL025PC2DC018M	7-1589788-3
STL025PC2DC018N	4-1589472-7
STL025PC2DC018Q	7-1589788-4
STL025PC2DC020N	4-1589472-8
STL025PC2DC030N	4-1589472-9
STL025PC2DM010N	5-1589472-0
STL025PC2DT024N	6-1589475-2
STL025PC2DY006N	9-1589475-5
STL025PC2GX036	4-1589788-7
STL025PC3DX006N	5-1589472-1
STL025PC3DX030N	9-1589475-2
STL025PC4DX030N	5-1589472-2
STL025SC2DC001N	1-1589476-9
STL025SC2DC006N	2-1589476-0
STL025SC2DC012N	2-1589476-1
STL025SC2DC030N	2-1589476-2
STL025SC2DC036N	2-1589476-3
STL025SC3DC004N	9-1589477-4
STL025SC3DX030N	0-1589777-5
STL037PC2DC010N	5-1589472-3
STL037PC2DC012	5-1589472-4
STL037PC2DC012M	5-1589472-5
STL037PC2DC012N	5-1589472-6
STL037PC2DC012Q	8-1589788-2
STL037PC2DC017N	5-1589472-7
STL037PC2DC018M	5-1589472-8
STL037PC2DC018N	5-1589472-9
STL037PC2DC018Q	2-1589788-4
STL037PC2DC020Q	6-1589472-0
STL037PC2DC024N	3-1589788-0
STL037PC2DC036M	6-1589472-1
STL037PC2DC036N	6-1589472-2
STL037PC2DC040N	6-1589472-3
STL037PC2DCC15N	6-1589472-4
STL037PC2DM010N	6-1589472-5
STL037PC2DM048N	3-1589475-2
STL037PC2DT024N	6-1589475-1
STL037PC2DY006N	9-1589475-6
STL037PC2DY020N	7-1589475-4
STL037PC2GX005N	6-1589472-6
STL037PC3DC001	5-1589788-1
STL037SC2DC012N	2-1589476-4
STL037SC2DC012Q	2-1589476-5
STL037SC2DC030N	2-1589476-6
STL037SC2DC036N	2-1589476-7
STL037SC2DCC15N	2-1589476-8
STL037SC3DC001N	2-1589777-8
STL037SC3DX024N	2-1589476-9
STL051PC0DXC50N	6-1589472-7
STL051PC2DC003N	6-1589472-8
STL051PC2DC006N	6-1589472-9
STL051PC2DC012	7-1589472-0
STL051PC2DC012N	7-1589472-1
STL051PC2DC018	7-1589472-2
STL051PC2DC018N	3-1589788-8
STL051PC2DC018Q	2-1589788-5
STL051PC2DC024N	7-1589472-3
STL051PC2DC036N	7-1589472-4
STL051PC2DC040N	7-1589472-5

Dimensions are shown for reference purposes only. Specifications subject to change.

Dimensions are in millimeters unless otherwise specified.

USA: +1 800 522 6752
Asia Pacific: +86 0 400 820 6015
UK: +44 800 267 666

For additional support numbers please visit www.te.com

Part Number Index Cross Reference (Continued)

NANONICS Part Number	TE Part Number
STL051PC2DCC35N	7-1589472-6
STL051PC2DM048N	3-1589475-3
STL051PC2DNC50	7-1589472-7
STL051PC2DT024N	6-1589475-0
STL051SC2DC003N	3-1589476-0
STL051SC2DC012N	3-1589476-1
STL051SC2DC018N	3-1589476-2
STL051SC2DC024N	3-1589476-3
STL051SC2DC036N	0-1589777-1
STL051SC2DC048	3-1589476-4
STL051SC2DX024	3-1589476-5
STL065PC0DC006N	6-1589475-5
STL065PC0DC012N	3-1589788-4
STL065PC0DC036N	7-1589472-8
STL065PC0DC036Q	1-1589788-7
STL065PC2DC006	7-1589472-9
STL065PC2DC006M	5-1589475-8
STL065PC2DC006N	8-1589472-0
STL065PC2DC012N	8-1589472-1
STL065PC2DC018	8-1589472-2
STL065PC2DC018N	8-1589472-3
STL065PC2DC018Q	2-1589788-6
STL065PC2DC024N	8-1589472-4
STL065PC2DC036N	8-1589472-5
STL065PC2DC040N	8-1589472-6
STL065PC2DC072N	8-1589472-7
STL065PC2DCC10N	8-1589472-8
STL065PC2DM018N	8-1589472-9
STL065PC2DM036N	9-1589472-0
STL065PC2DT024N	6-1589475-3
STL065PC2DTC10N	8-1589788-9
STL065PC2GX036Q	9-1589472-1
STL065PC3DM072N	9-1589472-2
STL065SC2DC006N	3-1589476-6
STL065SC2DC012N	3-1589476-7
STL065SC2DC048N	3-1589476-8
STL065SC2DM036N	3-1589476-9
STL065SC3DM072N	4-1589476-0
STM009PC0DC020N	9-1589472-3
STM009PC0DM024N	1-1589788-2
STM009PC0DXC10N	9-1589472-4
STM009PC2DC003N	9-1589472-5
STM009PC2DC004N	9-1589472-6
STM009PC2DC006	9-1589472-7
STM009PC2DC006N	9-1589472-8
STM009PC2DC012	9-1589472-9
STM009PC2DC012M	7-1589788-9
STM009PC2DC012N	0-1589473-1
STM009PC2DC016N	0-1589473-2
STM009PC2DC018N	0-1589473-3
STM009PC2DC019	0-1589473-4
STM009PC2DC020Q	0-1589473-5
STM009PC2DC024	0-1589473-6
STM009PC2DC024N	0-1589473-7
STM009PC2DC024Q	8-1589475-3
STM009PC2DC028N	0-1589473-8
STM009PC2DC030N	0-1589473-9

NANONICS Part Number	TE Part Number
STM009PC2DC036	1-1589473-0
STM009PC2DC036M	1-1589473-1
STM009PC2DC036N	1-1589473-2
STM009PC2DC060N	5-1589475-4
STM009PC2DC060Q	1-1589473-3
STM009PC2DCC10Q	0-1589788-8
STM009PC2DCC30N	7-1589475-1
STM009PC2DCC40N	1-1589473-4
STM009PC2DCC46N	8-1589788-6
STM009PC2DCC50N	4-1589475-8
STM009PC2DCC90Q	1-1589473-5
STM009PC2DCM01N	1-1589473-6
STM009PC2DCM02N	8-1589788-3
STM009PC2DM012N	1-1589473-7
STM009PC2DM012Q	1-1589473-8
STM009PC2DM018N	1-1589473-9
STM009PC2DM036N	2-1589473-0
STM009PC2DN036M	2-1589473-1
STM009PC2DT006Q	7-1589475-6
STM009PC2DT012N	7-1589788-1
STM009PC2DT018N	2-1589473-2
STM009PC2DT030N	2-1589473-3
STM009PC2DT036N	9-1589475-0
STM009PC2DTC45N	2-1589475-9
STM009PC2DX006Q	3-1589475-8
STM009PC2DX010N	2-1589473-4
STM009PC2DX012N	4-1589788-1
STM009PC2DX024N	2-1589473-5
STM009PC2DXC15Q	2-1589473-6
STM009PC2DXM01Q	8-1589475-4
STM009PC2DY030N	2-1589788-8
STM009PC2GX006	5-1589788-3
STM009PC2GX006N	6-1589788-3
STM009PC2GX012N	3-1589788-2
STM009PC3DM024Q	6-1589475-7
STM009SC0DX012N	4-1589476-1
STM009SC2DC003N	8-1589477-2
STM009SC2DC006	4-1589476-2
STM009SC2DC006HN	4-1589476-3
STM009SC2DC006N	4-1589476-4
STM009SC2DC012HN	4-1589476-5
STM009SC2DC012N	4-1589476-6
STM009SC2DC012Q	4-1589476-7
STM009SC2DC018HM	4-1589476-8
STM009SC2DC018HN	4-1589476-9
STM009SC2DC018N	5-1589476-0
STM009SC2DC024N	5-1589476-1
STM009SC2DC024Q	2-1589777-5
STM009SC2DC036HN	5-1589476-2
STM009SC2DC036N	5-1589476-3
STM009SC2DC048N	5-1589476-4
STM009SC2DC060Q	5-1589476-5
STM009SC2DCC46N	4-1589777-7
STM009SC2DCM01HN	5-1589476-6
STM009SC2DCM01N	9-1589477-1
STM009SC2DCM02N	5-1589476-7
STM009SC2DM012HN	8-1589477-0

NANONICS Part Number	TE Part Number
STM009SC2DM012Q	2-1589777-0
STM009SC2DM018HN	5-1589476-8
STM009SC2DM036N	5-1589476-9
STM009SC2DT012HN	6-1589476-0
STM009SC2DT012N	6-1589476-1
STM009SC2DT030N	6-1589476-2
STM009SC2DX010N	6-1589476-3
STM009SC2DX012HN	6-1589476-4
STM009SC2DX012N	6-1589476-5
STM009SC2DXC15Q	6-1589476-6
STM009SC2DXM01Q	9-1589477-9
STM015PC0DC036N	5-1589788-4
STM015PC0DCM02Q	2-1589473-9
STM015PC0DM012N	3-1589473-0
STM015PC0DM024N	1-1589788-3
STM015PC2DC003N	3-1589473-6
STM015PC2DC005N	3-1589473-7
STM015PC2DC006N	3-1589473-8
STM015PC2DC012N	3-1589473-9
STM015PC2DC012Q	4-1589473-0
STM015PC2DC016N	4-1589473-1
STM015PC2DC018N	4-1589473-2
STM015PC2DC020Q	4-1589473-3
STM015PC2DC024N	4-1589473-4
STM015PC2DC030N	4-1589473-5
STM015PC2DC036	4-1589473-6
STM015PC2DC036M	4-1589473-7
STM015PC2DC036N	4-1589473-8
STM015PC2DC048N	4-1589473-9
STM015PC2DC060Q	5-1589473-0
STM015PC2DC120N	5-1589473-1
STM015PC2DCC10Q	0-1589788-9
STM015PC2DCC30N	5-1589473-2
STM015PC2DCC90Q	5-1589473-3
STM015PC2DCM01N	5-1589473-4
STM015PC2DM018N	5-1589473-5
STM015PC2DM020N	4-1589788-2
STM015PC2DM024N	5-1589473-6
STM015PC2DM036N	5-1589473-7
STM015PC2DMM01N	5-1589473-8
STM015PC2DT006Q	5-1589473-9
STM015PC2DT012N	6-1589473-0
STM015PC2DT030N	6-1589473-1
STM015PC2DT036N	6-1589473-2
STM015PC2DTC15N	4-1589475-1
STM015PC2DTC22Q	3-1589788-9
STM015PC2DTC45N	6-1589473-3
STM015PC2DTC95Q	2-1589475-8
STM015PC2DX005Q	5-1589788-9
STM015PC2DX010N	6-1589473-4
STM015PC2DX012N	6-1589473-5
STM015PC2DX024N	6-1589473-6
STM015PC2DX030N	6-1589473-7
STM015PC2DX048N	6-1589473-8
STM015PC2DX072N	6-1589788-5
STM015PC2DXC15Q	6-1589473-9
STM015PC2GX004N	7-1589473-0

NANONICS Part Number	TE Part Number
STM015PC3DM024Q	6-1589475-8
STM015PC3DX024N	7-1589473-1
STM015PC4DX012N	7-1589473-2
STM015PC4DX024N	8-1589475-7
STM015SC0DC012DQ	1-1589777-8
STM015SC0DC036N	2-1589777-9
STM015SC0DM036N	2-1589777-1
STM015SC0DXC10N	6-1589476-7
STM015SC0DXC10Q	6-1589476-8
STM015SC2DC003N	7-1589476-1
STM015SC2DC004HN	7-1589476-2
STM015SC2DC006N	7-1589476-3
STM015SC2DC008HN	7-1589476-4
STM015SC2DC008Q	3-1589777-4
STM015SC2DC012HN	7-1589476-5
STM015SC2DC012N	7-1589476-6
STM015SC2DC015Q	1-1589777-7
STM015SC2DC016N	7-1589476-7
STM015SC2DC018N	7-1589476-8
STM015SC2DC024N	7-1589476-9
STM015SC2DC036N	8-1589476-0
STM015SC2DC036Q	0-1589777-6
STM015SC2DC060Q	8-1589476-1
STM015SC2DCC30N	8-1589476-2
STM015SC2DCC50N	1-1589777-9
STM015SC2DCM01HN	8-1589476-3
STM015SC2DM006N	8-1589476-4
STM015SC2DM010N	1-1589777-4
STM015SC2DM012HN	1-1589777-2
STM015SC2DM024N	4-1589777-0
STM015SC2DM036N	1-1589777-0
STM015SC2DMM01N	8-1589476-5
STM015SC2DT006Q	8-1589476-6
STM015SC2DT012HN	8-1589476-7
STM015SC2DT012N	4-1589777-4
STM015SC2DT030N	8-1589476-8
STM015SC2DTC90Q	8-1589477-1
STM015SC2DX005HN	8-1589476-9
STM015SC2DX006HN	9-1589476-0
STM015SC2DX010N	9-1589476-1
STM015SC2DX012N	9-1589476-2
STM015SC2DX018HN	9-1589476-3
STM015SC2DXC15Q	9-1589476-4
STM015SC4DX012Q	9-1589476-5
STM015SC4DX030N	9-1589476-6
STM015SC4DXC20N	9-1589476-7
STM025PC0DC012N	7-1589473-3
STM025PC0DC036N	5-1589788-5
STM025PC0DC060N	4-1589475-4
STM025PC0DM012N	7-1589473-4
STM025PC0DM024N	1-1589788-4
STM025PC0DM036N	4-1589788-5
STM025PC2DC003	7-1589473-5
STM025PC2DC003N	7-1589473-6
STM025PC2DC004	7-1589473-7
STM025PC2DC006	7-1589473-8
STM025PC2DC006N	7-1589473-9

Dimensions are shown for reference purposes only. Specifications subject to change.

Dimensions are in millimeters unless otherwise specified.

USA: +1 800 522 6752
Asia Pacific: +86 0 400 820 6015
UK: +44 800 267 666

For additional support numbers please visit www.te.com

Part Number Index Cross Reference (Continued)

NANONICS Part Number	TE Part Number
STM025PC2DC006Q	7-1589788-8
STM025PC2DC008N	8-1589473-0
STM025PC2DC010N	8-1589473-1
STM025PC2DC010Q	6-1589788-0
STM025PC2DC012	8-1589473-2
STM025PC2DC012N	8-1589473-3
STM025PC2DC015N	8-1589473-4
STM025PC2DC016N	8-1589473-5
STM025PC2DC018N	8-1589473-6
STM025PC2DC020N	8-1589473-7
STM025PC2DC020Q	8-1589473-8
STM025PC2DC024N	8-1589473-9
STM025PC2DC024Q	9-1589473-0
STM025PC2DC030N	9-1589473-1
STM025PC2DC036M	9-1589473-2
STM025PC2DC036N	9-1589473-3
STM025PC2DC048N	9-1589473-4
STM025PC2DC060N	9-1589473-5
STM025PC2DC060Q	9-1589473-6
STM025PC2DC072N	9-1589473-7
STM025PC2DC084N	7-1589475-9
STM025PC2DC120N	9-1589473-8
STM025PC2DC180N	9-1589473-9
STM025PC2DCC10Q	1-1589788-0
STM025PC2DCC40N	0-1589474-1
STM025PC2DCC46N	8-1589788-7
STM025PC2DCC50N	0-1589474-2
STM025PC2DCC60N	0-1589474-3
STM025PC2DM006Q	0-1589474-4
STM025PC2DM012N	0-1589788-7
STM025PC2DM012Q	0-1589474-5
STM025PC2DM018N	0-1589474-6
STM025PC2DM020N	4-1589788-3
STM025PC2DM024N	0-1589474-7
STM025PC2DM036N	0-1589474-8
STM025PC2DM072Q	1-1589788-6
STM025PC2DT006N	3-1589475-4
STM025PC2DT012M	4-1589475-6
STM025PC2DT012N	0-1589474-9
STM025PC2DT024N	4-1589788-9
STM025PC2DT030N	1-1589474-0
STM025PC2DT036Q	1-1589474-1
STM025PC2DT048Q	1-1589474-2
STM025PC2DT084N	6-1589788-4
STM025PC2DX005	1-1589474-3
STM025PC2DX006N	1-1589474-4
STM025PC2DX006Q	1-1589474-5
STM025PC2DX010N	1-1589474-6
STM025PC2DX012N	1-1589474-7
STM025PC2DX018N	1-1589474-8
STM025PC2DX048N	1-1589474-9
STM025PC2DX072N	6-1589788-6
STM025PC2DY004	2-1589474-0
STM025PC2DY006	2-1589474-1
STM025PC2DY006N	2-1589474-2
STM025PC3DM024Q	6-1589475-9
STM025PC3DX030N	9-1589475-1

NANONICS Part Number	TE Part Number
STM025PC4DX012M	2-1589474-4
STM025PC4DX012N	2-1589474-5
STM025SC0DC036N	3-1589777-0
STM025SC0DM036N	2-1589777-6
STM025SC2DC003	9-1589476-8
STM025SC2DC004	9-1589476-9
STM025SC2DC006N	0-1589477-1
STM025SC2DC008N	0-1589477-2
STM025SC2DC012HN	0-1589477-3
STM025SC2DC012N	0-1589477-4
STM025SC2DC016N	0-1589477-5
STM025SC2DC018N	0-1589477-6
STM025SC2DC020N	0-1589477-7
STM025SC2DC024N	0-1589477-8
STM025SC2DC036N	0-1589477-9
STM025SC2DC040N	1-1589477-0
STM025SC2DC048HN	1-1589477-1
STM025SC2DC048N	1-1589477-2
STM025SC2DC060HN	1-1589477-3
STM025SC2DC060Q	1-1589477-4
STM025SC2DC084N	9-1589477-8
STM025SC2DC180N	1-1589477-5
STM025SC2DCC46Q	4-1589777-8
STM025SC2DCC60N	1-1589477-6
STM025SC2DM010N	1-1589777-5
STM025SC2DM012HN	1-1589777-3
STM025SC2DM024N	4-1589777-1
STM025SC2DM036N	1-1589777-1
STM025SC2DT012HN	1-1589477-7
STM025SC2DT012N	8-1589477-7
STM025SC2DT030N	1-1589477-8
STM025SC2DX005HN	1-1589477-9
STM025SC2DX006N	2-1589477-0
STM025SC2DX010N	2-1589477-1
STM025SC2DX012N	2-1589477-2
STM025SC2DX018N	2-1589477-3
STM025SC2DY018N	2-1589477-4
STM025SC3DC012N	2-1589477-5
STM025SC3DMC20DQ	2-1589477-6
STM025SC3DX030N	0-1589777-4
STM025SC4DX030N	2-1589477-7
STM037PC0DC009N	2-1589474-6
STM037PC0DC009Q	8-1589788-5
STM037PC0DC036N	5-1589788-6
STM037PC0DM024N	1-1589788-5
STM037PC0DM036N	1-1589788-8
STM037PC0DM060N	2-1589788-1
STM037PC0DXC10N	2-1589474-7
STM037PC2DC001N	6-1589788-7
STM037PC2DC003N	2-1589474-8
STM037PC2DC005N	2-1589474-9
STM037PC2DC006M	3-1589474-0
STM037PC2DC006N	3-1589474-1
STM037PC2DC010Q	6-1589788-1
STM037PC2DC012	3-1589474-2
STM037PC2DC012M	3-1589474-3
STM037PC2DC012N	3-1589474-4

NANONICS Part Number	TE Part Number
STM037PC2DC012Q	3-1589474-5
STM037PC2DC015N	3-1589474-6
STM037PC2DC015Q	3-1589474-7
STM037PC2DC018	4-1589475-0
STM037PC2DC018N	3-1589474-9
STM037PC2DC020N	4-1589475-2
STM037PC2DC020Q	4-1589474-0
STM037PC2DC024	4-1589474-1
STM037PC2DC024N	4-1589474-2
STM037PC2DC024Q	5-1589475-2
STM037PC2DC030N	4-1589474-3
STM037PC2DC036	4-1589474-4
STM037PC2DC036N	4-1589474-5
STM037PC2DC036Q	4-1589474-6
STM037PC2DC048N	4-1589474-7
STM037PC2DC060Q	4-1589474-8
STM037PC2DC072N	4-1589474-9
STM037PC2DCC20Q	5-1589474-0
STM037PC2DCC50N	5-1589474-1
STM037PC2DCC50Q	8-1589788-8
STM037PC2DCM01Q	5-1589474-2
STM037PC2DM012N	5-1589475-1
STM037PC2DM018N	5-1589474-3
STM037PC2DM020N	4-1589788-4
STM037PC2DM024M	5-1589474-4
STM037PC2DM024N	5-1589474-5
STM037PC2DM036	7-1589788-7
STM037PC2DM036Q	4-1589475-5
STM037PC2DT006N	3-1589475-5
STM037PC2DT012M	4-1589475-7
STM037PC2DT012N	5-1589474-7
STM037PC2DT030N	5-1589474-8
STM037PC2DT036N	6-1589788-8
STM037PC2DT036Q	8-1589788-0
STM037PC2DTC20Q	5-1589788-0
STM037PC2DX006N	5-1589474-9
STM037PC2DX010N	6-1589474-0
STM037PC2DX012N	6-1589474-1
STM037PC2DX024N	6-1589474-2
STM037PC2GX006N	6-1589474-3
STM037PC3DC012N	6-1589474-4
STM037PC3DM024Q	7-1589475-0
STM037SC0DC036N	3-1589777-1
STM037SC0DM036N	3-1589777-7
STM037SC0DM060N	2-1589777-2
STM037SC0DXC10N	2-1589477-8
STM037SC2DC006N	2-1589477-9
STM037SC2DC006Q	3-1589477-0
STM037SC2DC012HN	0-1589777-9
STM037SC2DC012N	3-1589477-1
STM037SC2DC012Q	9-1589477-0
STM037SC2DC015N	3-1589477-2
STM037SC2DC015Q	8-1589477-9
STM037SC2DC018HN	3-1589477-3
STM037SC2DC018N	3-1589477-4
STM037SC2DC020Q	3-1589477-5
STM037SC2DC024N	3-1589477-6

NANONICS Part Number	TE Part Number
STM037SC2DC036N	3-1589477-7
STM037SC2DC060Q	3-1589477-8
STM037SC2DM010N	1-1589777-6
STM037SC2DM024N	3-1589477-9
STM037SC2DM036Q	8-1589477-6
STM037SC2DT008N	9-1589477-5
STM037SC2DT012N	8-1589477-8
STM037SC2DT020Q	2-1589777-3
STM037SC2DT030N	4-1589477-0
STM037SC2DTC20Q	2-1589777-4
STM037SC2DX006N	4-1589477-1
STM037SC2DX010N	4-1589477-2
STM037SC2DX012N	4-1589477-3
STM037SC2GX006N	4-1589477-4
STM051PC0DC012N	6-1589474-5
STM051PC0DC036N	5-1589788-7
STM051PC0DC048N	6-1589474-6
STM051PC0DM036N	1-1589788-9
STM051PC0DM060N	2-1589788-2
STM051PC0DXC10N	6-1589474-7
STM051PC1DXC20	6-1589474-8
STM051PC2DC003N	6-1589474-9
STM051PC2DC006	7-1589474-0
STM051PC2DC006N	7-1589474-1
STM051PC2DC012N	7-1589474-2
STM051PC2DC012Q	7-1589474-3
STM051PC2DC015N	7-1589474-4
STM051PC2DC015Q	2-1589788-0
STM051PC2DC016N	7-1589474-5
STM051PC2DC018	7-1589474-6
STM051PC2DC018N	7-1589474-7
STM051PC2DC018Q	7-1589474-8
STM051PC2DC024	6-1589475-6
STM051PC2DC024N	7-1589474-9
STM051PC2DC030N	8-1589474-0
STM051PC2DC036N	8-1589474-1
STM051PC2DC036Q	8-1589474-2
STM051PC2DC060N	8-1589474-3
STM051PC2DC060Q	8-1589474-4
STM051PC2DCC20N	8-1589474-5
STM051PC2DCC30N	9-1589475-7
STM051PC2DCC50N	3-1589788-5
STM051PC2DCC50Q	3-1589788-6
STM051PC2DM018N	8-1589474-6
STM051PC2DM024N	7-1589788-0
STM051PC2DMM01N	8-1589474-7
STM051PC2DT012N	8-1589474-9
STM051PC2DT018N	7-1589788-2
STM051PC2DT030N	9-1589474-0
STM051PC2DT036N	9-1589474-1
STM051PC2DT036Q	8-1589788-1
STM051PC2DT072N	9-1589474-2
STM051PC2DX012N	9-1589474-3
STM051PC2DX012Q	9-1589474-4
STM051PC2DX015N	9-1589474-5
STM051PC2DX018	9-1589474-6
STM051PC2DX018N	9-1589474-7

Catalog 1308940
Revised 9-14

www.te.com

Dimensions are shown for reference purposes only. Specifications subject to change.

Dimensions are in millimeters unless otherwise specified.

USA: +1 800 522 6752
Asia Pacific: +86 0 400 820 6015
UK: +44 800 267 666

For additional support numbers please visit www.te.com

Part Number Index Cross Reference (Continued)

NANONICS Part Number	TE Part Number
STM051PC2DY015N	9-1589474-8
STM051PC2GX006N	3-1589475-6
STM051PC2GX012N	3-1589788-1
STM051PC2GXM01N	9-1589474-9
STM051SC0DC036N	3-1589777-2
STM051SC0DXC10N	4-1589477-5
STM051SC1DXC20	4-1589477-6
STM051SC2DC003N	4-1589477-7
STM051SC2DC006	4-1589477-8
STM051SC2DC006N	4-1589477-9
STM051SC2DC008Q	3-1589777-5
STM051SC2DC012N	5-1589477-0
STM051SC2DC015HN	5-1589477-1
STM051SC2DC015N	5-1589477-2
STM051SC2DC016N	5-1589477-3
STM051SC2DC018HN	5-1589477-4
STM051SC2DC018N	5-1589477-5
STM051SC2DC018Q	5-1589477-6
STM051SC2DC036N	5-1589477-7
STM051SC2DC036Q	0-1589777-7
STM051SC2DC060N	5-1589477-8
STM051SC2DC060Q	5-1589477-9
STM051SC2DM012N	6-1589477-0
STM051SC2DM024N	4-1589777-2
STM051SC2DMM01N	6-1589477-1
STM051SC2DT012N	0-1589777-3
STM051SC2DT018N	4-1589777-5
STM051SC2DT030N	6-1589477-3
STM051SC2DX012N	6-1589477-4
STM051SC2DX015N	6-1589477-5
STM065PC0DC036N	5-1589788-8
STM065PC0DM036N	4-1589788-6
STM065PC0DM060N	2-1589788-3
STM065PC0DMC30Q	9-1589475-8
STM065PC0DMM01Q	4-1589788-8
STM065PC2DC003N	0-1589475-1
STM065PC2DC006	0-1589475-2
STM065PC2DC006N	0-1589475-3
STM065PC2DC008Q	0-1589475-4
STM065PC2DC012N	0-1589475-5
STM065PC2DC012Q	0-1589475-6
STM065PC2DC016M	0-1589475-7
STM065PC2DC016N	0-1589475-8
STM065PC2DC018M	0-1589475-9
STM065PC2DC018N	1-1589475-0
STM065PC2DC018Q	1-1589475-1
STM065PC2DC020N	4-1589475-3
STM065PC2DC024N	1-1589475-2
STM065PC2DC024Q	1-1589475-3
STM065PC2DC030N	1-1589475-4
STM065PC2DC036	5-1589475-6
STM065PC2DC036N	1-1589475-5
STM065PC2DC072N	1-1589475-6
STM065PC2DCC50N	4-1589475-9
STM065PC2DCM01N	7-1589475-7
STM065PC2DCM01Q	8-1589475-9
STM065PC2DM018N	1-1589475-7

NANONICS Part Number	TE Part Number
STM065PC2DM024N	5-1589475-0
STM065PC2DM036N	6-1589788-2
STM065PC2DMC46N	4-1589788-0
STM065PC2DT012N	8-1589475-5
STM065PC2DT018N	1-1589475-8
STM065PC2DT030N	1-1589475-9
STM065PC2DTC10N	9-1589788-0
STM065PC2DX006N	2-1589475-0
STM065PC2DX018N	2-1589475-1
STM065PC2DX036N	2-1589475-2
STM065PC2DY012N	2-1589475-3
STM065PC2DY012Q	2-1589788-7
STM065PC2DY024N	2-1589475-4
STM065PC2GXM01N	2-1589475-5
STM065PC3DM006N	2-1589475-6
STM065PC3DX024N	2-1589475-7
STM065SC0DC036N	3-1589777-3
STM065SC2DC003N	6-1589477-6
STM065SC2DC006	6-1589477-7
STM065SC2DC006N	6-1589477-8
STM065SC2DC008Q	3-1589777-6
STM065SC2DC012N	6-1589477-9
STM065SC2DC012Q	7-1589477-0
STM065SC2DC015N	7-1589477-1
STM065SC2DC018	7-1589477-2
STM065SC2DC018N	7-1589477-3
STM065SC2DC018Q	7-1589477-4
STM065SC2DC024N	7-1589477-5
STM065SC2DC024Q	7-1589477-6
STM065SC2DC036	9-1589477-3
STM065SC2DC036HN	7-1589477-7
STM065SC2DC036N	7-1589477-8
STM065SC2DC036Q	0-1589777-8
STM065SC2DM024N	4-1589777-3
STM065SC2DT012N	0-1589777-2
STM065SC2DT018N	4-1589777-6
STM065SC2DT030N	7-1589477-9

NANONICS Part Number	TE Part Number
Jumper Assemblies	
JSL005PP2DC002N	1-1589735-5
JSL009PP2DC006N	0-1589735-8
JSL009PP2DX003N	7-1589671-1
JSL009PP2DX006N	0-1589735-7
JSL009PR2DC012N	7-1589671-2
JSL009RR2DX0.5N	7-1589671-3
JSL015PD2DX002N	4-1589699-8
JSL015PP2DX001N	0-1589735-2
JSL015PP2DX006N	7-1589671-4
JSL025PP2DC012N	0-1589735-1
JSL037PD2GXC02N	7-1589671-5
JSL037PR2DX002N	7-1589671-6
JSL037PR2DX003N	0-1589736-2
JSL051PD2GXC10N	7-1589671-7
JSL051PD2GXC17N	7-1589671-8
JSL051PD2GXC22N	7-1589671-9
JSL051PD2GXC30N	8-1589671-0
JSL051PD2GXC75N	8-1589671-1
JSL051PD2GXC80N	8-1589671-2
JSL051PP2DC004N	8-1589671-3
JSL051PP2GXC10N	8-1589671-4
JSL051PP2GXC15N	8-1589671-5
JSL051PP2GXC17N	8-1589671-6
JSL051PP2GXC22N	8-1589671-7
JSL051PP2GXC75N	8-1589671-8
JSL051PP2GXC80N	8-1589671-9
JSL051PR2GX002	0-1589736-4
JSM005PP2DC002N	9-1589671-0
JSM005PP2DC003N	1-1589735-0
JSM005PP2DC005N	0-1589735-9
JSM005PP2DC008	0-1589735-3
JSM005PP2DC02.5N	0-1589735-5
JSM005PP2DC072	0-1589735-4
JSM005PP2DT150N	9-1589671-1
JSM009PP2DC002N	9-1589671-5
JSM009PP2DC003N	9-1589671-6
JSM009PP2DC006N	1-1589735-2
JSM009PP2DC024N	9-1589671-7
JSM009PP2DM005Q	0-1589735-6
JSM009PR2DC002N	9-1589671-8
JSM009PR2DC006N	9-1589671-9
JSM015PD2DCC02N	0-1589672-6
JSM015PD2GXC05N	0-1589797-3
JSM015PP2DC004N	1-1589735-1
JSM015PP2DC006N	1-1589735-3
JSM015PP2GX001N	0-1589799-3
JSM015PP2GX002N	0-1589799-2
JSM015PP2GX006N	0-1589799-1
JSM015PP2GX014N	0-1589672-7
JSM015PP2GX018N	0-1589672-8
JSM015PR2DC001N	0-1589672-9
JSM015PR2DC002N	1-1589672-0
JSM015PR2DC003N	1-1589672-1
JSM015PR2DC004N	4-1589699-9
JSM015PR2DC006N	1-1589672-2
JSM015PR2DX003N	0-1589736-1

NANONICS Part Number	TE Part Number
JSM025PP2DC006N	1-1589735-4
JSM025PP2DX004N	2-1589672-0
JSM025PP2DX008N	2-1589672-1
JSM025PP2DXC17N	2-1589672-2
JSM025PP2GX003N	2-1589672-3
JSM025PP2GX024N	2-1589672-4
JSM025PP4DXC20N	2-1589672-5
JSM025PR2DC006N	2-1589672-6
JSM025PR2DC1.5N	5-1589699-5
JSM025PR2GX002N	2-1589672-7
JSM025RR2DC006N	0-1589803-1
JSM037PD2GXC02N	0-1589797-2
JSM037PD2GXC05N	0-1589797-1
JSM037PD2GXC10N	3-1589672-3
JSM037PP2DCC06Q	3-1589672-4
JSM037PP2DCC08Q	3-1589672-5
JSM037PP2DX018N	3-1589672-6
JSM037PP2GX072N	3-1589672-7
JSM037PR2DTC03N	0-1589736-3
JSM051PD2GXC10N	4-1589672-7
JSM051PD2GXC12	4-1589672-8
JSM051PD2GXC12N	4-1589672-9
JSM051PD2GXC15N	5-1589672-0
JSM051PD2GXC17N	5-1589672-1
JSM051PD2GXC50N	5-1589672-2
JSM051PP2DCC12Q	5-1589672-3
JSM051PP2GXC12	5-1589672-4
JSM051PP2GXC12N	5-1589672-5
JSM051PP2GXC17N	5-1589672-6
JSM051PP2GXC22N	5-1589672-7
JSM051PP2GXC50N	5-1589672-8
JSM051PP2GXC75N	5-1589672-9
JSM051PP2GXC80N	6-1589672-0
JSM051PR2DC1.5N	5-1589699-6
JSM051PR2GX002N	6-1589672-1
JTL009PD2GX006N	3-1589729-8
JTL009PD2GX012N	7-1589699-3
JTL009PD2GX018N	3-1589729-9
JTL009PP2DC012N	0-1589737-3
JTL009PP2DX006N	1-1589737-7
JTL009PR2DC018N	5-1589699-8
JTL015PP2DX002N	0-1589737-1
JTL015PP2DX006N	1-1589737-6
JTL015PP2DX008M	9-1589672-5
JTL015PP2DX014N	5-1589699-0
JTL015PR0DC011N	1-1589738-3
JTL015PR2DX008	9-1589672-6
JTL025PD2DC010N	5-1589699-9
JTL025PD2DC1.25N	5-1589699-7
JTL025PP2DC001M	4-1589737-3
JTL025PP2DC001N	4-1589737-2
JTL025PP2DC036N	9-1589672-8
JTL025PP2DCC05N	0-1589737-5
JTL025PP2DCC07N	9-1589672-9
JTL025PP2DX002N	0-1589673-1
JTL025PP2DX003N	0-1589673-2
JTL025PP2DX010N	0-1589673-3

Dimensions are shown for reference purposes only. Specifications subject to change.

Dimensions are in millimeters unless otherwise specified.

USA: +1 800 522 6752
Asia Pacific: +86 0 400 820 6015
UK: +44 800 267 666

For additional support numbers please visit www.te.com

Part Number Index Cross Reference (Continued)

NANONICS Part Number	TE Part Number
JTL025PR0DC007N	1-1589738-4
JTL025PR2DCM31N	0-1589673-4
JTL037PP2DC012N	4-1589737-0
JTL037PP2DC024N	4-1589737-1
JTL037PP2DC07.5N	0-1589673-5
JTL037PP2DC08.5N	0-1589673-6
JTL037PP2DC09.5N	0-1589673-7
JTL037PP2DM006N	0-1589737-7
JTL037PP2DX002N	0-1589673-8
JTL037PP2DX003N	0-1589673-9
JTL037PP2DX006N	1-1589737-5
JTL037PP2DX012	1-1589673-0
JTL037PP2DX012N	2-1589737-7
JTL037PR2DC012N	3-1589738-0
JTL037PR2DC024N	3-1589738-1
JTL037PR2DT024N	1-1589673-1
JTL037PR2DX001	0-1589738-9
JTL051PP2DC009N	0-1589737-4
JTL051PP2DX002N	1-1589673-4
JTL051PP2DX006N	1-1589673-5
JTL051PP2DX010N	1-1589673-6
JTL051PP2DX024N	1-1589673-7
JTL051PR2DC012N	1-1589738-5
JTL051PR2DC048	1-1589673-8
JTL065PP2DC005N	2-1589737-2
JTL065PP2DC006N	2-1589737-5
JTL065PP2DC012N	2-1589673-3
JTL065PP2DCC05N	2-1589673-4
JTL065PP2DX012N	0-1589737-8
JTL065PR2DX002N	0-1589738-8
JTM009PD2DX003N	3-1589673-1
JTM009PD2DX006N	3-1589673-2
JTM009PP2DC006N	4-1589737-9
JTM009PP2DC012N	4-1589737-8
JTM009PP2DC02.5N	3-1589673-3
JTM009PP2DM004N	1-1589737-0
JTM009PP2DT002N	3-1589673-4
JTM009PP2DT004N	3-1589673-5
JTM009PP2DX006N	3-1589673-6
JTM009PR2DC003Q	1-1589738-9
JTM009PR2DCC50N	3-1589673-7
JTM009PR2DT002M	0-1589738-3
JTM009PR2DX001N	2-1589738-5
JTM015PD2DX006N	0-1589798-1
JTM015PD2GX006N	0-1589798-2
JTM015PD2GX012N	6-1589673-4
JTM015PP2DC006M	6-1589673-5
JTM015PP2DC012M	6-1589673-6
JTM015PP2DC02.5N	6-1589673-7
JTM015PP2DC05.5N	4-1589737-4
JTM015PP2DT004N	6-1589673-8
JTM015PP2DX001N	6-1589673-9
JTM015PP2DX005Q	2-1589737-8
JTM015PP2DX006N	7-1589673-0
JTM015PP2DX009N	7-1589673-1
JTM015PP2DX024N	7-1589673-2
JTM015PP2DY003N	1-1589737-9

NANONICS Part Number	TE Part Number
JTM015PP2DY011N	2-1589737-0
JTM015PP2DY022N	2-1589737-1
JTM015PR2DC002N	7-1589673-8
JTM015PR2DC003Q	2-1589738-0
JTM015PR2DC012M	7-1589673-9
JTM015PR2DT001N	8-1589673-0
JTM015PR2DT002M	0-1589738-2
JTM015PR2DX001N	2-1589738-6
JTM015PR2DX003N	0-1589738-6
JTM015RR2DC012N	0-1589804-1
JTM025PD2GX002N	0-1589798-3
JTM025PP2DC001N	4-1589737-7
JTM025PP2DC012N	4-1589737-6
JTM025PP2DC018N	3-1589737-3
JTM025PP2DC024N	3-1589737-5
JTM025PP2DC030N	3-1589737-7
JTM025PP2DC035N	5-1589737-0
JTM025PP2DC2.75N	1-1589737-8
JTM025PP2DM024M	3-1589737-2
JTM025PP2DX001N	2-1589674-8
JTM025PP2DX012N	2-1589674-9
JTM025PP2DX018N	3-1589674-0
JTM025PP2DX022N	3-1589674-1
JTM025PP2DX03.8M	3-1589674-2
JTM025PP2DX03.8N	3-1589674-3
JTM025PP2DX040N	2-1589737-4
JTM025PP2DY006	0-1589737-6
JTM025PP2DY006N	3-1589674-4
JTM025PP2DY020N	3-1589674-5
JTM025PP2DY024N	2-1589737-3
JTM025PR0DXC20N	3-1589674-6
JTM025PR0DXC30N	3-1589674-7
JTM025PR2DC003Q	2-1589738-1
JTM025PR2DT001N	3-1589674-8
JTM025PR2DT002M	0-1589738-1
JTM025PR2DT240N	3-1589674-9
JTM025PR2DX0.5N	4-1589674-0
JTM025PR2DX001N	2-1589738-7
JTM025PR2DX003N	0-1589738-5
JTM025PR2DX006Q	4-1589674-1
JTM025PR2DX012N	4-1589674-2
JTM025PR2DX020	4-1589674-3
JTM037PD2DC002N	8-1589674-8
JTM037PD2DC004N	8-1589674-9
JTM037PD2GX012N	9-1589674-0
JTM037PD2GX024N	9-1589674-1
JTM037PP0DM006	9-1589674-2
JTM037PP0DM006N	3-1589737-9
JTM037PP2DC018N	3-1589737-4
JTM037PP2DC024N	3-1589737-6
JTM037PP2DC036N	3-1589737-8
JTM037PP2DC041N	5-1589737-1
JTM037PP2DX001.75N	9-1589674-3
JTM037PP2DX001N	9-1589674-4
JTM037PP2DX002N	0-1589737-9
JTM037PP2DX002Q	3-1589737-0
JTM037PP2DX004N	9-1589674-6

NANONICS Part Number	TE Part Number
JTM037PP2DX006Q	9-1589674-7
JTM037PP2DX009Q	9-1589674-8
JTM037PP2DX010Q	2-1589737-9
JTM037PP2DX016	9-1589674-9
JTM037PP2DX024N	0-1589675-1
JTM037PP2DX3.5N	2-1589737-6
JTM037PR0DC036M	0-1589675-3
JTM037PR2DC003Q	2-1589738-2
JTM037PR2DC005N	1-1589738-2
JTM037PR2DCC16Q	1-1589738-0
JTM037PR2DT001N	0-1589675-4
JTM037PR2DT002M	0-1589738-4
JTM037PR2DX001	1-1589738-1
JTM037PR2DX001N	0-1589675-5
JTM037PR2DX001Q	1-1589738-6
JTM037PR2DX006Q	1-1589738-7
JTM037PR2GX002	0-1589675-6
JTM037PR2GX003N	0-1589675-7
JTM051PD2DC002N	0-1589798-4
JTM051PD2DT004N	6-1589675-1
JTM051PD2DXC10N	6-1589675-2
JTM051PP2DC001N	4-1589737-5
JTM051PP2DC004N	6-1589675-3
JTM051PP2DC2.5N	7-1589699-4
JTM051PP2DT005	0-1589737-2
JTM051PP2DX001N	6-1589675-4
JTM051PP2DX004N	6-1589675-5
JTM051PP2DX009Q	5-1589737-2
JTM051PP2DX012N	6-1589675-6
JTM051PP2DX036N	1-1589737-3
JTM051PP2DX040N	1-1589737-4
JTM051PP2DX2.5N	6-1589675-7
JTM051PP2DX4.5N	6-1589675-8
JTM051PR0DC036N	2-1589738-9
JTM051PR2DC002N	6-1589675-9
JTM051PR2DC003Q	2-1589738-3
JTM051PR2DC005	7-1589675-0
JTM051PR2DC006Q	2-1589738-4
JTM051PR2DC018N	0-1589738-7
JTM051PR2DT001N	7-1589675-1
JTM051PR2DX002N	7-1589675-2
JTM051PR2GX002	7-1589675-3
JTM051PR2GX006Q	7-1589675-4
JTM051RR2DC003	7-1589675-5
JTM065PD2GX022N	7-1589699-1
JTM065PP2DC004N	1-1589737-2
JTM065PP2DMC10Q	3-1589737-1
JTM065PP2DX002N	0-1589676-1
JTM065PP2DX004N	0-1589676-2
JTM065PP2DX006N	0-1589676-3
JTM065PP2DX007N	0-1589676-4
JTM065PR2DC001N	0-1589676-5
JTM065PR2DC003	0-1589676-6
JTM065PR2DC003N	0-1589676-7
JTM065PR2DX001N	2-1589738-8
JTM065PR2DX004N	0-1589676-8
JTM065PR2DX004Q	1-1589738-8

NANONICS Part Number	TE Part Number
JTM065PR2GX001N	0-1589676-9
JTM065RR2DC003	1-1589676-0
Surface Mount	
SSL005L2AN	0-1589462-5
SSL005L2HN	0-1589462-6
SSL009B2H	0-1589700-2
SSL009L2AN	0-1589462-7
SSL009L2AQ	0-1589462-8
SSL009L2HN	0-1589462-9
SSL009L42HN	0-1589463-1
SSL009L43KN	0-1589464-1
SSL009L4CN	0-1589463-2
SSL009L4KN	0-1589463-3
SSL015L2AN	1-1589462-0
SSL015L2AQ	1-1589462-1
SSL015L2CN	1-1589462-2
SSL015L2H	1-1589462-3
SSL015L2HN	1-1589462-4
SSL015L4N	0-1589463-4
SSL015L4PQ	2-1589463-6
SSL025B2	0-1589460-1
SSL025L23N	1-1589462-5
SSL025L2AN	1-1589462-6
SSL025L2HN	1-1589462-7
SSL025L42	0-1589463-5
SSL037B2H	0-1589700-3
SSL037B2N	0-1589460-4
SSL037L2HN	1-1589462-8
SSL037L43KN	0-1589464-2
SSL051B2	0-1589460-5
SSL051L2CN	1-1589462-9
SSL051L2HN	2-1589462-0
SSM005L2HN	2-1589462-1
SSM005L2N	4-1589462-8
SSM005L82HN	0-1589467-3
SSM005L84HN	0-1589467-4
SSM005L85HN	0-1589468-1
SSM009B2H	0-1589700-4
SSM009B2N	0-1589460-7
SSM009L2	2-1589462-2
SSM009L2AN	2-1589462-3
SSM009L2AQ	2-1589462-4
SSM009L2HN	2-1589462-5
SSM009L2N	2-1589462-6
SSM009L2SN	2-1589462-7
SSM009L42KN	0-1589463-6
SSM009L44KN	0-1589463-7
SSM009L44N	0-1589463-8
SSM009L4AQ	2-1589463-7
SSM009L4KN	0-1589463-9
SSM009L85HN	0-1589468-2
SSM015B2N	1-1589460-3
SSM015B45H	0-1589466-1
SSM015H5	0-1589819-1
SSM015L2AN	2-1589462-8
SSM015L2AQ	2-1589462-9

Dimensions are shown for reference purposes only. Specifications subject to change.

Dimensions are in millimeters unless otherwise specified.

USA: +1 800 522 6752
Asia Pacific: +86 0 400 820 6015
UK: +44 800 267 666

For additional support numbers please visit www.te.com

Part Number Index Cross Reference (Continued)

NANONICS Part Number	TE Part Number
SSM015L2CN	3-1589462-0
SSM015L2HN	3-1589462-1
SSM015L2N	4-1589462-7
SSM015L2SN	3-1589462-2
SSM015L44KN	1-1589463-0
SSM015L4KN	1-1589463-1
SSM015L4PQ	1-1589463-2
SSM015L82HN	0-1589467-2
SSM015L84HN	0-1589467-5
SSM015L85HN	0-1589468-3
SSM025B2H	0-1589700-5
SSM025B44N	0-1589465-1
SSM025B45K	0-1589466-2
SSM025L23N	3-1589462-3
SSM025L2AN	3-1589462-4
SSM025L2AQ	3-1589462-5
SSM025L2GQ	4-1589462-9
SSM025L2HN	3-1589462-6
SSM025L2N	5-1589462-2
SSM025L2SN	3-1589462-8
SSM025L42HN	2-1589463-4
SSM025L44HN	1-1589463-3
SSM025L44KN	1-1589463-4
SSM025L44SN	2-1589463-8
SSM025L45KN	0-1589464-3
SSM025L4HN	1-1589463-5
SSM025L4KN	1-1589463-6
SSM025L4PQ	1-1589463-7
SSM025L4SN	1-1589463-8
SSM037B2	0-1589460-9
SSM037B2H	0-1589700-6
SSM037B2N	1-1589460-2
SSM037L2AQ	3-1589462-9
SSM037L2HN	4-1589462-1
SSM037L2IQ	5-1589462-1
SSM037L42IQ	2-1589463-5
SSM037L42KN	1-1589463-9
SSM037L4KN	2-1589463-0
SSM037L82AQ	0-1589467-6
SSM037L84KN	0-1589467-1
SSM037L85PQ	0-1589468-4
SSM051B2H	0-1589700-1
SSM051L2AQ	4-1589462-3
SSM051L2GQ	5-1589462-0
SSM051L2HN	4-1589462-4
SSM051L2IQ	4-1589462-5
SSM051L42KN	2-1589463-1
SSM051L44KN	2-1589463-2
SSM051L4KN	2-1589463-3
STL009L23N	8-1589483-3
STL009L2AQ	9-1589483-2
STL009L2H	0-1589483-8
STL009L2HN	0-1589483-9
STL009L423N	0-1589484-1
STL009L42CN	9-1589484-0
STL009L42HN	8-1589484-4
STL009L42KN	0-1589484-2
STL009L44KN	9-1589484-3
STL009L4KN	0-1589484-3
STL009L4N	9-1589484-2
STL015B2N	0-1589490-1
STL015B44N	0-1589485-1
STL015L23N	1-1589483-0
STL015L2AN	1-1589483-1
STL015L2AQ	1-1589483-2
STL015L2CN	1-1589483-3
STL015L2HN	1-1589483-4
STL015L2HQ	8-1589483-7
STL015L2N	8-1589483-6
STL015L423N	0-1589484-4
STL015L42KN	0-1589484-5
STL015L44KN	0-1589484-6
STL015L44N	0-1589484-7
STL015L4CQ	0-1589484-8
STL015L4HN	0-1589484-9
STL015L4KN	1-1589484-0
STL025B2	0-1589490-2
STL025B2N	1-1589490-1
STL025B44M	2-1589485-3
STL025L2AN	1-1589483-5
STL025L2AQ	1-1589483-6
STL025L2CN	8-1589483-9
STL025L2HN	1-1589483-7
STL025L2HQ	8-1589483-8
STL025L2JN	1-1589483-8
STL025L42KN	1-1589484-1
STL025L44KN	9-1589484-4
STL025L44N	1-1589484-2
STL025L4HN	1-1589484-3
STL025L4KN	1-1589484-4
STL025L4PQ	8-1589484-6
STL037B2M	1-1589490-3
STL037B42	0-1589485-2
STL037L23N	1-1589483-9
STL037L2AN	2-1589483-0
STL037L2AQ	2-1589483-1
STL037L2HN	2-1589483-2
STL037L2JN	2-1589483-3
STL037L2KN	9-1589483-7
STL037L2N	8-1589483-5
STL037L42KN	8-1589484-2
STL037L44KN	1-1589484-5
STL037L4HN	1-1589484-6
STL051L2AN	9-1589483-4
STL051L2AQ	2-1589483-4
STL051L2CN	2-1589483-5
STL051L2HN	2-1589483-6
STL051L42KN	1-1589484-7
STL051L4HN	1-1589484-8
STL051L4KN	1-1589484-9
STL051L4PQ	8-1589484-7
STL065L2AQ	9-1589483-0
STL065L2HN	2-1589483-7
STL065L2N	2-1589483-8
STL065L42KN	2-1589484-0
STL065L44N	2-1589484-1
STL065L4CQ	2-1589484-2
STL065L4KN	2-1589484-3
STL065T5	0-1589814-1
STM009B2N	1-1589490-2
STM009B42N	0-1589485-3
STM009B44Q	1-1589485-5
STM009H2N	0-1589902-4
STM009L23N	2-1589483-9
STM009L2AN	9-1589483-9
STM009L2AQ	8-1589483-2
STM009L2CN	7-1589483-8
STM009L2HN	3-1589483-0
STM009L2N	3-1589483-1
STM009L2SN	3-1589483-2
STM009L42CN	8-1589484-1
STM009L42HN	2-1589484-4
STM009L42KN	2-1589484-5
STM009L44HN	2-1589484-6
STM009L44PQ	2-1589484-7
STM009L44Q	2-1589484-8
STM009L4AQ	2-1589484-9
STM009L4KN	3-1589484-0
STM009L4PQ	3-1589484-1
STM009L84HN	2-1589486-4
STM009L8HN	1-1589486-7
STM015B2N	0-1589490-3
STM015B42N	0-1589485-4
STM015H2N	0-1589902-3
STM015H5Q	0-1589813-1
STM015L23N	3-1589483-4
STM015L2AQ	3-1589483-5
STM015L2CN	7-1589483-7
STM015L2HN	3-1589483-6
STM015L2HQ	3-1589483-7
STM015L2LQ	3-1589483-8
STM015L2N	3-1589483-9
STM015L2SN	4-1589483-0
STM015L42KN	3-1589484-2
STM015L44AQ	3-1589484-3
STM015L44HN	3-1589484-4
STM015L44KN	3-1589484-5
STM015L44Q	3-1589484-6
STM015L4HN	3-1589484-7
STM015L4KN	3-1589484-8
STM015L4PQ	3-1589484-9
STM015L4SN	8-1589484-8
STM015L82CN	3-1589486-0
STM015L82HN	0-1589486-1
STM015L82IQ	1-1589486-3
STM015L82LQ	2-1589486-1
STM015L84AQ	3-1589486-5
STM015L84CN	3-1589486-2
STM015L84HN	2-1589486-5
STM015L84IQ	3-1589486-4
STM015L84KN	0-1589486-2
STM015L8HN	3-1589486-7
STM025B2N	0-1589490-4
STM025B42N	0-1589485-5
STM025B44	0-1589485-6
STM025B44N	1-1589485-9
STM025B44Q	1-1589485-7
STM025H2N	0-1589902-2
STM025H44N	0-1589817-1
STM025H5N	0-1589813-2
STM025H5Q	0-1589813-3
STM025L2AN	4-1589483-2
STM025L2AQ	4-1589483-3
STM025L2CN	4-1589483-4
STM025L2HN	4-1589483-5
STM025L2HQ	4-1589483-6
STM025L2IQ	4-1589483-7
STM025L2JN	4-1589483-8
STM025L2N	4-1589483-9
STM025L42CN	7-1589484-9
STM025L42KN	4-1589484-0
STM025L44HM	4-1589484-1
STM025L44HN	4-1589484-2
STM025L44KN	4-1589484-3
STM025L44N	4-1589484-4
STM025L44PQ	4-1589484-5
STM025L44Q	4-1589484-6
STM025L4CN	7-1589484-6
STM025L4KN	4-1589484-7
STM025L4LQ	4-1589484-8
STM025L4PN	4-1589484-9
STM025L4PQ	5-1589484-0
STM025L4SN	5-1589484-1
STM025L82CN	2-1589486-9
STM025L82HN	0-1589486-3
STM025L84CN	3-1589486-3
STM025L84KN	0-1589486-4
STM025L8HN	0-1589486-9
STM037B2H	0-1589480-1
STM037B2M	1-1589490-4
STM037B2N	0-1589490-5
STM037B4	2-1589485-0
STM037B42N	0-1589485-8
STM037B42Q	1-1589485-8
STM037B4N	0-1589485-9
STM037H2N	0-1589902-1
STM037L23N	5-1589483-2
STM037L2AN	5-1589483-3
STM037L2AQ	5-1589483-4
STM037L2CN	8-1589483-1
STM037L2HN	5-1589483-5
STM037L2IQ	9-1589483-1
STM037L2KN	9-1589483-8
STM037L2N	8-1589483-4
STM037L2SN	5-1589483-7
STM037L2TQ	9-1589483-5
STM037L42AQ	9-1589484-7
STM037L42HN	5-1589484-2

Dimensions are shown for reference purposes only. Specifications subject to change.

Dimensions are in millimeters unless otherwise specified.

USA: +1 800 522 6752
Asia Pacific: +86 0 400 820 6015
UK: +44 800 267 666

For additional support numbers please visit www.te.com

Part Number Index Cross Reference (Continued)

NANONICS Part Number	TE Part Number
STM037L42K	5-1589484-3
STM037L42KN	5-1589484-4
STM037L42PQ	8-1589484-3
STM037L44DQ	8-1589484-0
STM037L44KN	5-1589484-5
STM037L44N	8-1589484-9
STM037L44PQ	5-1589484-6
STM037L44Q	5-1589484-7
STM037L44SN	5-1589484-8
STM037L4CN	7-1589484-7
STM037L4HN	5-1589484-9
STM037L4KN	6-1589484-0
STM037L4PQ	6-1589484-1
STM037L4SN	9-1589484-6
STM037L82AQ	0-1589486-5
STM037L82HN	1-1589486-2
STM037L82PQ	1-1589486-1
STM037L84AQ	1-1589486-6
STM037L84HN	2-1589486-7
STM037L84N	1-1589486-9
STM037L84PQ	3-1589486-6
STM037L84SN	3-1589486-8
STM037L8HN	4-1589486-0
STM051B2H	0-1589480-2
STM051B2N	0-1589490-6
STM051B2Q	0-1589490-8
STM051B42N	1-1589485-0
STM051B4N	2-1589485-2
STM051H5	0-1589813-4
STM051L23N	5-1589483-9
STM051L2AQ	6-1589483-0
STM051L2CN	6-1589483-2
STM051L2HN	6-1589483-3
STM051L2HQ	6-1589483-4
STM051L2IQ	7-1589483-9
STM051L2JN	6-1589483-5
STM051L2Q	6-1589483-6
STM051L2SN	6-1589483-8
STM051L2TQ	9-1589483-6
STM051L42HN	6-1589484-3
STM051L42KN	6-1589484-4
STM051L42N	6-1589484-5
STM051L44HN	6-1589484-6
STM051L44KN	6-1589484-7
STM051L44PQ	6-1589484-8
STM051L44Q	6-1589484-9
STM051L4CN	7-1589484-8
STM051L4HN	9-1589484-1
STM051L4KN	7-1589484-0
STM051L4PQ	7-1589484-1
STM051L4SN	9-1589484-5
STM051L82AQ	3-1589486-9
STM051L82HN	2-1589486-0
STM051L82IQ	1-1589486-5
STM051L82LQ	2-1589486-2
STM051L84HN	2-1589486-8
STM051L8HN	1-1589486-0

NANONICS Part Number	TE Part Number
STM065B2H	0-1589480-3
STM065B2N	1-1589490-0
STM065B2Q	0-1589490-9
STM065B42N	1-1589485-1
STM065B42Q	2-1589485-1
STM065B44	1-1589485-2
STM065B44N	1-1589485-6
STM065B44Q	1-1589485-3
STM065B4Q	1-1589485-4
STM065L23N	7-1589483-0
STM065L2AQ	7-1589483-1
STM065L2CN	7-1589483-2
STM065L2HN	7-1589483-3
STM065L2IQ	8-1589483-0
STM065L2JN	7-1589483-4
STM065L2KN	7-1589483-5
STM065L42HN	7-1589484-2
STM065L42KN	7-1589484-3
STM065L42N	7-1589484-4
STM065L4KN	7-1589484-5
STM065L82AQ	0-1589486-6
STM065L82HN	0-1589486-7
STM065L82IQ	1-1589486-4
STM065L82LQ	2-1589486-3
STM065L84HN	2-1589486-6
STM065L84IQ	0-1589486-8
STM065L84N	3-1589486-1
STM065L8HN	1-1589486-8

Thru-Hole

SSL005M6SN	0-1589469-6
SSL009M5CN	1-1589470-5
SSL009M6A	3-1589469-5
SSL009M6CN	3-1589469-9
SSL009M6D	0-1589469-7
SSL009M6H	0-1589469-8
SSL009M6SN	0-1589469-9
SSL015M5KN	0-1589470-2
SSL015M6A	3-1589469-6
SSL015M6CN	3-1589469-8
SSL015M6D	1-1589469-0
SSL015M6N	1-1589469-1
SSL015M6SN	4-1589469-5
SSL025M5CN	0-1589470-3
SSL025M6A	3-1589469-7
SSL025M6CN	4-1589469-0
SSL025M6D	1-1589469-2
SSL025M6DQ	1-1589469-3
SSL025M6H	1-1589469-4
SSL025M6HN	1-1589469-5
SSL025M6SQ	1-1589469-6
SSL037M5N	0-1589470-4
SSL037M6SN	4-1589469-1
SSM005M6SN	1-1589469-7
SSM009C5Q	0-1589461-1
SSM009C6Q	0-1589471-1
SSM009M5CN	0-1589470-5
SSM009M5HN	0-1589470-6

NANONICS Part Number	TE Part Number
SSM009M5LQ	0-1589470-7
SSM009M6AQ	1-1589469-8
SSM009M6CN	1-1589469-9
SSM009M6DQ	2-1589469-0
SSM009M6HN	2-1589469-2
SSM009M6SN	2-1589469-4
SSM015C5N	0-1589461-2
SSM015C6N	0-1589471-4
SSM015M5CN	0-1589470-8
SSM015M5LQ	0-1589470-9
SSM015M6HN	2-1589469-5
SSM015M6SN	2-1589469-6
SSM025C6Q	0-1589471-2
SSM025M5CN	1-1589470-0
SSM025M5HN	1-1589470-1
SSM025M5LQ	1-1589470-2
SSM025M5N	1-1589470-4
SSM025M6AQ	4-1589469-6
SSM025M6DQ	2-1589469-7
SSM025M6HN	2-1589469-8
SSM025M6SN	3-1589469-0
SSM037C5Q	0-1589461-4
SSM037C6N	0-1589471-3
SSM037M6HN	3-1589469-2
SSM037M6HQ	4-1589469-2
SSM037M6SN	3-1589469-3
SSM051C5N	0-1589461-3
SSM051M5CN	1-1589470-3
SSM051M6N	4-1589469-4
SSM051M6SN	3-1589469-4
STL009M5CN	4-1589488-8
STL009M5KN	6-1589488-5
STL009M5L	0-1589488-7
STL009M6CN	6-1589487-1
STL009M6HN	7-1589487-8
STL015C5N	0-1589482-6
STL015M5CN	0-1589488-8
STL015M5KN	6-1589488-6
STL015M5SN	5-1589488-1
STL015M6CN	0-1589487-6
STL015M6HN	6-1589487-4
STL015M6KN	7-1589487-5
STL015M6SN	0-1589487-7
STL025C5N	0-1589482-1
STL025C6N	0-1589481-1
STL025M5	1-1589488-0
STL025M5CN	1-1589488-1
STL025M5KN	5-1589488-2
STL025M6	0-1589487-9
STL025M6D	6-1589487-3
STL025M6DQ	1-1589487-0
STL025M6HN	6-1589487-5
STL025M6KN	7-1589487-6
STL025M6N	1-1589487-1
STL025M6SN	1-1589487-2
STL037M5CN	4-1589488-9
STL037M5LQ	1-1589488-3

NANONICS Part Number	TE Part Number
STL037M5Q	1-1589488-4
STL037M6HN	6-1589487-6
STL037M6SN	1-1589487-5
STL051M5CN	1-1589488-5
STL051M5KN	5-1589488-4
STL051M6A	1-1589487-6
STL051M6AN	8-1589487-0
STL051M6HN	6-1589487-7
STL051M6IN	8-1589487-1
STL051M6SN	1-1589487-7
STL065M5KN	5-1589488-3
STL065M6HN	8-1589487-2
STL065M6SN	1-1589487-8
STM009C5N	1-1589482-3
STM009C5Q	1-1589482-5
STM009C6N	0-1589481-2
STM009M5AQ	5-1589488-8
STM009M5CN	1-1589488-6
STM009M5DQ	1-1589488-7
STM009M5HN	1-1589488-8
STM009M5LQ	1-1589488-9
STM009M5PQ	5-1589488-9
STM009M5Q	2-1589488-0
STM009M6AN	1-1589487-9
STM009M6AQ	5-1589487-6
STM009M6CN	6-1589487-9
STM009M6DQ	2-1589487-0
STM009M6HN	2-1589487-1
STM009M6IQ	5-1589487-7
STM009M6SN	2-1589487-2
STM015C5N	0-1589482-7
STM015C6N	0-1589481-3
STM015M5AN	2-1589488-1
STM015M5AQ	7-1589488-1
STM015M5CN	2-1589488-2
STM015M5HN	2-1589488-3
STM015M5KN	2-1589488-4
STM015M5LN	2-1589488-5
STM015M5LQ	2-1589488-6
STM015M5PQ	2-1589488-7
STM015M5SN	6-1589488-7
STM015M6AN	2-1589487-3
STM015M6CN	6-1589487-8
STM015M6DQ	2-1589487-4
STM015M6HN	2-1589487-5
STM015M6IQ	5-1589487-8
STM015M6N	2-1589487-6
STM015M6S	2-1589487-7
STM015M6SN	2-1589487-8
STM015M9AN	0-1589489-1
STM015M9HN	0-1589489-3
STM025C5N	0-1589482-2
STM025C5Q	1-1589482-1
STM025C6N	0-1589481-4
STM025M5AQ	6-1589488-4
STM025M5CN	2-1589488-8
STM025M5HN	2-1589488-9
STM025M5LQ	3-1589488-0

Catalog 1308940
Revised 9-14

www.te.com

Dimensions are shown for reference purposes only. Specifications subject to change.

Dimensions are in millimeters unless otherwise specified.

USA: +1 800 522 6752
Asia Pacific: +86 0 400 820 6015
UK: +44 800 267 666

For additional support numbers please visit www.te.com

Part Number Index Cross Reference (Continued)

NANONICS Part Number	TE Part Number
STM025M5PQ	3-1589488-1
STM025M5SN	3-1589488-2
STM025M6AN	2-1589487-9
STM025M6CN	3-1589487-0
STM025M6DQ	3-1589487-1
STM025M6HN	3-1589487-2
STM025M6IQ	5-1589487-9
STM025M6N	3-1589487-3
STM025M6Q	3-1589487-4
STM025M6SN	3-1589487-5
STM025M9AN	0-1589489-2
STM025M9HN	0-1589489-4
STM037C5	0-1589482-9
STM037C5N	1-1589482-6
STM037C5Q	1-1589482-2
STM037C6N	0-1589481-5
STM037C6Q	0-1589481-9
STM037M5AN	3-1589488-3
STM037M5AQ	5-1589488-7
STM037M5CN	3-1589488-4
STM037M5HN	3-1589488-5
STM037M5N	3-1589488-6
STM037M5PQ	3-1589488-7
STM037M5SN	3-1589488-8
STM037M6AN	3-1589487-6
STM037M6AQ	3-1589487-7
STM037M6CN	7-1589487-9
STM037M6DN	3-1589487-8
STM037M6DQ	3-1589487-9
STM037M6HN	4-1589487-0
STM037M6IQ	6-1589487-0
STM037M6SN	4-1589487-1
STM037M6SQ	4-1589487-2
STM051C5	1-1589482-0
STM051C5N	0-1589482-3
STM051C5Q	0-1589482-4
STM051C6N	0-1589481-6
STM051M5AQ	3-1589488-9
STM051M5CN	4-1589488-0
STM051M5DQ	4-1589488-1
STM051M5LQ	4-1589488-2
STM051M5PQ	4-1589488-3
STM051M5SN	6-1589488-8
STM051M6CN	4-1589487-3
STM051M6DQ	4-1589487-4
STM051M6HN	4-1589487-5
STM051M6N	7-1589487-2
STM051M6PQ	4-1589487-6
STM051M6SN	4-1589487-7
STM051M6SQ	4-1589487-8
STM065C5M	0-1589482-8
STM065C5N	1-1589482-4
STM065C5Q	0-1589482-5
STM065C6	0-1589481-7
STM065C6N	0-1589481-8
STM065M5AQ	7-1589488-0
STM065M5CN	4-1589488-4

NANONICS Part Number	TE Part Number
STM065M5FN	5-1589488-5
STM065M5HN	5-1589488-0
STM065M5IQ	7-1589488-2
STM065M5LQ	4-1589488-6
STM065M5N	4-1589488-7
STM065M5SN	6-1589488-9
STM065M6	5-1589487-0
STM065M6AQ	7-1589487-3
STM065M6CN	5-1589487-1
STM065M6HN	5-1589487-3
STM065M6KN	6-1589487-2
STM065M6SN	5-1589487-4

Flex Termination "Duckbill"

STL00911378PC	0-1589066-3
STL00911378PCN	0-1589066-4
STL00911378SCN	0-1589067-1
STL01511378PCN	0-1589066-5
STL02511378PCN	0-1589066-6
STL02511378SCN	0-1589067-2
STL03711378PC	2-1589066-4
STL03711378PCN	0-1589066-7
STL05111378PCN	0-1589066-8
STL05111378SCHN	0-1589067-3
STL06511378PC	0-1589066-9
STL06511378PCN	1-1589066-0
STL06511378SCN	0-1589067-4
STM00911378PCN	1-1589066-1
STM00911378SCN	0-1589067-6
STM01511378PCN	2-1589066-3
STM01511378SCN	0-1589067-7
STM02511378PC	1-1589066-2
STM02511378PCN	1-1589066-3
STM02511378SCN	0-1589067-8
STM03711378PCN	1-1589066-4
STM03711378PCQ	1-1589066-5
STM03711378SCN	1-1589067-2
STM05111378PC	1-1589066-6
STM05111378PCM	1-1589066-7
STM05111378PCN	1-1589066-8
STM05111378PCQ	1-1589066-9
STM05111378SCN	0-1589067-9
STM06511378PC	2-1589066-2
STM06511378PCN	2-1589066-0
STM06511378PCQ	2-1589066-1
STM06511378SCN	1-1589067-0

NANONICS Part Number	TE Part Number
Solder Cup Termination	
SSL00511500PCN	0-1589051-1
SSL00511500SCN	0-1589052-1
SSL00911500PC	0-1589051-2
SSL00911500PCN	0-1589051-3
SSL00911500SCN	0-1589052-2
SSL01511500PCM	0-1589051-4
SSL01511500PCN	0-1589051-5
SSL01511500SCN	0-1589052-3
SSM00511500PC	1-1589051-4
SSM00511500PCH	0-1589051-6
SSM00511500PCN	0-1589051-7
SSM00511500SCN	0-1589052-4
SSM00911500PC	0-1589051-8
SSM00911500PCN	0-1589051-9
SSM00911500SCN	1-1589052-1
SSM01511500PCN	1-1589051-0
SSM01511500SC	0-1589052-5
SSM01511500SCN	1-1589052-0
SSM02511500SCQ	0-1589052-7
SSM03711500PC	1-1589051-1
SSM03711500PCN	1-1589051-2
SSM05111500PCN	1-1589051-3
SSM05111500SCN	0-1589052-8
STL00911500PC	2-1589053-2
STL00911500PCN	0-1589053-1
STL00911500SCN	0-1589054-1
STL01511500PC	2-1589053-1
STL01511500PCN	0-1589053-2
STL01511500SCN	0-1589054-2
STL02511500PC	0-1589053-3
STL02511500PCN	0-1589053-4
STL02511500SC	0-1589054-3
STL03711500PCN	0-1589053-5
STL03711500SCN	0-1589054-4
STL05111500PCN	0-1589053-6
STL06511500PCN	1-1589053-8
STM00911500PCN	0-1589053-7
STM00911500SCN	0-1589054-5
STM01511500PCN	0-1589053-8
STM01511500PCQ	0-1589053-9
STM01511500SCHN	0-1589054-6
STM01511500SCN	0-1589054-7
STM01511500SCQ	1-1589054-4
STM02511500PC	1-1589053-0
STM02511500PCN	1-1589053-1
STM02511500PCQ	2-1589053-3
STM02511500SC	0-1589054-8
STM02511500SCN	0-1589054-9
STM03711500PCN	1-1589053-2
STM03711500PCQ	1-1589053-3
STM03711500SCN	1-1589054-0
STM05111500PCN	1-1589053-4
STM05111500PCQ	1-1589053-5
STM05111500SCN	1-1589054-1
STM05111500SCQ	1-1589054-5
STM06511500PC	1-1589053-6

NANONICS Part Number	TE Part Number
STM06511500PCN	1-1589053-7
STM06511500SCN	1-1589054-2
STM06511500SCQ	1-1589054-6
Panel Mount	
PSM005SC2DC024N	0-1589851-2
PSM009SC2DC060N	0-1589851-1
PTM009SC2DC060N	0-1589050-7
PTM015SC2DC024N	0-1589050-4
PTM015SC2DC060N	0-1589050-5
PTM025SC2DC060N	0-1589050-6
PTM037SC2DC018N	0-1589050-3
PTM065SC2DC018N	0-1589050-2

Catalog 1308940
Revised 9-14

www.te.com

Dimensions are shown for reference purposes only. Specifications subject to change.

Dimensions are in millimeters unless otherwise specified.

USA: +1 800 522 6752
Asia Pacific: +86 0 400 820 6015
UK: +44 800 267 666

For additional support numbers please visit www.te.com

NANONICS Strip Connectors Introduction

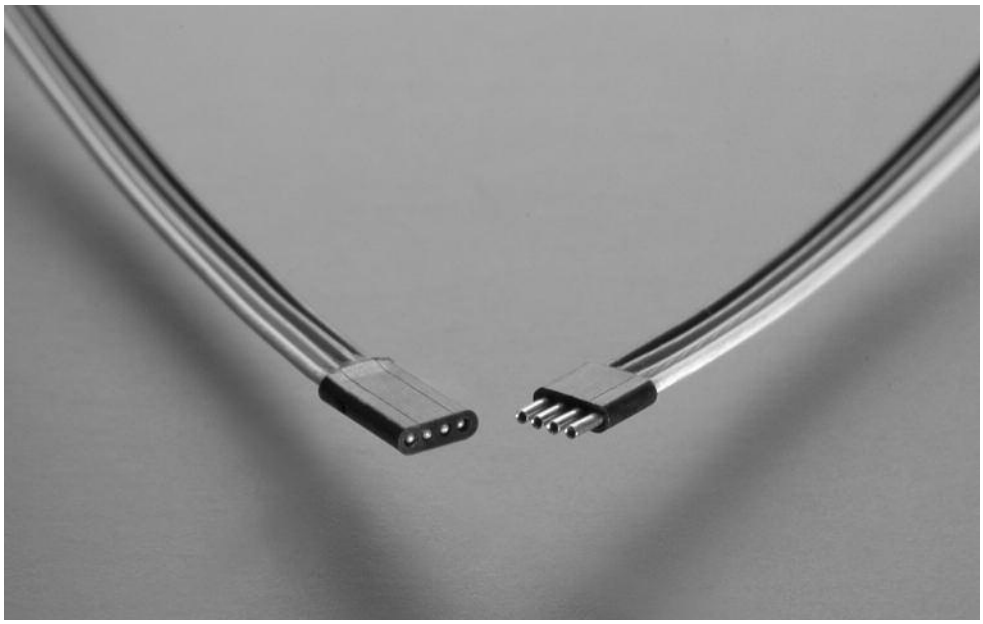

The NANONICS strip connectors are the smallest connectors in the NANONICS product line. They are molded from LCP and are ideal for applications where the height and weight of the connector is a serious design parameter. Just .040" in height, these connectors are well suited for low-profile applications. Standard sizes are 4, 9, and 15, while 25, 37, and 51 are also available upon request. Standard configurations include wired, surface mount, or thru-hole terminations.

Guide pins are available for polarization. Harness assemblies and custom configurations can also be accommodated.

Polarization

Polarization of the strips is accomplished with the use of optional polarizing guide posts.

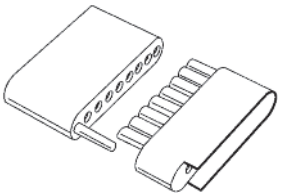

Polarization Position
"T" Shown

Catalog 1308940
Revised 9-14

www.te.com

Dimensions are shown for reference purposes only. Specifications subject to change.

Dimensions are in millimeters unless otherwise specified.

USA: +1 800 522 6752
Asia Pacific: +86 0 400 820 6015
UK: +44 800 267 666

For additional support numbers please visit www.te.com

NANONICS Wired Connectors — Unshrouded, Flying Leads

Product Facts

- Plastic Shell
- Standard Sizes: 4, 9, 15, 25, 37 and 51
- Polarization positions are optional
- Factory wired to your specifications
- Contact TE Connectivity for custom configurations

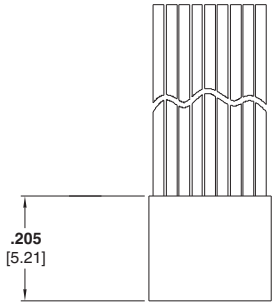

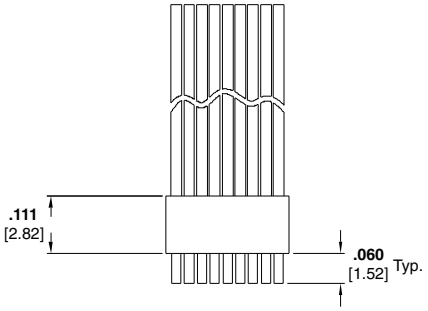

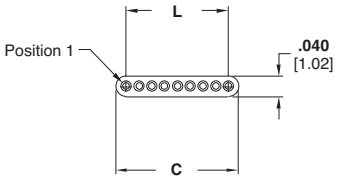

Plug Assembly
Drawing Number 1589448

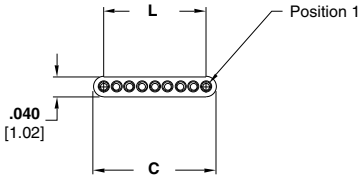

Receptacle Assembly
Drawing Number 1589449

Size	Dimensions	
	C	L
4	**0.115** [2.92]	**0.075** [1.91]
9	**0.240** [6.10]	**0.200** [5.08]
15	**0.390** [9.91]	**0.350** [8.89]
25	**0.640** [16.26]	**0.600** [15.24]
37	**0.940** [23.88]	**0.900** [22.86]
51	**1.290** [32.77]	**1.250** [31.75]

Catalog 1308940
Revised 9-14

www.te.com

Dimensions are shown for reference purposes only. Specifications subject to change.

Dimensions are in millimeters unless otherwise specified.

USA: +1 800 522 6752
Asia Pacific: +86 0 400 820 6015
UK: +44 800 267 666

For additional support numbers please visit www.te.com

Part Numbering Guideline for NANONICS Strip Wired Connectors

Strip Connectors - Wire Terminations

USS XXX XX X XX XXX X

Class/Row/Type

USS Unshrouded, 1 row, strip

Positions

004 4 Position
009 9 Position
015 15 Position
025 25 Position

Configuration

PC Plug
SC Receptacle

Conductor Size/Strands

0 28 AWG Solid
1 30 AWG Solid
2 30 AWG 7 Strand
3 32 AWG 7 Strand
4 34 AWG 7 Strand

Polarization (optional)

Plug contains guide post
Receptacle accepts guide post

Conductor Length

XXX Three numbers only, length is in inches (i.e. 012 = twelve inches)
CXX A “C” followed by two numbers, length is in centimeters (i.e. C06 = 6 centimeters)
MXX An “M” followed by two numbers, length is in meters (i.e. M02 = 2 meters)

Conductor Type

DX White PTFE
DC Color Coded PTFE
DM Color Coded PTFE per MIL-STD-681
DT White Tefzel per M22759/33

Polarization (Strip Type Only)

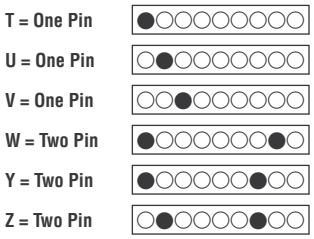

Catalog 1308940
Revised 9-14

www.te.com

Dimensions are shown for reference purposes only. Specifications subject to change.

Dimensions are in millimeters unless otherwise specified.

USA: +1 800 522 6752
Asia Pacific: +86 0 400 820 6015
UK: +44 800 267 666

For additional support numbers please visit www.te.com

NANONICS Surface Mount Connectors — Unshrouded

Product Facts

- Plastic Shell
- Standard Sizes: 4, 9, 15, 25, 37 and 51
- Polarization positions are optional
- Contact TE Connectivity for custom configurations
- Suggested Pad Layouts are available on the referenced drawings on the TE website

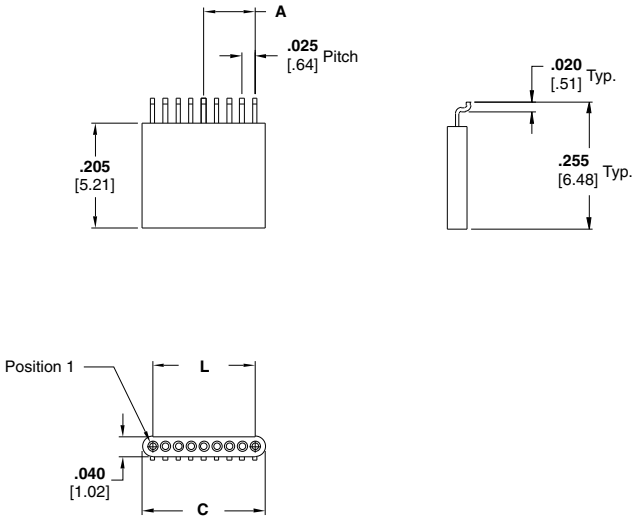

Plug Assembly
Drawing Number 1589451

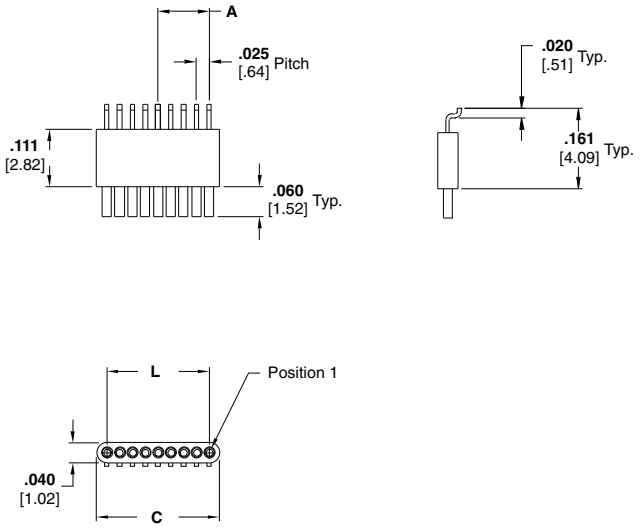

Receptacle Assembly
Drawing Number 1589452

Size	Dimensions		
	A	C	L
4	**0.0375** [.95]	**0.115** [2.92]	**0.075** [1.91]
9	**0.1000** [2.54]	**0.240** [6.10]	**0.200** [5.08]
15	**0.1750** [4.45]	**0.390** [9.91]	**0.350** [8.89]
25	**0.3000** [7.62]	**0.640** [16.26]	**0.600** [15.24]
37	**0.4500** [11.43]	**0.940** [23.88]	**0.900** [22.86]
51	**0.6250** [15.88]	**1.290** [32.77]	**1.250** [31.75]

Dimensions are shown for reference purposes only. Specifications subject to change.

Dimensions are in millimeters unless otherwise specified.

USA: +1 800 522 6752
Asia Pacific: +86 0 400 820 6015
UK: +44 800 267 666

For additional support numbers please visit www.te.com

NANONICS Thru-Hole Connectors — Unshrouded, Horizontal, 1 Row to 2 Row, .050 Spacing

Product Facts

- Plastic Shell
- Standard Sizes: 4, 9, 15, 25, 37 and 51
- Polarization positions are optional
- Contact TE Connectivity for custom configurations
- Suggested Thru-Hole Layouts are available on the referenced drawings on the TE website

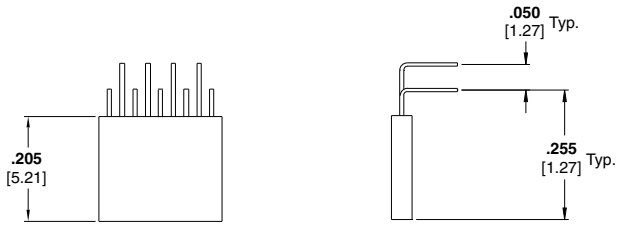

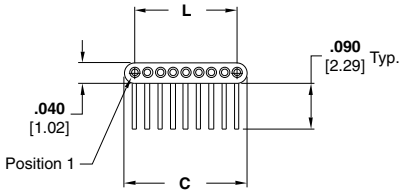

Plug Assembly
Drawing Number 1589453

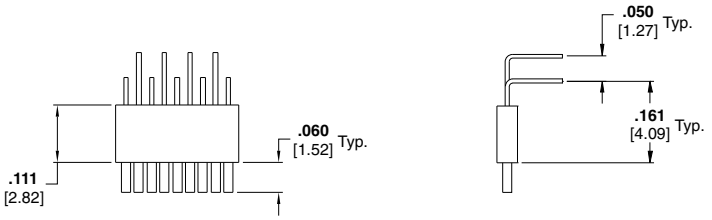

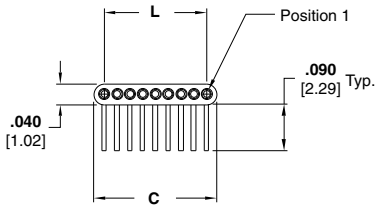

Receptacle Assembly
Drawing Number 1589454

Size	Dimensions	
	C	L
4	**0.115** [2.92]	**0.075** [1.91]
9	**0.240** [6.10]	**0.200** [5.08]
15	**0.390** [9.91]	**0.350** [8.89]
25	**0.640** [16.26]	**0.600** [15.24]
37	**0.940** [23.88]	**0.900** [22.86]
51	**1.290** [32.77]	**1.250** [31.75]

Catalog 1308940
Revised 9-14

www.te.com

Dimensions are shown for reference purposes only. Specifications subject to change.

Dimensions are in millimeters unless otherwise specified.

USA: +1 800 522 6752
Asia Pacific: +86 0 400 820 6015
UK: +44 800 267 666

For additional support numbers please visit www.te.com

Part Numbering Guideline for NANONICS Surface Mount and Thru-Hole Termination

Strip Connectors - Surface Mount and Thru-Hole Terminations

USS XXX XX X

Class/Row/Type

USS Unshrouded, 1 row, strip

Positions

004 4 Position
009 9 Position
015 15 Position
025 25 Position

Configuration

B2 Plug, Horizontal SMT
L2 Receptacle, Horizontal SMT
C6 Plug, Horizontal Mount, Thru-Hole
M6 Receptacle, Horizontal Mount, Thru-Hole

Polarization (optional)

Plug contains guide post
Receptacle accepts guide post

Polarization (Strip Type Only)

T = One Pin
U = One Pin
V = One Pin
W = Two Pin
Y = Two Pin
Z = Two Pin

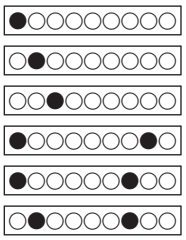

Catalog 1308940
Revised 9-14

www.te.com

Dimensions are shown for reference purposes only. Specifications subject to change.

Dimensions are in millimeters unless otherwise specified.

USA: +1 800 522 6752
Asia Pacific: +86 0 400 820 6015
UK: +44 800 267 666

For additional support numbers please visit www.te.com

Part Number Index Cross Reference

NANONICS Part Number	TE Part Number
Wire Terminations	
USS004PC2DC003	0-1589448-1
USS004PC2DC006	0-1589448-2
USS004PC2DC006T	5-1589448-5
USS004PC2DC008	6-1589448-8
USS004PC2DC012	0-1589448-3
USS004PC2DC012T	0-1589448-4
USS004PC2DC012U	0-1589448-5
USS004PC2DC024	0-1589448-6
USS004PC2DC036	0-1589448-7
USS004PC2DC036T	0-1589448-8
USS004PC2DCC20T	5-1589448-9
USS004PC2DCC30	0-1589448-9
USS004PC2DCM01	5-1589448-7
USS004PC2DM012T	7-1589448-2
USS004PC2DM024T	7-1589448-6
USS004PC2DMC30	6-1589448-9
USS004PC2DMC40	7-1589448-1
USS004PC2DMC50	6-1589448-7
USS004PC2DMM01	6-1589448-0
USS004PC2DMM02	6-1589448-1
USS004PC2DNC40	1-1589448-0
USS004PC2DX006	1-1589448-1
USS004PC2DX012	1-1589448-2
USS004PC2GX006	1-1589448-3
USS004PC2GX024	1-1589448-4
USS004PC3DC018	1-1589448-5
USS004PC4DXC10	7-1589448-0
USS004SC2DC002	0-1589449-1
USS004SC2DC003	0-1589449-2
USS004SC2DC003T	0-1589449-3
USS004SC2DC004	0-1589449-4
USS004SC2DC006	0-1589449-5
USS004SC2DC006T	6-1589449-2
USS004SC2DC008	8-1589449-0
USS004SC2DC012	0-1589449-6
USS004SC2DC012T	0-1589449-7
USS004SC2DC012U	0-1589449-8
USS004SC2DC024	0-1589449-9
USS004SC2DC036	1-1589449-0
USS004SC2DC048	1-1589449-1
USS004SC2DCC20T	7-1589449-1
USS004SC2DCC30	1-1589449-2
USS004SC2DCM01	6-1589449-7
USS004SC2DM012T	8-1589449-4
USS004SC2DM024T	8-1589449-9
USS004SC2DMC30	8-1589449-1
USS004SC2DMC40	8-1589449-3
USS004SC2DMC50	7-1589449-9
USS004SC2DMM01	7-1589449-2
USS004SC2DMM02	7-1589449-3
USS004SC2DNC40	1-1589449-3
USS004SC2DTC20T	8-1589449-5
USS004SC2DX006	1-1589449-4
USS004SC2DX012T	1-1589449-5
USS004SC2GX006	1-1589449-6
USS004SC2GX024	1-1589449-7

NANONICS Part Number	TE Part Number
USS004SC3DC018	1-1589449-8
USS004SC3DX004T	1-1589449-9
USS004SC4DXC30	8-1589449-2
USS009PC0DC006T	1-1589448-6
USS009PC2DC006	1-1589448-7
USS009PC2DC006W	1-1589448-8
USS009PC2DC008U	5-1589448-2
USS009PC2DC012	1-1589448-9
USS009PC2DC012T	2-1589448-0
USS009PC2DC012V	2-1589448-1
USS009PC2DC018V	2-1589448-2
USS009PC2DC024	2-1589448-3
USS009PC2DC036	2-1589448-4
USS009PC2DC036T	2-1589448-5
USS009PC2DC036U	2-1589448-6
USS009PC2DC036V	2-1589448-7
USS009PC2DCC05T	2-1589448-8
USS009PC2DCM01	5-1589448-8
USS009PC2DM012T	7-1589448-5
USS009PC2DM024T	7-1589448-7
USS009PC2DX001	2-1589448-9
USS009PC2DX004T	3-1589448-0
USS009PC2DX006T	3-1589448-1
USS009PC2DX012	3-1589448-2
USS009PC2GX006	3-1589448-3
USS009PC2GX012	3-1589448-4
USS009PC3DC036	6-1589448-5
USS009SC0DC006T	7-1589449-0
USS009SC2DC004	2-1589449-0
USS009SC2DC006	2-1589449-1
USS009SC2DC006W	2-1589449-2
USS009SC2DC006Z	2-1589449-3
USS009SC2DC008	2-1589449-4
USS009SC2DC012	2-1589449-5
USS009SC2DC012T	2-1589449-6
USS009SC2DC012Z	2-1589449-7
USS009SC2DC018	2-1589449-8
USS009SC2DC018T	2-1589449-9
USS009SC2DC018V	6-1589449-3
USS009SC2DC024	3-1589449-0
USS009SC2DC025T	3-1589449-1
USS009SC2DC036T	3-1589449-2
USS009SC2DC036U	3-1589449-3
USS009SC2DC036V	3-1589449-4
USS009SC2DC036W	3-1589449-5
USS009SC2DC060T	3-1589449-6
USS009SC2DCC05T	3-1589449-7
USS009SC2DCM01	6-1589449-8
USS009SC2DCM01T	3-1589449-8
USS009SC2DM012T	8-1589449-8
USS009SC2DM024T	9-1589449-0
USS009SC2DT012T	9-1589449-1
USS009SC2DX004T	3-1589449-9
USS009SC2DX006T	4-1589449-0
USS009SC2DX012	4-1589449-1
USS009SC2GX006	4-1589449-2
USS009SC2GX012	4-1589449-3

NANONICS Part Number	TE Part Number
USS009SC3DC036	7-1589449-6
USS009SC3DX004T	4-1589449-4
USS015PC1DC036T	7-1589448-3
USS015PC1DC036W	7-1589448-4
USS015PC2DC006	3-1589448-5
USS015PC2DC012	3-1589448-6
USS015PC2DC012T	3-1589448-7
USS015PC2DC012V	3-1589448-8
USS015PC2DC018	3-1589448-9
USS015PC2DC018V	5-1589448-6
USS015PC2DMC60T	4-1589448-0
USS015PC2DX004T	4-1589448-1
USS015PC2DX012	4-1589448-2
USS015PC2DX024T	4-1589448-3
USS015PC3DC036	6-1589448-6
USS015SC1DC036T	8-1589449-6
USS015SC1DC036W	8-1589449-7
USS015SC2DC006	4-1589449-6
USS015SC2DC012	4-1589449-7
USS015SC2DC012T	4-1589449-8
USS015SC2DC018V	6-1589449-4
USS015SC2DC024T	6-1589449-1
USS015SC2DC036	7-1589449-8
USS015SC2DC036T	4-1589449-9
USS015SC2DMC60T	5-1589449-0
USS015SC2DX004T	5-1589449-1
USS015SC2DX006T	6-1589449-5
USS015SC2DX018T	5-1589449-2
USS015SC3DC036	7-1589449-7
USS015SC3DX004T	5-1589449-3
USS025PC2DC006	4-1589448-4
USS025PC2DC012	6-1589448-2
USS025PC2DT006T	5-1589448-3
USS025PC2DX018T	4-1589448-5
USS025SC2DC006	5-1589449-4
USS025SC2DC012	7-1589449-4
USS025SC2DT006T	5-1589449-9
USS037PC1DXC20	4-1589448-6
USS037PC2DC006	4-1589448-7
USS037PC2DC012	6-1589448-4
USS037PC2DC020T	4-1589448-8
USS037PC2DNC50	4-1589448-9
USS037PC2DT006T	5-1589448-4
USS037SC1DXC20	5-1589449-5
USS037SC1DY006	6-1589449-6
USS037SC2DC006	5-1589449-6
USS037SC2DC012	7-1589449-5
USS037SC2DC036T	6-1589449-9
USS037SC2DT006T	6-1589449-0
USS037SC2DX006T	5-1589449-7
USS051PC2DC012	5-1589448-0
USS051PC2DX012	5-1589448-1
USS051SC2DC012	5-1589449-8

NANONICS Part Number	TE Part Number
Surface Mount	
USS004B2	0-1589451-1
USS004B2T	0-1589451-2
USS004B4	0-1589775-1
USS004B45T	0-1589450-1
USS004B4T	3-1589683-2
USS004L2	0-1589452-1
USS004L2T	0-1589452-2
USS009B2	0-1589451-3
USS009B2T	0-1589451-5
USS009B2TE	1-1589451-5
USS009B2Z	0-1589451-6
USS009B43T	5-1589683-6
USS009B4T	5-1589683-7
USS009L2	0-1589452-3
USS009L2T	0-1589452-4
USS009L2U	0-1589452-5
USS009L2V	0-1589452-6
USS015B2	0-1589451-8
USS015B2T	0-1589451-9
USS015B4T	7-1589683-6
USS015L2	0-1589452-7
USS015L2T	0-1589452-8
USS015L2V	0-1589452-9
USS025B2	1-1589451-0
USS025B4T	8-1589683-6
USS025L2	1-1589452-0
USS025L4T	8-1589683-7
USS037B2	1-1589451-1
USS037B2T	1-1589451-4
USS037L2	1-1589452-1
USS037L2T	1-1589452-2
USS051B2	1-1589451-3
USS051L2	1-1589452-3
Thru-Hole	
USS004C6	0-1589453-1
USS004C6T	0-1589453-6
USS004M6	0-1589454-1
USS009C6	0-1589453-2
USS009C6T	0-1589453-3
USS009C6V	0-1589453-4
USS009M6	0-1589454-2
USS015C6	0-1589453-5

Dimensions are shown for reference purposes only. Specifications subject to change.

Dimensions are in millimeters unless otherwise specified.

USA: +1 800 522 6752
Asia Pacific: +86 0 400 820 6015
UK: +44 800 267 666

For additional support numbers please visit www.te.com

MICRODOT Microminiature Connectors Introduction

MICRODOT Connector products have a sixty-year heritage of leadership in precision design and manufacturing of innovative interconnects. These products offer interconnect solutions for a broad range of applications in the Military, Aerospace, Marine, and Space Industries.

The MICRODOT reputation for hands-on experience and outstanding technical support is now enhanced as part of TE Connectivity Corporation.

From standard Mil-Spec configurations to custom designs, we have the Micro-D, subminiature and ultra-miniature coaxial, and cylindrical connectors to meet your need, whether it is build-to-print assemblies, or total turn-key assembly program management. MICRODOT connectors have met the rigorous demands imposed in manned space flight, military and commercial satellites, and geophysical exploration.

Catalog 1308940
Revised 9-14

www.te.com

Dimensions are shown for reference purposes only. Specifications subject to change.

Dimensions are in millimeters unless otherwise specified.

USA: +1 800 522 6752
Asia Pacific: +86 0 400 820 6015
UK: +44 800 267 666

For additional support numbers please visit www.te.com

MICRODOT Microminiature D Connectors Introduction

Product Facts

- **Designed for both military and commercial applications**
- **Low engaging force is achieved by the manner in which Twist Pin Contacts are designed**
- **The metal shell and plastic shell are available with solder cup and solid or stranded wire terminations**
- **Mating force maximum is 10 oz. [2.78N] times the number of contacts**
- **Durability — No known mechanical or electrical issues detrimental to the function of the connectors after 500 cycles of mating and unmating**
- **Current Rating — 3 amps max per contact**

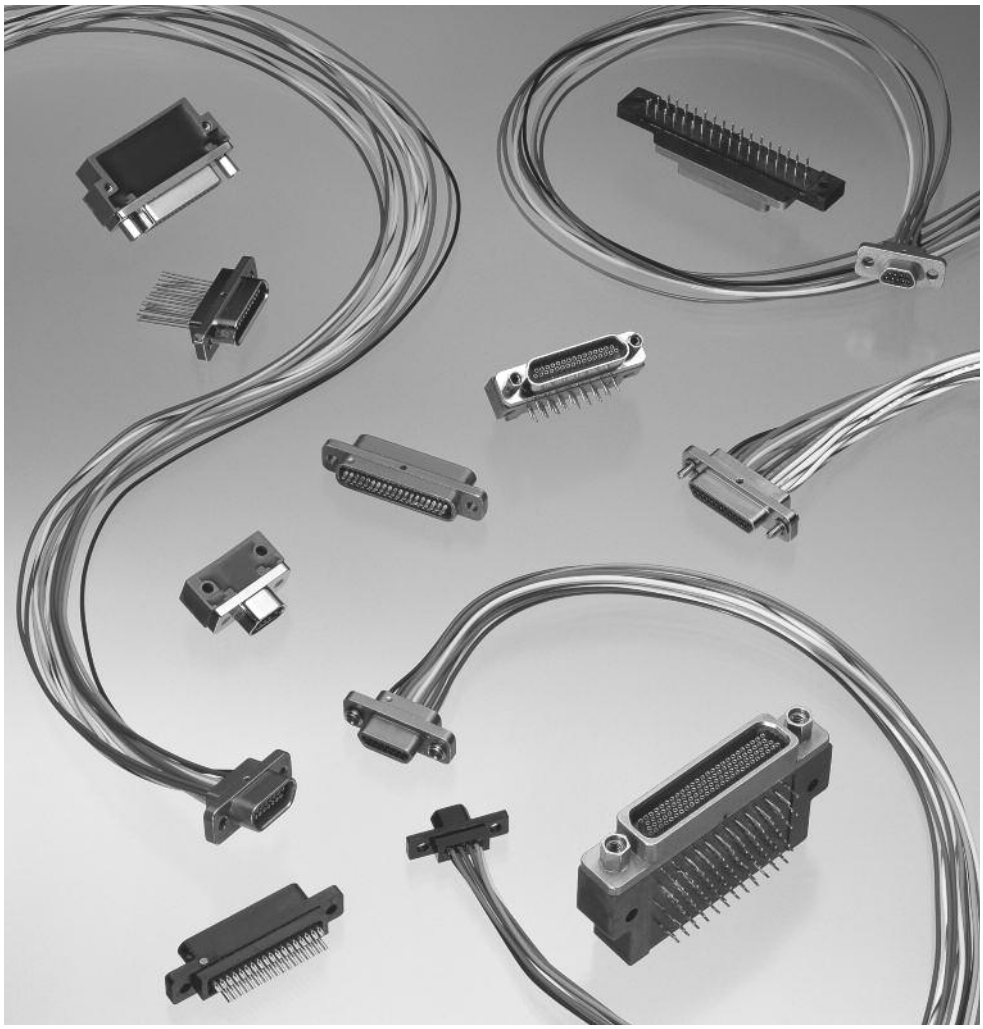

MICRODOT Connectors MCK and MCD High Density Microminiature "D" Connectors described in this catalog comprise a complete connector system, which is adaptable to a numerous variety of form factors. Low engaging force is achieved by the manner in which the twist pin contacts are designed. By constructing the male contact as a breathing helical spring, electrical contact is achieved at many points around the periphery of the pin bundle rather than at a few discrete points, as in conventional pin designs. Normal twist pin engagement force is 6 oz. [1.67N] typically and 8 oz. [2.22N] maximum. The low force twist pins exhibit an engaging force of 4 oz. [1.11N] typically and 5 oz. [1.39N] maximum.

The MCK and MCD Series of connectors featured in this catalog are designed to meet the applicable requirements of MIL-DTL-83513, for intermateability, interchangeability, and performance. Designed for both military and commercial applications, the MCK's and MCD's are especially well suited for use in miniaturized airborne and space electronics, computers, and test equipment. The metal shell MCK's and plastic shell MCD's are available with solder cup, and solid or stranded wire terminations. MCK transition blocks are standard for printed circuit board mounting. Custom termination configurations for both MCK and MCD can be accommodated. Micro D's are also supplied in wired harness assemblies.

Dimensions are shown for reference purposes only. Specifications subject to change.

Dimensions are in millimeters unless otherwise specified.

USA: +1 800 522 6752
Asia Pacific: +86 0 400 820 6015
UK: +44 800 267 666

For additional support numbers please visit www.te.com

MICRODOT MCK/MCD/MCDM Series Metal and Plastic Shell Connectors

Technical and Performance Data
(Applicable to MCK, MCD and MCDM unless otherwise noted)

Electrical

Contacts — Pin 24 AWG twist pin, Socket 24 AWG precision machined barrel or Stamped and Formed 24 AWG Pin and Socket. Wire Range 24 AWG to 30 AWG solid and stranded.

Contact Resistance — (voltage drop) 25 millivolts max. at 3 amps, 77°± 7.4°F [25°± 3° C].

Current Rating — 3 amps max. per contact.

Dielectric Withstanding Voltage — Volts RMS 60 Hz at room ambient.
At sea level 600V
At 70,000 ft. [21,336 m] 150V

Insulation Resistance — 5,000 megohms min. (@ 500 VDC) at ambient room temperature.

Magnetic Permeability — 2 mu max.

Mechanical

Contact Spacing — .050 [1.27mm] centers.

Contact Engagement & Separation — Standard contact engaging force is 6.0 oz. [1.67N] (8.0 oz. [2.22N] max.). Separation force is 0.5 [.14N] oz. min.

Mating Force Maximum — Calculated as 10 oz. times the number of contacts.

Environmental

Temperature Range — -67°F to 257°F [-55° C to +125°C] for MCK/MCD, -67°F to 302°F [-55°C to +150°C] for MCDM.

Vibration — No discontinuity in excess of 1 µ second when tested in accordance with EIA-364-28, test condition IV.

Solderability — Connectors shall pass the test requirements of MIL-STD-202, Method 208

Shock — No discontinuity in excess of 1 µ second when tested in accordance with EIA-364-27, test condition E.

Durability — No mechanical or electrical defects detrimental to the function of the connectors after 500 cycles of mating and unmating.

Humidity — After exposure to humidity as specified EIA-364-31, Method II, IR shall be 1 megohm minimum following step 7a of EIA-364-31 section 4.3.6.1 and 1000 megohms minimum after 24 hours of conditioning per EIA-364-31.

Salt Spray — Connectors shall meet the performance requirements of contact resistance, mating and unmating forces, and contact retention after being subjected to the 48 hour 5% solution salt spray test per EIA-364-26,Condition B.

Fluid Immersion — Unmated connectors after being fully immersed in one of the following fluids, for the prescribed time, will mate at a force of 10 oz. [2.78N] times the number of contacts or less: Perchloroethylene, 2 hours; Lubricating oil per MIL-L-23699, 20 hours.

Insert Retention — Inserts will withstand a 50 lb. [34N/cm^2] per square inch load in either direction.

Crimp Termination Tensile Strength — (Unassembled contacts with crimped stranded wire terminations) Wires will not pull out of contacts when the following axial loads are applied: 24 AWG, 5 lbs. [22.24N]; 26 AWG, 4 lbs. [17.79N]; 28 AWG, 3 lbs. [13.34N]

Outgassing — When tested in accordance with SP-R-0022, Total Mass Loss (TML) shall be less than 1.0% and Volatile Condensable Material (VCM) shall be less than 0.1% of the original specimen.

Materials and Finishes

Contacts — Copper alloy plated with .000050 [.00127] gold over copper flash per MIL-G-45204 Type II.

Hardware — see pages 5-61 and 5-62.

MCK-Metal Shell —

Insulator — Liquid crystal polymer (LCP) per ASTM D5138, or Polyphenylene sulfide per ASTM D4067 or MIL-M-24519

Interfacial Seal — Fluorosilicone Rubber per MIL-R-25988 (socket side only)

Body Shell — Aluminum alloy-high grade plated

Cadmium per QQ-P-416

Nickel, electroless per AMS 2404

Transition Block Shell —

Liquid crystal polymer (LCP) per ASTM D5138, or Polyphenylene sulfide per ASTM D4067 or MIL-M-24519

Potting Material — Epoxy, Black

MCD-Plastic Shell —

Insulator/Body — Polyester, glass filled per MIL-M-24519, Liquid crystal polymer (LCP) per ASTM D5138, or Polyphenylene sulfide per ASTM D4067 or MIL-M-24519

Wire Terminations —

Solid copper per QQ-W-343 gold plated per MIL-DTL-45204

Stranded PTFE insulated per MIL-W-16878

Stranded PTFE insulated per MIL-W-22759/11, /33

Solid copper per QQ-W-343, solder dipped (Transition block)

MCDM-Metal Shell —

Insulator — Diallyl Phthalate per MIL-M-14, Type SDG-F

Body Shell — Aluminum alloy—high grade, nickel plated

Twist Pin, Pin and Socket Contacts

The contact spring member normally found in socket contacts has been eliminated by creating a breathing helical spring principle on the pin contact — smaller, more durable contacts can be manufactured economically.

Wire range 24-36 AWG solid & stranded.

MIL-DTL-83513 — Only the descriptive legend in bold italic is applicable to current MIL-DTL-83513 configurations; MIL-DTL-83513/1 through /4 — MCKS metal shell; MIL-DTL-83513/6 through /9 — MCD plastic shell.

In addition, MIL-DTL-83513 solid copper wire termination is specified 25 AWG, 0.5; and 1.0 [25.4] lengths only and stranded insulated wire termination is specified 26 AWG, 18.0 [457.2] and 36.0 [914.4] lead lengths only. Hardware for MIL-DTL-83513 configurations is specified separately by the M83513/5-XX designation. M83513/1 through /4 and /6 through /9 specify no hardware (B). Mounting/mating hardware is shown on page 5-61 with the applicable military nomenclature. The MICRODOT catalog part number for a MIL-DTL-83513 configuration may be constructed to include the desired hardware.

See pages 5-78 through 5-82 for M83513/ cross reference.

Catalog 1308940
Revised 9-14

www.te.com

Dimensions are shown for reference purposes only. Specifications subject to change.

Dimensions are in millimeters unless otherwise specified.

USA: +1 800 522 6752
Asia Pacific: +86 0 400 820 6015
UK: +44 800 267 666

For additional support numbers please visit www.te.com

MICRODOT How To Specify MCK and MCD Connectors

Metal Shell

MCK — N1 — B — 37 P 6 A 1 — 18.0

S — Solder pots 26 AWG max.

X — Special, not described by legend.

Connector Series

MCK — Twist Pin & Drawn Socket
MCKS — Stamp & Formed Pin & Socket

Shell Finish

C1 — Cadmium, Clear
C2 — Cadmium, Yellow Chromate
N1 — Nickel, Electroless

Hardware (See Pages 5-79 and 5-80)

B — No Hardware
F — Float Bushing
KM — Jackscrew, Slotted Head, High Profile (9-51)
HM — Jackscrew, Slotted Head, High Profile (100)
LM — Jackscrew, Slotted Head, Low Profile (9-51)
JM — Jackscrew, Slotted Head, Low Profile (100)
QM — Jackscrew, Allen Head, High Profile (9-51)
TM — Jackscrew, Allen Head, High Profile (100)
RM — Jackscrew, Allen Head, Low Profile (9-51)
NM — Jackscrew, Allen Head, Low Profile (100)
P — Jackpost Assembly (9-51)
S — Jackpost Assembly (100)
X — Lockscrew, Slotted Head
Y — Lockscrew, Allen Head
Z — Clip and Key (Clip Mount Only)

Layout

9, 15, 21, 25, 31, 37, 51, 100
See contact arrangement

Contact Type

P — Pin (Plug)
S — Socket (Receptacle)

Lead Length in Inches (Min.)

Insulation Color or Finish

1 — All white wire
2 — All yellow wire
3 — All gray wire
4 — Gold plated
5 — Tin dipped gold plated
6 — Bare (unfinished)
7 — Color coded per MIL-STD-681, System 1
8 — Special color code
9 — 10 Solid color repeating per MIL-DTL-83513

Wire Type

Per MIL-W-16878:
A — Type E, 7 strand
B — Type ET, 7 strand
C — Type E, 19 strand
D — Type ET, 19 strand
F — 7 strand per MIL-W-22759/11 (28 AWG only)
G — 19 strand per MIL-C-22759/11 ***(26 AWG only)***, 24 AWG
L — Copper, Solid ***(25 AWG only)***
Q — Stranded per MIL-W-22759/33 ***(26 AWG only)***

Wire Size

4 — 24 AWG ***5 — 25 AWG*** ***6 — 26 AWG*** 8 — 28 AWG 0 — 30 AWG

Plastic Shell

MCD R3 — B — 37 P 6 A 1 — 18.0

S — Solder pots 26 AWG max.

X — Special — Does not fit description below.

Connector Series

Insulator Type/Material

G2 — Clip Mount, polyester, natural
G3 — Screw Mount, polyester, natural, .093 Flg.
R2 — Clip Mount, Ryton
R3 — Screw Mount, Liquid Crystal Polymer or Polyphenylene Sulfide

Hardware (See Pages 5-79 and 5-80)

B — No Hardware
F — Float Bushing
KM — Jackscrew, Slotted Head, High Profile
LM — Jackscrew, Slotted Head, Low Profile
QM — Jackscrew, Allen Head, High Profile
RM — Jackscrew, Allen Head, Low Profile
P — Jackpost Assembly
X — Lockscrew, Slotted Head
Y — Lockscrew, Allen Head
Z — Clip and Key (Clip Mount Only)

Layout

9, 15, 21, 25, 31, 37, 51
See contact arrangement

Contact Type

P — Pin (Plug)
S — Socket (Receptacle)

Lead Length in Inches (Min.)

Insulation Color or Finish

1 — All white wire
2 — All yellow wire
3 — All gray wire
4 — Gold plated
5 — Tin dipped gold plated
6 — Bare (unfinished)
7 — Color coded per MIL-STD-681, System 1
8 — Special color code
9 — 10 Solid color repeating per MIL-DTL-83513

Wire Type

Per MIL-W-16878:
A — Type E, 7 strand
B — Type ET, 7 strand
C — Type E, 19 strand
D — Type ET, 19 strand
F — 7 strand per MIL-W-22759/11 (28 AWG only)
G — 19 strand per MIL-C-22759/11 ***(26 AWG only)***, 24 AWG
L — Copper, Solid ***(25 AWG only)***
Q — Stranded per MIL-W-22759/33 ***(26 AWG only)***

Wire Size

4 — 24 AWG ***5 — 25 AWG*** ***6 — 26 AWG*** 8 — 28 AWG 0 — 30 AWG

Note: Items in bold italic are qualified to MIL-DTL-83513.

Catalog 1308940
Revised 9-14

www.te.com

Dimensions are shown for reference purposes only. Specifications subject to change.

Dimensions are in millimeters unless otherwise specified.

USA: +1 800 522 6752
Asia Pacific: +86 0 400 820 6015
UK: +44 800 267 666

For additional support numbers please visit www.te.com

MICRODOT Contact Arrangements

Face View of Pin Insert (Socket Side is Mirror Image)

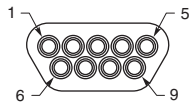

9 Contacts

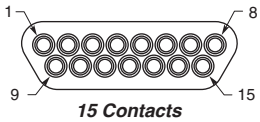

15 Contacts

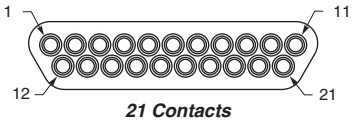

21 Contacts

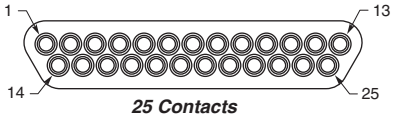

25 Contacts

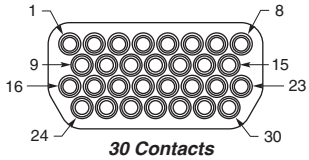

30 Contacts (MCDM Only)

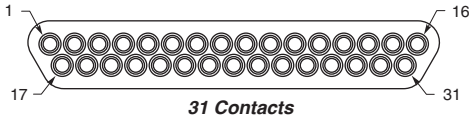

31 Contacts

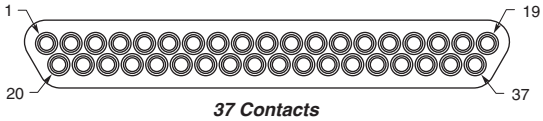

37 Contacts

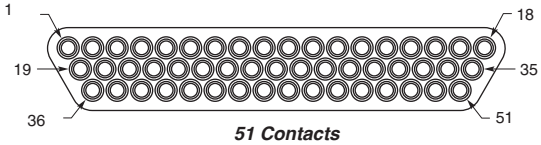

51 Contacts

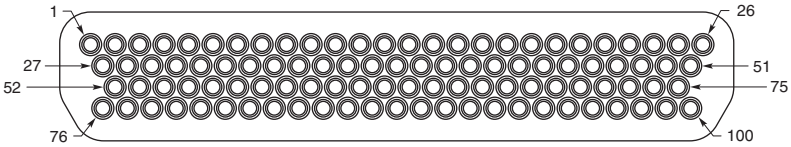

100 Contacts (MCK Only)

Note: MCK metal shells are not designed to intermate or interchange with MCD plastic shells. If metal/plastic intermating is desired, use MCDM Series Metal Shell on pages 5-72 and 5-73 with MCD Series Plastic Shell on page 5-58.

Catalog 1308940
Revised 9-14

www.te.com

Dimensions are shown for reference purposes only. Specifications subject to change.

Dimensions are in millimeters unless otherwise specified.

USA: +1 800 522 6752
Asia Pacific: +86 0 400 820 6015
UK: +44 800 267 666

For additional support numbers please visit www.te.com

MICRODOT MCK Series Metal Shell Connectors

Dimensions per MIL-DTL-83513

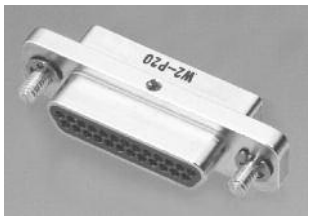

Plug
(Pin side)

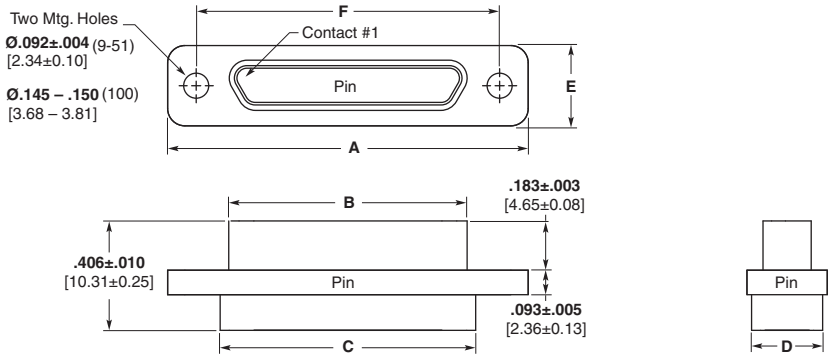

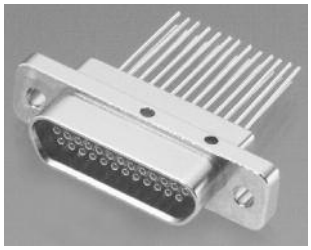

Receptacle
(Socket side)

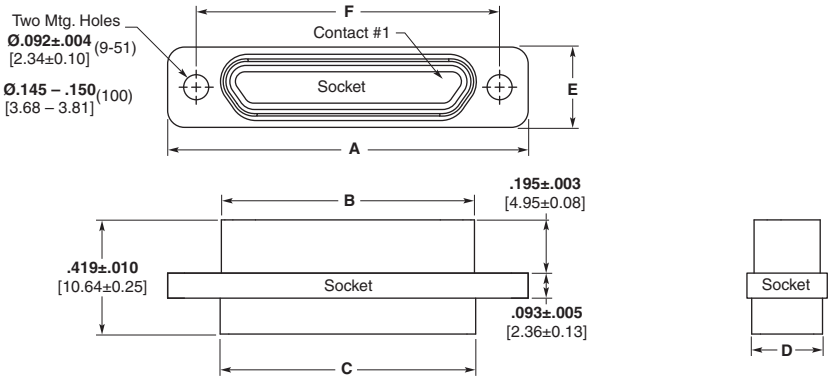

Part Number	A ± .010 [.254]	B Max.	C +.010 [.254] -.018 [.457]	D Max	E ±.010 [.254]	F ± 005 [.127]
MCK**- 9P***	**.775** 19.68	**.3338** 8.48	**.390** 9.91	**.270** 6.86	**.298** 7.57	**.565** 14.35
MCK**- 9S***	**.775** 19.68	**.4018** 10.21	**.390** 9.91	**.270** 6.86	**.298** 7.57	**.565** 14.35
MCK**- 15P***	**.925** 23.50	**.4838** 12.29	**.540** 13.72	**.270** 6.86	**.298** 7.57	**.715** 18.16
MCK**- 15S***	**.925** 23.50	**.5518** 14.02	**.540** 13.72	**.270** 6.86	**.298** 7.57	**.715** 18.16
MCK**- 21P***	**1.075** 27.30	**.6338** 16.10	**.690** 17.53	**.270** 6.86	**.298** 7.57	**.865** 21.97
MCK**- 21S***	**1.075** 27.30	**.7018** 18.05	**.690** 17.53	**.270** 6.86	**.298** 7.57	**.865** 21.97
MCK**- 25P***	**1.175** 29.84	**.7338** 18.64	**.790** 20.07	**.270** 6.86	**.298** 7.57	**.965** 24.51
MCK**- 25S***	**1.175** 29.84	**.8018** 20.37	**.790** 20.07	**.270** 6.86	**.298** 7.57	**.965** 24.51
MCK**- 31P***	**1.325** 33.66	**.8838** 22.45	**.940** 23.88	**.270** 6.86	**.298** 7.57	**1.115** 28.32
MCK**- 31S***	**1.325** 33.66	**.9518** 24.18	**.940** 23.88	**.270** 6.86	**.298** 7.57	**1.115** 28.32
MCK**- 37P***	**1.475** 37.46	**1.0338** 26.26	**1.090** 27.69	**.270** 6.86	**.298** 7.57	**1.265** 32.13
MCK**- 37S***	**1.475** 37.46	**1.1018** 27.99	**1.090** 27.69	**.270** 6.86	**.298** 7.57	**1.265** 32.13
MCK**- 51P***	**1.425** 36.20	**.9838** 24.99	**1.040** 26.42	**.310** 7.87	**.341** 8.66	**1.215** 30.86
MCK**- 51S***	**1.425** 36.20	**1.0518** 26.72	**1.040** 26.42	**.310** 7.87	**.341** 8.66	**1.215** 30.86
MCK**- 100P***	**2.160** 54.86	**1.3838** 35.15	**1.432** 36.37	**.360** 9.15	**.384** 9.75	**1.800** 45.71
MCK**- 100S***	**2.160** 54.86	**1.508** 38.30	**1.432** 36.37	**.360** 9.15	**.384** 9.75	**1.800** 45.71

P = Pin, S = Socket

Catalog 1308940
Revised 9-14

www.te.com

Dimensions are shown for reference purposes only. Specifications subject to change.

Dimensions are in millimeters unless otherwise specified.

USA: +1 800 522 6752
Asia Pacific: +86 0 400 820 6015
UK: +44 800 267 666

For additional support numbers please visit www.te.com

MICRODOT MCK Series Metal Shell Connectors Panel Mounting — Cutout Dimensions

Panel Mounting Dimensions — MCK

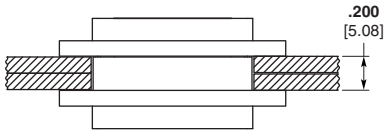

Plug and Receptacle Rear Mounted

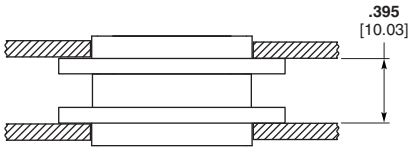

Plug and Receptacle Front Mounted

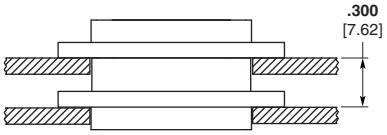

Plug Front Mounted Receptacle Rear Mounted

Panel Cutout Dimensions — MCK

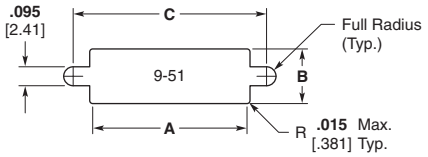

Figure 1
Front Mounting

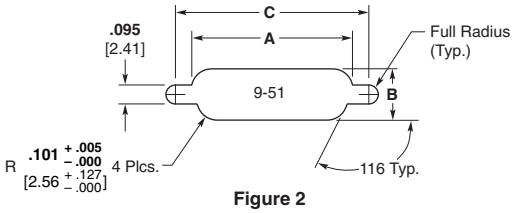

Figure 2
Rear Mounting

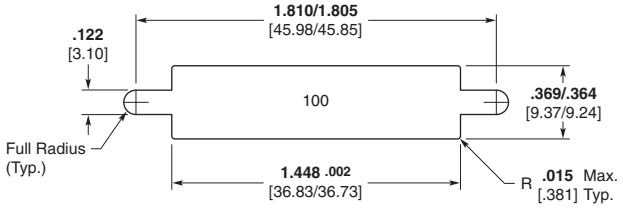

Front Mounting

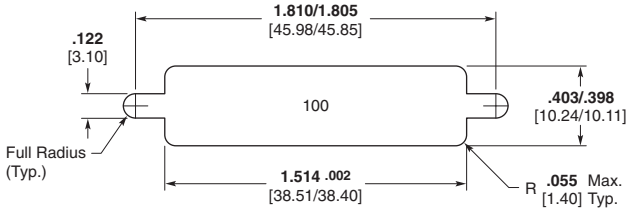

Rear Mounting

Number of Contacts	Fig.	A + .004 [.102] − .000 [.000]	B + .004 [.102] − .000 [.000]	C + .005 [.127] − .000 [.000]
9	1	**.404** 10.26	**.274** 6.96	**.570** 14.48
	2	**.406** 10.31	**.257** 6.53	**.570** 14.48
15	1	**.554** 14.07	**.274** 6.96	**.720** 18.29
	2	**.556** 14.12	**.257** 6.53	**.720** 18.29
21	1	**.704** 17.88	**.274** 6.96	**.870** 22.10
	2	**.706** 17.93	**.257** 6.53	**.870** 22.10
25	1	**.804** 20.42	**.274** 6.96	**.970** 24.64
	2	**.806** 20.47	**.257** 6.53	**.970** 24.64
31	1	**.954** 24.23	**.274** 6.96	**1.120** 28.45
	2	**.956** 24.28	**.257** 6.53	**1.120** 28.45
37	1	**1.104** 28.04	**.274** 6.96	**1.270** 32.26
	2	**1.106** 28.09	**.257** 6.53	**1.270** 32.26
51	1	**1.054** 26.77	**.314** 7.98	**1.220** 30.99
	2	**1.056** 26.82	**.300** 7.62	**1.220** 30.99

Catalog 1308940
Revised 9-14

www.te.com

Dimensions are shown for reference purposes only. Specifications subject to change.

Dimensions are in millimeters unless otherwise specified.

USA: +1 800 522 6752
Asia Pacific: +86 0 400 820 6015
UK: +44 800 267 666

For additional support numbers please visit www.te.com

MICRODOT MCD Series Plastic Shell Connectors

Screw Mount Dimensions Per MIL-DTL-83513

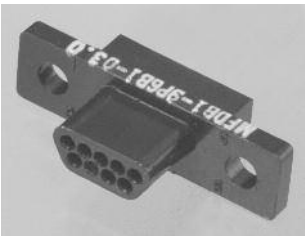

Plug (Pin side)

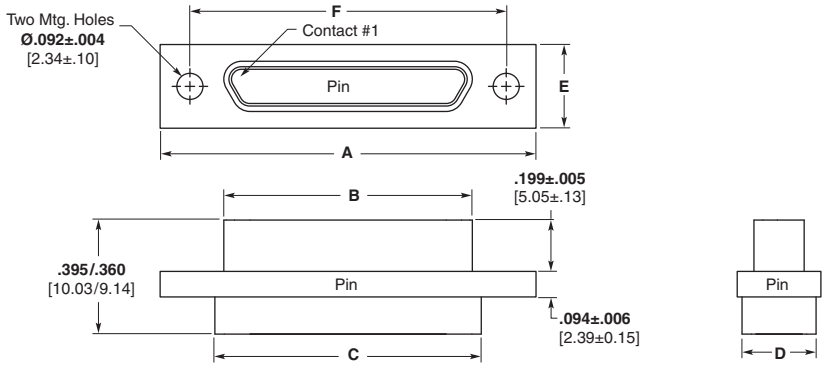

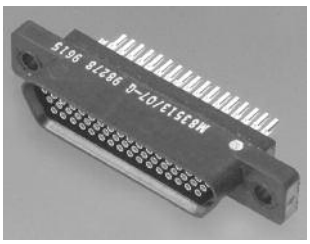

Receptacle (Socket side)

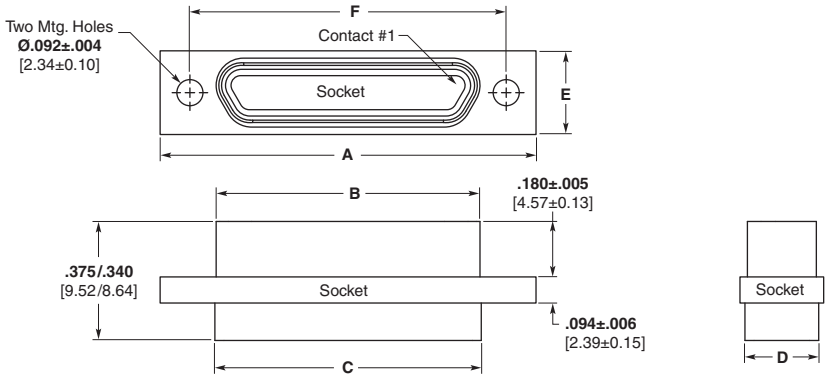

Liquid Crystal Polymer or Polyphenylene Sulfide — MCDR3* per MIL-DTL-83513

Note: MCD Plastic Screw Mount Series is intermateable with MCDM Metal Series Connectors (Pages 5-72 and 5-73).

Part Number	A ± .010 [.254]	B Max.	C +.010 [.254] -.018 [.457]	D Max	E ±.010 [.254]	F ± 005 [.127]	Avg. Weight lbs. ± 5% [grams]
MCD**- 9P***	**.778** 19.76	**.2918** 7.412	**.398** 10.11	**.173** 4.39	**.208** 5.28	**.565** 14.35	**.0017** 0.77
MCD**- 9S***	**.778** 19.76	**.3798** 9.647	**.398** 10.11	**.173** 4.39	**.208** 5.28	**.565** 14.35	**.0016** 0.72
MCD**- 15P***	**.928** 23.57	**.4418** 11.222	**.548** 13.92	**.173** 4.39	**.208** 5.28	**.715** 18.16	**.0024** 1.08
MCD**- 15S***	**.928** 23.57	**.5298** 13.457	**.548** 13.92	**.173** 4.39	**.208** 5.28	**.715** 18.16	**.0023** 1.04
MCD**- 21P***	**1.078** 27.38	**.5918** 15.032	**.698** 17.73	**.173** 4.39	**.208** 5.28	**.865** 21.97	**.0035** 1.59
MCD**- 21S***	**1.078** 27.38	**.6798** 17.267	**.698** 17.73	**.173** 4.39	**.208** 5.28	**.865** 21.97	**.0034** 1.54
MCD**- 25P***	**1.178** 29.92	**.6918** 17.572	**.798** 20.27	**.173** 4.39	**.208** 5.28	**.965** 24.51	**.0042** 1.90
MCD**- 25S***	**1.178** 29.92	**.7798** 19.807	**.798** 20.27	**.173** 4.39	**.208** 5.28	**.965** 24.51	**.0037** 1.67
MCD**- 31P***	**1.328** 33.73	**.8418** 21.382	**.948** 24.08	**.173** 4.39	**.208** 5.28	**1.115** 28.32	**.0053** 2.40
MCD**- 31S***	**1.328** 33.73	**.9298** 23.617	**.948** 24.08	**.173** 4.39	**.208** 5.28	**1.115** 28.32	**.0048** 2.17
MCD**- 37P***	**1.478** 37.54	**.9918** 25.192	**1.098** 27.89	**.173** 4.39	**.208** 5.28	**1.265** 32.13	**.0057** 2.58
MCD**- 37S***	**1.478** 37.54	**1.0798** 27.427	**1.098** 27.89	**.173** 4.39	**.208** 5.28	**1.265** 32.13	**.0051** 2.31
MCD**- 51P***	**1.428** 36.27	**.9418** 23.922	**1.048** 26.62	**.220** 5.59	**.250** 6.35	**1.215** 30.86	**.0072** 3.26
MCD**- 51S***	**1.428** 36.27	**1.0298** 26.157	**1.048** 26.62	**.220** 5.59	**.250** 6.35	**1.215** 30.86	**.0063** 2.85

P = Pin, S = Socket
Note: Weight given is with .500 [12.7] uninsulated, solid, 24 AWG gold plated copper pigtails.
*See "How to Specify" for description, on page 5-54.

Dimensions are shown for reference purposes only. Specifications subject to change.

Dimensions are in millimeters unless otherwise specified.

USA: +1 800 522 6752
Asia Pacific: +86 0 400 820 6015
UK: +44 800 267 666

For additional support numbers please visit www.te.com

MICRODOT MCD Series Plastic Shell Connectors (Continued)

Clip Mount — MCD

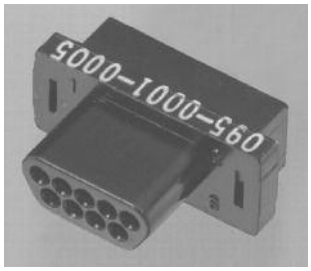

Plug
(Pin side)

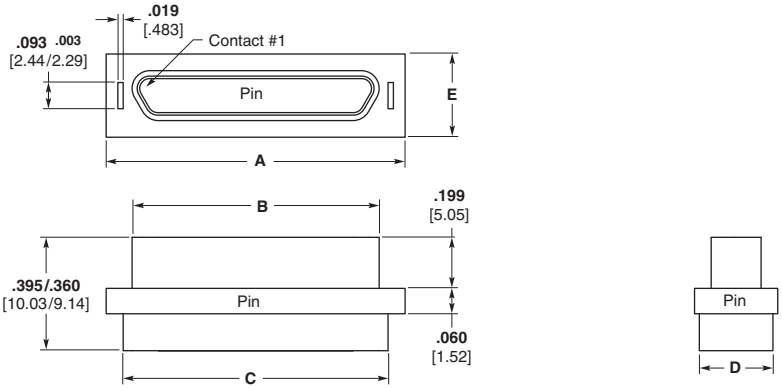

Receptacle
(Socket side)

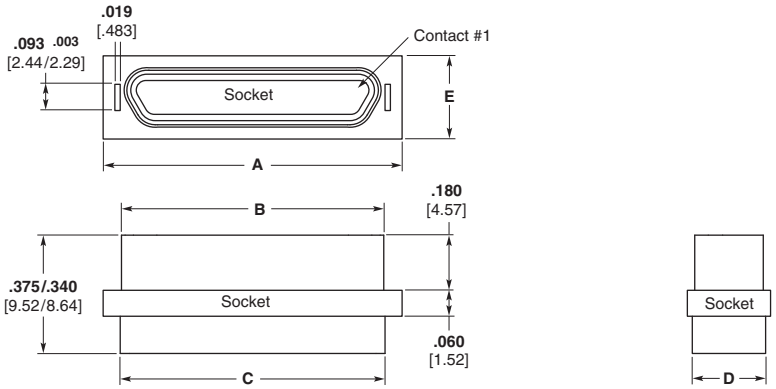

Note: Clip Mount not covered by current issue of MIL-DTL-83513.

Part Number	A ±.005 [.127]	B Max.	C ±.010 [.254]	D ±.010 [.254]	E ±.005 [.127]	Avg. Weight lbs. ± 5% [grams]
MCD**- 9P***	**.506** 12.85	**.2918** 74.12	**.398** 10.11	**.165** 4.19	**.208** 5.28	**.0017** 0.77
MCD**- 9S***	**.506** 12.85	**.3798** 96.47	**.398** 10.11	**.165** 4.19	**.208** 5.28	**.0016** 0.72
MCD**- 15P***	**.656** 16.66	**.4418** 112.22	**.548** 13.92	**.165** 4.19	**.208** 5.28	**.0024** 1.08
MCD**- 15S***	**.656** 16.66	**.5298** 134.57	**.548** 13.92	**.165** 4.19	**.208** 5.28	**.0023** 1.04
MCD**- 21P***	**.806** 20.47	**.5918** 150.32	**.698** 17.73	**.165** 4.19	**.208** 5.28	**.0035** 1.59
MCD**- 21S***	**.806** 20.47	**.6798** 172.67	**.698** 17.73	**.165** 4.19	**.208** 5.28	**.0034** 1.54
MCD**- 25P***	**.906** 23.01	**.6918** 175.72	**.798** 20.27	**.165** 4.19	**.208** 5.28	**.0042** 1.90
MCD**- 25S***	**.906** 23.01	**.7798** 198.07	**.798** 20.27	**.165** 4.19	**.208** 5.28	**.0037** 1.67
MCD**- 31P***	**1.056** 26.82	**.8418** 213.82	**.948** 24.08	**.165** 4.19	**.208** 5.28	**.0053** 2.40
MCD**- 31S***	**1.056** 26.82	**.9298** 236.17	**.948** 24.08	**.165** 4.19	**.208** 5.28	**.0048** 2.17
MCD**- 37P***	**1.206** 30.63	**.9918** 251.92	**1.098** 27.89	**.165** 4.19	**.208** 5.28	**.0057** 2.58
MCD**- 37S***	**1.206** 30.63	**1.0798** 274.27	**1.098** 27.89	**.165** 4.19	**.208** 5.28	**.0051** 2.31
MCD**- 51P***	**1.156** 29.36	**.9418** 239.22	**1.048** 26.62	**.208** 5.28	**.250** 6.35	**.0072** 3.26
MCD**- 51S***	**1.156** 29.36	**1.0298** 261.57	**1.048** 26.62	**.208** 5.28	**.250** 6.35	**.0063** 2.85

P = Pin, S = Socket
Note: Weight given is with .500 [12.7] uninsulated, solid, 24 AWG gold plated copper pigtails.
*See "How to Specify" for description, on page 5-54.

Dimensions are shown for reference purposes only. Specifications subject to change.

Dimensions are in millimeters unless otherwise specified.

USA: +1 800 522 6752
Asia Pacific: +86 0 400 820 6015
UK: +44 800 267 666

For additional support numbers please visit www.te.com

MICRODOT MCD Series Plastic Shell Connectors Panel Mounting — Cutout Dimensions

Panel Mounting Dimensions — MCD

Clip Mount

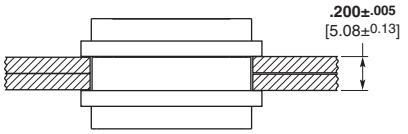

Plug and Receptacle
Rear Mounted

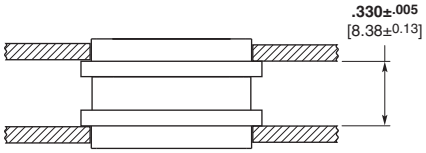

Plug and Receptacle
Front Mounted

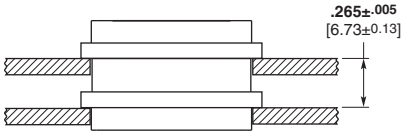

Plug Front Mounted
Receptacle Rear Mounted

Screw Mount

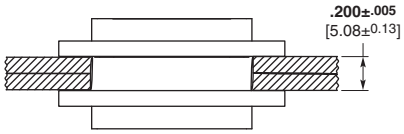

Plug and Receptacle
Rear Mounted

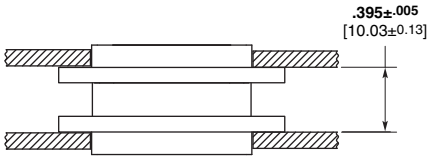

Plug and Receptacle
Front Mounted

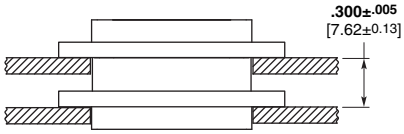

Plug Front Mounted
Receptacle Rear Mounted

Panel Cutout Dimensions — MCD

Clip Mounting

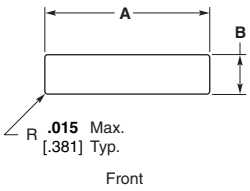

Figure 1

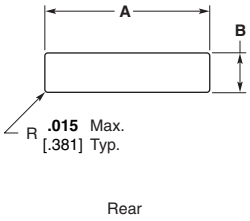

Figure 3

Screw Mounting

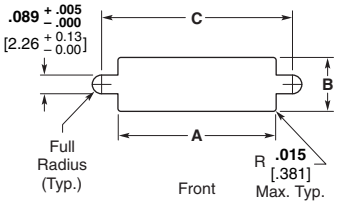

Figure 2

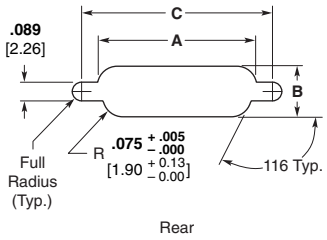

Figure 4

Notes: Front mounting preferred.

Number of Contacts	Fig.	A + .004 [.102] − .000 [.000]	B + .004 [.102] − .000 [.000]	C + .005 [.127] − .000 [.000]
9	1	**.438** [11.13]	**.177** [4.50]	—
	2	**.412** [10.46]	**.177** [4.50]	**.570** [14.48]
	3	**.438** [11.13]	**.222** [5.64]	—
	4	**.384** [9.75]	**.222** [5.64]	**.570** [14.48]
15	1	**.588** [14.93]	**.177** [4.50]	—
	2	**.562** [14.27]	**.177** [4.50]	**.720** [18.29]
	3	**.588** [14.93]	**.222** [5.64]	—
	4	**.534** [13.56]	**.222** [5.64]	**.720** [18.29]
21	1	**.738** [18.75]	**.177** [4.50]	—
	2	**.712** [18.08]	**.177** [4.50]	**.870** [22.10]
	3	**.738** [18.75]	**.222** [5.64]	—
	4	**.684** [17.37]	**.222** [5.64]	**.870** [22.10]
25	1	**.838** [21.29]	**.177** [4.50]	—
	2	**.812** [20.62]	**.177** [4.50]	**.970** [24.64]
	3	**.838** [21.29]	**.222** [5.64]	—
	4	**.784** [19.91]	**.222** [5.64]	**.970** [24.64]
31	1	**.988** [25.10]	**.177** [4.50]	—
	2	**.962** [24.43]	**.177** [4.50]	**1.120** [28.45]
	3	**.988** [25.10]	**.222** [5.64]	—
	4	**.934** [23.72]	**.222** [5.64]	**1.120** [28.45]
37	1	**1.138** [28.91]	**.177** [4.50]	—
	2	**1.112** [28.24]	**.177** [4.50]	**1.270** [32.26]
	3	**1.138** [28.91]	**.222** [5.64]	—
	4	**1.084** [27.53]	**.222** [5.64]	**1.270** [32.26]
51	1	**1.088** [27.64]	**.224** [5.69]	—
	2	**1.062** [26.97]	**.224** [5.69]	**1.220** [30.99]
	3	**1.088** [27.64]	**.264** [6.71]	—
	4	**1.034** [26.26]	**.264** [6.71]	**1.220** [30.99]

Catalog 1308940
Revised 9-14

www.te.com

Dimensions are shown for reference purposes only. Specifications subject to change.

Dimensions are in millimeters unless otherwise specified.

USA: +1 800 522 6752
Asia Pacific: +86 0 400 820 6015
UK: +44 800 267 666

For additional support numbers please visit www.te.com

MICRODOT Mounting and Coupling Hardware

For Screw Mount MCK, MCKS, MCD and MCDM

9-51 Contacts Slot Head

(KM)

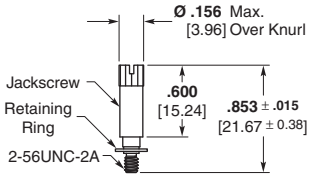

Part Number 5-1532137-8
Jackscrew Assembly
High Profile
M83513/5-06
(KM) S96-0002-0084

(LM)

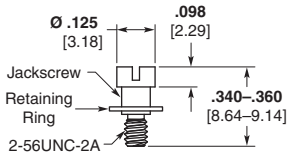

Part Number 5-1532137-7
Jackscrew Assembly
Low Profile
M83513/5-05
(LM) S96-0002-0085

(P)

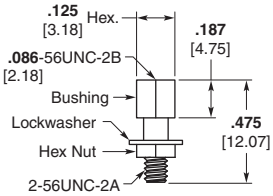

Part Number 5-1532137-9
Jackpost Assembly
(P) S96-0002-0009
M83513/5-07

P mates with KM, LM, QM and RM Jackscrew Assemblies.

9-51 Contacts 1/16" Allen Head

(QM)

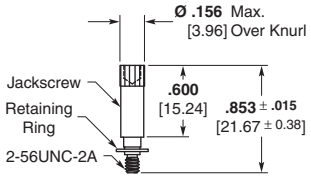

Part Number 5-1532137-6
Jackscrew Assembly
High Profile
M83513/5-03
(QM) S96-0002-0086

(RM)

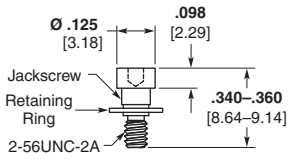

Part Number 5-1532137-5
Jackscrew Assembly
Low Profile
M83513/5-02
(RM) S96-0002-0087

Notes:
1. Jackpost Assemblies will accommodate .094 [2.39] max. thickness panel.
2. Letter(s) in parentheses is to assist in ordering hardware with the connector (See "How To Specify" page 5-54).
3. **Items in bold italic are qualified to MIL-DTL-83513.**
4. Mounting torque values and mating torque values are per MIL-DTL-83513/5.

100 Contacts Slot Head

(HM)

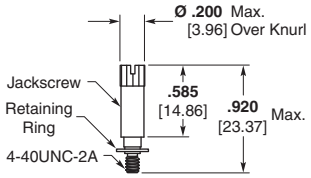

Part Number 6-1532137-3
Jackscrew Assembly
High Profile
M83513/5-16
(HM) S96-0002-0088

(JM)

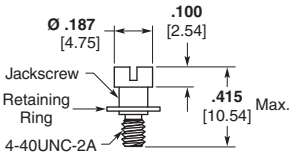

Part Number 6-1532137-2
Jackscrew Assembly
Low Profile
M83513/5-15
(JM) S96-0002-0089

100 Contacts 1/16" Allen Head

(TM)

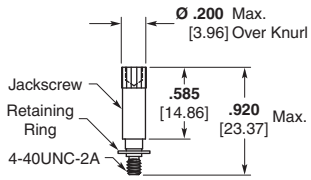

Part Number 6-1532137-1
Jackscrew Assembly
High Profile
M83513/5-13
(TM) S96-0002-0090

(NM)

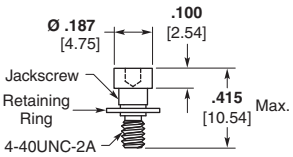

Part Number 6-1532137-0
Jackscrew Assembly
Low Profile
M83513/5-12
(NM) S96-0002-0091

(S)

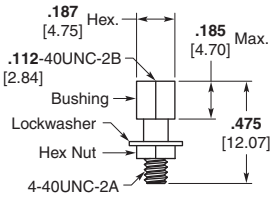

Part Number 6-1532137-4
Jackpost Assembly
(S) S96-0002-0060
M83513/5-17

S mates with HM, JM, TM and NM Jackscrew Assemblies.

Dimensions are shown for reference purposes only. Specifications subject to change.

Dimensions are in millimeters unless otherwise specified.

USA: +1 800 522 6752
Asia Pacific: +86 0 400 820 6015
UK: +44 800 267 666

For additional support numbers please visit www.te.com

MICRODOT Mounting and Coupling Hardware (Continued)

For Screw Mount MCK, MCD and MCDM (Continued)

Slot Head

(X)

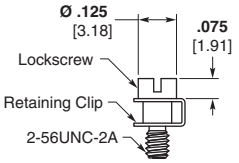

Part Number 4-1532137-3
Lockscrew Assembly
096-0002-0008

1/16" Allen Head

(Y)

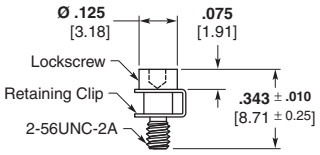

Part Number 1495164-1
Lockscrew Assembly
096-0002-0013

For Clip Mount — MCD

(Z)

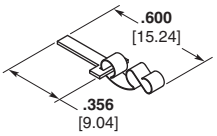

Part Number 1466018-1
Mounting Key and Clip
P/N 096-0001-0000
(2 Required)

For Float Mount — MCK, MCD and MCDM

(F)

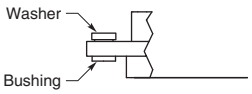

Float Mount Bushing
(Factory Installed)

Notes:
1. Jackpost Assemblies will accommodate .094 [2.39] max. thickness panel.
2. Letter(s) in parentheses is to assist in ordering hardware with the connector (See “How To Specify” page 5-54).
3. Hardware ordered separately should be ordered in pairs; i.e. 2 pcs. P/N 096-0002-0013 per connector half.

MICRODOT MCK Transition Blocks

RT1 — Right-Angle Termination Configuration

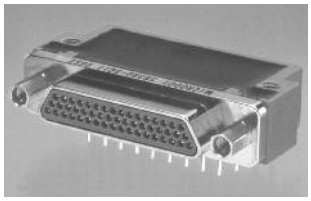

MIL-DTL-83513/10 through /15 configurations. 90° — Narrow Profile termination configurations.

See pages 5-78 to 5-82 for M83513 cross references.

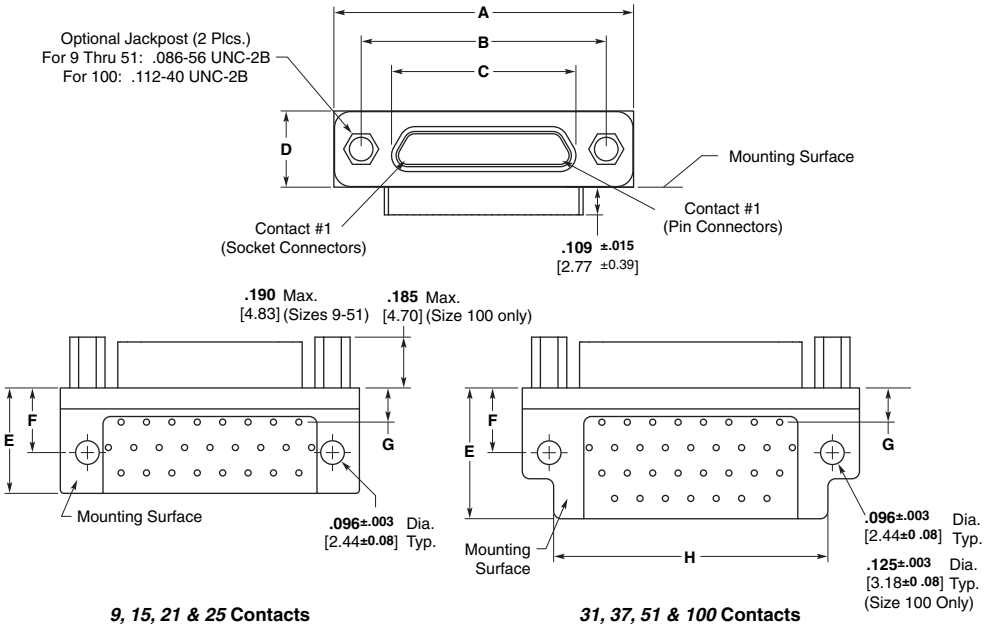

***9, 15, 21 & 25* Contacts** ***31, 37, 51 & 100* Contacts**

How To Specify

MCK — N1 — P — 37 P RT1

Right Angle Termination (Solder Dipped)
RT1 — w/ .109 Leads
RT1A — w/ .140 Leads
RT1B — w/ .172 Leads

Contact Type
S = STD Socket
P = STD Pin

Layout
9, 15, 21, 25, 31, 37, 51 and 100

Hardware
P = Jackpost (9-51)
B = No Hardware
S = Jackpost (100)

Shell Finish
C2 = Cadmium, Yellow Chromate
N1 = Nickel, Electroless

Connector Series
(See page 87)

Notes:
1. For terminal identification see page 5-65.
2. Grid pattern for all configurations is .100 x .100 [2.54 x 2.54].
3. Lead lengths shown are for RT1.
4. **Items in bold italic are qualified to MIL-DTL-83513.**

Catalog 1308940
Revised 9-14
www.te.com

Dimensions are shown for reference purposes only. Specifications subject to change.

Dimensions are in millimeters unless otherwise specified.

USA: +1 800 522 6752
Asia Pacific: +86 0 400 820 6015
UK: +44 800 267 666

For additional support numbers please visit www.te.com

MICRODOT MCK Transition Blocks (Continued)

RT1 — Right-Angle Termination Configuration
(Continued)

Part Number	A Max.	B ± 005 [.127]	C Max.	D Max.	E Max.	F +.010 [.254]	G +.010 [.254]	H Max.
MCK-**- *- 9PRT1	**.787** 19.99	**.565** 14.35	**.3338** 8.48	**.308** 7.83	**.425** 10.80	**.250** 6.35	**.230** 5.84	—
MCK-**- *- 9SRT1	**.787** 19.99	**.565** 14.35	**.4018** 10.21	**.308** 7.83	**.425** 10.80	**.250** 6.35	**.230** 5.84	—
MCK-**- *- 15PRT1	**.937** 23.80	**.715** 18.16	**.4838** 12.29	**.308** 7.83	**.425** 10.80	**.250** 6.35	**.130** 3.30	—
MCK-**- *- 15SRT1	**.937** 23.80	**.715** 18.16	**.5518** 14.02	**.308** 7.83	**.425** 10.80	**.250** 6.35	**.130** 3.30	—
MCK-**- *- 21PRT1	**1.087** 27.61	**.865** 21.97	**.6338** 16.10	**.308** 7.83	**.425** 10.80	**.250** 6.35	**.130** 3.30	—
MCK-**- *- 21SRT1	**1.087** 27.61	**.865** 21.97	**.7018** 17.83	**.308** 7.83	**.425** 10.80	**.250** 6.35	**.130** 3.30	—
MCK-**- *- 25PRT1	**1.187** 30.15	**.965** 24.51	**.7338** 18.64	**.308** 7.83	**.425** 10.80	**.250** 6.35	**.130** 3.30	—
MCK-**- *- 25SRT1	**1.187** 30.15	**.965** 24.51	**.8018** 20.37	**.308** 7.83	**.425** 10.80	**.250** 6.35	**.130** 3.30	—
MCK-**- *- 31PRT1	**1.337** 33.96	**1.115** 28.32	**.8838** 22.45	**.308** 7.83	**.525** 13.34	**.250** 6.35	**.130** 3.30	**1.090** 27.69
MCK-**- *- 31SRT1	**1.337** 33.96	**1.115** 28.32	**.9518** 24.18	**.308** 7.83	**.525** 13.34	**.250** 6.35	**.130** 3.30	**1.090** 27.69
MCK-**- *- 37PRT1	**1.487** 37.77	**1.265** 32.13	**1.0338** 26.26	**.308** 7.83	**.525** 13.34	**.250** 6.35	**.130** 3.30	**1.190** 30.23
MCK-**- *- 37SRT1	**1.487** 37.77	**1.265** 32.13	**1.1018** 27.99	**.308** 7.83	**.525** 13.34	**.250** 6.35	**.130** 3.30	**1.190** 30.23
MCK-**- *- 51PRT1	**1.435** 36.45	**1.215** 30.86	**.9838** 24.99	**.351** 8.92	**.660** 16.76	**.300** 7.62	**.150** 3.81	**1.230** 31.24
MCK-**- *- 51SRT1	**1.435** 36.45	**1.215** 30.86	**1.0518** 26.72	**.351** 8.92	**.660** 16.76	**.300** 7.62	**.150** 3.81	**1.230** 31.24
MCK-**- *- 100PRT1	**2.175** 55.25	**1.800** 45.72	**1.3838** 35.15	**.394** 10.01	**1.010** 25.65	**.400** 10.16	**.200** 5.08	**1.825** 46.36
MCK-**- *- 100SRT1	**2.175** 55.25	**1.800** 45.72	**1.508** 38.30	**.394** 10.01	**1.010** 25.65	**.400** 10.16	**.200** 5.08	**1.825** 46.36

P = Pin, S = Socket

Note: Items in bold italic are qualified to MIL-DTL-83513.

Catalog 1308940
Revised 9-14

www.te.com

Dimensions are shown for reference purposes only. Specifications subject to change.

Dimensions are in millimeters unless otherwise specified.

USA: +1 800 522 6752
Asia Pacific: +86 0 400 820 6015
UK: +44 800 267 666

For additional support numbers please visit www.te.com

MICRODOT MCK Transition Blocks (Continued)

RT1 — Right-Angle Termination Configuration

(Continued)

View is of termination side of plug connector. For receptacle, use mirror image. (Except 100 contacts)

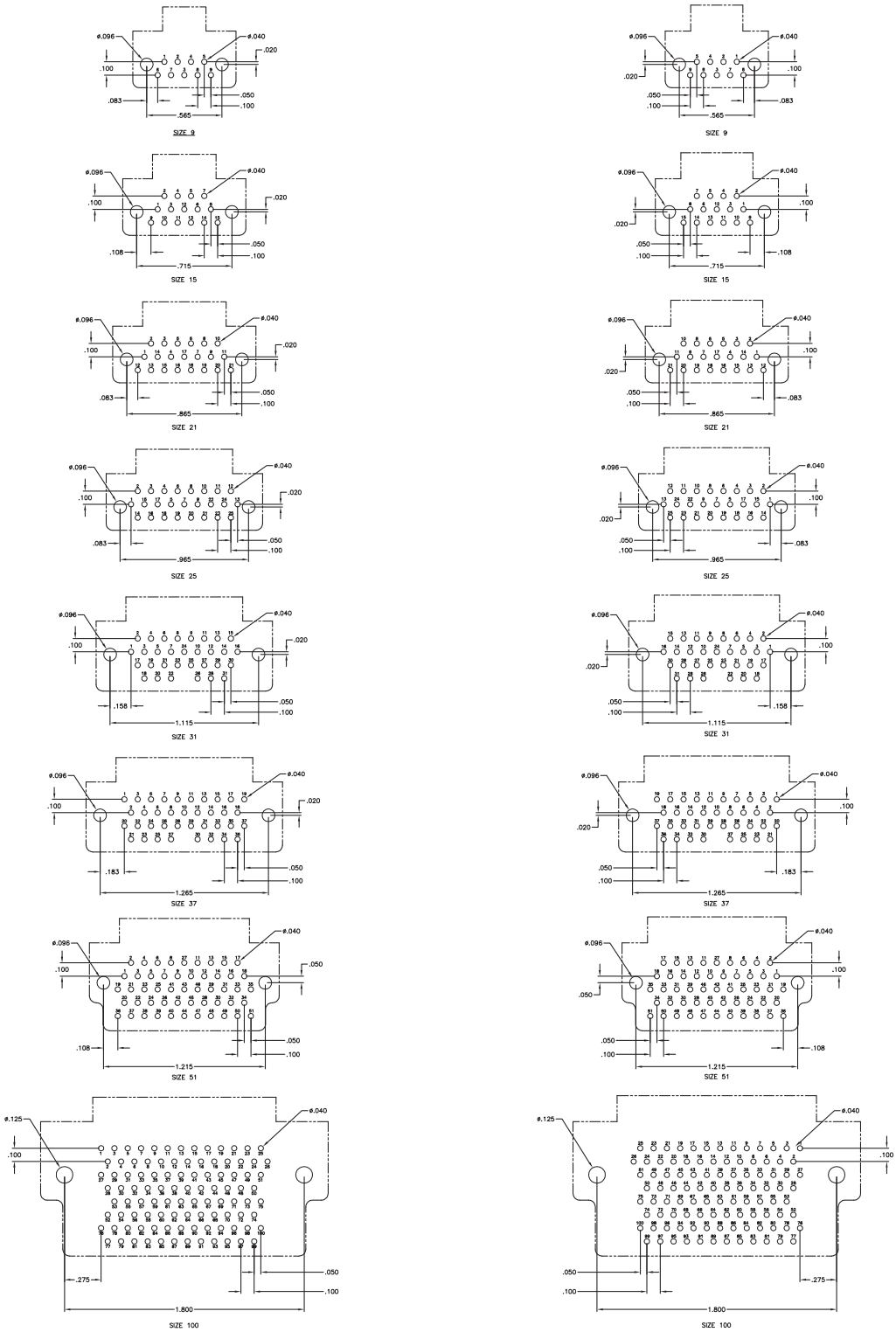

Dimensions are shown for reference purposes only. Specifications subject to change.

Dimensions are in millimeters unless otherwise specified.

USA: +1 800 522 6752
Asia Pacific: +86 0 400 820 6015
UK: +44 800 267 666

For additional support numbers please visit www.te.com

MICRODOT MCK Transition Blocks (Continued)

ST1 — Straight Termination Configuration

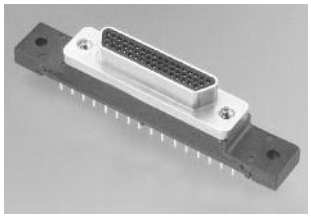

MIL-DTL-83513/22 through /27 configurations. 180° — Narrow Profile termination configurations.

See pages 5-78 to 5-82 for M83513 cross references.

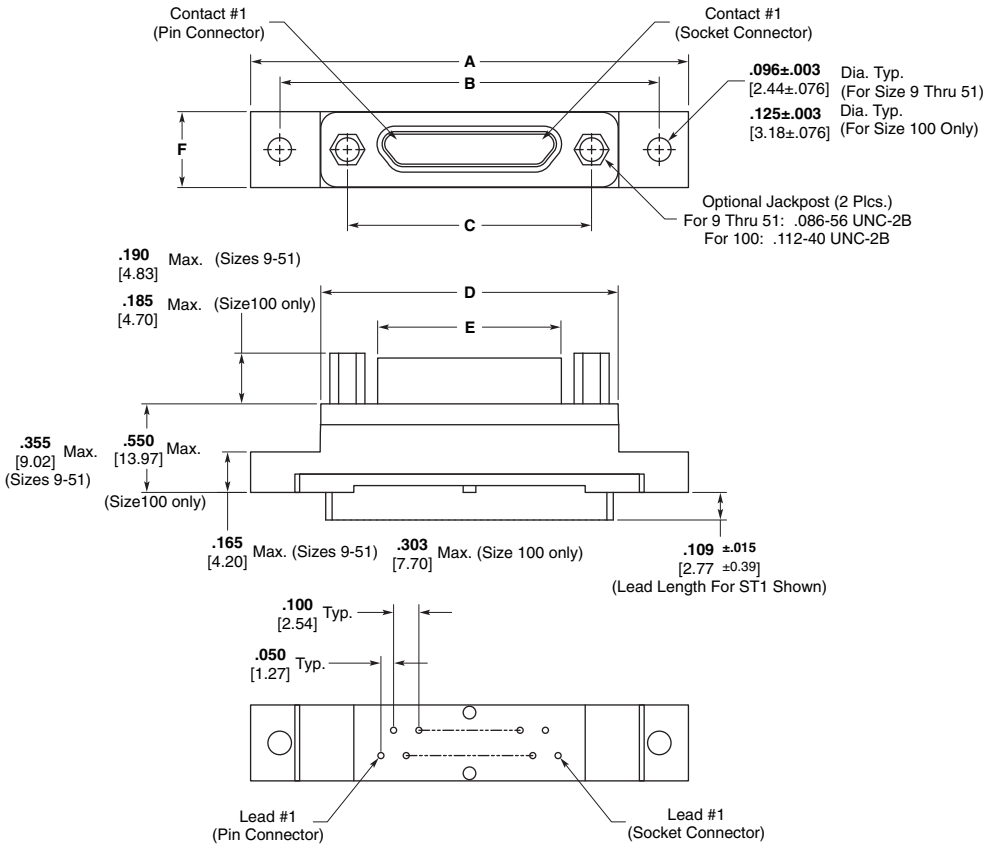

How To Specify

MCK — N1 — P — 37 P ST1

Straight Termination (Solder Dipped)
- ***ST1 — w/ .109 Leads***
- ***ST1A — w/ .140 Leads***
- ***ST1B — w/ .172 Leads***

Contact Type
- ***S = STD Socket***
- ***P = STD Pin***

Layout
- ***9, 15, 21, 25, 31, 37, 51 and 100***

Hardware
- ***P = Jackpost (9-51)***
- ***B = No Hardware***
- ***S = Jackpost (100)***

Shell Finish
- ***C2 = Cadmium, Yellow Chromate***
- ***N1 = Nickel, Electroless***

Connector Series
(See page 87)

Notes:
1. For terminal identification see page 5-81.
2. Grid pattern for all configurations is .100 x .100 [2.54 x 2.54].
3. Lead lengths shown are for ST1.
4. **Items in bold italic are qualified to MIL-DTL-83513.**

Catalog 1308940
Revised 9-14

www.te.com

Dimensions are shown for reference purposes only. Specifications subject to change.

Dimensions are in millimeters unless otherwise specified.

USA: +1 800 522 6752
Asia Pacific: +86 0 400 820 6015
UK: +44 800 267 666

For additional support numbers please visit www.te.com

MICRODOT MCK Transition Blocks (Continued)

ST1 — Straight Termination Configuration (Continued)

Part Number	A Max.	B ± .007 [.178]	C ± .005 [.127]	D Max.	E Max.	F Max.
MCK-**- *- 9PST1	**1.390** 35.31	**1.150** 29.21	**.565** 14.35	**.885** 22.48	**.3338** 8.48	**.308** 7.83
MCK-**- *- 9SST1	**1.390** 35.31	**1.150** 29.21	**.565** 14.35	**.885** 22.48	**.4018** 10.21	**.308** 7.83
MCK-**- *- 15PST1	**1.390** 35.31	**1.150** 29.21	**.715** 18.16	**.945** 24.00	**.4838** 12.29	**.308** 7.83
MCK-**- *- 15SST1	**1.390** 35.31	**1.150** 29.21	**.715** 18.16	**.945** 24.00	**.5518** 14.02	**.308** 7.83
MCK-**- *- 21PST1	**1.690** 42.93	**1.450** 36.83	**.865** 21.97	**1.185** 30.10	**.6338** 16.10	**.308** 7.83
MCK-**- *- 21SST1	**1.690** 42.93	**1.450** 36.83	**.865** 21.97	**1.185** 30.10	**.7018** 17.83	**.308** 7.83
MCK-**- *- 25PST1	**1.740** 44.20	**1.500** 38.10	**.965** 24.51	**1.275** 32.39	**.7338** 18.64	**.308** 7.83
MCK-**- *- 25SST1	**1.740** 44.20	**1.500** 38.10	**.965** 24.51	**1.275** 32.39	**.8018** 20.37	**.308** 7.83
MCK-**- *- 31PST1	**2.040** 51.82	**1.800** 45.72	**1.115** 28.32	**1.575** 40.01	**.8838** 22.45	**.308** 7.83
MCK-**- *- 31SST1	**2.040** 51.82	**1.800** 45.72	**1.115** 28.32	**1.575** 40.01	**.9518** 24.18	**.308** 7.83
MCK-**- *- 37PST1	**2.340** 59.44	**2.100** 53.34	**1.265** 32.13	**1.875** 47.63	**1.0338** 26.26	**.308** 7.83
MCK-**- *- 37SST1	**2.340** 59.44	**2.100** 53.34	**1.265** 32.13	**1.875** 47.63	**1.1018** 27.99	**.308** 7.83
MCK-**- *- 51PST1	**2.270** 57.66	**2.000** 50.80	**1.215** 30.86	**1.775** 45.09	**.9838** 24.99	**.351** 8.92
MCK-**- *- 51SST1	**2.280** 57.91	**2.000** 50.80	**1.215** 30.86	**1.775** 45.09	**1.0518** 26.72	**.351** 8.92
MCK-**- *- 100PST1	**3.250** 82.55	**2.800** 71.12	**1.800** 45.72	**2.585** 65.66	**1.3838** 35.15	**.460** 11.68
MCK-**- *- 100SST1	**3.250** 82.55	**2.800** 71.12	**1.800** 45.72	**2.585** 65.66	**1.508** 38.30	**.460** 11.68

P = Pin, S = Socket

Note: Items in bold italic are qualified to MIL-DTL-83513.

Dimensions are shown for reference purposes only. Specifications subject to change.

Dimensions are in millimeters unless otherwise specified.

USA: +1 800 522 6752
Asia Pacific: +86 0 400 820 6015
UK: +44 800 267 666

For additional support numbers please visit www.te.com

MICRODOT MCK Transition Blocks (Continued)

ST1 — Straight Termination Configuration (Continued)

View is of termination side of plug connector. For receptacle, use mirror image.

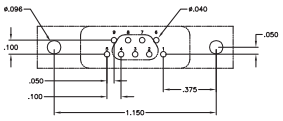

SIZE 9

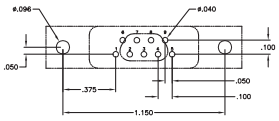

SIZE 9

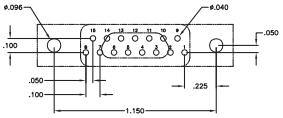

SIZE 15

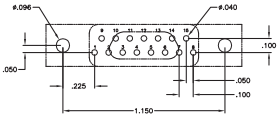

SIZE 15

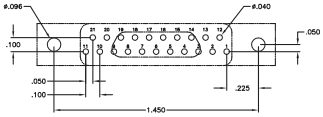

SIZE 21

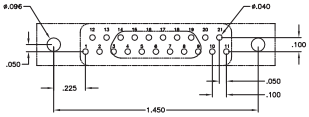

SIZE 21

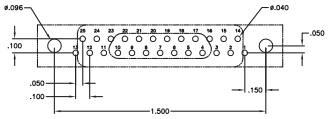

SIZE 25

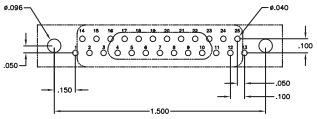

SIZE 25

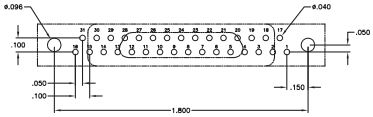

SIZE 31

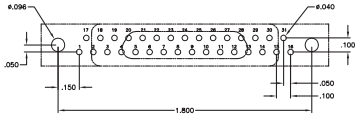

SIZE 31

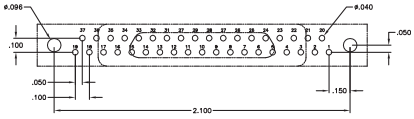

SIZE 37

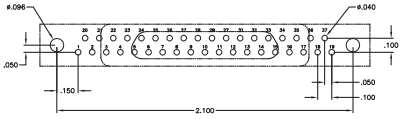

SIZE 37

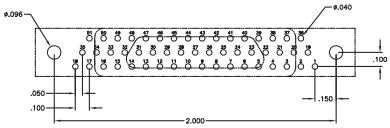

SIZE 51

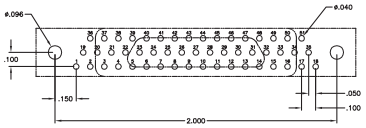

SIZE 51

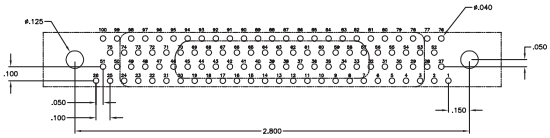

SIZE 100

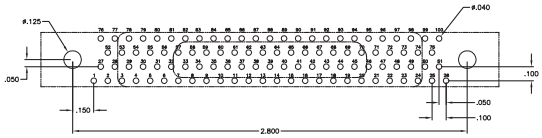

SIZE 100

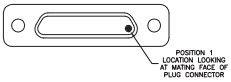

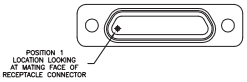

MICRODOT MCK ST2 Series Straight Mount PCB Connectors

MCK with Cactus Bend Termination

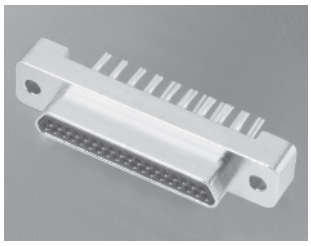

- Meets MIL-DTL-83513 Performance requirements
- Single metal shell with no Transition Block
- Low profile and light weight
- .100 [2.54] x .075 [1.91] grid pattern
- Design allows lower cost construction

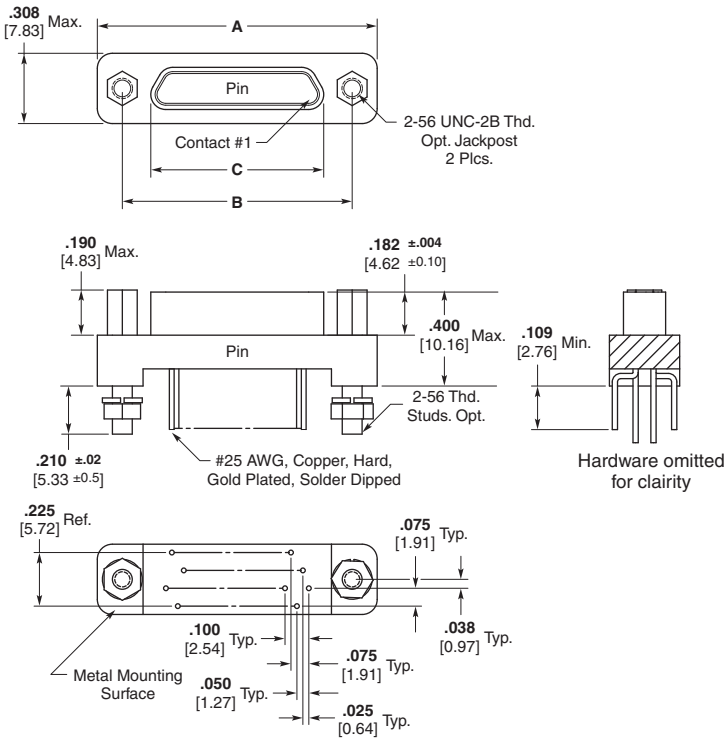

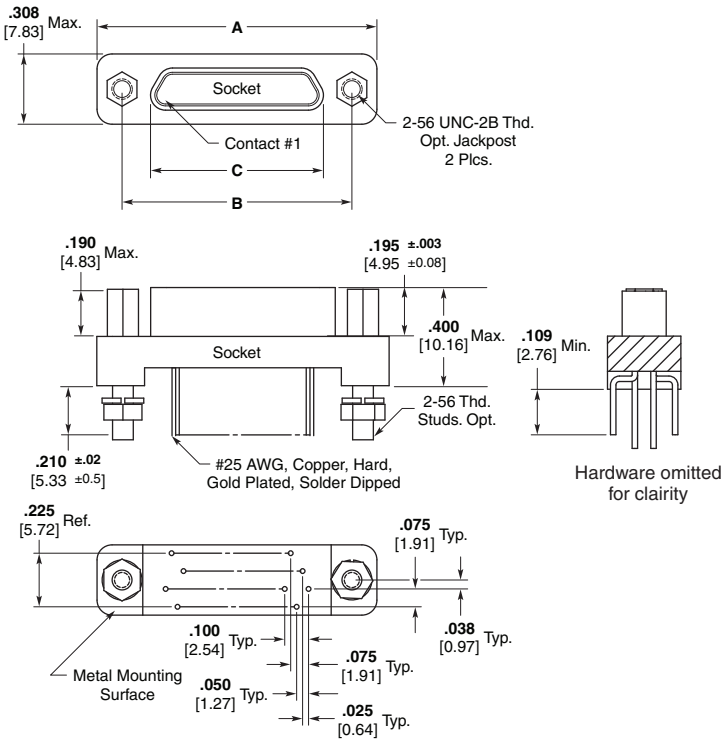

Catalog 1308940
Revised 9-14

www.te.com

Dimensions are shown for reference purposes only. Specifications subject to change.

Dimensions are in millimeters unless otherwise specified.

USA: +1 800 522 6752
Asia Pacific: +86 0 400 820 6015
UK: +44 800 267 666

For additional support numbers please visit www.te.com

MICRODOT MCK ST2 Series Straight Mount PCB Connectors (Continued)

Part Number	A Max.	B ± .005	C Max.
MCK-**-*- 9 PST2	**.785** 19.94	**.565** 14.35	**.333** 8.46
MCK-**-*- 9 SST2	**.785** 19.94	**.565** 14.35	**.402** 10.21
MCK-**-*- 15 PST2	**.935** 23.75	**.715** 18.16	**.483** 12.27
MCK-**-*- 15 SST2	**.935** 23.75	**.715** 18.16	**.552** 14.02
MCK-**-*- 21 PST2	**1.085** 27.56	**.865** 21.97	**.633** 16.08
MCK-**-*- 21 SST2	**1.085** 27.56	**.865** 21.97	**.702** 17.83
MCK-**-*- 25 PST2	**1.185** 30.10	**.965** 24.51	**.733** 18.62
MCK-**-*- 25 SST2	**1.185** 30.10	**.965** 24.51	**.802** 20.37
MCK-**-*- 31 PST2	**1.335** 33.91	**1.115** 28.32	**.883** 22.43
MCK-**-*- 31 SST2	**1.335** 33.91	**1.115** 28.32	**.952** 24.18
MCK-**-*- 37 PST2	**1.485** 37.72	**1.265** 32.13	**1.033** 26.24
MCK-**-*- 37 SST2	**1.485** 37.72	**1.265** 32.13	**1.102** 27.99

How To Specify

MCK — N1 — P — 37 P ST2

Straight Termination

Contact Type
S = Standard Socket
P = Standard Pin

Layout
9, 15, 21, 25, 31, 37

Hardware
P = Jackpost (2-56 THD)
B = No Hardware

Shell Finish
C2 = Cadmium, Yellow Chromate
N1 = Nickel, Electroless

Connector Series
(See Page 5-56)

Dimensions are shown for reference purposes only. Specifications subject to change.

Dimensions are in millimeters unless otherwise specified.

USA: +1 800 522 6752
Asia Pacific: +86 0 400 820 6015
UK: +44 800 267 666

For additional support numbers please visit www.te.com

MICRODOT MCK ST2 Series Straight Mount PCB Connectors (Continued)

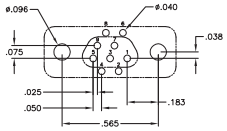

SIZE 9

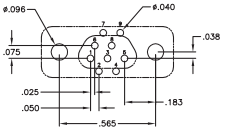

SIZE 9

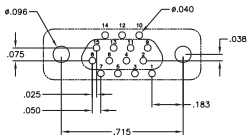

SIZE 15

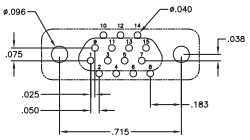

SIZE 15

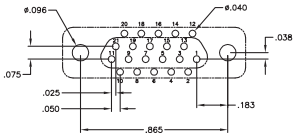

SIZE 21

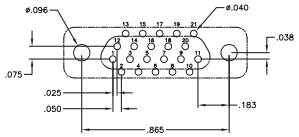

SIZE 21

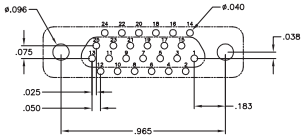

SIZE 25

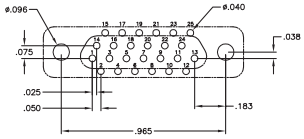

SIZE 25

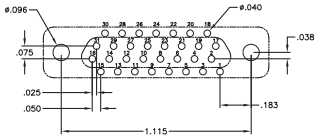

SIZE 31

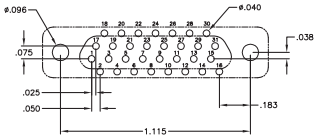

SIZE 31

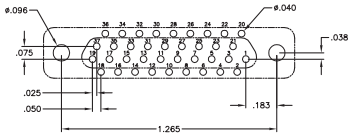

SIZE 37

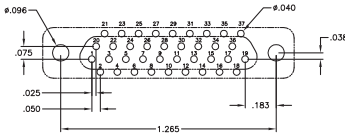

SIZE 37

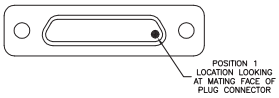

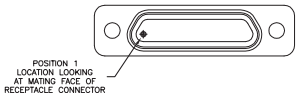

Dimensions are shown for reference purposes only. Specifications subject to change.

Dimensions are in millimeters unless otherwise specified.

USA: +1 800 522 6752
Asia Pacific: +86 0 400 820 6015
UK: +44 800 267 666

For additional support numbers please visit www.te.com

MICRODOT MCDM Series Metal Shell Connectors

Technical & Performance Data

Performance

Contact Resistance — The average mated contact resistance is 4 milliohms, with a maximum value of 8 milliohms, using standard #24 solid copper leads when measured directly behind the crimp joints of the mated pin and socket contacts. The average resistance value at 100 microvolts is 4.8 milliohms.

Dielectric Withstanding Voltage (60 Hz rms room temperature) — Solder Pots — 600 VAC at sea level; 150 VAC at 70,000 feet [21,336 m]. Wire Terminations — 750 VAC at sea level; 200 VAC at 70,000 feet [21,336m]

Vibration (Per MIL-STD-202C, Method 204-A, Condition D) — No discontinuity in excess of 1 microsecond during twelve 20 minute sweeps from 10 to 2,000 CPS at .06 double amplitude or 20 G forces, whichever is less.

Corrosion Resistance (Per MIL-STD-202C, Method 101B, Condition B) — Both mated and unmated samples do not exceed the maximum allowable contact resistance (8 milliohms) when subjected to the 48 hour salt spray test.

Durability — The contact resistance after 500 mating cycles is less than the maximum allowable, 8 milliohms.

Insulation Resistance — Greater than 5,000 megohms at room temperature for the materials listed under "Materials".

Maximum Current Carrying Capacity — No. 24 contact, 3 amperes. It must be recognized, however, that all the wires to a connector will not carry their maximum current under all environmental conditions due to wire temperature.

Contact Engaging and Separation Forces — 6 oz. [1.67N] maximum (eng.); 0.5 oz. [.14N] minimum (sep.).

Temperature Range (Operating) — Diallyl phthalate -67°F to 257°F [-55°C to +125°C].

Materials

Insulator — Diallyl phthalate per MIL-M-14, Type SDG-F, Liquid Crystal Polymer (LCP) per ASTM D5138, or RYTON per ASTM D4067.

Contacts —
Pin Contact — Copper alloy and beryllium copper alloy make up the complete construction.
Socket Contact — Copper alloy.

Body Shell — High grade aluminum alloy.

Finishes

Contacts — Standard finish is 0.000050 [0.00127] gold over copper flash per MIL-G-45204, Type II.

Body Shell — Electroless nickel per AMS 2404.

Note:
Insulators are molded into their metal shells — No bonded joint is used.

Screw Mount

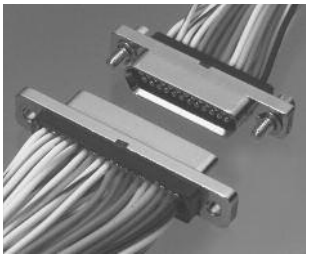

The only metal shell connector that mates with all existing plastic types. This line is ideal for external use and other applications requiring frequent disconnect and remating. When durability and reliability are paramount the metal shell connector is unsurpassed — it eliminates the need for retrofitting where new metal shell varieties must mate with older plastic types.

Originally designed for military applications, they are currently used for commercial requirements, including computers.

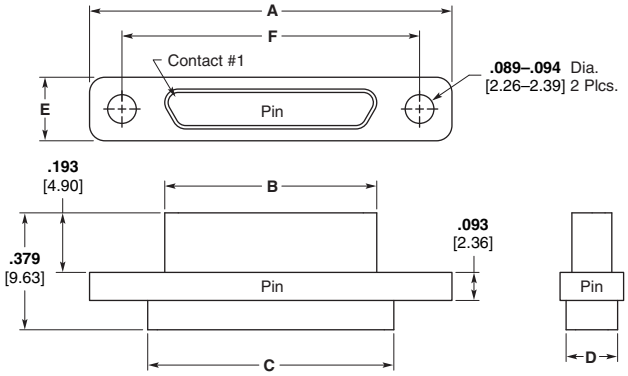

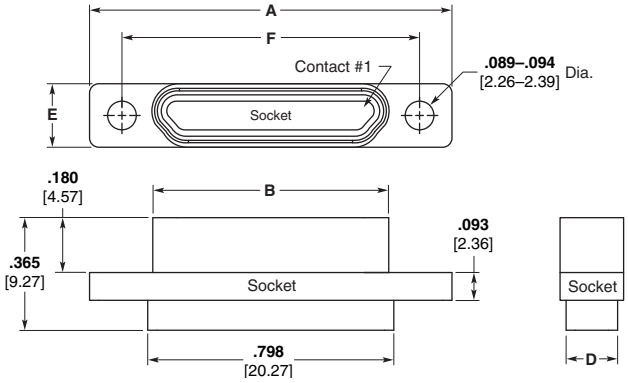

RYTON is a trademark of Chevron Chemical Company LLC.

Catalog 1308940
Revised 9-14

www.te.com

Dimensions are shown for reference purposes only. Specifications subject to change.

Dimensions are in millimeters unless otherwise specified.

USA: +1 800 522 6752
Asia Pacific: +86 0 400 820 6015
UK: +44 800 267 666

For additional support numbers please visit www.te.com

MICRODOT MCDM Series Metal Shell Connectors (Continued)

Screw Mount (Continued)

How To Specify

MCD M1 — B — 37 P 6 A 1 — 18.0

Connector Series

Shell Type and Material

M1 — Metal Shell
Screw Mount
Diallyl Phthalate or LCP Insulator

Hardware (See Pages 5-79 and 5-80)

B — No Hardware
F — Float Bushing
KM — Jackscrew, Slotted Head, High Profile
LM — Jackscrew, Slotted Head, Low Profile
QM — Jackscrew, Allen Head, High Profile
RM — Jackscrew, Allen Head, Low Profile
P — Jackpost Assembly
X — Lockscrew, Slotted Head
Y — Lockscrew, Allen Head
Z — Clip and Key (Clip Mount Only)

Layout

9, 15, 21, 25, 30, 31, 37, 51

Contact Type

P — Pin S — Socket

Wire Size

4 — #24 5 — #25 6 — #26 8 — #28 0 — #30

Wire Type

*A — Type E, 7 strand
*B — Type ET, 7 strand
*C — Type E, 19 strand
*D — Type ET, 19 strand
F — 7 strand per MIL 22759/11 (#28 AWG only)
G — 19 strand per MIL-22759/11 #26 AWG, #24 AWG
L — Copper, solid
Q — Stranded per MIL-W-22759/33

*Per MIL-W-16878

Insulation Color or Finish

1 — All white wire
2 — All yellow wire
3 — All gray wire
4 — Gold plated
5 — Tin dipped gold plated
6 — Bare (unfinished)
7 — Color coded per MIL-STD-681, System 1
8 — Special color code
9 — 10 color repeating (solid) per M83513

Lead Length in Inches (min.)

S — Solder pot for #26 max. stranded wire
X — Special, does not fit description below.

Part Number	A ± .005 [±.127]	B ± .005 [±.127]	C ± .010 [±.254]	D ± .010 [±.254]	E ± .005 [±.127]	F ± .005 [±.127]	Avg. Weight lbs. ± 5% [grams]
MCDM1-9P***	**.780** 19.81	**.290** 7.36	**.398** 10.11	**.165** 4.19	**.208** 5.28	**.565** 14.35	**.003** 1.36
MCDM1-9S***	**.780** 19.81	**.365** 9.27	**.398** 10.11	**.165** 4.19	**.208** 5.28	**.565** 14.35	**.003** 1.36
MCDM1-15P***	**.930** 23.62	**.440** 11.18	**.548** 13.92	**.165** 4.19	**.208** 5.28	**.715** 18.16	**.004** 1.81
MCDM1-15S***	**.930** 23.62	**.515** 13.08	**.548** 13.92	**.165** 4.19	**.208** 5.28	**.715** 18.16	**.004** 1.81
MCDM1-21P***	**1.080** 27.43	**.590** 14.99	**.698** 17.73	**.165** 4.19	**.208** 5.28	**.865** 21.97	**.005** 2.26
MCDM1-21S***	**1.080** 27.43	**.665** 16.89	**.698** 17.73	**.165** 4.19	**.208** 5.28	**.865** 21.97	**.005** 2.26
MCDM1-25P***	**1.180** 29.97	**.690** 17.53	**.798** 20.27	**.165** 4.19	**.208** 5.28	**.965** 24.51	**.006** 2.72
MCDM1-25S***	**1.180** 29.97	**.765** 19.43	**.798** 20.27	**.165** 4.19	**.208** 5.28	**.965** 24.51	**.005** 2.26
MCDM1-30P***	**.930** 23.62	**.435** 11.05	**.548** 13.92	**.252** 6.40	**.295** 7.49	**.715** 18.16	**.007** 3.17
MCDM1-30S***	**.930** 23.62	**.515** 13.08	**.548** 13.92	**.252** 6.40	**.295** 7.49	**.715** 18.16	**.007** 3.17
MCDM1-31P***	**1.330** 33.78	**.840** 21.34	**.948** 16.46	**.165** 4.19	**.208** 5.28	**1.115** 28.32	**.007** 3.17
MCDM1-31S***	**1.330** 33.78	**.915** 23.24	**.948** 16.46	**.165** 4.19	**.208** 5.28	**1.115** 28.32	**.006** 2.72
MCDM1-37P***	**1.480** 37.59	**.990** 25.15	**1.098** 27.89	**.165** 4.19	**.208** 5.28	**1.270** 32.26	**.007** 3.17
MCDM1-37S***	**1.480** 37.59	**1.065** 27.05	**1.098** 27.89	**.165** 4.19	**.208** 5.28	**1.270** 32.26	**.007** 3.17
MCDM1-51P***	**1.430** 36.32	**.940** 23.88	**1.048** 26.62	**.208** 5.28	**.250** 6.35	**1.215** 30.86	**.009** 4.08
MCDM1-51S***	**1.430** 36.32	**1.015** 25.78	**1.048** 26.62	**.208** 5.28	**.250** 6.35	**1.215** 30.86	**.008** 3.62

Note: Weight given is with .500 [12.7] uninsulated, solid, 24 AWG gold plated copper pigtails.

Dimensions are shown for reference purposes only. Specifications subject to change.

Dimensions are in millimeters unless otherwise specified.

USA: +1 800 522 6752
Asia Pacific: +86 0 400 820 6015
UK: +44 800 267 666

For additional support numbers please visit www.te.com

MICRODOT MCDM Series Metal Shell RF COMBOMATE Connectors

Screw Mount Coaxial Terminations

Available *now* — RF Performance in standard subminiature rectangular connectors, with VSWR values of 1.01 to 1.10 in frequencies ranging in DC to 2.3 GHz. This is the COMBOMATE Connector.

This series of connectors incorporates the same metal shells and twist pin contacts used in the widely accepted, high reliability, MCDM Series.

The RF COMBOMATE Connector Series will accommodate RG 196 A/U or RG 178 B/U coaxial cable terminated in a unique manner in standard, already tooled insert layouts. This feature results in savings in cost, time and space.

The RF COMBOMATE Connector Series will accommodate a maximum of 17 RG 196 A/U or RG 178 B/U cables in an area of less than .225 sq. inches [14.51 mm²]. Mixed layouts with coaxial terminations and standard AWG 24, 26 and 28 are also immediately available in 7 different shell sizes. The overall envelope and mounting dimensions of equivalent size of COMBOMATE Connectors are exactly the same as the standard MCDM Series.

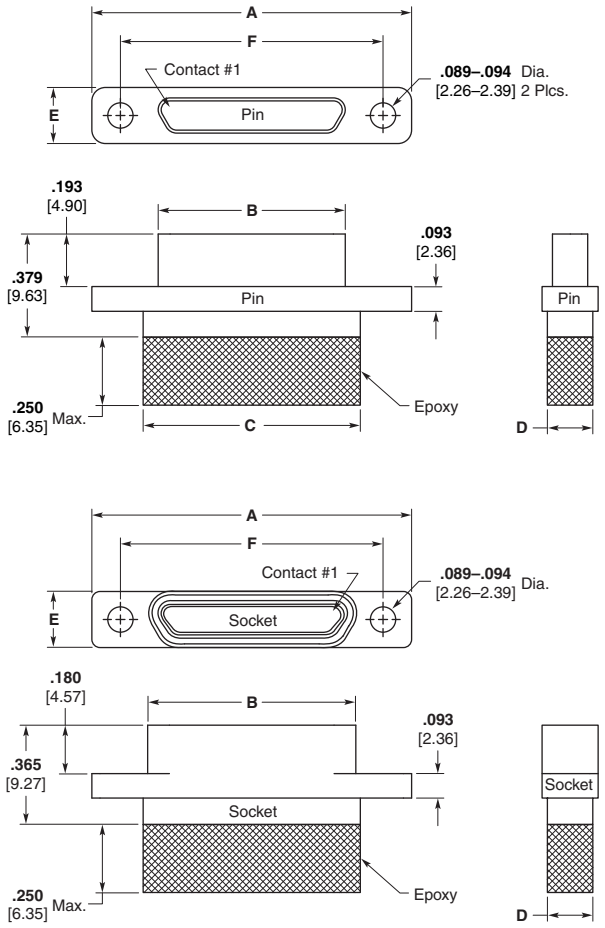

Performance Data — Coaxial Terminations

Impedance — 49.0 to 51.0 Ohms.

Voltage Standing Wave Ratio (VSWR) — 1.01:1 to 1.10:1 at frequency ranging in DC to 2.3 GHz.

Dielectric Withstanding Voltage (60 Hz rms room temperature) — 750 VAC at sea level; 200 VAC at 70,000 feet [21,336 m].

(Actual Test Data) Crosstalk (Between Adjacent Lines)				
	1 to 2	2 to 3	3 to 4	4 to 5
30 MHz	60.0 db	59.8 db	60.7 db	60.0 db
100 MHz	49.1 db	48.3 db	51.7 db	50.6 db
175 MHz	42.6 db	41.4 db	47.2 db	47.0 db
500 MHz	38.0 db	38.8 db	39.5 db	40.0 db
1000 MHz	31.6 db	32.0 db	30.0 db	32.5 db
2000 MHz	22.4 db	22.5 db	22.3 db	20.8 db
3000 MHz	21.5 db	23.9 db	21.4 db	24.2 db

Insertion Loss					
Sample	#1	#2	#3	#4	#5
30 MHz	.08 db	.08 db	.08 db	.08 db	.08 db
100 MHz	.24 db	.24 db	.25 db	.25 db	.25 db
175 MHz	.35 db	.36 db	.36 db	.34 db	.32 db
500 MHz	.58 db	.50 db	.60 db	.58 db	.48 db
1000 MHz	1.25 db	1.33 db	1.36 db	1.35 db	1.24 db
2000 MHz	1.48 db	1.71 db	1.42 db	1.40 db	1.45 db
3000 MHz	2.66 db	2.45 db	2.74 db	2.86 db	2.84 db

Note: Verification of all test data is on file at TE Connectivity and is available upon request.
All test runs using RG 196 A/U.

Dimensions are shown for reference purposes only. Specifications subject to change.

Dimensions are in millimeters unless otherwise specified.

USA: +1 800 522 6752
Asia Pacific: +86 0 400 820 6015
UK: +44 800 267 666

For additional support numbers please visit www.te.com

MICRODOT MCDM Series Metal Shell RF COMBOMATE Connectors (Continued)

Screw Mount Coaxial Terminations (Continued)

How To Specify

MCD M3 — 7 P 3 — 18.0

- **18.0** — Lead Length in Inches (min.)
- **3** — Wire Size
  - 3 — RG 196 A/U (White insulation)
  - 2 — RG 178 B/U (Brown insulation)
  - X — Special, does not fit description*
- **P** — Contact Type
  - P — Pin S — Socket
- **7** — Layout
  - 3, 5, 7, 8, 10, 12, 17
  - Maximum RF combinations using RG 196 A/U and RG 178 B/U cable
- **M3** — Shell Type and Material
  - M3 — Metal Shell
    Screw Mount
    Diallyl Phthalate or LCP Insulator
- **MCD** — Connector Series

***Ordering Criteria:** A wide variety of contact combinations, coaxial and power mixed, are available. Contact TE Connectivity for additional arrangement numbers.

Part Number	A ± .005 [± .127]	B ± .005 [± .127]	C Max.	D Max.	E ± .005 [± .127]	F ± .005 [± .127]
MCDM3-3P**	**.780** 19.81	**.290** 7.36	**.408** 10.36	**.200** 5.08	**.208** 5.28	**.565** 14.35
MCDM3-3S**	**.780** 19.81	**.365** 9.27	**.408** 10.36	**.200** 5.08	**.208** 5.28	**.565** 14.35
MCDM3-5P**	**.930** 23.62	**.440** 11.18	**.558** 14.17	**.200** 5.08	**.208** 5.28	**.715** 18.16
MCDM3-5S**	**.930** 23.62	**.515** 13.08	**.558** 14.17	**.200** 5.08	**.208** 5.28	**.715** 18.16
MCDM3-7P**	**1.080** 27.43	**.590** 14.99	**.708** 17.98	**.200** 5.08	**.208** 5.28	**.865** 21.97
MCDM3-7S**	**1.080** 27.43	**.665** 16.89	**.708** 17.98	**.200** 5.08	**.208** 5.28	**.865** 21.97
MCDM3-8P**	**1.180** 29.97	**.690** 17.53	**.808** 20.52	**.200** 5.08	**.208** 5.28	**.965** 24.51
MCDM3-8S**	**1.180** 29.97	**.765** 19.43	**.808** 20.52	**.200** 5.08	**.208** 5.28	**.965** 24.51
MCDM3-10P**	**1.330** 33.78	**.840** 21.34	**.958** 24.33	**.200** 5.08	**.208** 5.28	**1.115** 28.32
MCDM3-10S**	**1.330** 33.78	**.915** 23.24	**.958** 24.33	**.200** 5.08	**.208** 5.28	**1.115** 28.32
MCDM3-12P**	**1.480** 37.59	**.990** 25.15	**1.108** 27.89	**.200** 5.08	**.208** 5.28	**1.270** 32.26
MCDM3-12S**	**1.480** 37.59	**1.065** 27.05	**1.108** 27.89	**.200** 5.08	**.208** 5.28	**1.270** 32.26
MCDM3-17P**	**1.430** 36.32	**.940** 23.88	**1.058** 26.87	**.245** 6.22	**.250** 6.35	**1.215** 30.86
MCDM3-17S**	**1.430** 36.32	**1.015** 25.78	**1.058** 26.87	**.245** 6.22	**.250** 6.35	**1.215** 30.86

Dimensions are shown for reference purposes only. Specifications subject to change.

Dimensions are in millimeters unless otherwise specified.

USA: +1 800 522 6752
Asia Pacific: +86 0 400 820 6015
UK: +44 800 267 666

For additional support numbers please visit www.te.com

MICRODOT MCDM Series Metal Shell RF COMBOMATE Connectors (Continued)

Contact Arrangement as Viewed from the Engaging Face of the Pin Side

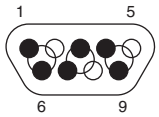

3
RG196 A/U or RG 178 B/U

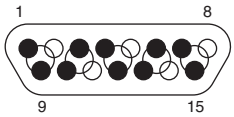

5
RG196 A/U or RG 178 B/U

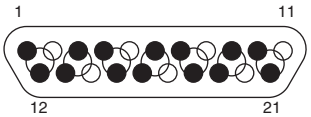

7
RG196 A/U or RG 178 B/U

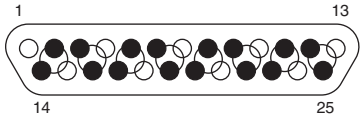

8
RG196 A/U or RG 178 B/U

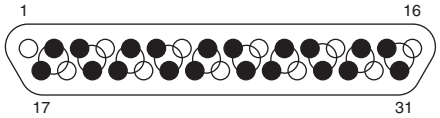

10
RG196 A/U or RG 178 B/U

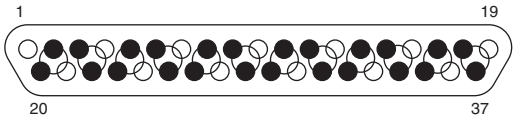

12
RG196 A/U or RG 178 B/U

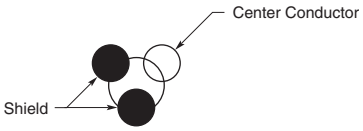

Termination Pattern

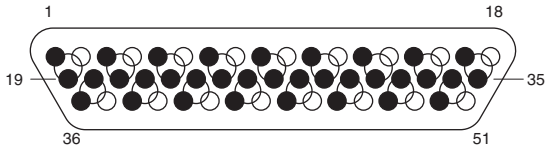

17
RG196 A/U or RG 178 B/U

Note: The above contact arrangements are the maximum densities that can be obtained in each shell size when using RG 196 A/U or RG 178 B/U cable.

Catalog 1308940
Revised 9-14

www.te.com

Dimensions are shown for reference purposes only. Specifications subject to change.

Dimensions are in millimeters unless otherwise specified.

USA: +1 800 522 6752
Asia Pacific: +86 0 400 820 6015
UK: +44 800 267 666

For additional support numbers please visit www.te.com

MICRODOT MCDM Series Metal Shell Connectors Panel Mounting — Cutout Dimensions

Panel Mounting Dimensions — MCDM

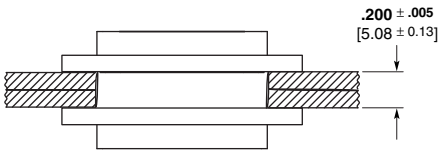

Plug and Receptacle
Rear Mounted

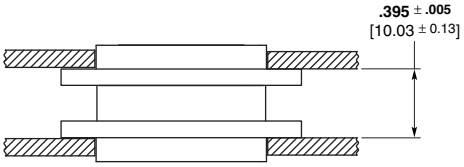

Plug and Receptacle
Front Mounted

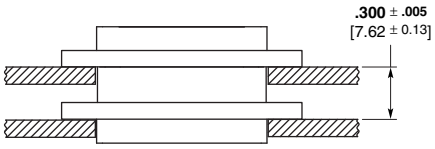

Plug Front Mounted
Receptacle Rear Mounted

Panel Cutout Dimensions

Screw Mounting

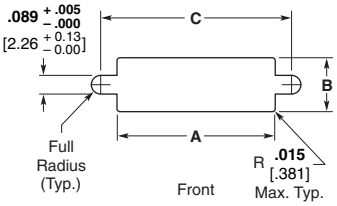

Figure 1

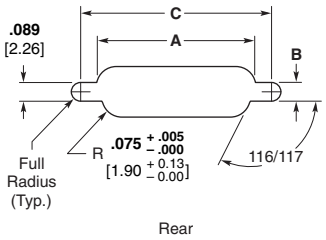

Figure 2

Note: Front mounting preferred.

Number of Contacts	Fig.	A + .004 [+ .102] − .000 [− .000]	B + .004 [+ .102] − .000 [− .000]	C + .005 [+ .127] − .000 [− .000]
9	1	**.412** [10.46]	**.177** [4.50]	**.570** [14.48]
	2	**.384** [9.75]	**.222** [5.64]	**.570** [14.48]
15	1	**.562** [14.27]	**.177** [4.50]	**.720** [18.29]
	2	**.534** [13.56]	**.222** [5.64]	**.720** [18.29]
21	1	**.712** [18.08]	**.177** [4.50]	**.870** [22.10]
	2	**.684** [17.37]	**.222** [5.64]	**.870** [22.10]
25	1	**.812** [20.62]	**.177** [4.50]	**.970** [24.64]
	2	**.784** [19.91]	**.222** [5.64]	**.970** [24.64]
31	1	**.962** [24.43]	**.177** [4.50]	**1.120** [28.45]
	2	**.934** [23.72]	**.222** [5.64]	**1.120** [28.45]
37	1	**1.112** [28.24]	**.177** [4.50]	**1.270** [32.26]
	2	**1.084** [27.53]	**.222** [5.64]	**1.270** [32.26]
51	1	**1.062** [26.97]	**.224** [5.69]	**1.220** [30.99]
	2	**1.034** [26.26]	**.264** [6.71]	**1.220** [30.99]

Catalog 1308940
Revised 9-14

www.te.com

Dimensions are shown for reference purposes only. Specifications subject to change.

Dimensions are in millimeters unless otherwise specified.

USA: +1 800 522 6752
Asia Pacific: +86 0 400 820 6015
UK: +44 800 267 666

For additional support numbers please visit www.te.com

MIL-DTL-83513 Cross Reference

MCKS (Metal Shell)

Military Part No.	MICRODOT Part No.
M83513/01-A*	MCKS-**-B- 9PS
M83513/01-B*	MCKS-**-B- 15PS
M83513/01-C*	MCKS-**-B- 21PS
M83513/01-D*	MCKS-**-B- 25PS
M83513/01-E*	MCKS-**-B- 31PS
M83513/01-F*	MCKS-**-B- 37PS
M83513/01-G*	MCKS-**-B- 51PS
M83513/01-H*	MCKS-**-B-100PS
M83513/02-A*	MCKS-**-B- 9SS
M83513/02-B*	MCKS-**-B- 15SS
M83513/02-C*	MCKS-**-B- 21SS
M83513/02-D*	MCKS-**-B- 25SS
M83513/02-E*	MCKS-**-B- 31SS
M83513/02-F*	MCKS-**-B- 37SS
M83513/02-G*	MCKS-**-B- 51SS
M83513/02-H*	MCKS-**-B-100SS
M83513/03-A01*	MCKS-**-B- 9P6G1-18.0
M83513/03-B01*	MCKS-**-B- 15P6G1-18.0
M83513/03-C01*	MCKS-**-B- 21P6G1-18.0
M83513/03-D01*	MCKS-**-B- 25P6G1-18.0
M83513/03-E01*	MCKS-**-B- 31P6G1-18.0
M83513/03-F01*	MCKS-**-B- 37P6G1-18.0
M83513/03-G01*	MCKS-**-B- 51P6G1-18.0
M83513/03-H01*	MCKS-**-B-100P6G1-18.0
M83513/03-A02*	MCKS-**-B- 9P6G1-36.0
M83513/03-B02*	MCKS-**-B- 15P6G1-36.0
M83513/03-C02*	MCKS-**-B- 21P6G1-36.0
M83513/03-D02*	MCKS-**-B- 25P6G1-36.0
M83513/03-E02*	MCKS-**-B- 31P6G1-36.0
M83513/03-F02*	MCKS-**-B- 37P6G1-36.0
M83513/03-G02*	MCKS-**-B- 51P6G1-36.0
M83513/03-H02*	MCKS-**-B-100P6G1-36.0
M83513/03-A03*	MCKS-**-B- 9P6G9-18.0
M83513/03-B03*	MCKS-**-B- 15P6G9-18.0
M83513/03-C03*	MCKS-**-B- 21P6G9-18.0
M83513/03-D03*	MCKS-**-B- 25P6G9-18.0
M83513/03-E03*	MCKS-**-B- 31P6G9-18.0
M83513/03-F03*	MCKS-**-B- 37P6G9-18.0
M83513/03-G03*	MCKS-**-B- 51P6G9-18.0
M83513/03-H03*	MCKS-**-B-100P6G9-18.0
M83513/03-A04*	MCKS-**-B- 9P6G9-36.0
M83513/03-B04*	MCKS-**-B- 15P6G9-36.0
M83513/03-C04*	MCKS-**-B- 21P6G9-36.0
M83513/03-D04*	MCKS-**-B- 25P6G9-36.0
M83513/03-E04*	MCKS-**-B- 31P6G9-36.0
M83513/03-F04*	MCKS-**-B- 37P6G9-36.0
M83513/03-G04*	MCKS-**-B- 51P6G9-36.0
M83513/03-H04*	MCKS-**-B-100P6G9-36.0
M83513/03-A05*	MCKS-**-B- 9P5L4-0.5
M83513/03-B05*	MCKS-**-B- 15P5L4-0.5
M83513/03-C05*	MCKS-**-B- 21P5L4-0.5
M83513/03-D05*	MCKS-**-B- 25P5L4-0.5
M83513/03-E05*	MCKS-**-B- 31P5L4-0.5
M83513/03-F05*	MCKS-**-B- 37P5L4-0.5
M83513/03-G05*	MCKS-**-B- 51P5L4-0.5
M83513/03-H05*	MCKS-**-B-100P5L4-0.5
M83513/03-A06*	MCKS-**-B- 9P5L4-1.0
M83513/03-B06*	MCKS-**-B- 15P5L4-1.0
M83513/03-C06*	MCKS-**-B- 21P5L4-1.0
M83513/03-D06*	MCKS-**-B- 25P5L4-1.0

Military Part No.	MICRODOT Part No.
M83513/03-E06*	MCKS-**-B- 31P5L4-1.0
M83513/03-F06*	MCKS-**-B- 37P5L4-1.0
M83513/03-G06*	MCKS-**-B- 51P5L4-1.0
M83513/03-H06*	MCKS-**-B-100P5L4-1.0
M83513/03-A07*	MCKS-**-B- 9P5L5-0.5
M83513/03-B07*	MCKS-**-B- 15P5L5-0.5
M83513/03-C07*	MCKS-**-B- 21P5L5-0.5
M83513/03-D07*	MCKS-**-B- 25P5L5-0.5
M83513/03-E07*	MCKS-**-B- 31P5L5-0.5
M83513/03-F07*	MCKS-**-B- 37P5L5-0.5
M83513/03-G07*	MCKS-**-B- 51P5L5-0.5
M83513/03-H07*	MCKS-**-B-100P5L5-0.5
M83513/03-A08*	MCKS-**-B- 9P5L5-1.0
M83513/03-B08*	MCKS-**-B- 15P5L5-1.0
M83513/03-C08*	MCKS-**-B- 21P5L5-1.0
M83513/03-D08*	MCKS-**-B- 25P5L5-1.0
M83513/03-E08*	MCKS-**-B- 31P5L5-1.0
M83513/03-F08*	MCKS-**-B- 37P5L5-1.0
M83513/03-G08*	MCKS-**-B- 51P5L5-1.0
M83513/03-H08*	MCKS-**-B-100P5L5-1.0
M83513/03-A09*	MCKS-**-B- 9P6Q1-18.0
M83513/03-B09*	MCKS-**-B- 15P6Q1-18.0
M83513/03-C09*	MCKS-**-B- 21P6Q1-18.0
M83513/03-D09*	MCKS-**-B- 25P6Q1-18.0
M83513/03-E09*	MCKS-**-B- 31P6Q1-18.0
M83513/03-F09*	MCKS-**-B- 37P6Q1-18.0
M83513/03-G09*	MCKS-**-B- 51P6Q1-18.0
M83513/03-H09*	MCKS-**-B-100P6Q1-18.0
M83513/03-A10*	MCKS-**-B- 9P6Q1-36.0
M83513/03-B10*	MCKS-**-B- 15P6Q1-36.0
M83513/03-C10*	MCKS-**-B- 21P6Q1-36.0
M83513/03-D10*	MCKS-**-B- 25P6Q1-36.0
M83513/03-E10*	MCKS-**-B- 31P6Q1-36.0
M83513/03-F10*	MCKS-**-B- 37P6Q1-36.0
M83513/03-G10*	MCKS-**-B- 51P6Q1-36.0
M83513/03-H10*	MCKS-**-B-100P6Q1-36.0
M83513/03-A11*	MCKS-**-B- 9P6Q9-18.0
M83513/03-B11*	MCKS-**-B- 15P6Q9-18.0
M83513/03-C11*	MCKS-**-B- 21P6Q9-18.0
M83513/03-D11*	MCKS-**-B- 25P6Q9-18.0
M83513/03-E11*	MCKS-**-B- 31P6Q9-18.0
M83513/03-F11*	MCKS-**-B- 37P6Q9-18.0
M83513/03-G11*	MCKS-**-B- 51P6Q9-18.0
M83513/03-H11*	MCKS-**-B-100P6Q9-18.0
M83513/03-A12*	MCKS-**-B- 9P6Q9-36.0
M83513/03-B12*	MCKS-**-B- 15P6Q9-36.0
M83513/03-C12*	MCKS-**-B- 21P6Q9-36.0
M83513/03-D12*	MCKS-**-B- 25P6Q9-36.0
M83513/03-E12*	MCKS-**-B- 31P6Q9-36.0
M83513/03-F12*	MCKS-**-B- 37P6Q9-36.0
M83513/03-G12*	MCKS-**-B- 51P6Q9-36.0
M83513/03-H12*	MCKS-**-B-100P6Q9-36.0
M83513/03-A13*	MCKS-**-B- 9P6G1-72.0
M83513/03-B13*	MCKS-**-B- 1 5P6G1-72.0
M83513/03-C13*	MCKS-**-B- 21P6G1-72.0
M83513/03-D13*	MCKS-**-B- 25P6G1-72.0
M83513/03-E13*	MCKS-**-B- 31P6G1-72.0
M83513/03-F13*	MCKS-**-B- 37P6G1-72.0
M83513/03-G13*	MCKS-**-B- 51P6G1-72.0
M83513/03-H13*	MCKS-**-B-100P6G1-72.0

Military Part No.	MICRODOT Part No.
M83513/03-A14*	MCKS-**-B- 9P6G9-72.0
M83513/03-B14*	MCKS-**-B- 15P6G9-72.0
M83513/03-C14*	MCKS-**-B- 21P6G9-72.0
M83513/03-D14*	MCKS-**-B- 25P6G9-72.0
M83513/03-E14*	MCKS-**-B- 31P6G9-72.0
M83513/03-F14*	MCKS-**-B- 37P6G9-72.0
M83513/03-G14*	MCKS-**-B- 51P6G9-72.0
M83513/03-H14*	MCKS-**-B-100P6G9-72.0
M83513/03-A15*	MCKS-**-B- 9P6Q1-72.0
M83513/03-B15*	MCKS-**-B- 15P6Q1-72.0
M83513/03-C15*	MCKS-**-B- 21P6Q1-72.0
M83513/03-D15*	MCKS-**-B- 25P6Q1-72.0
M83513/03-E15*	MCKS-**-B- 31P6Q1-72.0
M83513/03-F15*	MCKS-**-B- 37P6Q1-72.0
M83513/03-G15*	MCKS-**-B- 51P6Q1-72.0
M83513/03-H15*	MCKS-**-B-100P6Q1-72.0
M83513/03-A16*	MCKS-**-B- 9P6Q9-72.0
M83513/03-B16*	MCKS-**-B- 15P6Q9-72.0
M83513/03-C16*	MCKS-**-B- 21P6Q9-72.0
M83513/03-D16*	MCKS-**-B- 25P6Q9-72.0
M83513/03-E16*	MCKS-**-B- 31P6Q9-72.0
M83513/03-F16*	MCKS-**-B- 37P6Q9-72.0
M83513/03-G16*	MCKS-**-B- 51P6Q9-72.0
M83513/03-H16*	MCKS-**-B-100P6Q9-72.0
M83513/04-A01*	MCKS-**-B- 9S6G1-18.0
M83513/04-B01*	MCKS-**-B- 15S6G1-18.0
M83513/04-C01*	MCKS-**-B- 21S6G1-18.0
M83513/04-D01*	MCKS-**-B- 25S6G1-18.0
M83513/04-E01*	MCKS-**-B- 31S6G1-18.0
M83513/04-F01*	MCKS-**-B- 37S6G1-18.0
M83513/04-G01*	MCKS-**-B- 51S6G1-18.0
M83513/04-H01*	MCKS-**-B-100S6G1-18.0
M83513/04-A02*	MCKS-**-B- 9S6G1-36.0
M83513/04-B02*	MCKS-**-B- 15S6G1-36.0
M83513/04-C02*	MCKS-**-B- 21S6G1-36.0
M83513/04-D02*	MCKS-**-B- 25S6G1-36.0
M83513/04-E02*	MCKS-**-B- 31S6G1-36.0
M83513/04-F02*	MCKS-**-B- 37S6G1-36.0
M83513/04-G02*	MCKS-**-B- 51S6G1-36.0
M83513/04-H02*	MCKS-**-B-100S6G1-36.0
M83513/04-A03*	MCKS-**-B- 9S6G9-18.0
M83513/04-B03*	MCKS-**-B- 15S6G9-18.0
M83513/04-C03*	MCKS-**-B- 21S6G9-18.0
M83513/04-D03*	MCKS-**-B- 25S6G9-18.0
M83513/04-E03*	MCKS-**-B- 31S6G9-18.0
M83513/04-F03*	MCKS-**-B- 37S6G9-18.0
M83513/04-G03*	MCKS-**-B- 51S6G9-18.0
M83513/04-H03*	MCKS-**-B-100S6G9-18.0
M83513/04-A04*	MCKS-**-B- 9S6G9-36.0
M83513/04-B04*	MCKS-**-B- 15S6G9-36.0
M83513/04-C04*	MCKS-**-B- 21S6G9-36.0
M83513/04-D04*	MCKS-**-B- 25S6G9-36.0
M83513/04-E04*	MCKS-**-B- 31S6G9-36.0
M83513/04-F04*	MCKS-**-B- 37S6G9-36.0
M83513/04-G04*	MCKS-**-B- 51S6G9-36.0
M83513/04-H04*	MCKS-**-B-100S6G9-36.0
M83513/04-A05*	MCKS-**-B- 9S5L4-0.5
M83513/04-B05*	MCKS-**-B- 15S5L4-0.5
M83513/04-C05*	MCKS-**-B- 21S5L4-0.5
M83513/04-D05*	MCKS-**-B- 25S5L4-0.5

Catalog 1308940
Revised 9-14

www.te.com

Dimensions are shown for reference purposes only. Specifications subject to change.

Dimensions are in millimeters unless otherwise specified.

USA: +1 800 522 6752
Asia Pacific: +86 0 400 820 6015
UK: +44 800 267 666

For additional support numbers please visit www.te.com

MIL-DTL-83513 Cross Reference (Continued)

MCKS (Metal Shell) (Continued)

Military Part No.	MICRODOT Part No.
M83513/04-E05*	MCKS-**-B- 31S5L4-0.5
M83513/04-F05*	MCKS-**-B- 37S5L4-0.5
M83513/04-G05*	MCKS-**-B- 51S5L4-0.5
M83513/04-H05*	MCKS-**-B-100S5L4-0.5
M83513/04-A06*	MCKS-**-B- 9S5L4-1.0
M83513/04-B06*	MCKS-**-B- 15S5L4-1.0
M83513/04-C06*	MCKS-**-B- 21S5L4-1.0
M83513/04-D06*	MCKS-**-B- 25S5L4-1.0
M83513/04-E06*	MCKS-**-B- 31S5L4-1.0
M83513/04-F06*	MCKS-**-B- 37S5L4-1.0
M83513/04-G06*	MCKS-**-B- 51S5L4-1.0
M83513/04-H06*	MCKS-**-B-100S5L4-1.0
M83513/04-A07*	MCKS-**-B- 9S5L5-0.5
M83513/04-B07*	MCKS-**-B- 15S5L5-0.5
M83513/04-C07*	MCKS-**-B- 21S5L5-0.5
M83513/04-D07*	MCKS-**-B- 25S5L5-0.5
M83513/04-E07*	MCKS-**-B- 31S5L5-0.5
M83513/04-F07*	MCKS-**-B- 37S5L5-0.5
M83513/04-G07*	MCKS-**-B- 51S5L5-0.5
M83513/04-H07*	MCKS-**-B-100S5L5-0.5
M83513/04-A08*	MCKS-**-B- 9S5L5-1.0
M83513/04-B08*	MCKS-**-B- 15S5L5-1.0
M83513/04-C08*	MCKS-**-B- 21S5L5-1.0
M83513/04-D08*	MCKS-**-B- 25S5L5-1.0
M83513/04-E08*	MCKS-**-B- 31S5L5-1.0
M83513/04-F08*	MCKS-**-B- 37S5L5-1.0
M83513/04-G08*	MCKS-**-B- 51S5L5-1.0
M83513/04-H08*	MCKS-**-B-100S5L5-1.0
M83513/04-A09*	MCKS-**-B- 9S6Q1-18.0
M83513/04-B09*	MCKS-**-B- 15S6Q1-18.0
M83513/04-C09*	MCKS-**-B- 21S6Q1-18.0

Military Part No.	MICRODOT Part No.
M83513/04-D09*	MCKS-**-B- 25S6Q1-18.0
M83513/04-E09*	MCKS-**-B- 31S6Q1-18.0
M83513/04-F09*	MCKS-**-B- 37S6Q1-18.0
M83513/04-G09*	MCKS-**-B- 51S6Q1-18.0
M83513/04-H09*	MCKS-**-B-100S6Q1-18.0
M83513/04-A10*	MCKS-**-B- 9S6Q1-36.0
M83513/04-B10*	MCKS-**-B- 15S6Q1-36.0
M83513/04-C10*	MCKS-**-B- 21S6Q1-36.0
M83513/04-D10*	MCKS-**-B- 25S6Q1-36.0
M83513/04-E10*	MCKS-**-B- 31S6Q1-36.0
M83513/04-F10*	MCKS-**-B- 37S6Q1-36.0
M83513/04-G10*	MCKS-**-B- 51S6Q1-36.0
M83513/04-H10*	MCKS-**-B-100S6Q1-36.0
M83513/04-A11*	MCKS-**-B- 9S6Q9-18.0
M83513/04-B11*	MCKS-**-B- 15S6Q9-18.0
M83513/04-C11*	MCKS-**-B- 21S6Q9-18.0
M83513/04-D11*	MCKS-**-B- 25S6Q9-18.0
M83513/04-E11*	MCKS-**-B- 31S6Q9-18.0
M83513/04-F11*	MCKS-**-B- 37S6Q9-18.0
M83513/04-G11*	MCKS-**-B- 51S6Q9-18.0
M83513/04-H11*	MCKS-**-B-100S6Q9-18.0
M83513/04-A12*	MCKS-**-B- 9S6Q9-36.0
M83513/04-B12*	MCKS-**-B- 15S6Q9-36.0
M83513/04-C12*	MCKS-**-B- 21S6Q9-36.0
M83513/04-D12*	MCKS-**-B- 25S6Q9-36.0
M83513/04-E12*	MCKS-**-B- 31S6Q9-36.0
M83513/04-F12*	MCKS-**-B- 37S6Q9-36.0
M83513/04-G12*	MCKS-**-B- 51S6Q9-36.0
M83513/04-H12*	MCKS-**-B-100S6Q9-36.0
M83513/04-A13*	MCKS-**-B- 9S6G1-72.0
M83513/04-B13*	MCKS-**-B- 15S6G1-72.0

Military Part No.	MICRODOT Part No.
M83513/04-C13*	MCKS-**-B- 21S6G1-72.0
M83513/04-D13*	MCKS-**-B- 25S6G1-72.0
M83513/04-E13*	MCKS-**-B- 31S6G1-72.0
M83513/04-F13*	MCKS-**-B- 37S6G1-72.0
M83513/04-G13*	MCKS-**-B- 51S6G1-72.0
M83513/04-H13*	MCKS-**-B-100S6G1-72.0
M83513/04-A14*	MCKS-**-B- 9S6G9-72.0
M83513/04-B14*	MCKS-**-B- 15S6G9-72.0
M83513/04-C14*	MCKS-**-B- 21S6G9-72.0
M83513/04-D14*	MCKS-**-B- 25S6G9-72.0
M83513/04-E14*	MCKS-**-B- 31S6G9-72.0
M83513/04-F14*	MCKS-**-B- 37S6G9-72.0
M83513/04-G14*	MCKS-**-B- 51S6G9-72.0
M83513/04-H14*	MCKS-**-B-100S6G9-72.0
M83513/04-A15*	MCKS-**-B- 9S6Q1-72.0
M83513/04-B15*	MCKS-**-B- 15S6Q1-72.0
M83513/04-C15*	MCKS-**-B- 21S6Q1-72.0
M83513/04-D15*	MCKS-**-B- 25S6Q1-72.0
M83513/04-E15*	MCKS-**-B- 31S6Q1-72.0
M83513/04-F15*	MCKS-**-B- 37S6Q1-72.0
M83513/04-G15*	MCKS-**-B- 51S6Q1-72.0
M83513/04-H15*	MCKS-**-B-100S6Q1-72.0
M83513/04-A16*	MCKS-**-B- 9S6Q9-72.0
M83513/04-B16*	MCKS-**-B- 15S6Q9-72.0
M83513/04-C16*	MCKS-**-B- 21S6Q9-72.0
M83513/04-D16*	MCKS-**-B- 25S6Q9-72.0
M83513/04-E16*	MCKS-**-B- 31S6Q9-72.0
M83513/04-F16*	MCKS-**-B- 37S6Q9-72.0
M83513/04-G16*	MCKS-**-B- 51S6Q9-72.0
M83513/04-H16*	MCKS-**-B-100S6Q9-72.0

*C = Cadmium or N = Nickel (space applications only)
**C2 = Cadmium or N1 = Nickel (space applications only)

Hardware

Military Part No.	MICRODOT Part No.
M83513/05-02	"A. HD, J/S, L.F, #2"
M83513/05-12	"A. HD, J/S, L.F, #4"
M83513/05-03	"A. HD, J/S,H.F, #2"
M83513/05-13	"A. HD, J/S, H.F. #4"

Military Part No.	MICRODOT Part No.
M83513/05-05	"S. HD, J/S, L.F, #2"
M83513/05-15	"S. HD, J/S, L.F, #4"
M83513/05-06	"S. HD, J/S, H.F, #2"
M83513/05-16	"S. HD, J/S, H.F, #4"

Military Part No.	MICRODOT Part No.
M83513/05-07	"JACKPOST ASSY #2"
M83513/05-17	"JACKPOST ASSY, #4"

MCDR (Plastic Shell)

Military Part No.	MICRODOT Part No.
M83513/06-A	MCDR3-B- 9PS
M83513/06-B	MCDR3-B-15PS
M83513/06-C	MCDR3-B-21PS
M83513/06-D	MCDR3-B-25PS
M83513/06-E	MCDR3-B-31PS
M83513/06-F	MCDR3-B-37PS
M83513/06-G	MCDR3-B-51PS
M83513/07-A	MCDR3-B- 9SS
M83513/07-B	MCDR3-B-15SS
M83513/07-C	MCDR3-B-21SS
M83513/07-D	MCDR3-B-25SS
M83513/07-E	MCDR3-B-31SS
M83513/07-F	MCDR3-B-37SS

Military Part No.	MICRODOT Part No.
M83513/07-G	MCDR3-B-51SS
M83513/08-A01	MCDR3-B- 9P6G1-18.0
M83513/08-B01	MCDR3-B-15P6G1-18.0
M83513/08-C01	MCDR3-B-21P6G1-18.0
M83513/08-D01	MCDR3-B-25P6G1-18.0
M83513/08-E01	MCDR3-B-31P6G1-18.0
M83513/08-F01	MCDR3-B-37P6G1-18.0
M83513/08-G01	MCDR3-B-51P6G1-18.0
M83513/08-A02	MCDR3-B- 9P6G1-36.0
M83513/08-B02	MCDR3-B-15P6G1-36.0
M83513/08-C02	MCDR3-B-21P6G1-36.0
M83513/08-D02	MCDR3-B-25P6G1-36.0
M83513/08-E02	MCDR3-B-31P6G1-36.0

Military Part No.	MICRODOT Part No.
M83513/08-F02	MCDR3-B-37P6G1-36.0
M83513/08-G02	MCDR3-B-51P6G1-36.0
M83513/08-A03	MCDR3-B- 9P6G9-18.0
M83513/08-B03	MCDR3-B-15P6G9-18.0
M83513/08-C03	MCDR3-B-21P6G9-18.0
M83513/08-D03	MCDR3-B-25P6G9-18.0
M83513/08-E03	MCDR3-B-31P6G9-18.0
M83513/08-F03	MCDR3-B-37P6G9-18.0
M83513/08-G03	MCDR3-B-51P6G9-18.0
M83513/08-A04	MCDR3-B- 9P6G9-36.0
M83513/08-B04	MCDR3-B-15P6G9-36.0
M83513/08-C04	MCDR3-B-21P6G9-36.0
M83513/08-D04	MCDR3-B-25P6G9-36.0

Catalog 1308940
Revised 9-14

www.te.com

Dimensions are shown for reference purposes only. Specifications subject to change.

Dimensions are in millimeters unless otherwise specified.

USA: +1 800 522 6752
Asia Pacific: +86 0 400 820 6015
UK: +44 800 267 666

For additional support numbers please visit www.te.com

MIL-DTL-83513 Cross Reference (Continued)

MCDR (Plastic Shell) (Continued)

Military Part No.	MICRODOT Part No.
M83513/08-E04	MCDR3-B-31P6G9-36.0
M83513/08-F04	MCDR3-B-37P6G9-36.0
M83513/08-G04	MCDR3-B-51P6G9-36.0
M83513/08-A05	MCDR3-B- 9P5L4-0.5
M83513/08-B05	MCDR3-B-15P5L4-0.5
M83513/08-C05	MCDR3-B-21P5L4-0.5
M83513/08-D05	MCDR3-B-25P5L4-0.5
M83513/08-E05	MCDR3-B-31P5L4-0.5
M83513/08-F05	MCDR3-B-37P5L4-0.5
M83513/08-G05	MCDR3-B-51P5L4-0.5
M83513/08-A06	MCDR3-B- 9P5L4-1.0
M83513/08-B06	MCDR3-B-15P5L4-1.0
M83513/08-C06	MCDR3-B-21P5L4-1.0
M83513/08-D06	MCDR3-B-25P5L4-1.0
M83513/08-E06	MCDR3-B-31P5L4-1.0
M83513/08-F06	MCDR3-B-37P5L4-1.0
M83513/08-G06	MCDR3-B-51P5L4-1.0
M83513/08-A07	MCDR3-B- 9P5L5-0.5
M83513/08-B07	MCDR3-B-15P5L5-0.5
M83513/08-C07	MCDR3-B-21P5L5-0.5
M83513/08-D07	MCDR3-B-25P5L5-0.5
M83513/08-E07	MCDR3-B-31P5L5-0.5
M83513/08-F07	MCDR3-B-37P5L5-0.5
M83513/08-G07	MCDR3-B-51P5L5-0.5
M83513/08-A08	MCDR3-B- 9P5L5-1.0
M83513/08-B08	MCDR3-B-15P5L5-1.0
M83513/08-C08	MCDR3-B-21P5L5-1.0
M83513/08-D08	MCDR3-B-25P5L5-1.0
M83513/08-E08	MCDR3-B-31P5L5-1.0
M83513/08-F08	MCDR3-B-37P5L5-1.0
M83513/08-G08	MCDR3-B-51P5L5-1.0
M83513/08-A09	MCDR3-B- 9P6Q1-18.0
M83513/08-B09	MCDR3-B-15P6Q1-18.0
M83513/08-C09	MCDR3-B-21P6Q1-18.0
M83513/08-D09	MCDR3-B-25P6Q1-18.0
M83513/08-E09	MCDR3-B-31P6Q1-18.0
M83513/08-F09	MCDR3-B-37P6Q1-18.0
M83513/08-G09	MCDR3-B-51P6Q1-18.0
M83513/08-A10	MCDR3-B- 9P6Q1-36.0
M83513/08-B10	MCDR3-B-15P6Q1-36.0
M83513/08-C10	MCDR3-B-21P6Q1-36.0
M83513/08-D10	MCDR3-B-25P6Q1-36.0
M83513/08-E10	MCDR3-B-31P6Q1-36.0
M83513/08-F10	MCDR3-B-37P6Q1-36.0
M83513/08-G10	MCDR3-B-51P6Q1-36.0
M83513/08-A11	MCDR3-B- 9P6Q9-18.0
M83513/08-B11	MCDR3-B-15P6Q9-18.0
M83513/08-C11	MCDR3-B-21P6Q9-18.0
M83513/08-D11	MCDR3-B-25P6Q9-18.0
M83513/08-E11	MCDR3-B-31P6Q9-18.0
M83513/08-F11	MCDR3-B-37P6Q9-18.0
M83513/08-G11	MCDR3-B-51P6Q9-18.0
M83513/08-A12	MCDR3-B- 9P6Q9-36.0
M83513/08-B12	MCDR3-B-15P6Q9-36.0
M83513/08-C12	MCDR3-B-21P6Q9-36.0
M83513/08-D12	MCDR3-B-25P6Q9-36.0
M83513/08-E12	MCDR3-B-31P6Q9-36.0
M83513/08-F12	MCDR3-B-37P6Q9-36.0
M83513/08-G12	MCDR3-B-51P6Q9-36.0
M83513/08-A13	MCDR3-B- 9P6G1-72.0

Military Part No.	MICRODOT Part No.
M83513/08-B13	MCDR3-B-15P6G1-72.0
M83513/08-C13	MCDR3-B-21P6G1-72.0
M83513/08-D13	MCDR3-B-25P6G1-72.0
M83513/08-E13	MCDR3-B-31P6G1-72.0
M83513/08-F13	MCDR3-B-37P6G1-72.0
M83513/08-G13	MCDR3-B-51P6G1-72.0
M83513/08-A14	MCDR3-B- 9P6G9-72.0
M83513/08-B14	MCDR3-B-15P6G9-72.0
M83513/08-C14	MCDR3-B-21P6G9-72.0
M83513/08-D14	MCDR3-B-25P6G9-72.0
M83513/08-E14	MCDR3-B-31P6G9-72.0
M83513/08-F14	MCDR3-B-37P6G9-72.0
M83513/08-G14	MCDR3-B-51P6G9-72.0
M83513/08-A15	MCDR3-B- 9P6Q1-72.0
M83513/08-B15	MCDR3-B-15P6Q1-72.0
M83513/08-C15	MCDR3-B-21P6Q1-72.0
M83513/08-D15	MCDR3-B-25P6Q1-72.0
M83513/08-E15	MCDR3-B-31P6Q1-72.0
M83513/08-F15	MCDR3-B-37P6Q1-72.0
M83513/08-G15	MCDR3-B-51P6Q1-72.0
M83513/08-A16	MCDR3-B- 9P6Q9-72.0
M83513/08-B16	MCDR3-B-15P6Q9-72.0
M83513/08-C16	MCDR3-B-21P6Q9-72.0
M83513/08-D16	MCDR3-B-25P6Q9-72.0
M83513/08-E16	MCDR3-B-31P6Q9-72.0
M83513/08-F16	MCDR3-B-37P6Q9-72.0
M83513/08-G16	MCDR3-B-51P6Q9-72.0
M83513/09-A01	MCDR3-B- 9S6G1-18.0
M83513/09-B01	MCDR3-B-15S6G1-18.0
M83513/09-C01	MCDR3-B-21S6G1-18.0
M83513/09-D01	MCDR3-B-25S6G1-18.0
M83513/09-E01	MCDR3-B-31S6G1-18.0
M83513/09-F01	MCDR3-B-37S6G1-18.0
M83513/09-G01	MCDR3-B-51S6G1-18.0
M83513/09-A02	MCDR3-B- 9S6G1-36.0
M83513/09-B02	MCDR3-B-15S6G1-36.0
M83513/09-C02	MCDR3-B-21S6G1-36.0
M83513/09-D02	MCDR3-B-25S6G1-36.0
M83513/09-E02	MCDR3-B-31S6G1-36.0
M83513/09-F02	MCDR3-B-37S6G1-36.0
M83513/09-G02	MCDR3-B-51S6G1-36.0
M83513/09-A03	MCDR3-B- 9S6G9-18.0
M83513/09-B03	MCDR3-B- 15S6G9-18.0
M83513/09-C03	MCDR3-B- 21S6G9-18.0
M83513/09-D03	MCDR3-B-25S6G9-18.0
M83513/09-E03	MCDR3-B-31S6G9-18.0
M83513/09-F03	MCDR3-B-37S6G9-18.0
M83513/09-G03	MCDR3-B-51S6G9-18.0
M83513/09-A04	MCDR3-B- 9S6G9-36.0
M83513/09-B04	MCDR3-B-15S6G9-36.0
M83513/09-C04	MCDR3-B-21S6G9-36.0
M83513/09-D04	MCDR3-B-25S6G9-36.0
M83513/09-E04	MCDR3-B-31S6G9-36.0
M83513/09-F04	MCDR3-B-37S6G9-36.0
M83513/09-G04	MCDR3-B-51S6G9-36.0
M83513/09-A05	MCDR3-B- 9S5L4-0.5
M83513/09-B05	MCDR3-B-15S5L4-0.5
M83513/09-C05	MCDR3-B-21S5L4-0.5
M83513/09-D05	MCDR3-B-25S5L4-0.5
M83513/09-E05	MCDR3-B-31S5L4-0.5

Military Part No.	MICRODOT Part No.
M83513/09-F05	MCDR3-B-37S5L4-0.5
M83513/09-G05	MCDR3-B-51S5L4-0.5
M83513/09-A06	MCDR3-B- 9S5L4-1.0
M83513/09-B06	MCDR3-B-15S5L4-1.0
M83513/09-C06	MCDR3-B-21S5L4-1.0
M83513/09-D06	MCDR3-B-25S5L4-1.0
M83513/09-E06	MCDR3-B-31S5L4-1.0
M83513/09-F06	MCDR3-B-37S5L4-1.0
M83513/09-G06	MCDR3-B-51S5L4-1.0
M83513/09-A07	MCDR3-B- 9S5L5-0.5
M83513/09-B07	MCDR3-B-15S5L5-0.5
M83513/09-C07	MCDR3-B-21S5L5-0.5
M83513/09-D07	MCDR3-B-25S5L5-0.5
M83513/09-E07	MCDR3-B-31S5L5-0.5
M83513/09-F07	MCDR3-B-37S5L5-0.5
M83513/09-G07	MCDR3-B-51S5L5-0.5
M83513/09-A08	MCDR3-B- 9S5L5-1.0
M83513/09-B08	MCDR3-B-15S5L5-1.0
M83513/09-C08	MCDR3-B-21S5L5-1.0
M83513/09-D08	MCDR3-B-25S5L5-1.0
M83513/09-E08	MCDR3-B-31S5L5-1.0
M83513/09-F08	MCDR3-B-37S5L5-1.0
M83513/09-G08	MCDR3-B-51S5L5-1.0
M83513/09-A09	MCDR3-B- 9S6Q1-18.0
M83513/09-B09	MCDR3-B-15S6Q1-18.0
M83513/09-C09	MCDR3-B-21S6Q1-18.0
M83513/09-D09	MCDR3-B-25S6Q1-18.0
M83513/09-E09	MCDR3-B-31S6Q1-18.0
M83513/09-F09	MCDR3-B-37S6Q1-18.0
M83513/09-G09	MCDR3-B-51S6Q1-18.0
M83513/09-A10	MCDR3-B- 9S6Q1-36.0
M83513/09-B10	MCDR3-B-15S6Q1-36.0
M83513/09-C10	MCDR3-B-21S6Q1-36.0
M83513/09-D10	MCDR3-B-25S6Q1-36.0
M83513/09-E10	MCDR3-B-31S6Q1-36.0
M83513/09-F10	MCDR3-B-37S6Q1-36.0
M83513/09-G10	MCDR3-B-51S6Q1-36.0
M83513/09-A11	MCDR3-B- 9S6Q9-18.0
M83513/09-B11	MCDR3-B-15S6Q9-18.0
M83513/09-C11	MCDR3-B-21S6Q9-18.0
M83513/09-D11	MCDR3-B-25S6Q9-18.0
M83513/09-E11	MCDR3-B-31S6Q9-18.0
M83513/09-F11	MCDR3-B-37S6Q9-18.0
M83513/09-G11	MCDR3-B-51S6Q9-18.0
M83513/09-A12	MCDR3-B- 9S6Q9-36.0
M83513/09-B12	MCDR3-B-15S6Q9-36.0
M83513/09-C12	MCDR3-B-21S6Q9-36.0
M83513/09-D12	MCDR3-B-25S6Q9-36.0
M83513/09-E12	MCDR3-B-31S6Q9-36.0
M83513/09-F12	MCDR3-B-37S6Q9-36.0
M83513/09-G12	MCDR3-B-51S6Q9-36.0
M83513/09-A13	MCDR3-B- 9S6G1-72.0
M83513/09-B13	MCDR3-B-15S6G1-72.0
M83513/09-C13	MCDR3-B-21S6G1-72.0
M83513/09-D13	MCDR3-B-25S6G1-72.0
M83513/09-E13	MCDR3-B-31S6G1-72.0
M83513/09-F13	MCDR3-B-37S6G1-72.0
M83513/09-G13	MCDR3-B-51S6G1-72.0
M83513/09-A14	MCDR3-B- 9S6G9-72.0
M83513/09-B14	MCDR3-B-15S6G9-72.0

Catalog 1308940
Revised 9-14

www.te.com

Dimensions are shown for reference purposes only. Specifications subject to change.

Dimensions are in millimeters unless otherwise specified.

USA: +1 800 522 6752
Asia Pacific: +86 0 400 820 6015
UK: +44 800 267 666

For additional support numbers please visit www.te.com

MIL-DTL-83513 Cross Reference (Continued)

MCDR (Plastic Shell) (Continued)

Military Part No.	MICRODOT Part No.
M83513/09-C14	MCDR3-B-21S6G9-72.0
M83513/09-D14	MCDR3-B-25S6G9-72.0
M83513/09-E14	MCDR3-B-31S6G9-72.0
M83513/09-F14	MCDR3-B-37S6G9-72.0
M83513/09-G14	MCDR3-B-51S6G9-72.0
M83513/09-A15	MCDR3-B- 9S6Q1-72.0
M83513/09-B15	MCDR3-B-15S6Q1-72.0

Military Part No.	MICRODOT Part No.
M83513/09-C15	MCDR3-B-21S6Q1-72.0
M83513/09-D15	MCDR3-B-25S6Q1-72.0
M83513/09-E15	MCDR3-B-31S6Q1-72.0
M83513/09-F15	MCDR3-B-37S6Q1-72.0
M83513/09-G15	MCDR3-B-51S6Q1-72.0
M83513/09-A16	MCDR3-B- 9S6Q9-72.0
M83513/09-B16	MCDR3-B-15S6Q9-72.0

Military Part No.	MICRODOT Part No.
M83513/09-C16	MCDR3-B-21S6Q9-72.0
M83513/09-D16	MCDR3-B-25S6Q9-72.0
M83513/09-E16	MCDR3-B-31S6Q9-72.0
M83513/09-F16	MCDR3-B-37S6Q9-72.0
M83513/09-G16	MCDR3-B-51S6Q9-72.0

MCK (Metal Shell)

Military Part No.	MICRODOT Part No.
M83513/10-A01*N	MCK-**-B- 9PRT1
M83513/10-B01*N	MCK-**-B- 15PRT1
M83513/10-C01*N	MCK-**-B- 21PRT1
M83513/10-D01*N	MCK-**-B- 25PRT1
M83513/10-E01*N	MCK-**-B- 31PRT1
M83513/10-F01*N	MCK-**-B- 37PRT1
M83513/10-A01*P	MCK-**-P- 9PRT1
M83513/10-B01*P	MCK-**-P- 15PRT1
M83513/10-C01*P	MCK-**-P- 21PRT1
M83513/10-D01*P	MCK-**-P- 25PRT1
M83513/10-E01*P	MCK-**-P- 31PRT1
M83513/10-F01*P	MCK-**-P- 37PRT1
M83513/10-A02*N	MCK-**-B- 9PRT1A
M83513/10-B02*N	MCK-**-B- 15PRT1A
M83513/10-C02*N	MCK-**-B- 21PRT1A
M83513/10-D02*N	MCK-**-B- 25PRT1A
M83513/10-E02*N	MCK-**-B- 31PRT1A
M83513/10-F02*N	MCK-**-B- 37PRT1A
M83513/10-A02*P	MCK-**-P- 9PRT1A
M83513/10-B02*P	MCK-**-P- 15PRT1A
M83513/10-C02*P	MCK-**-P- 21PRT1A
M83513/10-D02*P	MCK-**-P- 25PRT1A
M83513/10-E02*P	MCK-**-P- 31PRT1A
M83513/10-F02*P	MCK-**-P- 37PRT1A
M83513/10-A03*N	MCK-**-B- 9PRT1B
M83513/10-B03*N	MCK-**-B- 15PRT1B
M83513/10-C03*N	MCK-**-B- 21PRT1B
M83513/10-D03*N	MCK-**-B- 25PRT1B
M83513/10-E03*N	MCK-**-B- 31PRT1B
M83513/10-F03*N	MCK-**-B- 37PRT1B
M83513/10-A03*P	MCK-**-P- 9PRT1B
M83513/10-B03*P	MCK-**-P- 15PRT1B
M83513/10-C03*P	MCK-**-P- 21PRT1B
M83513/10-D03*P	MCK-**-P- 25PRT1B
M83513/10-E03*P	MCK-**-P- 31PRT1B
M83513/10-F03*P	MCK-**-P- 37PRT1B
M83513/11-G01*N	MCK-**-B- 51PRT1
M83513/11-G01*P	MCK-**-P- 51PRT1
M83513/11-G02*N	MCK-**-B- 51PRT1A
M83513/11-G02*P	MCK-**-P- 51PRT1A
M83513/11-G03*N	MCK-**-B- 51PRT1B
M83513/11-G03*P	MCK-**-P- 51PRT1B
M83513/12-H01*N	MCK-**-B-100PRT1
M83513/12-H01*P	MCK-**-S-100PRT1
M83513/12-H02*N	MCK-**-B-100PRT1A
M83513/12-H02*P	MCK-**-S-100PRT1A
M83513/12-H03*N	MCK-**-B-100PRT1B

Military Part No.	MICRODOT Part No.
M83513/12-H03*P	MCK-**-S-100PRT1B
M83513/13-A01*N	MCK-**-B- 9SRT1
M83513/13-B01*N	MCK-**-B- 15SRT1
M83513/13-C01*N	MCK-**-B- 21SRT1
M83513/13-D01*N	MCK-**-B- 25SRT1
M83513/13-E01*N	MCK-**-B- 31SRT1
M83513/13-F01*N	MCK-**-B- 37SRT1
M83513/13-A01*P	MCK-**-P- 9SRT1
M83513/13-B01*P	MCK-**-P- 15SRT1
M83513/13-C01*P	MCK-**-P- 21SRT1
M83513/13-D01*P	MCK-**-P- 25SRT1
M83513/13-E01*P	MCK-**-P- 31SRT1
M83513/13-F01*P	MCK-**-P- 37SRT1
M83513/13-A02*N	MCK-**-B- 9SRT1A
M83513/13-B02*N	MCK-**-B- 15SRT1A
M83513/13-C02*N	MCK-**-B- 21SRT1A
M83513/13-D02*N	MCK-**-B- 25SRT1A
M83513/13-E02*N	MCK-**-B- 31SRT1A
M83513/13-F02*N	MCK-**-B- 37SRT1A
M83513/13-A02*P	MCK-**-P- 9SRT1A
M83513/13-B02*P	MCK-**-P- 15SRT1A
M83513/13-C02*P	MCK-**-P- 21SRT1A
M83513/13-D02*P	MCK-**-P- 25SRT1A
M83513/13-E02*P	MCK-**-P- 31SRT1A
M83513/13-F02*P	MCK-**-P- 37SRT1A
M83513/13-A03*N	MCK-**-B- 9SRT1B
M83513/13-B03*N	MCK-**-B- 15SRT1B
M83513/13-C03*N	MCK-**-B- 21SRT1B
M83513/13-D03*N	MCK-**-B- 25SRT1B
M83513/13-E03*N	MCK-**-B- 31SRT1B
M83513/13-F03*N	MCK-**-B- 37SRT1B
M83513/13-A03*P	MCK-**-P- 9SRT1B
M83513/13-B03*P	MCK-**-P- 15SRT1B
M83513/13-C03*P	MCK-**-P- 21SRT1B
M83513/13-D03*P	MCK-**-P- 25SRT1B
M83513/13-E03*P	MCK-**-P- 31SRT1B
M83513/13-F03*P	MCK-**-P- 37SRT1B
M83513/14-G01*N	MCK-**-B- 51SRT1
M83513/14-G01*P	MCK-**-P- 51SRT1
M83513/14-G02*N	MCK-**-B- 51SRT1A
M83513/14-G02*P	MCK-**-P- 51SRT1A
M83513/14-G03*N	MCK-**-B- 51SRT1B
M83513/14-G03*P	MCK-**-P- 51SRT1B
M83513/15-H01*N	MCK-**-B-100SRT1
M83513/15-H01*P	MCK-**-S-100SRT1
M83513/15-H02*N	MCK-**-B-100SRT1A
M83515/15-H02*P	MCK-**-S-100SRT1A

Military Part No.	MICRODOT Part No.
M83513/15-H03*N	MCK-**-B-100SRT1B
M83513/15-H03*P	MCK-**-S-100SRT1B
M83513/22-A01*N	MCK-**-B- 9PST1
M83513/22-B01*N	MCK-**-B- 15PST1
M83513/22-C01*N	MCK-**-B- 21PST1
M83513/22-D01*N	MCK-**-B- 25PST1
M83513/22-E01*N	MCK-**-B- 31PST1
M83513/22-F01*N	MCK-**-B- 37PST1
M83513/22-A01*P	MCK-**-P- 9PST1
M83513/22-B01*P	MCK-**-P- 15PST1
M83513/22-C01*P	MCK-**-P- 21PST1
M83513/22-D01*P	MCK-**-P- 25PST1
M83513/22-E01*P	MCK-**-P- 31PST1
M83513/22-F01*P	MCK-**-P- 37PST1
M83513/22-A02*N	MCK-**-B- 9PST1A
M83513/22-B02*N	MCK-**-B- 15PST1A
M83513/22-C02*N	MCK-**-B- 21PST1A
M83513/22-D02*N	MCK-**-B- 25PST1A
M83513/22-E02*N	MCK-**-B- 31PST1A
M83513/22-F02*N	MCK-**-B- 37PST1A
M83513/22-A02*P	MCK-**-P- 9PST1A
M83513/22-B02*P	MCK-**-P- 15PST1A
M83513/22-C02*P	MCK-**-P- 21PST1A
M83513/22-D02*P	MCK-**-P- 25PST1A
M83513/22-E02*P	MCK-**-P- 31PST1A
M83513/22-F02*P	MCK-**-P- 37PST1A
M83513/22-A03*N	MCK-**-B- 9PST1B
M83513/22-B03*N	MCK-**-B- 15PST1B
M83513/22-C03*N	MCK-**-B- 21PST1B
M83513/22-D03*N	MCK-**-B- 25PST1B
M83513/22-E03*N	MCK-**-B- 31PST1B
M83513/22-F03*N	MCK-**-B- 37PST1B
M83513/22-A03*P	MCK-**-P- 9PST1B
M83513/22-B03*P	MCK-**-P- 15PST1B
M83513/22-C03*P	MCK-**-P- 21PST1B
M83513/22-D03*P	MCK-**-P- 25PST1B
M83513/22-E03*P	MCK-**-P- 31PST1B
M83513/22-F03*P	MCK-**-P- 37PST1B
M83513/23-G01*N	MCK-**-B- 51PST1
M83513/23-G01*P	MCK-**-P- 51PST1
M83513/23-G02*N	MCK-**-B- 51PST1A
M83513/23-G02*P	MCK-**-P- 51PST1A
M83513/23-G03*N	MCK-**-B- 51PST1B
M83513/23-G03*P	MCK-**-P- 51PST1B
M83513/24-H01*N	MCK-**-B-100PST1
M83513/24-H01*P	MCK-**-S-100PST1
M83513/24-H02*N	MCK-**-B-100PST1A

Catalog 1308940
Revised 9-14

www.te.com

Dimensions are shown for reference purposes only. Specifications subject to change.

Dimensions are in millimeters unless otherwise specified.

USA: +1 800 522 6752
Asia Pacific: +86 0 400 820 6015
UK: +44 800 267 666

For additional support numbers please visit www.te.com

MIL-DTL-83513 Cross Reference (Continued)

MCK (Metal Shell) (Continued)

Military Part No.	MICRODOT Part No.
M83515/24-H02*P	MCK-**-S-100PST1A
M83513/24-H03*N	MCK-**-B-100PST1B
M83513/24-H03*P	MCK-**-S-100PST1B
M83513/25-A01*N	MCK-**-B- 9SST1
M83513/25-B01*N	MCK-**-B- 15SST1
M83513/25-C01*N	MCK-**-B- 21SST1
M83513/25-D01*N	MCK-**-B- 25SST1
M83513/25-E01*N	MCK-**-B- 31SST1
M83513/25-F01*N	MCK-**-B- 37SST1
M83513/25-A01*P	MCK-**-P- 9SST1
M83513/25-B01*P	MCK-**-P- 15SST1
M83513/25-C01*P	MCK-**-P- 21SST1
M83513/25-D01*P	MCK-**-P- 25SST1
M83513/25-E01*P	MCK-**-P- 31SST1
M83513/25-F01*P	MCK-**-P- 37SST1
M83513/25-A02*N	MCK-**-B- 9SST1A
M83513/25-B02*N	MCK-**-B- 15SST1A

Military Part No.	MICRODOT Part No.
M83513/25-C02*N	MCK-**-B- 21SST1A
M83513/25-D02*N	MCK-**-B- 25SST1A
M83513/25-E02*N	MCK-**-B- 31SST1A
M83513/25-F02*N	MCK-**-B- 37SST1A
M83513/25-A02*P	MCK-**-P- 9SST1A
M83513/25-B02*P	MCK-**-P- 15SST1A
M83513/25-C02*P	MCK-**-P- 21SST1A
M83513/25-D02*P	MCK-**-P- 25SST1A
M83513/25-E02*P	MCK-**-P- 31SST1A
M83513/25-F02*P	MCK-**-P- 37SST1A
M83513/25-A03*N	MCK-**-B- 9SST1B
M83513/25-B03*N	MCK-**-B- 15SST1B
M83513/25-C03*N	MCK-**-B- 21SST1B
M83513/25-D03*N	MCK-**-B- 25SST1B
M83513/25-E03*N	MCK-**-B- 31SST1B
M83513/25-F03*N	MCK-**-B- 37SST1B
M83513/25-A03*P	MCK-**-P- 9SST1B

Military Part No.	MICRODOT Part No.
M83513/25-B03*P	MCK-**-P- 15SST1B
M83513/25-C03*P	MCK-**-P- 21SST1B
M83513/25-D03*P	MCK-**-P- 25SST1B
M83513/25-E03*P	MCK-**-P- 31SST1B
M83513/25-F03*P	MCK-**-P- 37SST1B
M83513/26-G01*N	MCK-**-B- 51SST1
M83513/26-G01*P	MCK-**-P- 51SST1
M83513/26-G02*N	MCK-**-B- 51SST1A
M83513/26-G02*P	MCK-**-P- 51SST1A
M83513/26-G03*N	MCK-**-B- 51SST1B
M83513/26-G03*P	MCK-**-P- 51SST1B
M83513/27-H01*N	MCK-**-B-100SST1
M83513/27-H01*P	MCK-**-S-100SST1
M83513/27-H02*N	MCK-**-B-100SST1A
M83515/27-H02*P	MCK-**-S-100SST1A
M83513/27-H03*N	MCK-**-B-100SST1B
M83513/27-H03*P	MCK-**-S-100SST1B

*C = Cadmium or N = Nickel (space applications only)
**C2 = Cadmium or N1 = Nickel (space applications only)

Catalog 1308940
Revised 9-14

www.te.com

Dimensions are shown for reference purposes only. Specifications subject to change.

Dimensions are in millimeters unless otherwise specified.

USA: +1 800 522 6752
Asia Pacific: +86 0 400 820 6015
UK: +44 800 267 666

For additional support numbers please visit www.te.com

MICRODOT Rectangular Connectors Introduction

Product Facts

- **Designed for both military and commercial applications**
- **Well-suited for external conditions**
- **Precise contact alignment with extremely low engaging forces**
- **Product offering consists of metal shell, plastic shell, panel mount, printed circuit board and strip connectors**
- **Metal shell connector promotes high durability and reliability**

Twist Pin contact High Density Microminiature Connectors described in this catalog comprise a complete contact system which is adaptable to a numerous variety of form factors. Precise contact alignment, with extremely low engaging forces, results from the manner in which the Twist Pin contact system is packaged — by constructing the male contact as a breathing helical spring, electrical contact is achieved at many points around the periphery of the pin bundle.

Featured in this catalog is the twist pin contact line, which accommodates round wire and Flat Conductor Cable (FCC), Edgeboard Connectors.

Applications requiring frequent mating and disconnect call for the metal shell connector version. This style connector promotes high durability and reliability.

Designed for both military and aerospace applications, this latest innovation is especially well-suited to use in external conditions.

This catalog also features light-weight plastic connectors in a strip (MCS) format as well as JACKMATE Connectors (MCJ Series) format for small package application requiring high reliability.

Edgeboard applications are covered in this catalog with a special High Density Standard Module (HDSM) Connector as well as MIL-DTL-55302 (MCEM) Connectors. The high mating forces of these larger connectors are greatly reduced with the use of the low force twist pins and sockets which are standard for this product line.

Catalog 1308940
Revised 9-14

www.te.com

Dimensions are shown for reference purposes only. Specifications subject to change.

Dimensions are in millimeters unless otherwise specified.

USA: +1 800 522 6752
Asia Pacific: +86 0 400 820 6015
UK: +44 800 267 666

For additional support numbers please visit www.te.com

MICRODOT Twist Pin Contact Data

Twist Pin — 24 gauge Pin and Socket Contacts

The contact spring member normally found in socket contacts has been eliminated by creating a breathing helical spring principle on the pin contact — smaller, more durable contacts can be manufactured economically.

Wire range 24-36 AWG solid & stranded.

Stamped and Formed

24 gauge Pin and Socket contact

The Stamped and Formed Pin contact utilizes a 4 beam design that will achieve 8 points of contact. The crimped version of the Stamped and Formed contact will accept a 24AWG-36AWG stranded wire. The Solder pot version of the Stamped and Formed contact is a one piece design that eliminates the need for a solder pot adapter.

Catalog 1308940
Revised 9-14

www.te.com

Dimensions are shown for reference purposes only. Specifications subject to change.

Dimensions are in millimeters unless otherwise specified.

USA: +1 800 522 6752
Asia Pacific: +86 0 400 820 6015
UK: +44 800 267 666

For additional support numbers please visit www.te.com

MICRODOT MCE Series Plastic Shell Edgeboard Connectors

Plastic Shell Edge Board Connectors

Designed for commercial applications requiring frequent disconnect and connect, including data recorders and computers. Mother board connector can be ordered to fit any pattern on your circuit board.

This new connector features the proven twist pin contact with precision contact alignment with extremely low engaging forces.

Units are available with contacts as few as 40 and as many as 110. Wire sizes 28 through 24, any type of plating or color coding, any kind of wire termination including wire wrap — a high degree of flexibility for your military or commercial application.

Two hexagonal polarizing keys can provide up to 36 different key combinations are supplied.

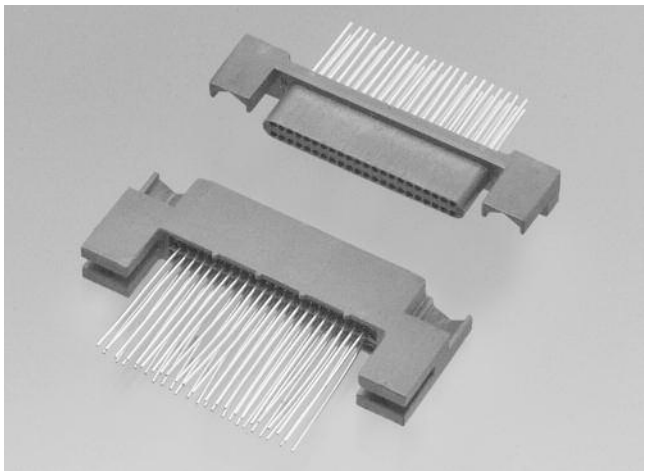

40 Contacts

Technical & Performance Data — Twist Pin Plastic Shell Connectors

Electrical

Contact Resistance — The average mated contact resistance is 4 milliohms, with a maximum value of 8 milliohms, using standard 24 AWG solid copper leads when measured directly behind the crimp joints of the mated pin and socket contacts. The average resistance value at 100 microvolts is 4.8 milliohms.

Dielectric Withstanding Voltage — 800 VAC RMS at sea level (600 for solder pots); 200 VAC RMS at 70,000 feet [21,336m] (150 for solder pots).

Corrosion Resistance (Per MIL-STD-202C, Method 101B, Condition B) — Both mated and unmated samples do not exceed the maximum allowable contact resistance (8 milliohms) when subjected to the 48 hour salt spray test.

Durability — The contact resistance after 500 mating cycles is less than the maximum allowable, 8 milliohms.

Insulation Resistance — Greater than 5,000 megohms at room temperature.

Maximum Current Carrying Capacity — No. 24 contact 3 amperes. It must be recognized however, that all the wires to a connector will not carry their maximum current under all environmental conditions due to wire temperature.

Mechanical

Contact Engaging & Separation Forces — 8.0 oz. max. [2.24N] (eng.), 0.5 oz. min.[.14N] (sep.)

Environmental

Temperature Range (Operating) — -67°F to 257°F [-55° C to +125°C].

Vibration (Per MIL-STD-202C, Method 204A, Condition D) — No discontinuity in excess of 1 µ sec. during twelve 20 minute sweeps from 10 to 2000 CPS at .06 double amplitude or 20 G forces, whichever is less.

Materials

Insulator — Liquid Crystal Polymer (LCP) per ASTM D5138 or Polyphenylene Sulfide per MIL-M-24519 or ASTM D4067.

Contacts —
Pin contact — Copper alloy and beryllium copper alloy make up the complete construction.
Socket contact — Copper alloy.

Hardware — Corrosion resistant stainless steel.

Finishes

Insulator — None.

Contacts — Standard finish is 0.000050 [0.00127] gold over copper flash per MIL-G-45204, Type II.

Hardware — Passivated per QQ-P-35.

Catalog 1308940
Revised 9-14

www.te.com

Dimensions are shown for reference purposes only. Specifications subject to change.

Dimensions are in millimeters unless otherwise specified.

USA: +1 800 522 6752
Asia Pacific: +86 0 400 820 6015
UK: +44 800 267 666

For additional support numbers please visit www.te.com

MICRODOT MCE Series Plastic Shell Edgeboard Connectors (Continued)

Mother Board (Pin Side)

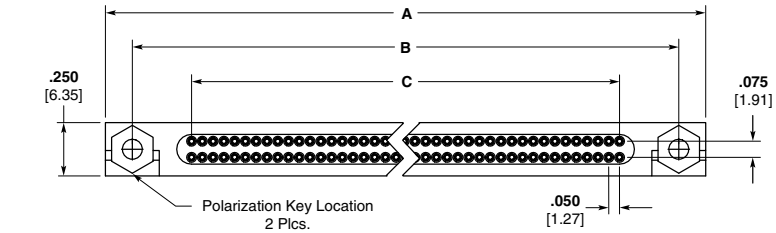

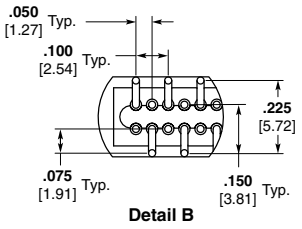

Detail B

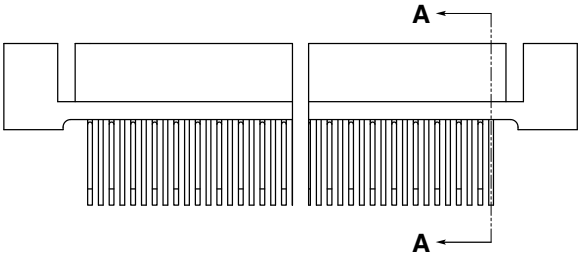

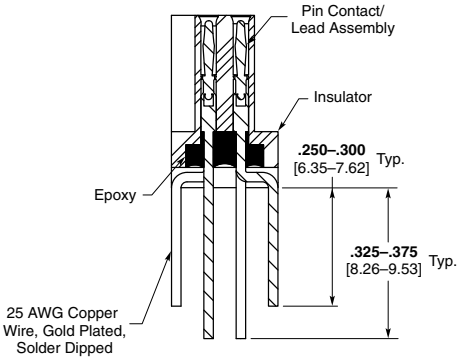

Section A-A

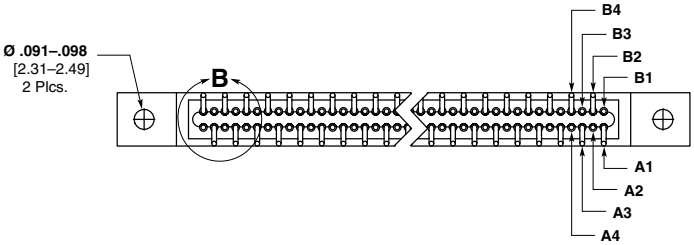

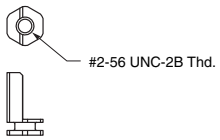

Hex Polarizing Key
2 Supplied (Loose Packed)

Daughter Board (Socket Side)

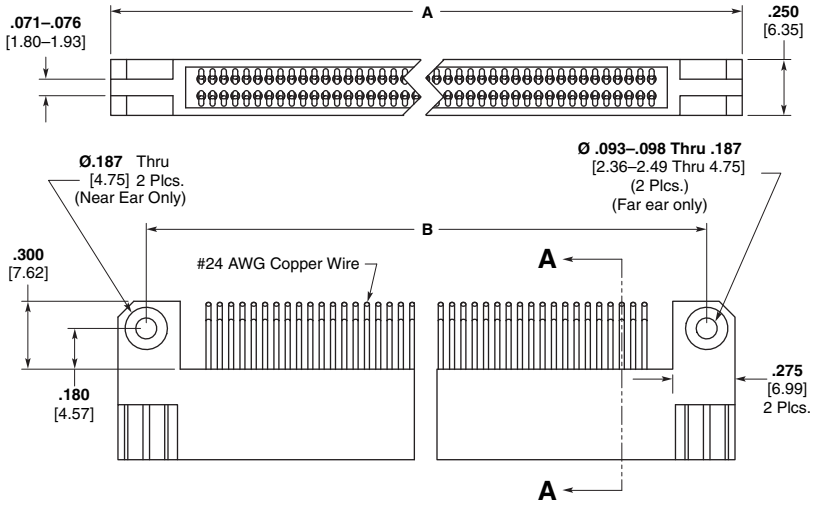

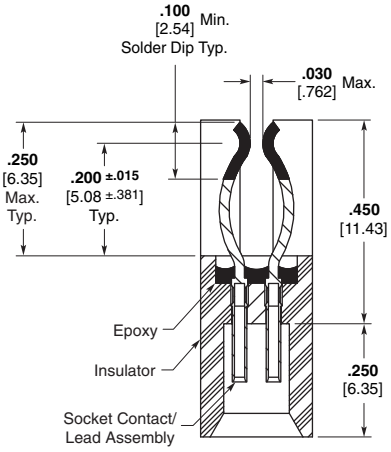

Section A-A

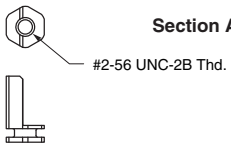

Hex Polarizing Key
2 Supplied (Loose Packed)

Catalog 1308940
Revised 9-14

www.te.com

Dimensions are shown for reference purposes only. Specifications subject to change.

Dimensions are in millimeters unless otherwise specified.

USA: +1 800 522 6752
Asia Pacific: +86 0 400 820 6015
UK: +44 800 267 666

For additional support numbers please visit www.te.com

MICRODOT MCE Series Plastic Shell Edgeboard Connectors (Continued)

Dimensions for .062 [1.57] PC Board

No. of Contacts	A ± .010 [± .254]	B ± .005 [± .127]	C Basic
40	**1.750** 44.45	**1.500** 38.10	**.950** 24.13
44	**1.850** 46.99	**1.600** 40.64	**1.050** 26.67
80	**2.750** 69.85	**2.500** 63.50	**1.950** 49.53
110	**3.500** 88.90	**3.250** 82.55	**2.700** 68.58

Notes: For PC Boards of different widths, consult TE Connectivity.

How To Specify

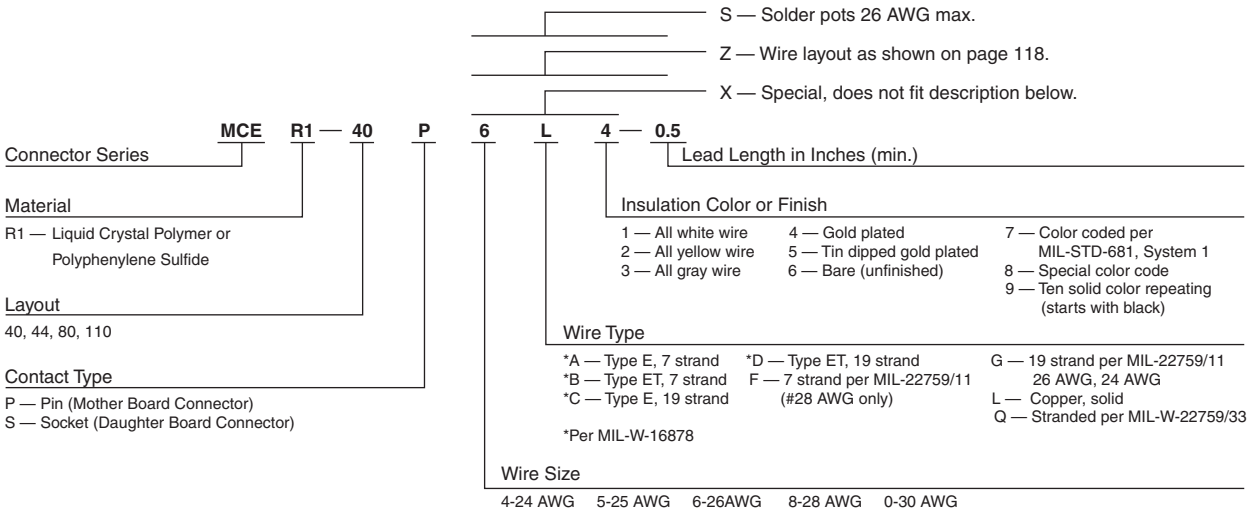

Mounting — Holes on the Daughter Board side can be modified.

Dimensions are shown for reference purposes only. Specifications subject to change.

Dimensions are in millimeters unless otherwise specified.

USA: +1 800 522 6752
Asia Pacific: +86 0 400 820 6015
UK: +44 800 267 666

For additional support numbers please visit www.te.com

MICRODOT MCEM Series Metal Shell Edgeboard Connectors

Metal Shell Edge Board Connectors

- **Meets MIL-DTL-55302 performance requirements**
- **Layouts 128 and 184 are QPL to slash sheets 120, 121, 122 and 123**
- **Connectors are available in 40, 44, 80, 110, 128, 152, and 184 positions**
- **Utilizes low force twist pins and our low force sockets. Mating forces in the 3 to 4 oz. [.83 to 1.11N] range per contact are typical with low force pin and low force socket**
- **Designed for surface mounting and through-the-board mounting**
- **Available termination**
  - **Mother board (pin side) — cactus bend**
  - **Daughter board (socket side) — coke bottle, right-angle bend to "A" or "B" side**
  - **Solder pots, and variety of other wire terminations for pin and socket connectors available at customer's request**
- **Two hexagonal polarizing keys (per MIL-DTL-55302 slash sheet 124) are provided. Jackscrew hardware is available. For programmable keying/ jacking modifications consult TE Connectivity**

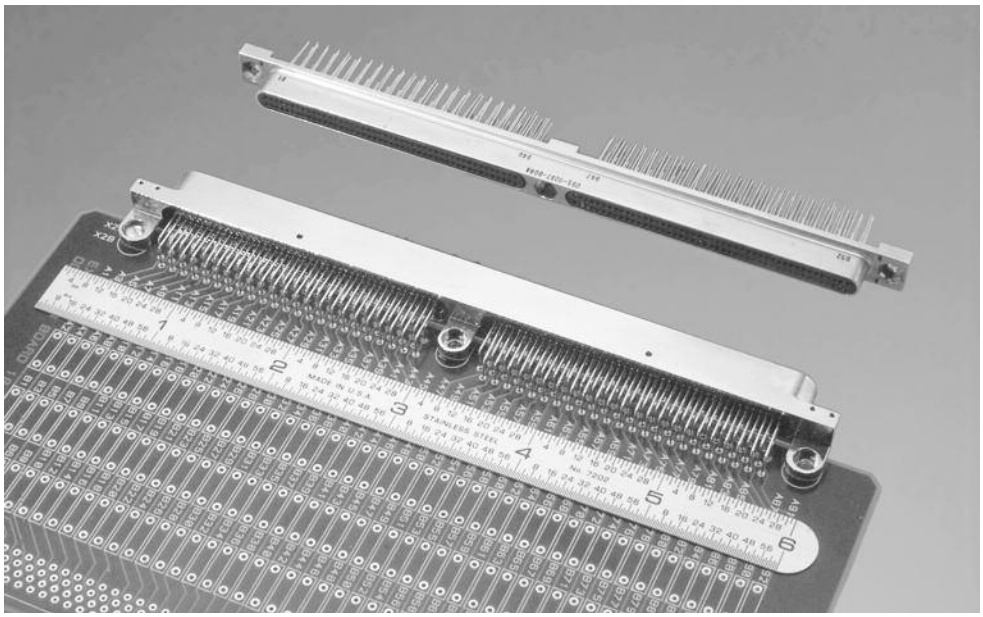

In addition to the plastic versions of the 2 piece edgeboard connectors, a metal shell assembly is designed and tooled. The metal shells are made of aluminum alloy. The insert material is Diallyl phthalate, Polyphenylene sulfide (RYTON), or Liquid Crystal Polymer (LCP). The technical and performance data is essentially the same as that shown for the MCDM Series on page 5-72. These are rugged, durable connectors and are ideal for use in areas of high density packaging and where frequent connect and disconnects are required. Designed initially for applications in airborne data recorders, computers and associated equipment in navigational systems. The mother board connector can be ordered to fit any pattern on the circuit board. The units can also be provided with contacts on .100 [2.54] spacing which results in .100 [2.54] grid pattern.

Performance Data

Electrical

Contact Resistance — The average mated contact resistance is 4 milliohms, with a maximum value of 8 milliohms. The average resistance value at 100 microvolts is 4.8 milliohms.

Dielectric Withstanding Voltage — 800 VAC RMS at sea level (600 for solder pots); 200 VAC RMS at 70,000 feet [21,336m] (150 for solder pots).

Durability — Less than the maximum allowable, 8 milliohms after 500 mating cycles.

Insulation Resistance — Greater than 5,000 megohms at room ambient temperature.

Maximum Current Carrying Capacity — No. 24 contact 3 amperes.

Mechanical

Contact Engaging & Separation Forces — 5.0 oz. max. [1.39N] (eng.), 0.5 oz. min. [.14N] (sep.).

Environmental

Temperature Range — -67°F to 302°F [-55° C to +150°C] for Diallyl Phthalate; -67°F to 257°F [-55° C to +125°C] for Polyphenylene Sulfide.

Vibration — No discontinuity in excess of 1 µ sec. during twelve 20 minute sweeps from 10 to 2000 CPS at .06 double amplitude or 20 G forces, whichever is less.

Materials and Finish

Shells — High grade aluminum alloy, electroless nickel plated per AMS 2404.

Insulator — Diallyl Phthalate per MIL-M-14, Type SDG-F (for 128 & 184); Polyphenylene Sulfide per MIL-M-24519 or ASTM D4067 (for 40, 44, 80, 110 & 152), or Liquid Crystal Polymer per ASTM D5138.

Contacts —
Pin (low force) — beryllium and OFHC copper, gold plated.
Socket (low force) — Copper alloy, gold plated.

Hardware — Corrosion resistant stainless steel, passivated.

RYTON is a trademark of Chevron Chemical Company LLC.

Catalog 1308940
Revised 9-14

www.te.com

Dimensions are shown for reference purposes only. Specifications subject to change.

Dimensions are in millimeters unless otherwise specified.

USA: +1 800 522 6752
Asia Pacific: +86 0 400 820 6015
UK: +44 800 267 666

For additional support numbers please visit www.te.com

MICRODOT MCEM Series Metal Shell Edgeboard Connectors (Continued)

Mother Board (Pin Side)

40, 44, 80, 110, *128* & 152 Positions

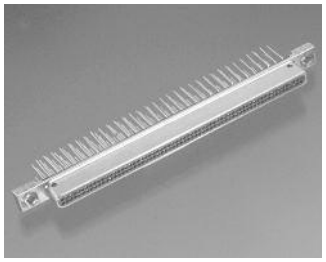

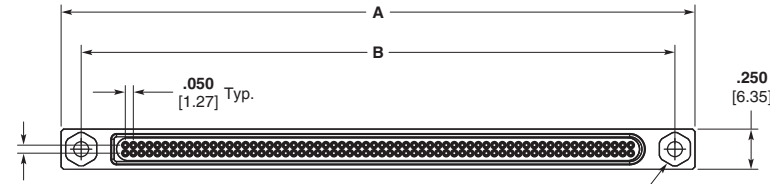

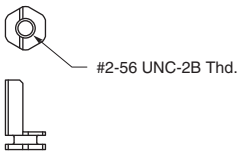

Hex Polarizing Key
2 Supplied (Loose Packed)

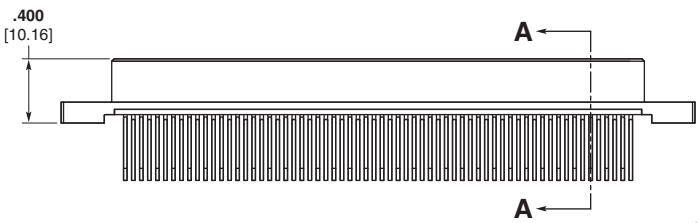

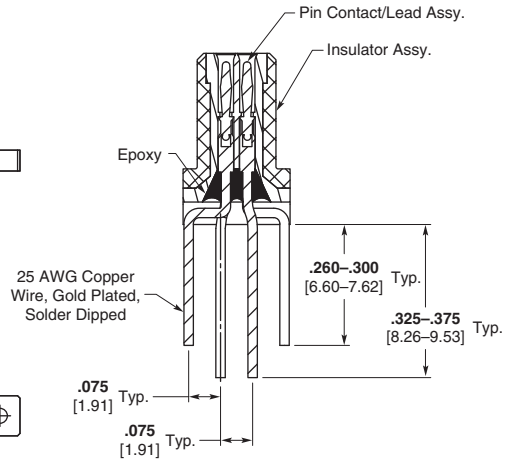

Section A-A

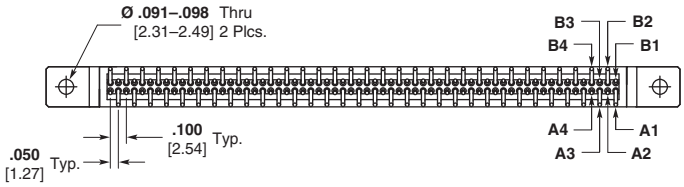

Dimensions for .062 [1.57] PC Board

No. of Contacts	A ± .010 [± .254]	B ± .005 [± .127]
40	**1.750** 44.45	**1.500** 38.10
44	**1.850** 46.99	**1.600** 40.64
80	**2.750** 69.85	**2.500** 63.50
110	**3.500** 88.90	**3.250** 82.55
128	**3.950** 100.33	**3.700** 93.98
152	**4.550** 115.57	**4.330** 109.98

Note: For PC Boards of different widths, consult TE Connectivity.

Items in bold italic are qualified to MIL-DTL-55302.
Configuration shown is per MIL-DTL-55302/120.

Dimensions are shown for reference purposes only. Specifications subject to change.

Dimensions are in millimeters unless otherwise specified.

USA: +1 800 522 6752
Asia Pacific: +86 0 400 820 6015
UK: +44 800 267 666

For additional support numbers please visit www.te.com

MICRODOT MCEM Series Metal Shell Edgeboard Connectors (Continued)

Daughter Board (Socket Side)

40, 44, 80, 110, *128* & 152 Positions

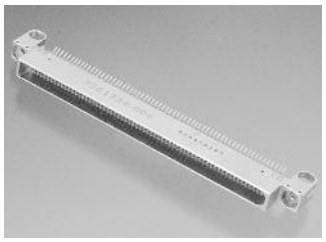

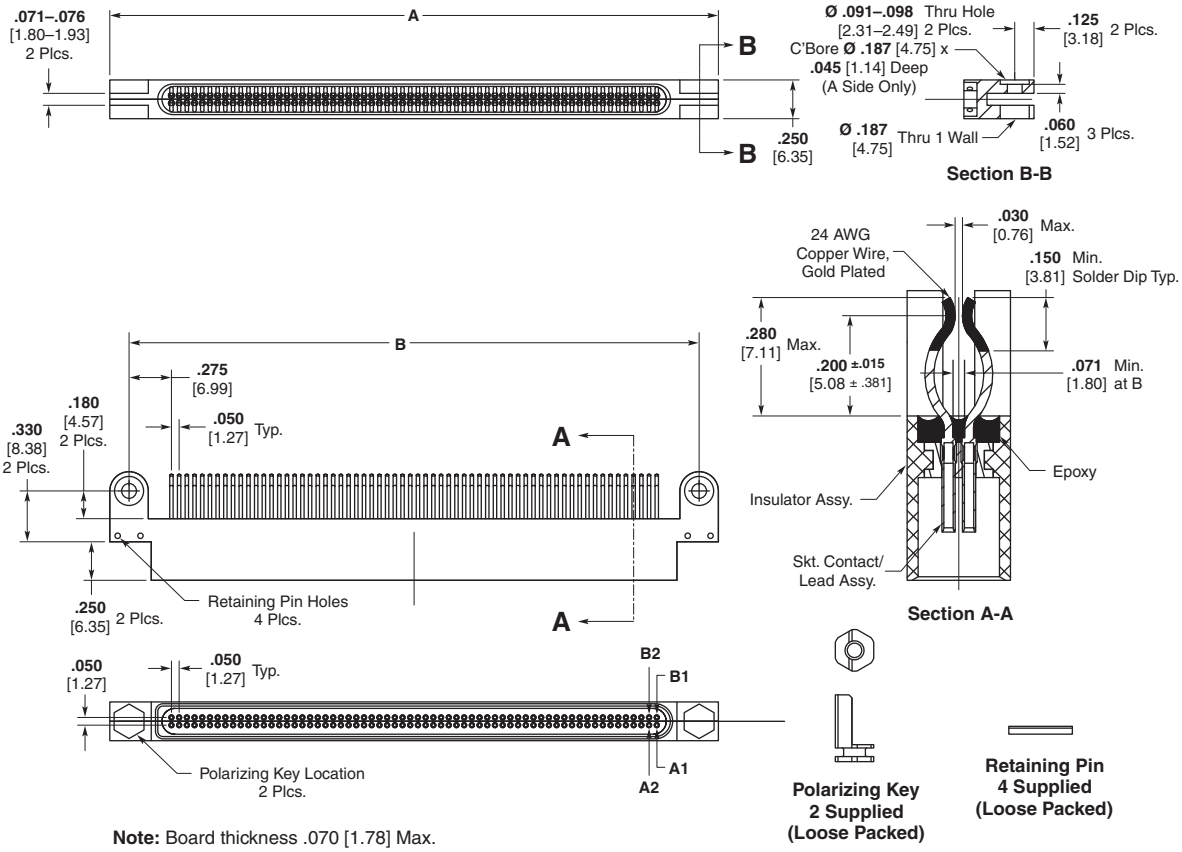

Note: Board thickness .070 [1.78] Max.

How To Specify

S — Solder pots for 26 AWG max.
Z — Wire layout as illustrated.
X — Special, does not fit description below.

MCE M1 — 128 L 6 L 4 — 0.5

Connector Series

Material
M1 — Metal Shell (40, 44, 80, 110, ***128***, 152, ***184***)
SM1 — Metal Shell (152)

Layout
40, 44, 80, 110, ***128***, 152, ***184***

Contact Type
L — Low Force Pin (Mother Board Connector)
SL — Low Force Socket* (Daughter Board Connector)

Lead Length in Inches (min.)

Insulation Color or Finish
1 — All white wire
2 — All yellow wire
3 — All gray wire
4 — Gold plated
5 — Tin dipped gold plated
6 — Bare (unfinished)
7 — Color coded per MIL-STD-681, System 1
8 — Special color code
9 — Ten solid color repeating (starts with black)

Wire Type
*A — Type E, 7 strand
*B — Type ET, 7 strand
*C — Type E, 19 strand
*D — Type ET, 19 strand
F — 7 strand per MIL-C-22759/11 (#28 AWG only)
G — 19 strand per MIL-C-22759/11 26 AWG, 24 AWG
L — Copper, solid
Q — Stranded per MIL-W-22759/33

*Per MIL-W-16878

Wire Size
4–24 AWG ***5–25 AWG*** 6–26 AWG 8–28 AWG 0–30 AWG

Items in bold italic are qualified to MIL-DTL-55302.
Configuration shown is per MIL-DTL-55302/121.

Polarization – Hexagonal hardware is supplied with connector.
Mounting — Standard mounting holes are shown. Consult TE Connectivity for modifications.

Catalog 1308940
Revised 9-14
www.te.com

Dimensions are shown for reference purposes only. Specifications subject to change.

Dimensions are in millimeters unless otherwise specified.

USA: +1 800 522 6752
Asia Pacific: +86 0 400 820 6015
UK: +44 800 267 666

For additional support numbers please visit www.te.com

MICRODOT MCEM Series Metal Shell Edgeboard Connectors (Continued)

Mother Board (Pin Side)
***184* Positions**

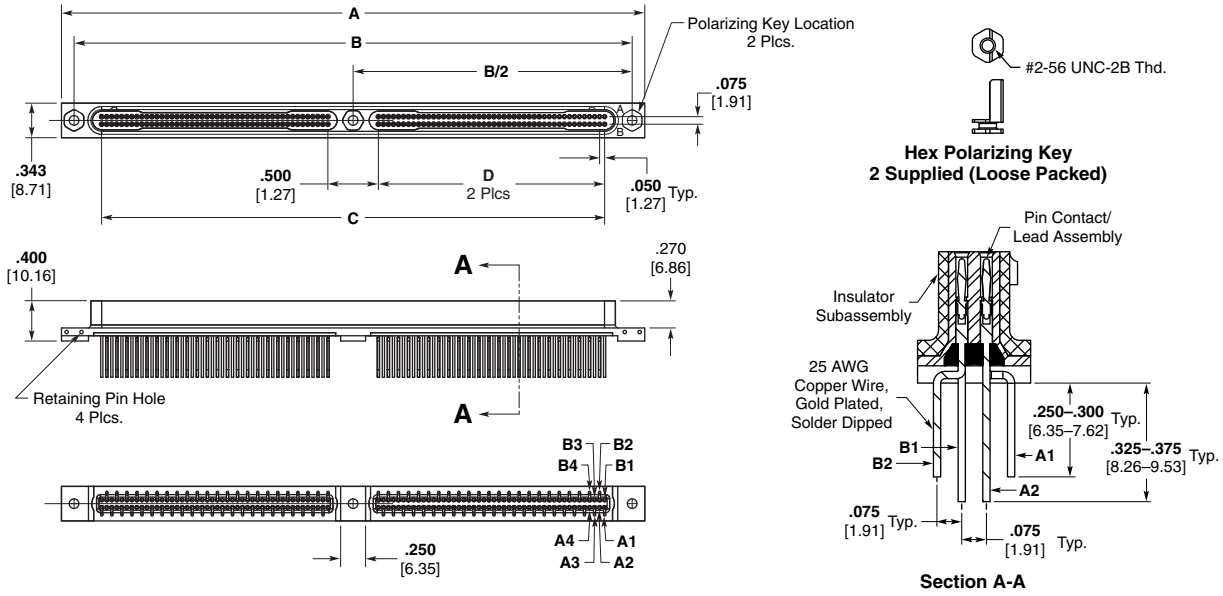

Daughter Board (Socket Side)
***184* Positions**

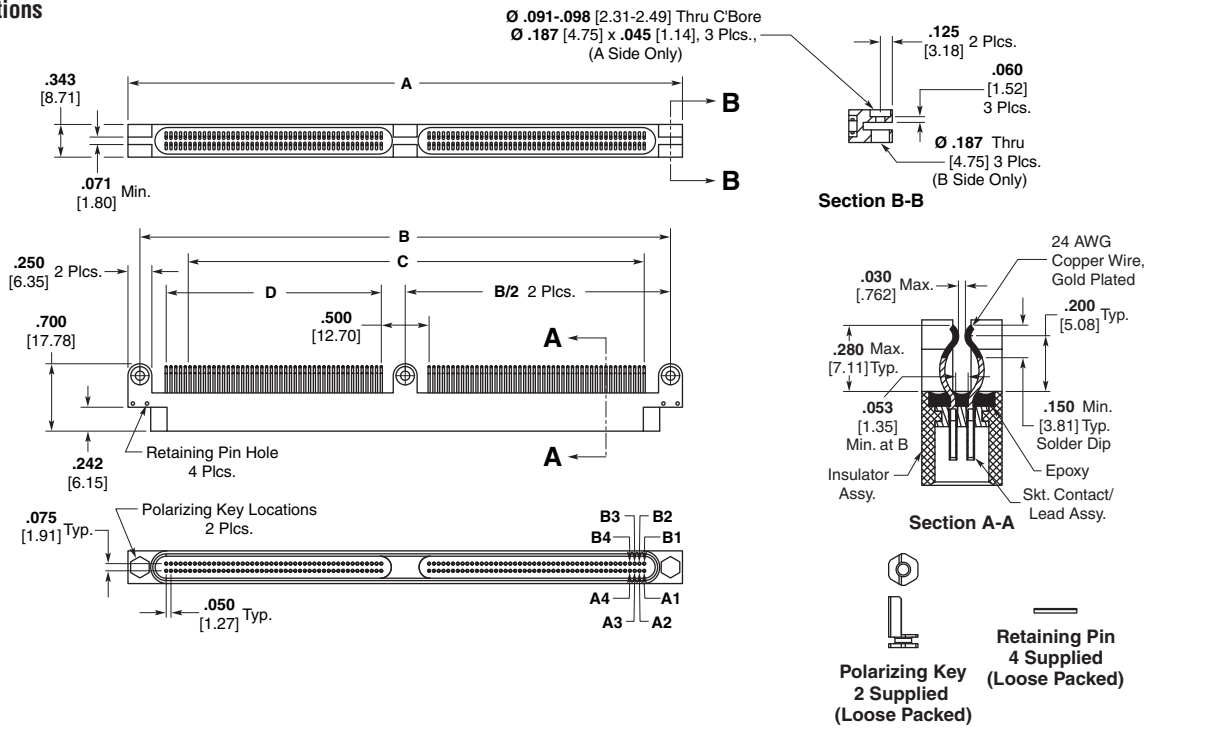

No. of Contacts	A ± .010 [± .254]	B ± .005 [± .127]	C Basic	D Basic
184	**5.800** 147.32	**5.550** 140.97	**5.000** 127.00	**2.250** 57.15

Dimensions are shown for reference purposes only. Specifications subject to change.

Dimensions are in millimeters unless otherwise specified.

USA: +1 800 522 6752
Asia Pacific: +86 0 400 820 6015
UK: +44 800 267 666

For additional support numbers please visit www.te.com

MICRODOT JACKMATE MCJ(M) Series Plastic (Metal) Shell Center Jackscrew Connectors

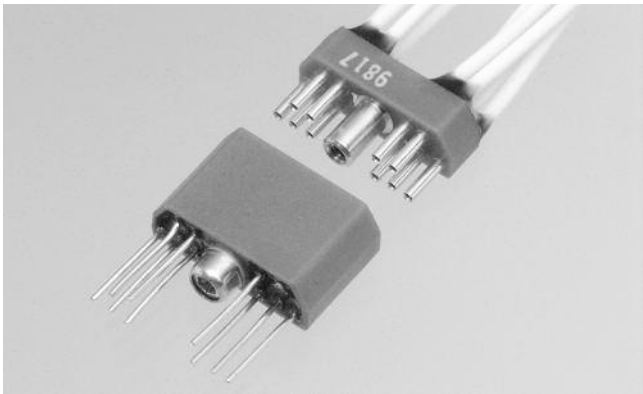

JACKMATE Connectors are the first Twist Pin contact assemblies designed to accommodate center jackscrews that provide jacking action when mating or unmating the connectors. Although the units were initially developed for high density cord-to-cord or in-line applications, either plug or receptacle can be adapted to a PC board. The jacking hardware consists of a threaded bushing and a captivated jackscrew which are made of corrosion resistant stainless steel and are molded into the JACKMATE Connector Insulator.

The twist pin contacts are on .050 [1.27] center-to-center linear spacing and contact terminations are available in solid wire or stranded wire. There is a high degree of flexibility with this JACKMATE connector design for commercial or military applications.

Available om MCJ(M) Series Plastic (Metal) Shells.

MICRODOT JACKMATE MCJ Series Plastic Shell Center Jackscrew Connectors

JACKMATE Technical & Performance Data for Plastic Shell

Electrical

Contact Resistance — The average mated contact resistance is 4 milliohms, with a maximum value of 8 milliohms, using standard 24 AWG solid copper leads when measured directly behind the crimp joints of the mated pin and socket contacts. The average resistance value at 100 microvolts is 4.8 milliohms.

Dielectric Withstanding Voltage (60 Hz rms room temperature) —
Solder Pots — 600 VAC at sea level; 150 VAC at 70,000 feet [21,336m]
Wire Terminations — 750 VAC at sea level; 200 VAC at 70,000 feet [21,336m].

Corrosion Resistance (Per MIL-STD-202C, Method 101B, Condition B) — Both mated and unmated samples do not exceed the maximum allowable contact resistance (8 milliohms) when subjected to the 48 hour salt spray test.

Durability — The contact resistance after 500 mating cycles is less than the maximum allowable, 8 milliohms.

Insulation Resistance — Greater than 5,000 megohms at room temperature for the materials listed under "Materials".

Maximum Current Carrying Capacity — No. 24 contact 3 amperes. It must be recognized, however, that all the wires to a connector will not carry their maximum current under all environmental conditions due to wire temperature.

Mechanical

Contact Engaging & Separation Forces — 8.0 oz. max. [2.22N] (eng.), 0.5 oz. min. [.14N] (sep.).

Environmental

Temperature Range (Operating) — -67°F to 257°F [-55° C to 125°C].

Vibration (Per MIL-STD-202C, Method 204-A, Condition D) — No discontinuity in excess of 1 µ sec. during twelve 20 minute sweeps from 10 to 2000 CPS at .06 double amplitude or 20 G forces, whichever is less.

Materials

Insulator — Glass filled Nylon Type 6.

Contacts —
Pin contact — copper alloy and beryllium copper alloy make up the complete construction
Socket contact — copper alloy.

Hardware — Corrosive resistant stainless steel.

Finishes

Contacts — Standard finish is 0.000050 [0.00127] gold over copper flash per MIL-G-45204, Type II.

Hardware — Passivated Per QQ-P-35.

10 & 14 Contact Layout

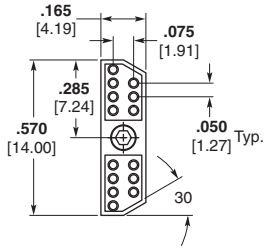

14 Layout

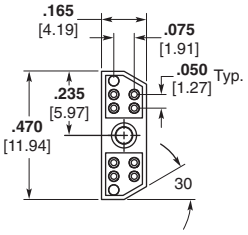

10 Layout

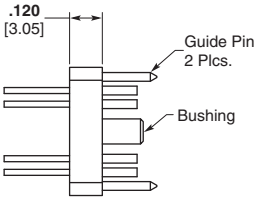

Receptacle

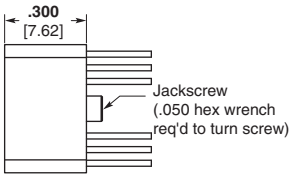

Plug

Catalog 1308940
Revised 9-14

www.te.com

Dimensions are shown for reference purposes only. Specifications subject to change.

Dimensions are in millimeters unless otherwise specified.

USA: +1 800 522 6752
Asia Pacific: +86 0 400 820 6015
UK: +44 800 267 666

For additional support numbers please visit www.te.com

MICRODOT JACKMATE MCJ Series Plastic Shell Center Jackscrew Connectors (Continued)

26, 38 & 46 Contact Layout

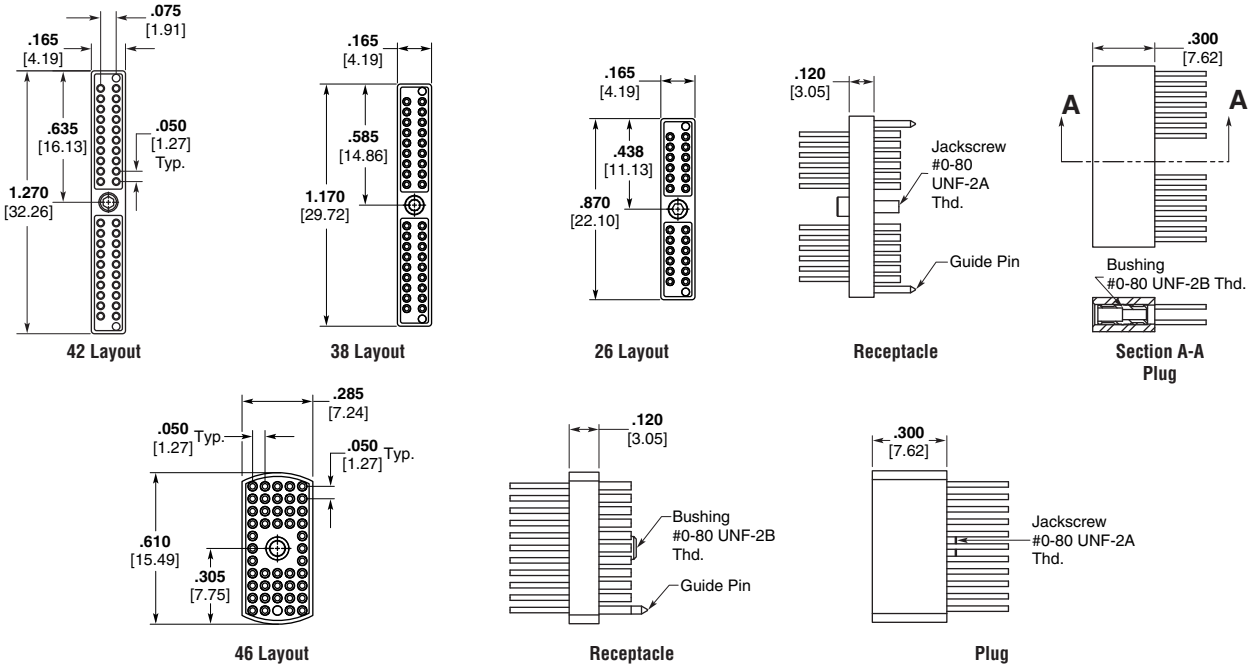

How To Specify

MCJ B2 — 10 P 4 L 4 — 0.5

- Connector Series: MCJ
- Shell Material: B2
  - B2 Glass filled nylon, type 6/10, blue
- Layout (Positions): 10
  - 10, 14, 26, 38, 42, 46
- Contact Type: P
  - P Pin
  - S Socket
- Wire Size: 4
  - 4—24 AWG 5—25 AWG 6—26 AWG 8—28 AWG 0—30 AWG
- Wire Type: L
  - *A Type E, 7 strand
  - *B Type ET, 7 strand
  - *C Type E, 19 strand
  - *D Type ET, 19 strand
  - F 7 strand per MIL-C-22759/11 (#28 AWG only)
  - G 19 strand per MIL-C-22759/11 26 AWG, 24 AWG
  - L Copper, solid
  - Q Stranded per MIL-W-22759/33
  - *Per MIL-W-16878
- Insulation Color or Finish: 4
  - 1 All white wire
  - 2 All yellow wire
  - 3 All gray wire
  - 4 Gold plated
  - 5 Tin dipped gold plated
  - 6 Bare (unfinished)
  - 7 Color coded per MIL-STD-681, System 1
  - 8 Special color code
  - 9 Ten solid color repeating (starts with black)
- Lead Length in Inches (min.): 0.5
- X Special, does not fit description below.
- S Solder pot for 26 AWG maximum stranded wire.

Contact Arrangement as Viewed from the Engaging Face of the Pin Side

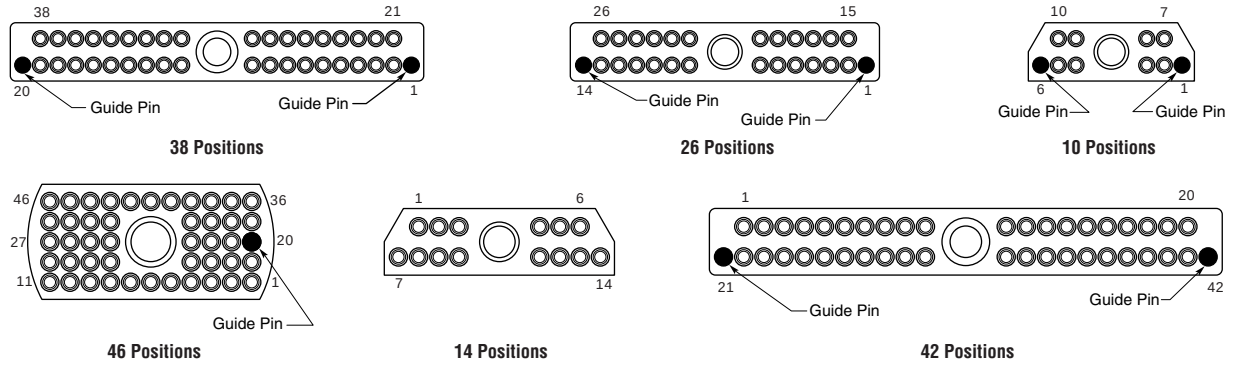

Guide pin locations illustrated are for standards configuration only. Any location is available.
Guide pins are supplied in socket connectors and blank cavities are in pin connector.

Catalog 1308940
Revised 9-14

www.te.com

Dimensions are shown for reference purposes only. Specifications subject to change.

Dimensions are in millimeters unless otherwise specified.

USA: +1 800 522 6752
Asia Pacific: +86 0 400 820 6015
UK: +44 800 267 666

For additional support numbers please visit www.te.com

MICRODOT JACKMATE MCJM Series Metal Shell Center Jackscrew Connectors

Technical and Performance Data for Metal Shell

Electrical

Contact Resistance — The average mated contact resistance is 4 milliohms, with a maximum value of 8 milliohms, using standard 24 AWG solid copper leads when measured directly behind the crimp joints of the mated pin and socket contacts. The average resistance value at 100 microvolts is 4.8 milliohms.

Dielectric Withstanding Voltage (60 Hz rms room temperature) — **Solder Pots** — 600 VAC at sea level; 150 VAC at 70,000 feet [21,336m]. **Wire Terminations** — 750 VAC at sea level; 200 VAC at 70,000 feet [21,336m].

Corrosion Resistance (Per MIL-STD-202C, Method 101B, Condition B) — Both mated and unmated samples do not exceed the maximum allowable contact resistance (8 milliohms) when subjected to the 48 hour salt spray test.

Durability — The contact resistance after 500 mating cycles is less than the maximum allowable, 8 milliohms.

Insulation Resistance — Greater than 5,000 megohms at room temperature for the materials listed under "Materials".

Maximum Current Carrying Capacity — No. 24 contact 3 amperes. It must be recognized, however, that all the wires to a connector will not carry their maximum current under all environmental conditions due to wire temperature.

Mechanical

Contact Engaging & Separation Forces — 8.0 oz. max. [2.22N] (eng.), 0.5 oz. min.[.14N] (sep.).

Environmental

Temperature Range (Operating) — -67°F to 302°F [-55°C to 150°C] for Diallyl Phthalate.

Vibration (Per MIL-STD-202C, Method 204-A, Condition D) — No discontinuity in excess of 1 µ sec. during twelve 20 minute sweeps from 10 to 2000 CPS at .06 double amplitude or 20 G forces, whichever is less.

Materials

Insulator — Diallyl Phthalate per MIL-M-14, Type SDG-F.

Contacts —
Pin contact — copper alloy and beryllium copper alloy make up the complete construction;
Socket contact — copper alloy.

Body Shells —
Pin body shell — stainless steel, Types 304, Condition A per QQ-S-766;
Socket body shell — aluminum alloy per QQ-A-591, A-380 alloy.

Hardware — Corrosion resistant stainless steel.

Finishes

Contacts — Standard finish is 0.000050 [0.00127] gold over copper flash per MIL-G-45204, Type II.

Body Shells —
Pin body shell — passivated per MIL-F-14072 (E-300);
Socket body shell — electroless nickel per AMS 204, Class 3, except thickness is 0.001/0.0015 [0.025/0.038].

Hardware — Passivated per QQ–P–35.

Note: Insulators are molded into their metal shells — No bonded joint is used. Standard material used unless otherwise specified.

Plug (Pin Side)

Shell Type M1

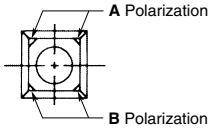

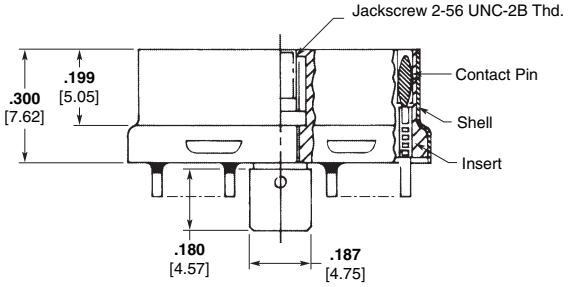

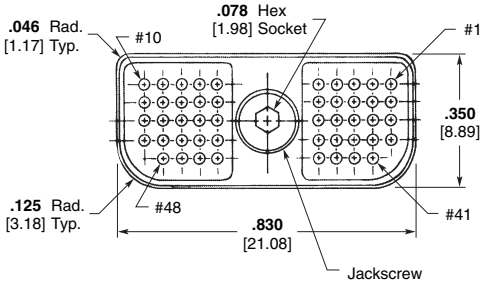

Catalog 1308940
Revised 9-14

www.te.com

Dimensions are shown for reference purposes only. Specifications subject to change.

Dimensions are in millimeters unless otherwise specified.

USA: +1 800 522 6752
Asia Pacific: +86 0 400 820 6015
UK: +44 800 267 666

For additional support numbers please visit www.te.com

MICRODOT JACKMATE MCJM Series Metal Shell Center Jackscrew Connectors (Continued)

Receptacle (Socket Side)

Shell Type M1

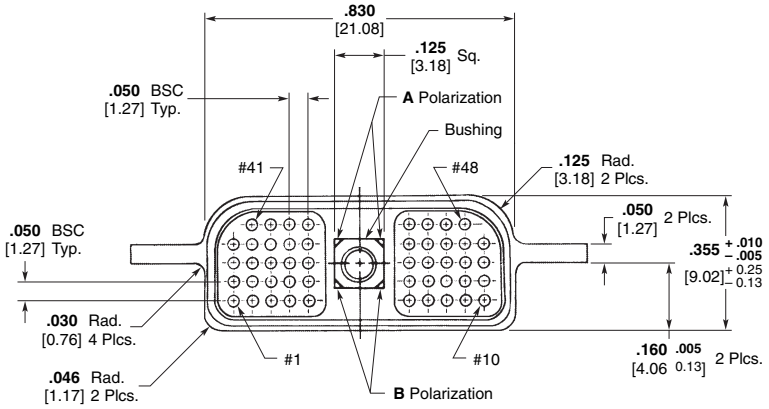

Shell Type M2

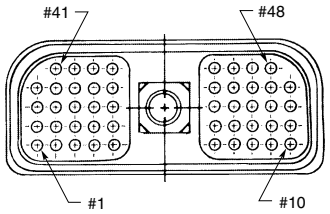

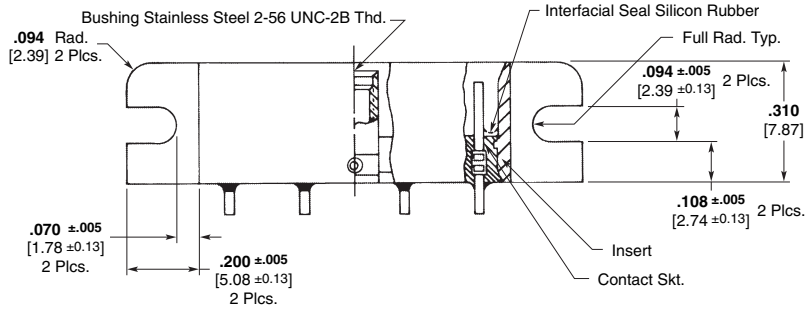

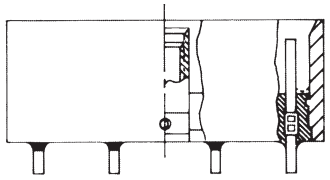

How To Specify

MCJ M1 A — 48 P 4 L 4 — 0.5

JACKMATE Connector Series

Shell Material
- M1 Metal Shell (Standard)
- M2 Metal Shell (Special receptacles only)

Polarizing Position
- A, B

Layout (Positions)
- 48

Contact Type
- P Pin
- S Socket

Wire Size
- 4—24 AWG 5—25 AWG 6—26 AWG 8—28 AWG 0—30 AWG

Wire Type
- *A Type E, 7 strand
- *B Type ET, 7 strand
- *C Type E, 19 strand
- *D Type ET, 19 strand
- F 7 strand per MIL-C-22759/11 (#28 AWG only)
- G 19 strand per MIL-C-22759/11 26 AWG, 24 AWG
- L Copper, solid
- Q Stranded per MIL-W-22759/33

*Per MIL-W-16878

Insulation Color or Finish
- 1 All white wire
- 2 All yellow wire
- 3 All gray wire
- 4 Gold plated
- 5 Tin dipped gold plated
- 6 Bare (unfinished)
- 7 Color coded per MIL-STD-681, System 1
- 8 Special color code
- 9 Ten solid color repeating (starts with black)

Lead Length in Inches (min.)

- S Solder pot for 26 AWG maximum stranded wire.
- X Special, does not fit description below.

Catalog 1308940
Revised 9-14

www.te.com

Dimensions are shown for reference purposes only. Specifications subject to change.

Dimensions are in millimeters unless otherwise specified.

USA: +1 800 522 6752
Asia Pacific: +86 0 400 820 6015
UK: +44 800 267 666

For additional support numbers please visit www.te.com

MICRODOT MCS Series Strip Connectors

Strip Connectors

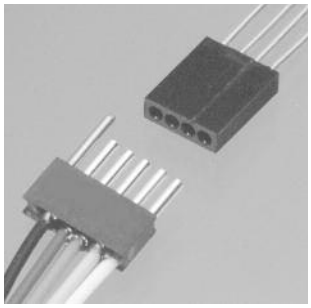

MCS Plastic Strip

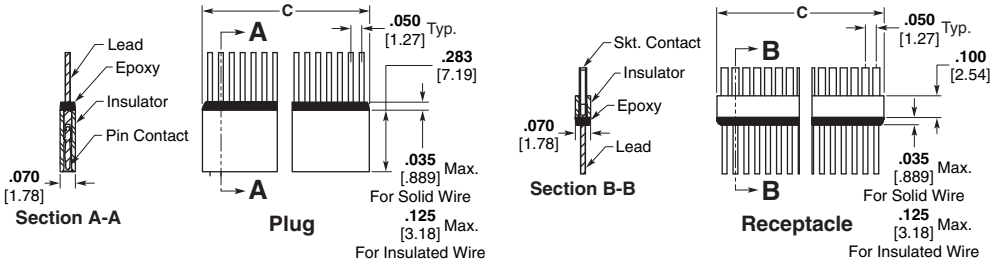

Part No. By Size	C Max.
MCSAR*-1**	**.070** [1.78]
MCSAR*-2**	**.120** [3.05]
MCSAR*-3**	**.170** [4.32]
MCSAR*-4**	**.220** [5.59]
MCSAR*-5**	**.270** [6.86]
MCSAR*-6**	**.320** [8.13]
MCSAR*-7**	**.420** [10.67]
MCSAR*-8**	**.420** [10.67]
MCSAR*-9**	**.470** [11.94]
MCSAR*-10**	**.520** [13.21]
MCSAR*-11**	**.570** [14.48]
MCSAR*-12**	**.620** [15.75]
MCSAR*-13**	**.670** [17.02]
MCSAR*-14**	**.720** [18.29]
MCSAR*-15**	**.770** [19.56]
MCSAR*-16**	**.820** [20.83]
MCSAR*-17**	**.870** [22.10]
MCSAR*-18**	**.920** [23.37]
MCSAR*-19**	**.970** [24.64]
MCSAR*-20**	**1.020** [25.91]
MCSAR*-21**	**1.070** [27.18]
MCSAR*-22**	**1.120** [28.45]
MCSAR*-23**	**1.170** [29.72]
MCSAR*-24**	**1.220** [30.99]
MCSAR*-25**	**1.270** [32.26]
MCSAR*-26**	**1.320** [33.53]
MCSAR*-27**	**1.370** [34.80]
MCSAR*-28**	**1.420** [36.07]
MCSAR*-29**	**1.470** [37.34]
MCSAR*-30**	**1.520** [38.61]

Part No. By Size	C Max.
MCSAR*-31**	**1.570** [39.88]
MCSAR*-32**	**1.620** [41.15]
MCSAR*-33**	**1.670** [42.42]
MCSAR*-34**	**1.720** [43.69]
MCSAR*-35**	**1.770** [44.96]
MCSAR*-36**	**1.820** [46.23]
MCSAR*-37**	**1.870** [47.50]
MCSAR*-38**	**1.920** [48.77]
MCSAR*-39**	**1.970** [50.04]
MCSAR*-40**	**2.020** [51.31]
MCSAR*-41**	**2.070** [52.58]
MCSAR*-42**	**2.120** [53.85]
MCSAR*-43**	**2.170** [55.12]
MCSAR*-44**	**2.220** [56.39]
MCSAR*-45**	**2.270** [57.66]
MCSAR*-46**	**2.320** [58.93]
MCSAR*-47**	**2.370** [60.20]
MCSAR*-48**	**2.420** [61.47]
MCSAR*-49**	**2.470** [62.74]
MCSAR*-50**	**2.520** [64.01]
MCSAR*-51**	**2.570** [65.28]
MCSAR*-52**	**2.620** [66.55]
MCSAR*-53**	**2.670** [67.82]
MCSAR*-54**	**2.720** [69.09]
MCSAR*-55**	**2.770** [70.36]
MCSAR*-56**	**2.820** [71.63]
MCSAR*-57**	**2.870** [72.90]
MCSAR*-58**	**2.920** [74.17]
MCSAR*-59**	**2.970** [75.44]
MCSAR*-60**	**3.020** [76.71]

Part No. By Size	C Max.
MCSAR*-61**	**3.070** [77.98]
MCSAR*-62**	**3.120** [79.25]
MCSAR*-63**	**3.170** [80.52]
MCSAR*-64**	**3.220** [81.79]
MCSAR*-65**	**3.270** [83.06]
MCSAR*-66**	**3.320** [84.33]
MCSAR*-67**	**3.370** [85.60]
MCSAR*-68**	**3.420** [86.87]
MCSAR*-69**	**3.470** [88.14]
MCSAR*-70**	**3.520** [89.41]
MCSAR*-71**	**3.570** [90.68]
MCSAR*-72**	**3.620** [91.95]
MCSAR*-73**	**3.670** [93.22]
MCSAR*-74**	**3.720** [94.49]
MCSAR*-75**	**3.770** [95.76]
MCSAR*-76**	**3.820** [97.03]
MCSAR*-77**	**3.870** [98.30]
MCSAR*-78**	**3.920** [99.57]
MCSAR*-79**	**3.970** [100.84]
MCSAR*-80**	**4.020** [102.11]
MCSAR*-81**	**4.070** [103.38]
MCSAR*-82**	**4.120** [104.65]
MCSAR*-83**	**4.170** [105.92]
MCSAR*-84**	**4.220** [107.19]
MCSAR*-85**	**4.270** [108.46]
MCSAR*-86**	**4.320** [109.73]
MCSAR*-87**	**4.370** [111.00]
MCSAR*-88**	**4.420** [112.27]
MCSAR*-89**	**4.470** [113.54]
MCSAR*-90**	**4.520** [114.81]

Part No. By Size	C Max.
MCSAR*-91**	**4.570** [116.08]
MCSAR*-92**	**4.620** [117.35]
MCSAR*-93**	**4.670** [118.62]
MCSAR*-94**	**4.720** [119.89]
MCSAR*-95**	**4.770** [121.16]
MCSAR*-96*	**4.820** [122.43]
MCSAR*-97**	**4.870** [123.70]
MCSAR*-98**	**4.920** [124.97]
MCSAR*-99**	**4.970** [126.24]
MCSAR*-100**	**5.020** [127.51]
MCSAR*-101**	**5.070** [128.78]
MCSAR*-102**	**5.120** [130.05]
MCSAR*-103**	**5.170** [131.32]
MCSAR*-104**	**5.220** [132.59]
MCSAR*-105**	**5.270** [133.86]
MCSAR*-106**	**5.320** [135.13]
MCSAR*-107**	**5.370** [136.40]
MCSAR*-108**	**5.420** [137.67]
MCSAR*-109**	**5.470** [138.94]
MCSAR*-110**	**5.520** [140.21]
MCSAR*-111**	**5.570** [141.48]
MCSAR*-112**	**5.620** [142.75]
MCSAR*-113**	**5.670** [144.02]
MCSAR*-114**	**5.720** [145.29]
MCSAR*-115**	**5.770** [146.56]
MCSAR*-116**	**5.820** [147.83]
MCSAR*-117**	**5.870** [149.10]
MCSAR*-118**	**5.920** [150.37]
MCSAR*-119**	**5.970** [151.64]
MCSAR*-120**	**6.020** [152.91]

How To Specify

S — Solder pot for 26 AWG maximum stranded wire.

X — Special, does not fit description below.

MCS AR 2 — 26 P 6 A 1 — 18.0

Connector Series

Insulator Type and Material

AR — Polyphenylene Sulfide per MIL-M-24519, or ASTM D4067, or Liquid Crystal Polymer per ASTM D5138

Contact Locations

1 — Contact in every cavity
2 — Contact in every other cavity 1, 3, 5...
3 — Contact in every cavity except guide pin cavity in each end cavity
4 — Contact in every other cavity 2, 4, 6... and guide pin in each end cavity
X — Other than above
Standard Polarization
Guide pins are in socket connectors.
Blank cavities are in pin connectors.

Number of Cavities (120 Max.)

Contact Type

P — Pin S — Socket

Wire Size

4–24 AWG 5–25 AWG 6–26 AWG 8–28 AWG 0–30 AWG

Wire Type

*A — Type E, 7 strand
*B — Type ET, 7 strand
*C — Type E, 19 strand
*D — Type ET, 19 strand
F — 7 strand per MIL-22759/11 (#28 AWG only)
G — 19 strand per MIL-22759/11 26 AWG, 24 AWG
M — Copper, solid
Q — Stranded per MIL-W-22759/33

*Per MIL-W-16878

Insulation Color or Finish

1 — All white wire
2 — All yellow wire
3 — All gray wire
4 — Gold plated
5 — Tinned
6 — Bare (unfinished)
7 — Color coded per MIL-STD-681, System 1
8 — Special color code
9 — Ten solid color repeating (starts with black)

Lead Length in Inches (min.)

Catalog 1308940
Revised 9-14

www.te.com

Dimensions are shown for reference purposes only. Specifications subject to change.

Dimensions are in millimeters unless otherwise specified.

USA: +1 800 522 6752
Asia Pacific: +86 0 400 820 6015
UK: +44 800 267 666

For additional support numbers please visit www.te.com

MICRODOT High Density Standard Module (HDSM) Connectors

Features

- **Designed for surface mounting on both daughter board and mother board for increased circuit density**
- **Basic design offers 38, 78, 120, 152, 200, 304, and 400 contact designs**
- **High reliability twist pin and socket per MIL-DTL-83513 and MIL-DTL-55302**
- **Connector permits lateral movement of daughter board to accommodate clamping of the heatsink**
- **Plated through-hole mounting available**
- **Available with flying leads**
- **Extender card option available**
- **Typical mating force for 304 contacts is 38 pounds**
- **Designed to withstand vapor phase soldering**
- **Two rotatable (six position) polarizing keys are provided accommodating 36 possible combinations**
- **Jackscrew hardware available; consult TE Connectivity**
- **Different modular inserts may be specified to include coax (Pixi/Con), fiber optic or other special contacts**
- **Inserts may be partially or fully loaded and installed in the connector shell in various configurations**

Note: HDSM Connectors may require additional hardware for Rack and Panel Mount Systems

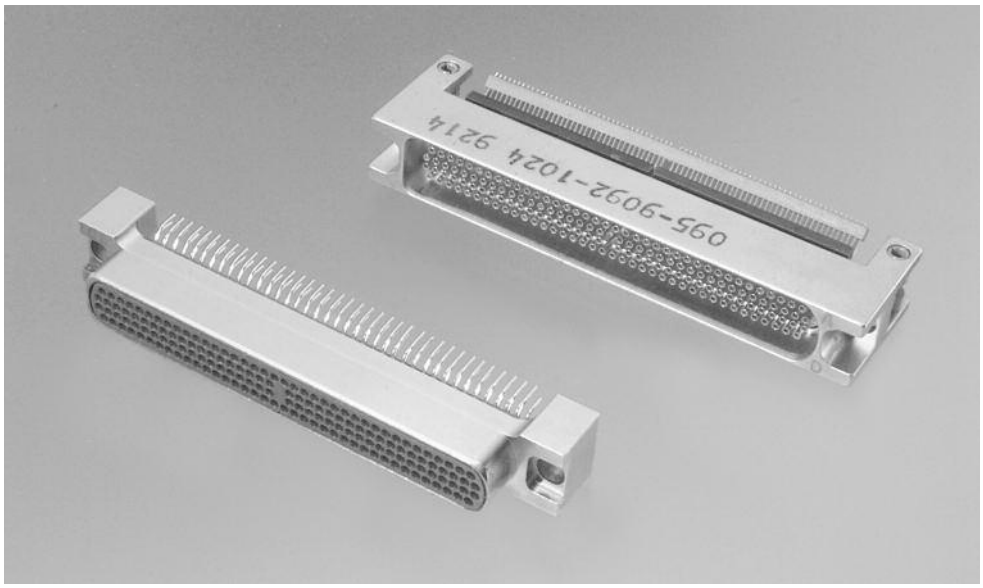

The MICRODOT HDSM connector is designed for 4 row .050 [1.27] pitch density with a special low force twist pin that meets all requirements of MIL-DTL-55302 and MIL-DTL-83513. This high density connector allows the use of construction to double the packaging density with surface mount capability.

Performance Data Summary

Electrical

Contacts — Pin 24 AWG twist pin, Socket #24 AWG, Wire range 24 AWG to 32 AWG solid and stranded.

Contact Resistance (voltage drop) — 25 millivolts max. at 3 amps, 25° ± 3° C.

Current Rating — 3 amps max. per contact

Dielectric Withstanding Voltage — Test in accordance with EIA-364-20, Method a, Test Condition IV. Volts RMS 60Hz at room ambient: 600V for Solder Pots at Sea Level. 150V for Solder Pots at 70,000 ft. [21,336m]. 500V for Wire Terminations at Sea Level. 200V for Wire Terminations at 70,000 ft.

Insulation Resistance — 5,000 megohms min. at room ambient.

Magnetic Permeability — 2 mμ max.

Mechanical

Contact Spacing — .050 [1.27] centers

Contact Engagement & Separation — 5.0 oz max. [1.39N] (eng.) 0.5 oz. min. [.14N] 3.5 oz. typ. [.97N] (sep.) force.

Materials and Finishes

Contacts — Copper alloy plated with .000050 [0.00127] gold over copper flash per MIL-G-45204, Type II.

Metal Shell —

Insulator — Liquid Crystal Polymer (LCP) per ASTM D5138 or Polyphenylene Sulfide per MIL-M-24519 or ASTM D4067

Body Shell — Aluminum alloy plated Nickel, electroless per MIL-C-26074.

Environmental

Temperature Range — -67°F to 257°F [-55° C to +125° C].

Vibration — No discontinuity in excess of 1 μ second when tested in accordance with EIA-364-28, test condition III.

Insulator Retention — Inserts will withstand a 50 lb. per square inch load in either direction.

Shock — No discontinuity in excess of 1 μ second when tested in accordance with EIA-364-27, test condition A.

Durability — No mechanical or electrical defects detrimental to the function of the connectors after 500 cycles of mating and unmating. (Caution: Mating force increases during durability cycling may be noted).

Humidity — After exposure to humidity as specified by EIA-364-31, Method IV, Test Condition B, IR shall be 1 megohm minimum following step 7a of EIA-364-31 section 4.3.6.1 and 1000 megohms minumum after 24 hours of conditioning per EIA-364-31.

Salt Spray — Connectors shall meet the performance requirements of contact resistance, mating and unmating forces, and contact retention after being subjected to the 48 hour 5% solution salt spray test per EIA-364-26, Condition B.

Crimp Termination Tensile Strength — Unassembled contacts with crimped stranded wire terminations will not pull out of contacts when the following axial loads are applied: 24 AWG, 5 lbs., 26 AWG, 4 lbs., 28 AWG, 3 lbs.

Catalog 1308940
Revised 9-14

www.te.com

Dimensions are shown for reference purposes only. Specifications subject to change.

Dimensions are in millimeters unless otherwise specified.

USA: +1 800 522 6752
Asia Pacific: +86 0 400 820 6015
UK: +44 800 267 666

For additional support numbers please visit www.te.com

MICRODOT High Density Standard Module (HDSM) Connectors (Continued)

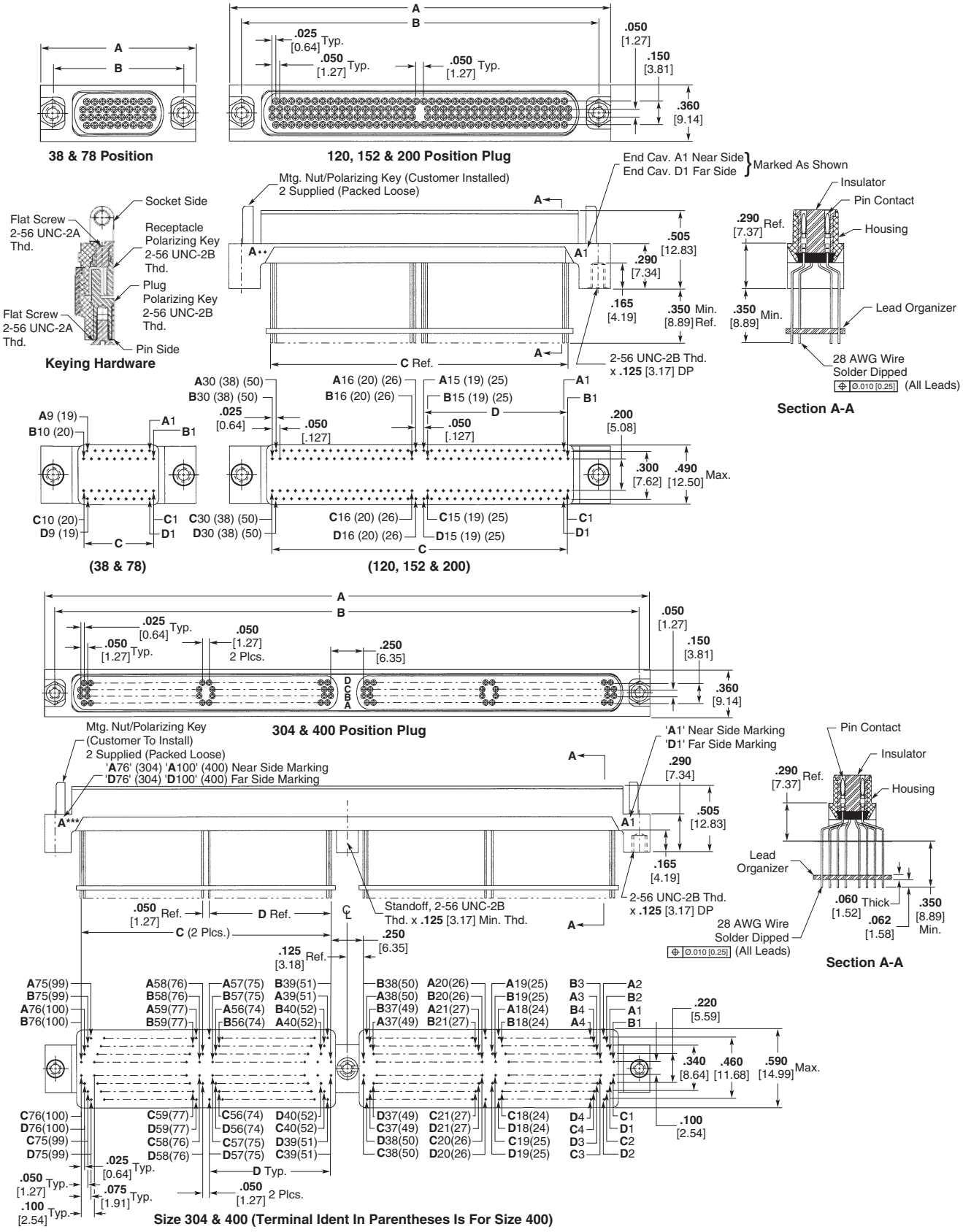

Catalog 1308940
Revised 9-14

www.te.com

Dimensions are shown for reference purposes only. Specifications subject to change.

Dimensions are in millimeters unless otherwise specified.

USA: +1 800 522 6752
Asia Pacific: +86 0 400 820 6015
UK: +44 800 267 666

For additional support numbers please visit www.te.com

MICRODOT High Density Standard Module (HDSM) Connectors (Continued)

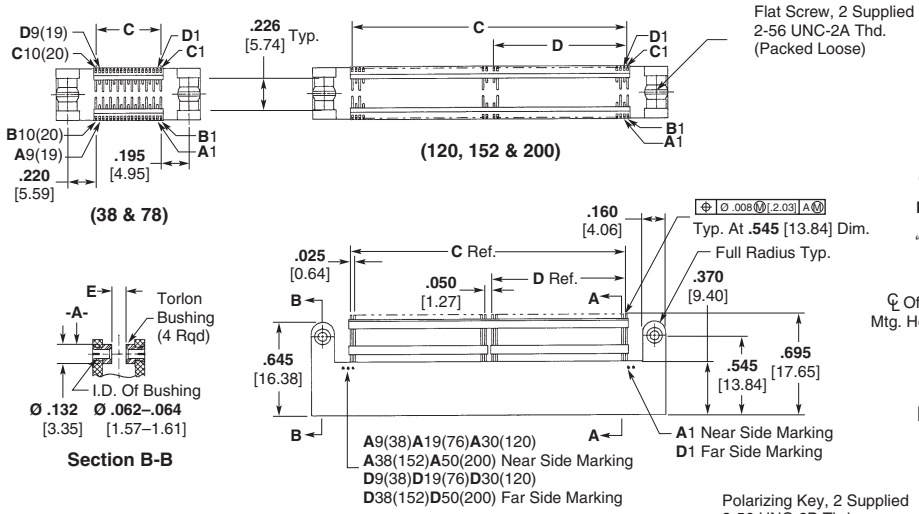

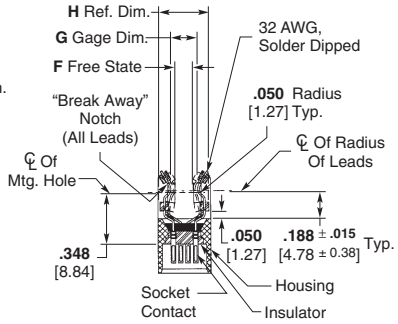

Section A-A

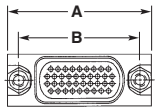

38 & 78 Position Receptacle

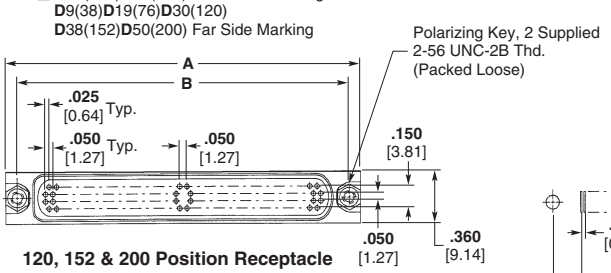

120, 152 & 200 Position Receptacle

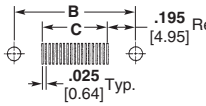

Size 38 & 78

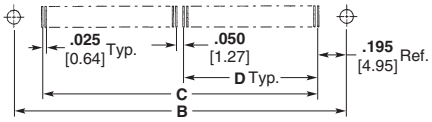

Size 120, 152 & 200
Recommended PCB Footprint Pattern

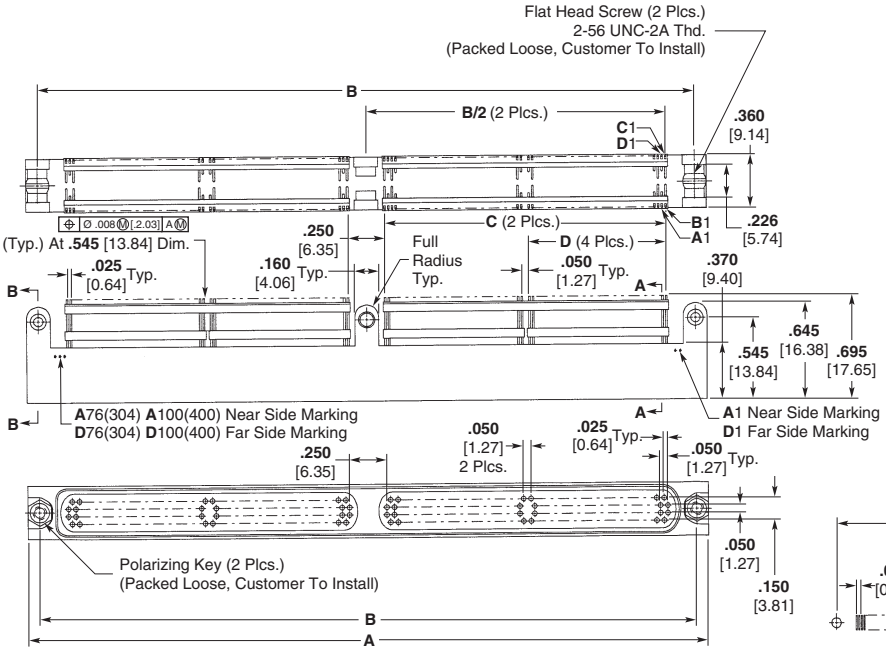

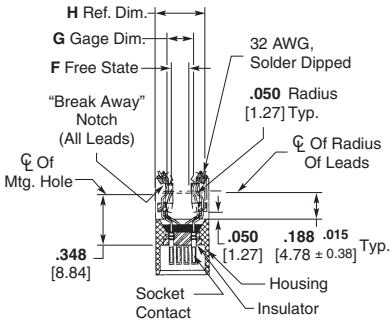

Section A-A

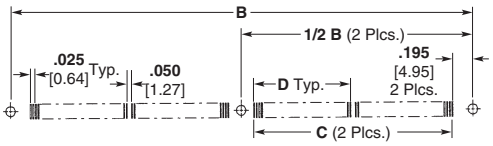

Size 304 & 400
Recommended PCB Footprint Pattern

Catalog 1308940
Revised 9-14

www.te.com

Dimensions are shown for reference purposes only. Specifications subject to change.

Dimensions are in millimeters unless otherwise specified.

USA: +1 800 522 6752
Asia Pacific: +86 0 400 820 6015
UK: +44 800 267 666

For additional support numbers please visit www.te.com

MICRODOT High Density Standard Module (HDSM) Connectors (Continued)

No. of Cavities	A Dim.	B Dim.	C Dim.	D Dim.
Single Bay				
38	**1.000** 25.40	**.840** 21.34	**.450** 11.43	—
78	**1.500** 38.10	**1.340** 34.04	**.950** 24.13	—
120	**2.050** 52.07	**1.890** 48.01	**1.500** 38.10	**.725** 18.42
152	**2.450** 62.23	**2.290** 58.17	**1.900** 48.26	**.925** 23.50
200	**3.050** 77.47	**2.890** 73.41	**2.500** 63.50	**1.225** 31.12
Double Bay				
304	**4.600** 116.84	**4.440** 112.78	**1.900** 48.26	**.925** 23.50
400	**5.800** 147.32	**5.640** 143.26	**2.500** 63.50	**1.225** 31.12

How To Specify

HDSM 1 — 152 L 4 L 4 — 0.5

Connector Series

Contact Location
1 — Full complement of contacts
2 — Contacts in outside row only
3 — Contacts in inside row only
4 — Other than above or special housing

Layout
38, 78, 120, 152, 200, 304 & 400

Contact Type
L — Low Force Pin
SL — Low Force Socket

Wire Size
4—24 AWG 5—25 AWG 6—26 AWG 8—28 AWG 0—30 AWG

Wire Type
*A — Type E, 7 strand
*B — Type ET, 7 strand
*C — Type E, 19 strand
*D — Type ET, 19 strand
F — 7 strand per MIL-W-22759/11 (#28 AWG only)
G — 19 strand per MIL-W-22759/11 26 AWG, 24 AWG
L — Copper, solid
Q — Stranded per MIL-W-22759/33

*Per MIL-W-16878

Wire Color/Finish
1 — All white
2 — All yellow
3 — All gray
4 — Gold plated
5 — Tin dipped gold plated
6 — Bare (unfinished)
7 — Color coded per MIL-STD-681, System 1
8 — Special color code
9 — Ten basic color repeating. Counts starts with cavity A1, color black. (A1, ..., Ax, B1, ..., Bx, C1, ..., Cx, D1, ..., Dx)

Wire Length

S — Solder pot
Z — Coke Bottle Termination (Receptacle only, see Table I)
ZA — 4 Row Wire Termination (Plug only)
ZB — 8 Row Wire Termination (Plug only)
X — Special Wire and/or other than above

Table I

Dash No.	Gap Between Bushing "E"	F Dim.	G Dim.	H Dim. (Ref.)
1	**.100** 2.54	**.120** 3.05	**.180** 4.57	**.330** 8.38
2	**.093** 2.36	**.060** 1.52	**.150** 3.81	**.330** 8.38
3	**.118** 2.99	**.235** 5.97	**.260** 6.60	**.483** 12.27
4	**.145** 3.68	**.120** 3.05	**.180** 4.57	**.330** 8.38

Dimensions are shown for reference purposes only. Specifications subject to change.

Dimensions are in millimeters unless otherwise specified.

USA: +1 800 522 6752
Asia Pacific: +86 0 400 820 6015
UK: +44 800 267 666

For additional support numbers please visit www.te.com

Table of Contents

CeeLok FAS-T Connectors, Cable Assemblies, and Associated Products
Introduction 6-2
CeeLok FAS-T Connector . . . . . 6-3 to 6-5
Cable Assemblies 6-6
Termination Devices 6-7
Molded Products 6-8
High Data Rate Cables 6-8
CeeLok FAS-T Nano Circular Connectors . . . . . 6-9 to 6-12
Quadrax Contacts, Connectors and Cables
Introduction 6-13
Electrical Characteristics 6-14
Product Family Overview 6-15
Quadrax Contacts . . . . . 6-16 to 6-18
Quadrax/Twinax Contact Accessories 6-19
ARINC Size 8 Quadrax Connectors 6-20, 6-21
Rectangular Connectors . . . . . 6-22 to 6-25
Custom MIL-DTL-38999 Series III Style Circular Connectors . . . . . 6-26 to 6-30
QUADLITE Quadraxial Cables . . . . . 6-31 to 6-35
Custom Solutions 6-36

Catalog 1308940
Revised 9-14

www.te.com

Dimensions are shown for reference purposes only. Specifications subject to change.

Dimensions are in millimeters unless otherwise specified.

USA: +1 800 522 6752
Asia Pacific: +86 0 400 820 6015
UK: +44 800 267 666

For additional support numbers please visit www.te.com

Introducing CeeLok FAS-T Connectors, Cable Assemblies, and Associated Products

TE's CeeLok FAS-T connector is **is one of the most rugged, small form factor, 10 Gigabit Ethernet, field terminable I/O connector** in the Aerospace, Defense and Marine marketplace. It has been designed to perform in some of the most extreme environments in the industry, while providing substantial size and weight savings via its small shell size 8 form factor.

TE also offers associated products such as Band Straps, Termination Devices, Molded Boots, Wire and Cable and complete harnessing capabilities that complement this exciting new connector.

Dimensions are shown for reference purposes only. Specifications subject to change.

Dimensions are in millimeters unless otherwise specified.

USA: +1 800 522 6752
Asia Pacific: +86 0 400 820 6015
UK: +44 800 267 666

For additional support numbers please visit www.te.com

CeeLok FAS-T Connector

Product Facts

- **1 Gbit-Ethernet and 10 Gbit-Ethernet when used with Cat 5e, Cat 6A or Cat 7 cables**
- **Crimp snap, 39029-style contacts for easy termination and field repairability**
- **Backshell integrated in plug body provides low profile, low cost, low weight strain relief and EMI protection**
- **T-shaped pin pattern improves SI through uniform crosstalk cancellation**

- **Compatible with multiple braid terminations, adaptor styles and seal boots**
- **Scoop-proof design**
- **Insert assembly mechanically retained for ≤ 25 lb. retention force**
- **Robust coupling ring mechanism**
- **Size 8 shell saves weight and space**

Applications

- 1 Gbit-Ethernet or 10 Gbit-Ethernet in extreme aerospace, defense and marine environments such as:

Military

- Rotary and Fixed Wing
- Ground Vehicles
- Soldier Systems
- Missiles and Smart Munitions
- Space
- Shipboard
- C4I

Commercial and Civilian Aircraft

- In Flight Entertainment & Connectivity
- Production Breaks (high speed signal)
- Avionics
- Communication Systems

Electrical

- 1 Gbit-Ethernet and 10 Gbit-Ethernet when used with Cat5e, Cat6A or Cat7 cables
- Electrical performance specifications:
  - Insulation resistance: 5000 mega-ohms ambient, 1000 mega-ohms at 175˚C
  - Dielectric withstanding voltage: 500 VAC sea level, 100 VAC @ 70,000 ft.
  - Shielding effectiveness per MIL-DTL-38999
  - Shell to shell conductivity - 5mV initial, 10mV final

Mechanical

- Performance specifications:
  - Vibration, Sine: MIL-DTL-38999 Series III (60G), 4 hrs per axis, no elevated temperature
  - Vibration, Random: EIA-364-28 Condition VI Letter J (43.92G)
  - Durability: 500 mating cycles
  - Contact Retention: 10 lb. min.
  - Coupling Torque: 8 in-lb. max.

Environmental Properties

- Operating Temperature: -65˚C to +175˚C
- Sealing:

  Altitude Immersion: 70,000 ft. (mated condition)

  IP67: Mated condition

  IPX6 (water jet): Receptacle, panel mounted (unmated condition)
- Corrosion Resistance: 500 hr. Salt Mist - Black Zinc Nickel per AMS-2417

Materials

Shell: Shells available in Electroless Nickel or Black Zinc for DOD-Approved, RoHS compliant, corrosion resistance (500 hr Salt Mist)

Insert: High temperature thermoplastic for excellent temperature endurance. Low dielectric constant for superior signal integrity.

Contacts: BeCu alloy

Standards and Specifications

Product Specification: 108-2482

Application Specification: 114-32025

Instruction Sheet: 408-32046

Test Report: 501-134002

Application Tooling

Hand Crimp Tool: M22520/2-01

Crimp Positioner: TE PN 2217375-1

Insertion/Extraction Tool: TE PN 2217376-1

Catalog 1308940
Revised 9-14

www.te.com

Dimensions are shown for reference purposes only. Specifications subject to change.

Dimensions are in millimeters unless otherwise specified.

USA: +1 800 522 6752
Asia Pacific: +86 0 400 820 6015
UK: +44 800 267 666

For additional support numbers please visit www.te.com

CeeLok FAS-T Connector (Continued)

Product Dimensions

Boxmount Receptacle Kit Assembly Part Number 2102343

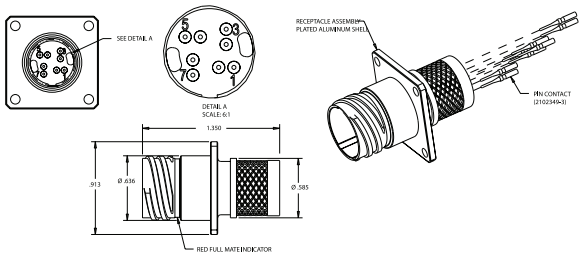

Receptacle Kit Assembly Part Number 2102352

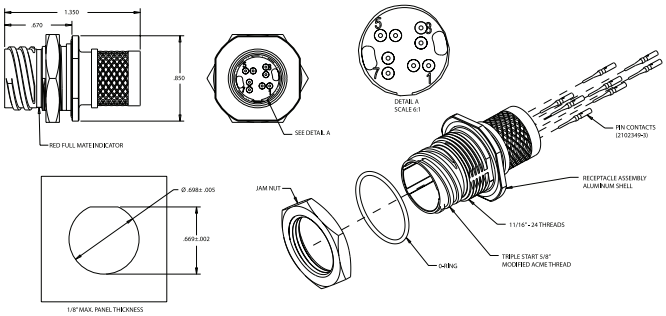

Jam Nut Receptacle Assembly, PC Tail Part Number 2102351

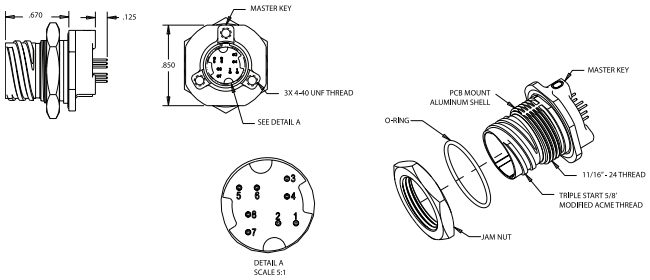

Plug Kit Assembly Part Number 2102353

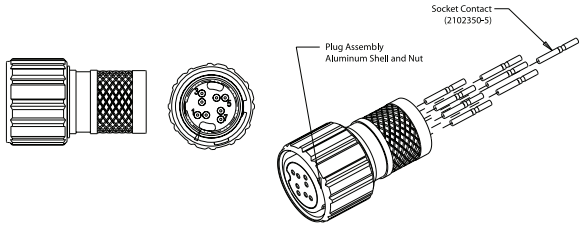

Boxmount Receptacle Assembly, PC Tail Part Number 2102453

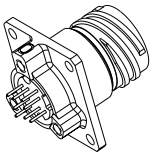

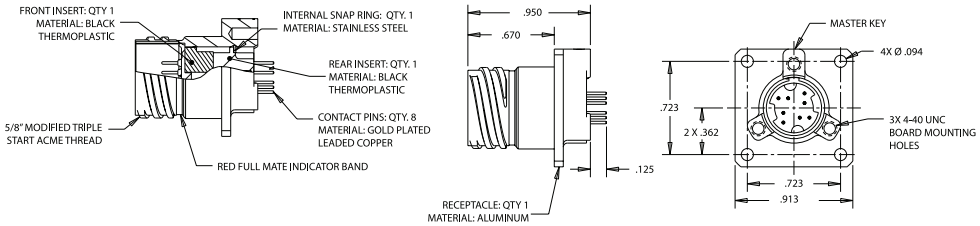

Dimensions are shown for reference purposes only. Specifications subject to change.

Dimensions are in millimeters unless otherwise specified.

USA: +1 800 522 6752
Asia Pacific: +86 0 400 820 6015
UK: +44 800 267 666

For additional support numbers please visit www.te.com

CeeLok FAS-T Connector (Continued)

Pin Contact
24-26 AWG
Part Number 2102349-3

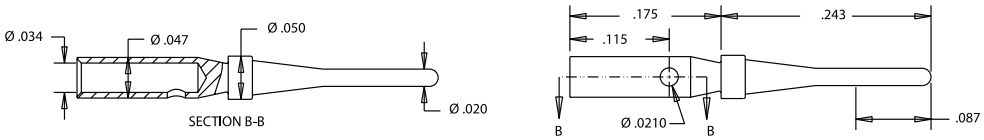

Socket Contact
24-26 AWG, Hooded
Part Number 2102350-5

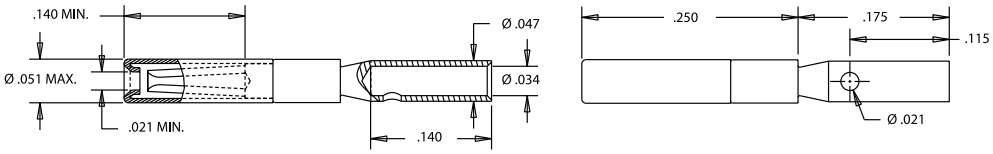

Protective Cover Cap, Plug
Part Number 2221682-1

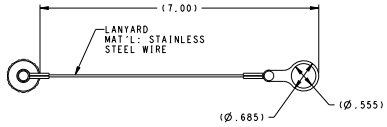

Protective Cover Cap, Receptacle
Part Number 2221478-1

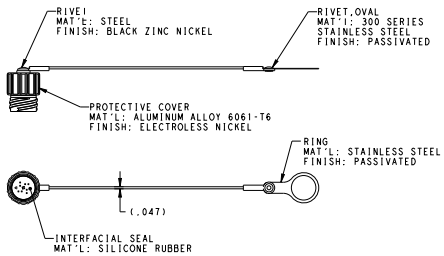

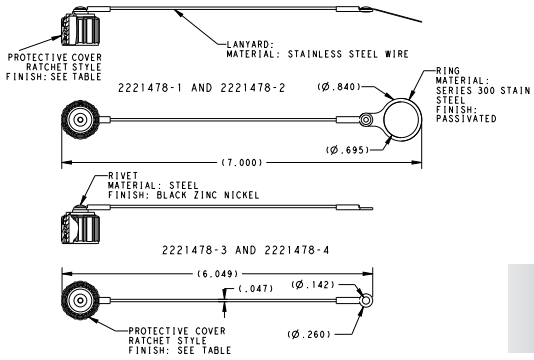

Product Offering

TE Part Numbers	Description	Plating	Key
2102343-1	Receptacle Kit, Boxmount	ElNi	N
2102343-2	Receptacle Kit, Boxmount	Black ZnNi	N
2102343-3	Receptacle Kit, Boxmount	ElNi	A
2102343-4	Receptacle Kit, Boxmount	Black ZnNi	A
2102343-5	Receptacle Kit, Boxmount	ElNi	B
2102343-6	Receptacle Kit, Boxmount	Black ZnNi	B
2102351-1	Jam Nut Receptacle, PC Tail	ElNi	N
2102351-2	Jam Nut Receptacle, PC Tail	Black ZnNi	N
2102351-3	Jam Nut Receptacle, PC Tail	ElNi	A
2102351-4	Jam Nut Receptacle, PC Tail	Black ZnNi	A
2102351-5	Jam Nut Receptacle, PC Tail	ElNi	B
2102351-6	Jam Nut Receptacle, PC Tail	Black ZnNi	B
2102352-1	Receptacle Kit	ElNi	N
2102352-2	Receptacle Kit	Black ZnNi	N
2102352-3	Receptacle Kit	ElNi	A
2102352-4	Receptacle Kit	Black ZnNi	A
2102352-5	Receptacle Kit	ElNi	B
2102352-6	Receptacle Kit	Black ZnNi	B
2102353-1	Plug Kit	ElNi	N
2102353-2	Plug Kit	Black ZnNi	N
2102353-3	Plug Kit	ElNi	A
2102353-4	Plug Kit	Black ZnNi	A
2102353-5	Plug Kit	ElNi	B
2102353-6	Plug Kit	Black ZnNi	B
2102453-1	Boxmount Receptacle, PC Tail	ElNi	N
2102453-2	Boxmount Receptacle, PC Tail	Black ZiNi	N
2102453-3	Boxmount Receptacle, PC Tail	ElNi	A
2102453-4	Boxmount Receptacle, PC Tail	Black ZnNi	A
2102453-5	Boxmount Receptacle, PC Tail	ElNi	B
2102453-6	Boxmount Receptacle, PC Tail	Black ZnNi	B

Dimensions are shown for reference purposes only. Specifications subject to change.

Dimensions are in millimeters unless otherwise specified.

USA: +1 800 522 6752
Asia Pacific: +86 0 400 820 6015
UK: +44 800 267 666

For additional support numbers please visit www.te.com

Cable Assemblies

Product Facts

- **End-to-end systems solutions provider**
- **Quick design turnaround using in-house software**
- **Full electrical and environmental testing capability**
- **Certified test processes and equipment ensures optimal signal integrity**
- **Qualified assembly experts**
- **Complete lot traceability**
- **Reliability in harsh environments**
- **ISO 9001: AS 9100 certified**

Description

- TE supplies proven technology for high bandwidth data links to customers in the aerospace, ground systems and marine industries. Military cable requirements are designed, manufactured and tested to perform reliably in harsh environments.
- Proper cable assembly is critical to realizing the full potential of the cable and connector technologies. TE's lightweight military cables and connector solutions are designed to reduce size and remove weight from your application, leading to benefits that include reduced fuel consumption and increased payload capacity.

Protocols

Data assemblies can be developed with the CeeLok FAS-T connector for the following high speed protocols:

- 100BASE-T Ethernet
- 1000BASE-T Ethernet
- 10GBASE-T Ethernet
- USB 2.0

Electrical

Testing capabilities include:

- DWV/IR
- Characteristic Impedance
- Return Loss/VSWR
- Insertion Loss
- Crosstalk
- Attenuation
- Eye Diagrams, etc.

Mechanical Tests Available:

- Vibration
- Mechanical Shock
- Mechanical Durability

Environmental Tests Available:

- Salt Spray
- Thermal Shock / Temperature Life
- Humidity / Fluid Immersion

Test Lab

Dimensions are shown for reference purposes only. Specifications subject to change.

Dimensions are in millimeters unless otherwise specified.

USA: +1 800 522 6752
Asia Pacific: +86 0 400 820 6015
UK: +44 800 267 666

For additional support numbers please visit www.te.com

Termination Devices

Product Facts

- **Available with and without pigtails**
- **Simple, quick termination**
- **Center or end strip for ease of termination**
- **Handles wide range of high data rate cables and diameters**

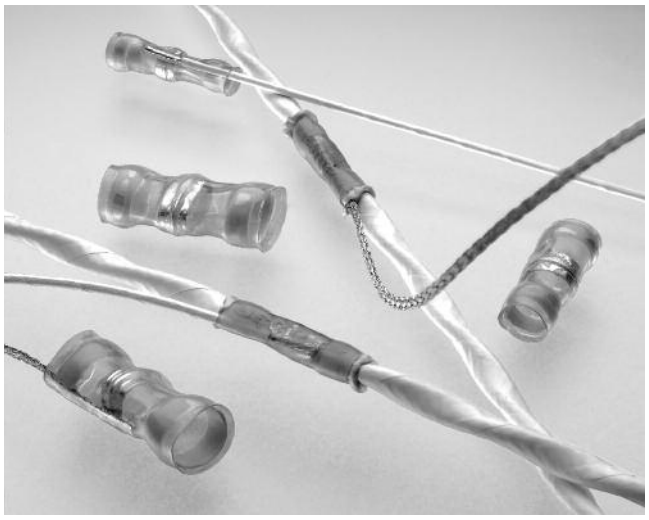

Description

- TE's SolderSleeve shield terminators attach a ground lead to cable shield for the purpose of grounding the EMI on the shield.

Environmental

- Operating Temperature: -55˚C to +200˚C
- Environmentally sealed
- Mechanically robust

Physical or Other Properties

- Terminates Tin, Silver and Nickel flat or round braids
- Provides 360˚ of shielding

Product Offering

Contact TE for a complete listing of SolderSleeve Shield Terminators.

Band Straps

Product Facts

- **Quick, easy, cost-effective and reliable termination of braided metallic shielding**
- **Low profile, one-piece design eliminates EMI leakage paths**
- **Band should be double wrapped to provide effective shield termination**

Description

- TE's CRES-Lock band strap provides a quick, easy, cost-effective and reliable termination of braided metallic shielding to the CeeLok FAS-T connector.
- Approved for aerospace and defense, the CRES-Lock band straps have successfully passed shock, vibration and environmental testing.

Material

- Passivated 304 stainless steel - 8" long x .125" wide

Electrical

- Operating Temperature: -65˚C to +200˚C
- Electrical Resistance: Meets ≤1.0 milliohm requirement of AS85049/128
- Corrosion Resistance: 500 hr. salt spray

Mechanical

- Tensile Strength: 200 lb.
- Braid Retention: Meets 100 lb. requirement of AS85049/128

Application Tooling

- Micro Tie-Dex II, A30199

Product Offering

TE Part Numbers	Description
BND-0812-S	Band Strap

Catalog 1308940
Revised 9-14

www.te.com

Dimensions are shown for reference purposes only. Specifications subject to change.

Dimensions are in millimeters unless otherwise specified.

USA: +1 800 522 6752
Asia Pacific: +86 0 400 820 6015
UK: +44 800 267 666

For additional support numbers please visit www.te.com

Molded Products

Product Facts

- **Only one boot needed for lower inventory cost**
- **Boots available in 3 configurations - conforms to the installation**
- **Boot materials of various temperature angles for ease of installation in different environments**
- **Epoxy sealing kits available**

Description

- Backshell boots (molded parts) add sealing and strain relief to the wires and cables used with the CeeLok FAS-T connectors. When provided with pre-applied adhesives, these heat shrinkable boots install quickly with high reliability sealing to IP67 levels.
- Backshell boots can be either straight, 45 or 90 degrees in shape to fit a variety of installation needs.

Application Tooling

- HL1910E or the HG-501A ThermoGun heat gun and appropriate hot air reflectors

Product Offering

Part Number	Description - Straight Boot	Part Number	Description - 90˚ Boot	Operating Temperature
878182-000	202K132-12-0	878183-000	222K132-12-0	-55˚C to 200˚C
481350-000	202K132-25/225-0	131250-000	222K132-25/225-0	-75˚C to 150˚C
878495-000	202K132-25-0	878512-000	222K132-25-0	-75˚C to 150˚C
879222-000	202K132-25/86-0	879268-000	222K132-25/86-0	-55˚C to 120˚C
879514-000	202K132-4/42-0	879515-000	222K132-4/42-0	-20˚C to 60˚C
822542-000	202K132-4-0	822548-000	222K132-4-0	-55˚C to 135˚C
830903-000	202K121-4/42-0	273122-000	222K121-4/42-0	-20˚C to 60˚C

High Data Rate Cables

CABLE PROTOCOLS

- **ETHERNET:**
  - **Quadrax (100BaseT, 100 Mbit/s)**
  - **Cat 5e (1000 BaseT or Gigabit Ethernet, 1 Gbit/s)**
  - **IEEE 1394**
  - **USB**

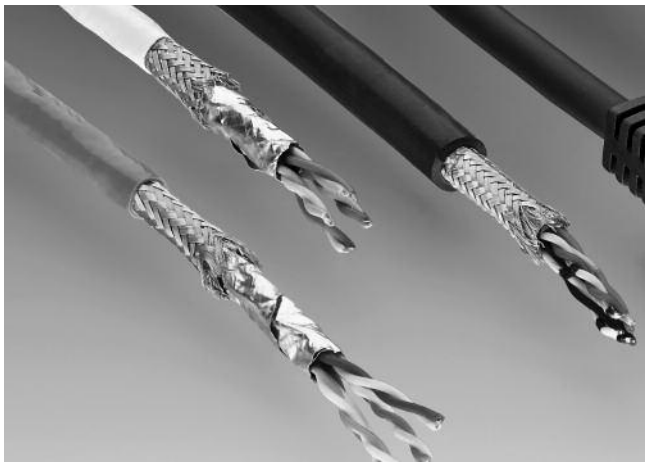

Description

- Lightweight, ruggedized high speed copper cables complete the CeeLok FAS-T connector end-to-end solution. Designs are available to meet a number of common data protocols, and can be customized to meet mission critical needs such as EMI, fluid resistance, and flammability.
- These high data rate cables utilize specialized polymer formulations, developed by TE that allow better mechanical and thermal performance in harsh environments. These polymer formulations enable the cables to be smaller and lighter weight because of TE's thin wall technology.
- For aerospace applications, TE has developed a state-of-the-art patented foaming process which affords better signal transmission through the dielectric. This lightweight material is rated to withstand temperatures up to 200˚C, and is FAA approved.
- For marine applications, TE developed a ruggedized zero halogen jacket that passes the rigorous military standards for flammability while meeting stringent smoke and toxicity requirements.
- TE also offers solutions to couple with the CeeLok FAS-T connector in marine and ground system markets where fluid resistance and flexibility are paramount.

Cable Protocol Details

- Operating temperature range from -55˚C to +200˚C
- Size range: 22 AWG to 28 AWG
- FAA approval
- Electrical testing capability including skew and eye pattens
- Full range of EMI shielding options
- Customized and hybrid designs available

Dimensions are shown for reference purposes only. Specifications subject to change.

Dimensions are in millimeters unless otherwise specified.

USA: +1 800 522 6752
Asia Pacific: +86 0 400 820 6015
UK: +44 800 267 666

For additional support numbers please visit www.te.com

CeeLok FAS-T Nano Circular Connectors

Product Facts

- **High Speed Performance**

  1 or 10 GbE rates for high-speed transmission of data, ideal for tight link budgets

  T-shaped pin pattern improves signal integrity through uniform cross talk cancellation

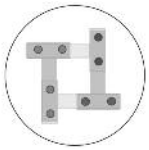

- **Space and Weight Savings**

  Nanominiature size enables high-speed connectivity in an extremely small space envelope

  Lightweight NANONICS housing available in push-pull or threaded coupling for a broad-range of applications and uses

- **Versatile**

  Available in board-mount and cable-applied versions

- **Rugged**

  Withstands the harsh operating environment typical of Aerospace, Defense and Marine applications

The latest addition to TE's line of high speed copper I/O connectors, CeeLok FAS-T nano circular takes the noise cancellation technology of the original CeeLok FAS-T connector and re-engineers it to fit our standard NANONICS connector shell. The new connector delivers up to 10 GbE speeds in nanominiature form factor, creating an industry-leading combination of high-speed,small size and low weight.

Description

TE Connectivity's (TE) CeeLok FAS-T Nano Circular connector is arugged, nano-miniature I/O connector capable of meeting 10 GbE performance. The patented, noise-cancelling contact configurationminimizes cross talk making it ideal for a variety of markets.

Applications

Typical applications include:

- Military Weapons
- Ground Support Systems
- Soldier Worn Applications
- Avionics
- Instrumentation
- Down-hole Telemetry Tools

Mechanical

- Vibration, Sine: 10-2000 Hz, 20g (EIA-364-28, Test Condition IV)
- Vibration, Random: 50-2000 Hz, 46.3g (EIA-364-28, Test Condition V, Letter K)
- Mating Cycles (Min): 250 Electroless Nickel plated aluminum shells
- Mechanical Shock: 300g, 3ms, Half-sine (EIA364-27, Test Condition D)
- Weights: Push-pull plug with a straight backshell and 1 meter of TurboTwin cable weighs less than 13g. A PCB mount receptacle weighs less than 3g.

Electrical

- 10 GbE using Madison Cable's TurboTwin cable (factory terminated)
- IR: 5000 MOhms ambient; 1000 MOhms at temperature
- DWV: 500 VAC Sea Level; 100 VAC @ 70,000 feet

Environmental

- Operating Temperature: -55˚C to +125˚C*
- Sealing:
  Immersion: IP68, Mated
  Water Jet: IPX6, Mated
  Dust: IP6X, Mated

*This is utilizing high-temp Madison TurboTwin cable.

Catalog 1308940
Revised 9-14

www.te.com

Dimensions are shown for reference purposes only. Specifications subject to change.

Dimensions are in millimeters unless otherwise specified.

USA: +1 800 522 6752
Asia Pacific: +86 0 400 820 6015
UK: +44 800 267 666

For additional support numbers please visit www.te.com

CeeLok FAS-T Nano Circular Connectors (Continued)

Standards and Specifications

Product Specification: 108-32048

Qualification Test Report: 501-134021

Material

Shells: Electroless Nickel Plated Aluminum (standard) or Passivated Stainless Steel (increased durability)

Insert: High temperature thermoplastic for excellent temperature endurance and superior signal integrity

Contacts: Gold plated BeCu Alloy

Accessories

Straight braid-clamp style backshells as well as right-angle versions are factory installed. Right-angle backshells can be oriented in 8 different directions. See PN chart below.

Note: for Band straps and Molded Parts - contact TE Connectivity

Part Numbers

TE Part Numbers	Position	Description
1925248-1 *	8	Quick disconnect, metal, plug, 30 AWG 10G TurboTwin pair, 36"
1925249-1	8	Quick disconnect, metal, plug, 30 AWG 10G TurboTwin pair, 36", straight braid clamp backshell
1925250-1	8	Quick disconnect, metal, 30 AWG 10G TurboTwin pair, 36", right-angle braid clamp backshell, orientation 5
1925251-1 *	8	Threaded coupling, metal, plug, 30 AWG 10G TurboTwin pair, 36"
1925252-1 *	8	Threaded coupling, metal, plug, 30 AWG 10G TurboTwin pair, 36", straight braid clamp backshell
1925253-1	8	Threaded coupling, metal, plug, 30 AWG 10G TurboTwin pair, 36", right-angle braid clamp backshell, orientation 5
1925254-1	8	Flanged coupling quick disconnect, metal, plug, 30 AWG 10GTurboTwin pair, 36"
1925255-1	8	Flanged coupling quick disconnect, metal, plug, 30 AWG 10GTurboTwin pair, 36", straight braid clamp backshell
1925256-1	8	Flanged coupling quick disconnect, metal, plug, 30 AWG 10GTurboTwin pair, 36", right angle braid clamp backshell, orientation 5
1925257-1	8	Quick disconnect, metal, receptacle, 30 AWG 10G TurboTwin pair, 36" front flush mount
1925258-1	8	Quick disconnect, metal, receptacle, 30 AWG 10G TurboTwin pair, 36", rear panel mount
1925259-1	8	Quick disconnect, metal, receptacle, 30 AWG 10G TurboTwin pair, 36", rear panel mount, straight braid clamp backshell
1925260-1	8	Quick disconnect, metal, receptacle, 30 AWG 10G TurboTwin pair, 36", rear panel mount, right angle braid clamp backshell, orientation 5
1925261-1	8	Quick disconnect, metal, receptacle, vertical PCB mount, through-hole,10GbE, .125" tin/lead solder dipped leads, panel mount

*Drawings shown on pages 6-11 and 6-12.

Dimensions are shown for reference purposes only. Specifications subject to change.

Dimensions are in millimeters unless otherwise specified.

USA: +1 800 522 6752
Asia Pacific: +86 0 400 820 6015
UK: +44 800 267 666

For additional support numbers please visit www.te.com

Part Number 1925248-1
Quick Disconnect Plug

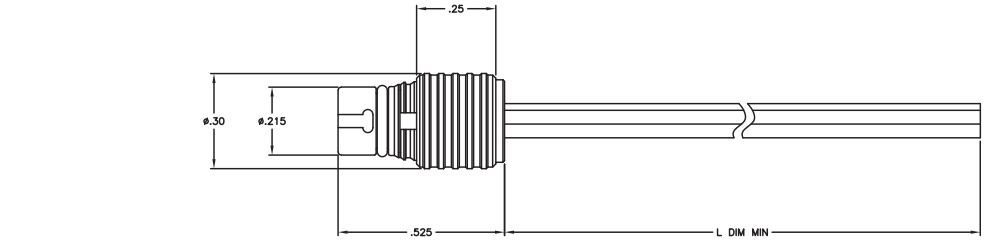

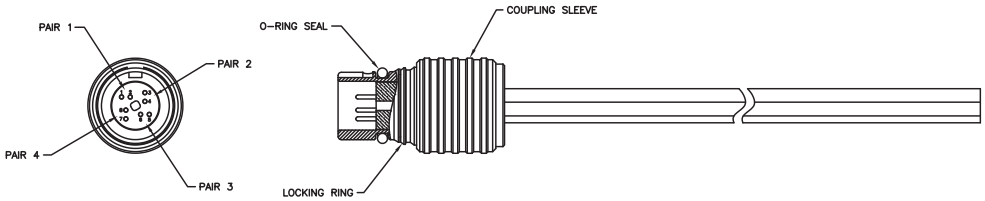

Part Number 1925251-1
Threaded Coupln Plug

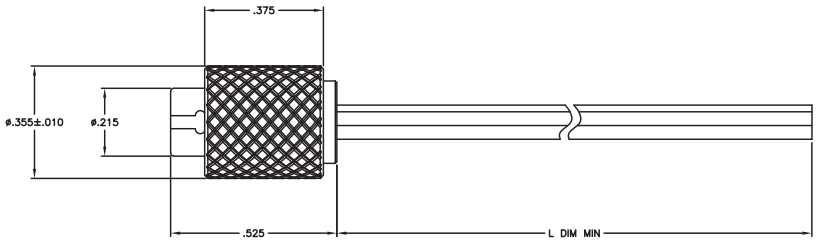

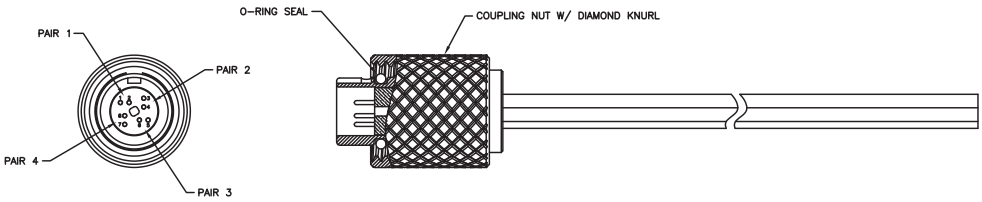

Part Number 1925254-1
Flanged Coupling Plug

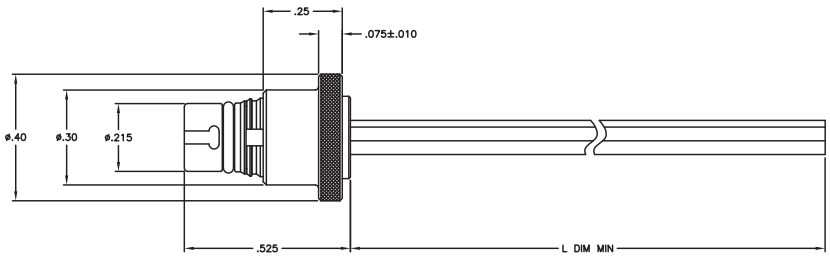

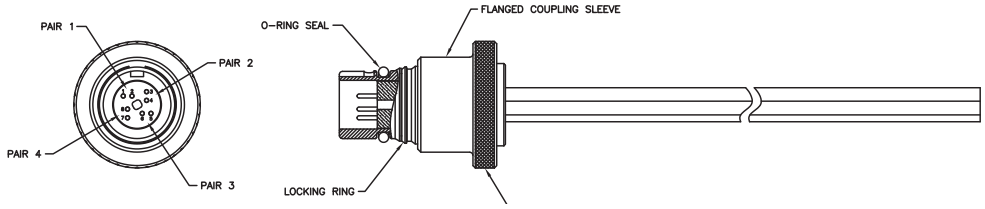

Dimensions are shown for reference purposes only. Specifications subject to change.

Dimensions are in millimeters unless otherwise specified.

USA: +1 800 522 6752
Asia Pacific: +86 0 400 820 6015
UK: +44 800 267 666

For additional support numbers please visit www.te.com

Part Number 1925258-1
Quick Disconnect Receptacle

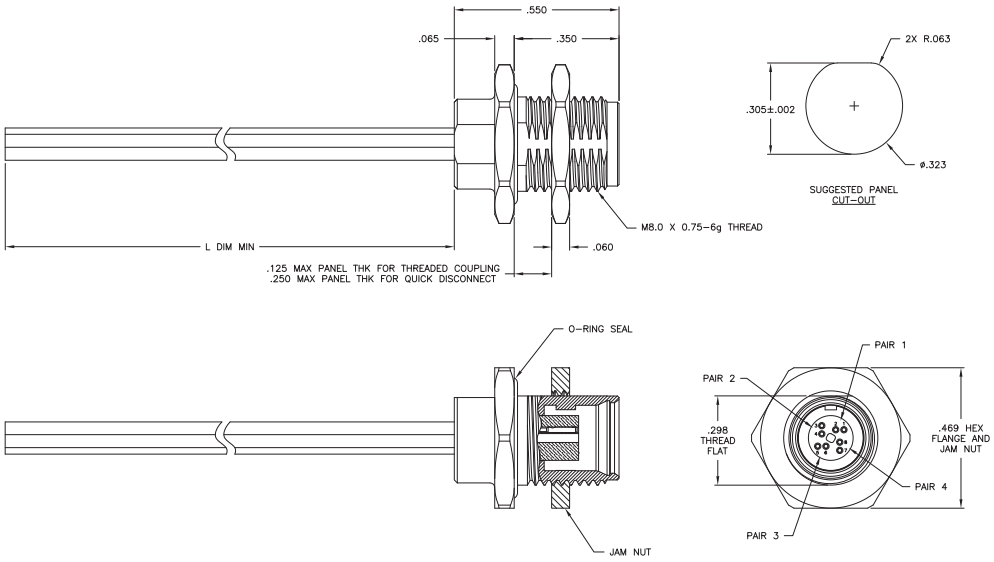

Part Number 1925261-1
Quick Disconnect Vertical PCB Mount Receptacle

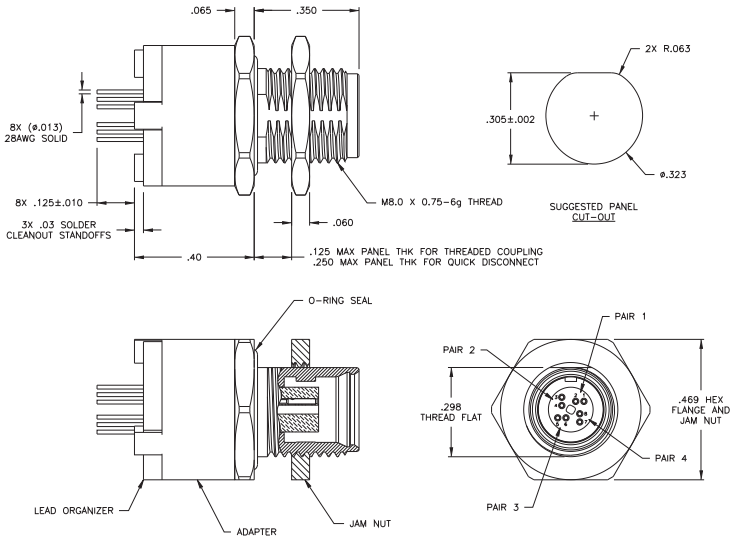

Introduction

Product Facts

- **2 mm centerlines**
- **Designed per ARINC 600 — Supplement 18**
- **Fits into keyed connector inserts for connectors such as: ARINC 404 & 600, General Purpose Rectangular (GPR), MIL-DTL-38999 style, BACC65/EPXB, and custom interconnects**
- **Patented single piece dielectric design simplifies termination and improves reliability**
- **Size 8 contacts are designed for standard hex crimp per M2252/5-01 and M22520/5-45**
- **24 AWG internal contacts are designed for crimp tooling M22520/2-01 and Daniels K-709**
- **Shells are keyed for proper orientation inside connector insert blocks**
- **Rear Release/Rear Remove cable versions and Front Release/Front Remove PCB versions**
- **Uses standard insertion/extraction tool**
- **Meets ASTM E595 outgassing limits for spacecraft materiels**

A multi-signal contact system consisting of two differential pairs (matched impedance) used with quadraxial Ethernet and Fiber Channel cables. Available in shell size 8 (keyed); 24 AWG pin and socket contacts, Hex Crimp version as well as pin PCB tail solderable versions. Adaptable to a variety of connectors (ARINC 600, 404, D-Subminiature connectors, MIL-DTL-38999 style, etc.)

Designed for use in high speed applications such as Gigabit Ethernet, IEEE 802.3Z and Fiber Channel X3T11.2 for use on Commercial Avionics Systems, Aircraft Data Networks, Military Communications, In-Flight Entertainment, and Space applications.

Materials

Contacts, Shells, Ferrules — Copper alloy with gold over nickel finish. One-piece thermoplastic dielectric.

Performance Characteristics

Maximum Mating Force per Contact Assembly — 2.75 lbf.

Minimum Un-mating Force per Contact Assembly — 1.25 lbf.

Durability — 500 mating/unmating cycles

Typical Electrical Performance

Bandwidth — as high as 3 GHz (see characterization chart on page 6-10)

Data Rate — in excess of 2 Gb/s

Characteristic Impedance — 100 ohms ± 10 ohms

Maximum Voltage Rating — 500 Vrms @ sea level

Dielectric Withstanding Voltage — 1000 VAC rms between any two contacts @ sea level; 500 VAC rms between any contact and outer shell @ sea level

Technical Documents

Product Specifications —

108-2131	Quadrax Cable and PCB Connectors
108-2199	Quadrax MIL-DTL-38999 Style Connectors
108-2311	Quadrax 4Q4 In-Line D-Sub Style Connectors

Test Reports

501-574	Quadrax Cable and PCB Connectors
501-660	Quadrax MIL-DTL-38999 Style Connectors
501-738	Quadrax 4Q4 In-Line D-Sub Style Connectors
502-1182	Quadrax Rectangular Connector
—	Qualified to Boeing Spec. BPS-C-193

Application Specifications

114-13123	Quadrax Rectangular Connectors and Quadrax Contacts
114-13163	Quadrax Circular Connectors and Quadrax Contacts
114-13190	In-Line Quadrax/Twinax Connectors
114-13233	Quadrax D-Sub Connectors and Quadrax Contacts

Catalog 1308940
Revised 9-14

www.te.com

Dimensions are shown for reference purposes only. Specifications subject to change.

Dimensions are in millimeters unless otherwise specified.

USA: +1 800 522 6752
Asia Pacific: +86 0 400 820 6015
UK: +44 800 267 666

For additional support numbers please visit www.te.com

Electrical Characteristics

- **Designed for use with 100 ohm and 150 ohm characteristic impedance star quad cable. Reference contact chart on page 10.**
- **Signal integrity testing was completed per SFF-8410 (see engineering test report 502-1182).**
- **Characteristic impedance: 100 ohm ± 10 ohm nominal (measured 102.85 ohms)**
- **Near end cross talk (NEXT) in the time domain: 0.89% measured on Tek 11801C Digital Sampling Oscilloscope**
- **Eye Patterns (Differential Mode, 1 meter and 11.2 meter cable test lengths)**
- **The minimum output eye opening for a 1 V launch voltage measured at 50% of the period is:**
  - **1 meter, 100 MHz Eye Opening 928.53 mV**
  - **1 meter, 1.25 GHz Eye Opening 839.77 mV**
  - **11.2 meter, 100 MHz Eye Opening 761.60 mV**
  - **11.2 meter, 1.25 GHz Eye Opening 315.20 mV**

Return Loss

1 Meter Cable Length

Frequency MHz	dB	VSWR*
50	34.33	1.039
62	36.03	1.032
102	40.21	1.02
502	21.21	1.191
1002	13.34	1.549
1954	9.32	2.039
2950	10.27	1.884

11.2 Meter Cable Length

Frequency MHz	dB	VSWR*
50	35.26	1.035
62	36.87	1.029
102	38.90	1.023
502	26.02	1.105
1002	14.62	1.456
1798	11.74	1.698
2502	13.34	1.549
3702	6.54	2.781

*calculated

Insertion Loss

1 Meter Cable Length

Frequency MHz	dB
50	0.13
62	0.19
102	0.27
502	0.87
1002	1.39
2002	2.48
3002	3.29

11.2 Meter Cable Length

Frequency MHz	dB
50	1.87
62	2.13
102	2.72
502	6.38
1002	10.06
1798	15.69
2502	19.47
3702	28.20

Typical Insertion Loss
1 Meter Length, 100 Ohm Cable

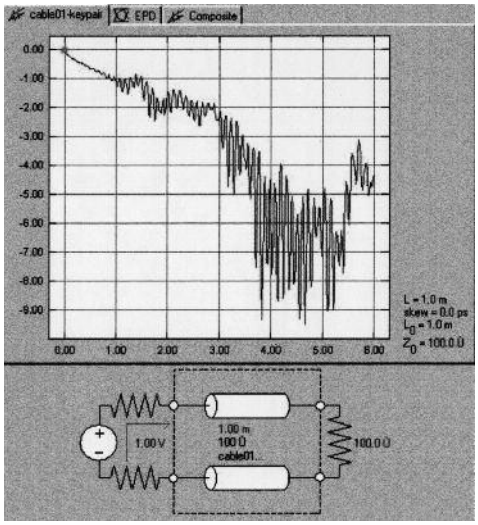

Eye Pattern, 100 Ohm Cable
(Time Domain Measurement of Voltage vs. Time)

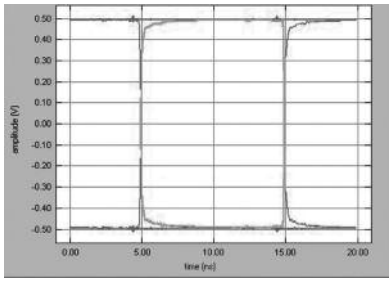

100 Mb/s Data Rate

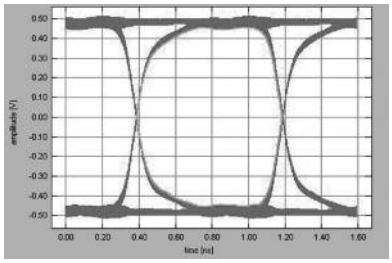

1 Gb/s Data Rate

Catalog 1308940
Revised 9-14

www.te.com

Dimensions are shown for reference purposes only. Specifications subject to change.

Dimensions are in millimeters unless otherwise specified.

USA: +1 800 522 6752
Asia Pacific: +86 0 400 820 6015
UK: +44 800 267 666

For additional support numbers please visit www.te.com

Product Family Overview

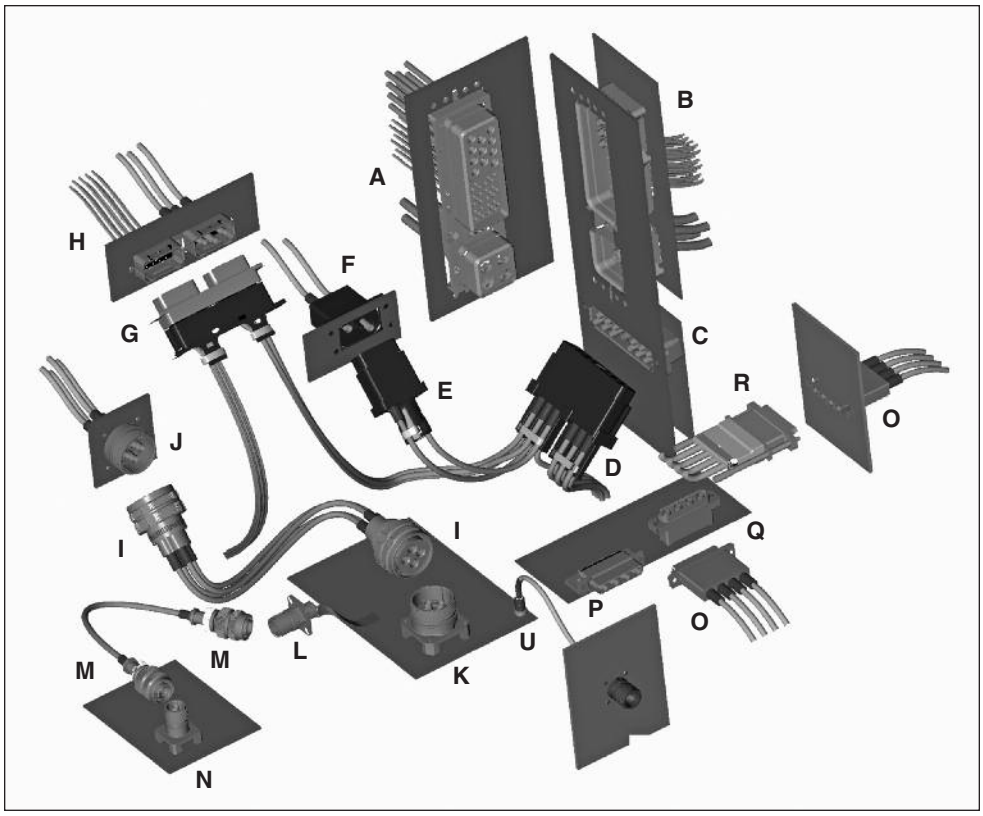

Legend

ARINC 600 Connectors:

A Size 2 Plug Assembly with Q11 Quadrax Insert

B Size 2 Receptacle Assembly with Q11 PCB Tail Quadrax

Quadrax Rectangular Connectors:

C 12 Position Receptacle

D 12 Position Plug Assembly with Strain Relief and Seal Boots

E 2 Position Plug Assembly with Strain Relief and Seal Boots

F 2 Position Panel Mount Receptacle with Strain Relief and Seal Boots

U Direct Attach

General Purpose Rectangular Connectors:

G GPRB2 Plug, Dual Insert Configuration w/3 Pos. Quadrax Insert

H GPRB2 Receptacle, Dual Insert Configuration w/3 Pos. Quadrax insert

38999 Style Circular Connectors:

I Size 19 Plug, 4Q4 Quadrax arrangement with Seal Boots

J Size 19 Receptacle, 4Q4 Quadrax arrangement, Panel Mount Configuration w/Seal Boots

K Size 19 Receptacle, 4Q4 Quadrax arrangement, PCB Mount

L Size 9 Receptacle, 1Q1 Quadrax arrangement, Panel Mount w/Custom Flex Circuit Assembly for direct attachment to printed circuit board

M Size 9 Plug, 1Q1 Quadrax arrangement with Seal Boot

N Size 9 Receptacle, 1Q1 Quadrax arrangement, PCB Mount

D-Sub Style Quadrax Rectangular Connectors:

O Plug with Seal Boots

P Receptacle, for right-angle PCB mount

Q Receptacle, for vertical PCB mount

R Cable Receptacle with Seal Boots

Catalog 1308940
Revised 9-14

www.te.com

Dimensions are shown for reference purposes only. Specifications subject to change.

Dimensions are in millimeters unless otherwise specified.

USA: +1 800 522 6752
Asia Pacific: +86 0 400 820 6015
UK: +44 800 267 666

For additional support numbers please visit www.te.com

Quadrax Contacts

Product Facts

- Patented one-piece dielectric inserts for easy assembly and lowest applied cost
- Available with silicone seal boots rated for 50,000 ft. altitude immersion
- Crimp type, screw machined, 24 AWG contacts
- Quadrax size 8 shells are keyed per ARINC 600 for correct orientation inside connector inserts
- Twinax contacts: Qualification tests pending
- Direct Attach to PCB
  - Asymmetric standoff leg provides built-in keying to PC board
- Internally keyed contacts for MIL-DTL-38999 connectors
  - One-piece dielectric inserts for easy assembly and lowest applied cost

PC Tail Contacts

Part Number	Description	Dim. A
1445626-1	Contact, Pin, Solder Tail	.228 [5.79]
1445626-2	Contact, Pin, Solder Tail	.422 [10.72]
1445626-3	Contact, Pin, Solder Tail	.181 [4.60]
1445626-4	Contact, Pin, Solder Tail	.297 [7.54]
1445626-5*	Contact, Pin, Solder Tail	.297 [7.54]

Crimp Style Contacts[1]

Part Number	Description	Hex Crimp
1445692-1	Contact Kit, Pin, Crimp	.218
1445692-3**	Contact Kit, Pin, Crimp, with wire seal boot	.218
1445692-4 ***	Contact Kit, Pin, Crimp, with wire seal boot*	—
1445693-1	Contact Kit, Socket, Crimp	.218
1445693-3**	Contact Kit, Socket, Crimp, with wire seal boot	.218
1445693-4 ****	Contact Kit, Socket, Crimp, with wire seal boot	—
Reference cables: Tensolite NF24Q100, NF26Q100, 24443/03130X-4(LD), 24443/9P025X-4(LD); Raychem CEC-RWC-18687, Raychem CEC-RWC-18664		
1445692-5**	Contact Kit, Pin, Crimp with wire seal boot	.218
1445692-6	Contact Kit, Pin, Crimp	.218
1445693-5**	Contact Kit, Socket, Crimp with wire seal boot	.218
1445693-6	Contact Kit, Socket, Crimp	.218
Reference cables: DRAKA F4703-3, F4704-4–insulation diameter is larger		
		Hex Crimp
1877039-1	Contact Kit, Pin, Crimp	.231
1877039-2**	Contact Kit, Pin, Crimp with wire seal boot	.231
1877040-1	Contact Kit, Socket, Crimp	.231
1877040-2**	Contact Kit, Socket, Crimp with wire seal boot	.231
Reference cables: Tensolite 26473/02006X-4(LD); Raychem CEC-RWC-18684, Raychem CEC-RWC-18680		

*Tails are solder dipped
**Used with Quadrax rectangular and circular connectors
***Qualified to Boeing BACC47GA1
****Qualified to Boeing BACC47GB1
(1) For other cables, contact TE.

Size 8 Quadrax Contacts

Part Number	Description	Hex Crimp
1811010-1	Socket kit with heat-shrink tubing	.218
1811269-1	Pin kit with heat-shrink tubing	.218

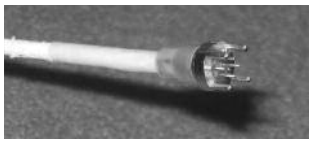

PC Tail Contact – Direct Attach to PCB			
Part Number	Description	Tail Length	Dim A
1954576-1	150 Ohm	.125 [3.18]	.250 [6.35]
1954576-2	100 Ohm	.125 [3.18]	.270 [6.86]
1954576-3	100 Ohm	.205 [5.21]	.270 [6.86]

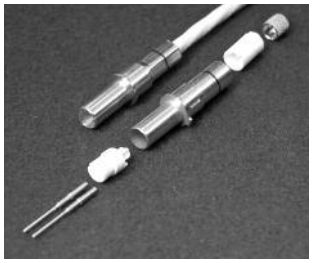

Size 8 Differential Twinax Contacts

Part Number	Description	Hex Crimp
1811865-1	Assembly, Pin, Twinax	.218
1811866-1	Assembly, Socket, Twinax	.218

See page 6-13 for Application Specifications

Catalog 1308940
Revised 9-14

www.te.com

Dimensions are shown for reference purposes only. Specifications subject to change.

Dimensions are in millimeters unless otherwise specified.

USA: +1 800 522 6752
Asia Pacific: +86 0 400 820 6015
UK: +44 800 267 666

For additional support numbers please visit www.te.com

Quadrax Contacts (Continued)

Size 8 Quadrax PCB Pin Contact
Front Release/
Front Remove Design
Part No. 1445626-1**
****various tail lengths**

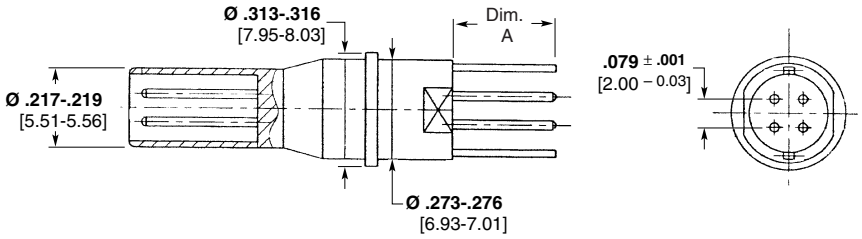

Blank
Front Release/
Front Remove Design
Part No. 1604940-2

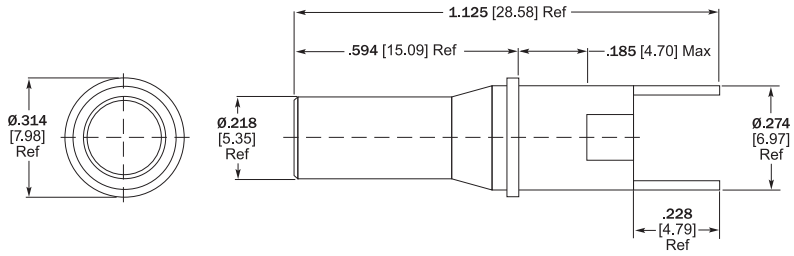

Size 8 Quadrax Pin Contact —
Crimp Style
Rear Release/
Rear Remove Design
Part No. 1445692-1*
***-3 with boot**

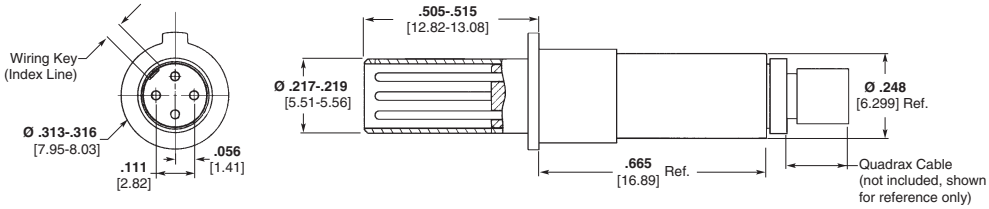

Size 8 Quadrax Socket Contact —
Crimp Style
Rear Release/
Rear Remove Design
Part No. 1445693-1*
***-3 with boot**

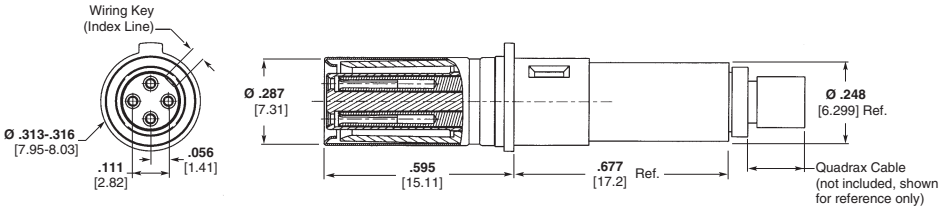

Dimensions are shown for reference purposes only. Specifications subject to change.

Dimensions are in millimeters unless otherwise specified.

USA: +1 800 522 6752
Asia Pacific: +86 0 400 820 6015
UK: +44 800 267 666

For additional support numbers please visit www.te.com

Quadrax Contacts (Continued)

PC Tail Contact – Direct Attach to PCB

- **100 and 150 ohm Systems**
- **Simple Direct Attach to PCB without connector for component reduction**
- **Designed from ARINC size 8 Quadrax contacts**
- **Low cost solution from both assembly and component ends**

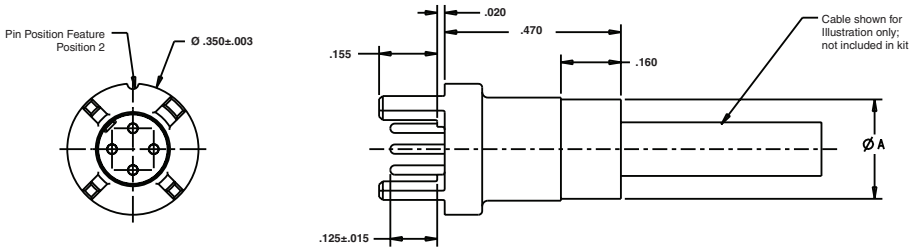

Part Number 1954576-1, -2: B = .125
Part Number 1954576-3: B = .205

Part Number	Impedance (Ω)	Dim A (Max)	Dim B
1954576-1	150	.270 [6.86]	.125 [3.18]
1954576-2	100	.250 [6.35]	.125 [3.18]
1954576-3	100	.250 [6.35]	.205 [5.21]

Size 8 Differential Twinax Contacts

100 Ohm Differential Pair Twinax Contact

- **Designed to meet the requirements of ARINC Specification 810 for 100 ohm size 8 non-concentric twin-axial contacts**
- **Works in all connectors accepting ARINC 600 style Quadrax contacts**

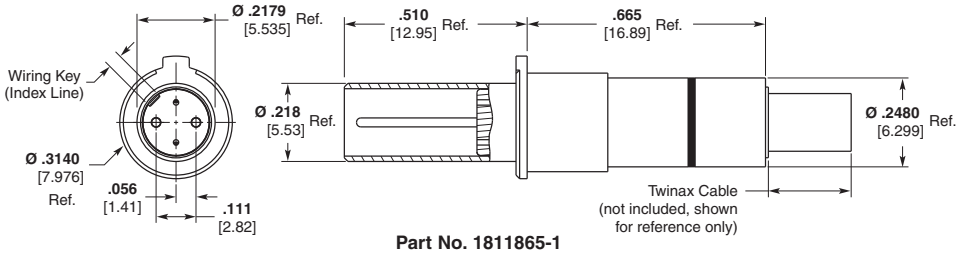

Part No. 1811865-1

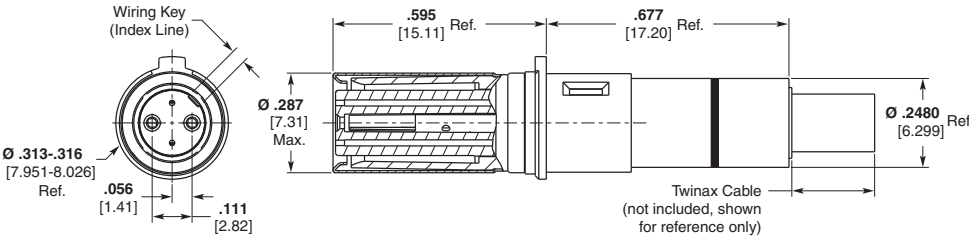

Part No. 1811866-1

Catalog 1308940
Revised 9-14

www.te.com

Dimensions are shown for reference purposes only. Specifications subject to change.

Dimensions are in millimeters unless otherwise specified.

USA: +1 800 522 6752
Asia Pacific: +86 0 400 820 6015
UK: +44 800 267 666

For additional support numbers please visit www.te.com

Quadrax/Twinax Contact Accessories

Size 8 Quadrax Extraction Tool Part No. 1738894-1

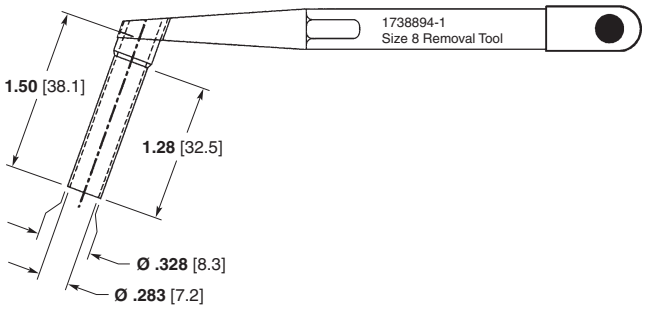

Seal Boots

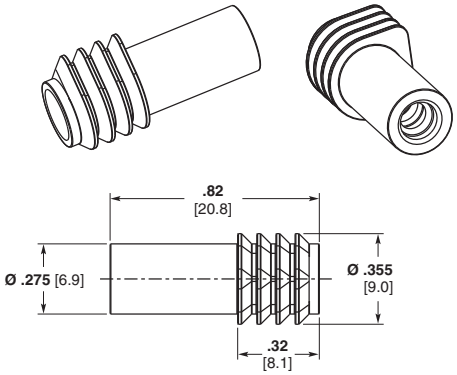

Wire Seal Boot
Part No. 1811481-1
Cable O.D. .145–.175
.218 Hex Crimp

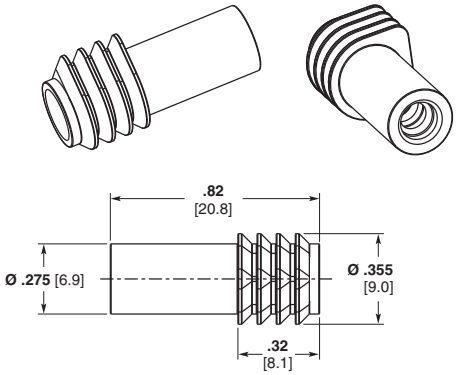

Wire Seal Boot
Part No. 1811943-1
Cable O.D. .170–.200
.231 Hex Crimp

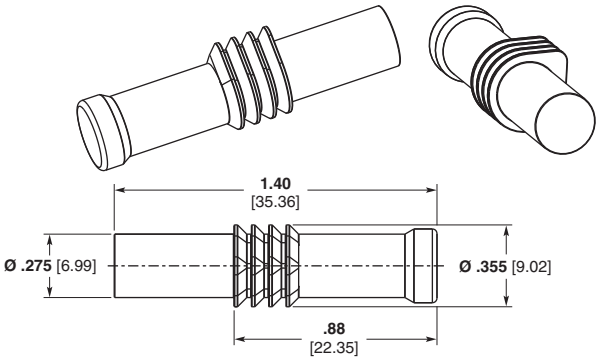

Solid Seal Boot
Part No. 1811633-1

Catalog 1308940
Revised 9-14

www.te.com

Dimensions are shown for reference purposes only. Specifications subject to change.

Dimensions are in millimeters unless otherwise specified.

USA: +1 800 522 6752
Asia Pacific: +86 0 400 820 6015
UK: +44 800 267 666

For additional support numbers please visit www.te.com

ARINC Size 8 Quadrax Connectors

Product Facts

- **Utilizes four size 24 screw-machined contacts with standard crimp tooling per M22520/2-01 and M22520/5-01 for ease of termination**
- **Front release/front removable PCB mount contact design for use in ARINC 600 receptacle connectors**
- **Rear release/rear remove crimp contact design for use in ARINC 600 plug connectors & receptacles**
- **Quadrax housing is keyed to assure mating alignment**
- **Contacts are on 2 mm centerline per ARINC 600 specification**
- **To extract Quadrax contact from connector insert, use Extraction Tool Part Number 1738894-1**
- **Per Supplement 18 to ARINC Specification 600**

ARINC Size 2 Connectors

Part Number	Type	Insert Arrangement A	Insert Arrangement B	Insert Arrangement C	Style	Shell Features	Contacts
1484406-2	Receptacle	Q11	Q11	68Q2	Front Release Front Remove	Electroless Nickel Plated, no clinch nuts	Size 22 signal & Quadrax contacts supplied loaded in inserts; post extension = .25 [6.35]
1484407-2	Plug	Q11	Q11	68Q2	Rear Release Rear Remove	Electroless Nickel Plated, no clinch nuts	Crimp style size 22 signal and Quadrax contacts supplied unloaded
1663032-1	Receptacle	150	150	11Q2	Front Release Front Remove	Chromate with six 4-40 clinch nuts	Signal, Power and Quadrax contacts supplied loaded in inserts; post extension = .25 [6.35]
1663900-1	Receptacle	Q11	Q11	85	Front Release Front Remove	Chromate, no clinch nuts	Signal, Power and Quadrax contacts supplied loaded in inserts; post extension = .25 [6.35]
1484620-1	Receptacle	Q11	Q11	85	Front Release Front Remove	Electroless Nickel Plated, with ten 4-40 clinch nuts	Signal, Power and Quadrax contacts supplied loaded in inserts; post extension = .15 [3.81]
1484621-1	Plug	Q11	Q11	85	Rear Release Rear Remove	Electroless Nickel Plated, no clinch nuts	Crimp contacts

ARINC Size 3 Connectors

Part Number	Type	Insert Arrangement A D	Insert Arrangement B E	Insert Arrangement C F	Style	Shell Features	Contacts
1663018-1	Receptacle	150 150	150 150	11Q2 11Q2	Front Release/ Front Remove	Electroless Nickel Plated	No contacts
1663018-2	Receptacle	150 150	150 150	11Q2 11Q2	Front Release/ Front Remove	Electroless Nickel Plated	Signal, Power and Quadrax contacts supplied loaded in inserts; post extension signal and power = .25 [6.35]; Quadrax = .200 [5.08]
1663018-3	Receptacle	150 150	150 150	11Q2 11Q2	Front Release Front Remove	Chromate with fourteen 6-32 clinch nuts	Signal, Power and Quadrax contacts supplied loaded in inserts, post extension = .25 [6.35]
1663019-1	Plug	150 150	150 150	11Q2 11Q2	Rear Release Rear Remove	Electroless Nickel Plated	No contacts
1663019-2	Plug	150 150	150 150	11Q2 11Q2	Rear Release Rear Remove	Electroless Nickel Plated	Crimp contacts
1663019-3	Plug	150 150	150 150	11Q2 11Q2	Rear Release Rear Remove	Chromate	Crimp contacts

Note: Custom insert combinations available upon request. Contact TE.

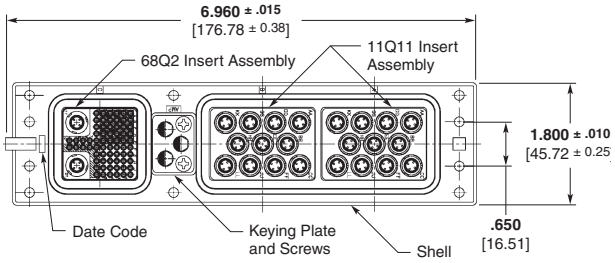

Receptacle, Assembly Size 2
Front Release/Front Remove
Part No. 1484406-2 shown

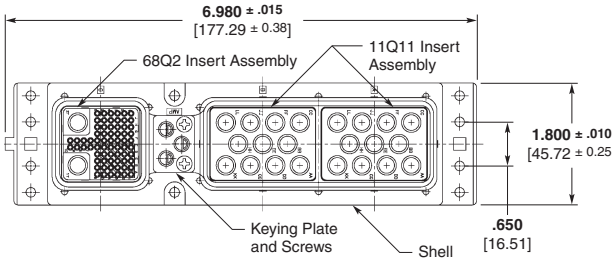

Plug, Assembly Size 2
Rear Release/Rear Remove
Part No. 1484407-2 shown

Catalog 1308940
Revised 9-14

www.te.com

Dimensions are shown for reference purposes only. Specifications subject to change.

Dimensions are in millimeters unless otherwise specified.

USA: +1 800 522 6752
Asia Pacific: +86 0 400 820 6015
UK: +44 800 267 666

For additional support numbers please visit www.te.com

ARINC Size 8 Quadrax Connectors (Continued)

Contact Inserts & Arrangement Codes — Shell Size 2 or 3

Shell Module A, B, D or E

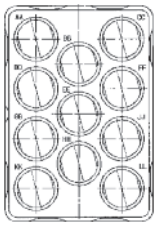

Q11 [1, 2, 3]
11 Size 8 Quadrax
Metal

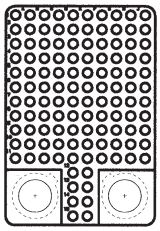

118Q2 [2,3, 4]
118 Size 22
2 Size 8 Quadrax

Shell Module C or F

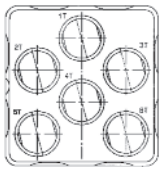

Q6 [1, 2, 3]
6 Size 8 Quadrax
Metal

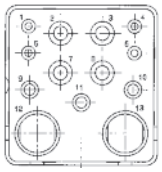

11Q2 [1, 2, 3]
4 Size 20
4 Size 12
3 Size 16
2 Size 8 Quadrax

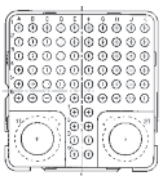

68Q2 [2, 3, 4]
68 Size 22
2 Size 8 Quadrax

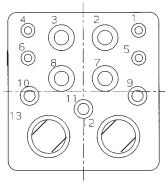

13CQ2 [2, 3]
4 Size 20
3 Size 16
4 Size 12
2 Size 8 Quadrax

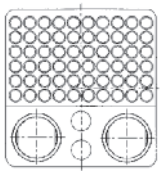

62Q2 [2, 3, 4]
60 Size 22
2 Size 16
2 Size 8 Quadrax

Note:
1. Available for plug or receptacle with rear release/remove contacts.
2. Available for receptacle only with all contacts front release/remove.
3. Standard size 8 contacts will not fit in Quadrax size 8 inserts. Also, Quadrax size 8 contacts will not fit into standard size 8 inserts.
4. Available for plug only with all contacts rear release/remove.

For complete listing of all ARINC 600 insert arrangements, reference catalog 1308940.

GPRB Insert Arrangements[1,2]

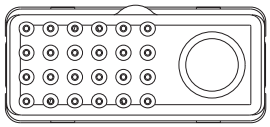

25QI3

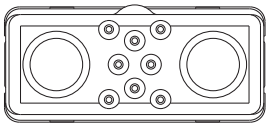

10Q23

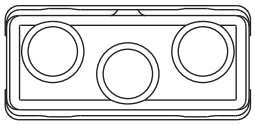

3Q33

Keying:

A **B**

Note:
1. Pin inserts: Mating faces shown above.
2. In a GPRB2 shell, one insert must be “A” keyed and the other one must be “B” keyed (See at right).
3. Size 8 cavity applicable for use with Arinc 600 Quadrax or Twinax contacts.

For complete listing of all General Purpose Rectangular insert arrangements, reference catalog 1654763.

Rectangular Connectors

Product Facts

- **High performance rectangular connector**
- **Available in 2, 4, and 12 positions**
- **Designed for use with wire seal boots and rated for use up to 50,000 ft. altitude**
- **Center jackscrew design for fast, reliable mating**
- **Aluminum shells are keyed and polarized, and are available with lightweight plastic backshell strain reliefs**
- **Provides excellent density in a rectangular profile for packaging flexibility.**
- **Qualified to Boeing Part Standard BPS-C-193**

Position	Part Number	Type	Mounting Style	Style	Polarization	Note:
2	1604896-2*	Receptacle	PCB	Front Release/Front Remove	Flat	
	1604897-5*	Receptacle	Panel Mount	Rear Release/Rear Remove	Flat	
	1604898-5*	Plug	Free-Hanging	Rear Release/Rear Remove	Flat	
	1604905-1*	Backshell - (1 pc)	—	—	—	Use w/1604897-5 or 1604898-5
4	1738949-2*	Receptacle	PCB	Front Release/Front Remove	Flat	
	1738950-2*	Receptacle	Panel Mount	Rear Release/Rear Remove	Flat	
	1738951-2*	Plug	Free-Hanging	Rear Release/Rear Remove	Flat	
	1738955-1*	Backshell - (1 pc)	—	—	—	Use w/1738950-2 or 1738951-2
12	1604798-2*	Receptacle	PCB	Front Release/Front Remove	Flat	
	1604799-5*	Receptacle	Panel Mount	Rear Release/Rear Remove	Flat	
	1604800-5*	Plug	Free-Hanging	Rear Release/Rear Remove	Flat	
	1604874-1*	Backshell - Receptacle (2 pc)	—	—	—	Use w/1604799-5
	1604874-2*	Backshell - Plug (2 pc)	—	—	—	Use w/1604800-5

*Jackscrew/Jackpost hardware included but not installed

2 Position

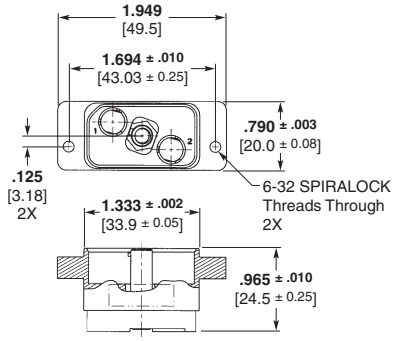

PCB Mount Receptacle (Part No. 1604896)

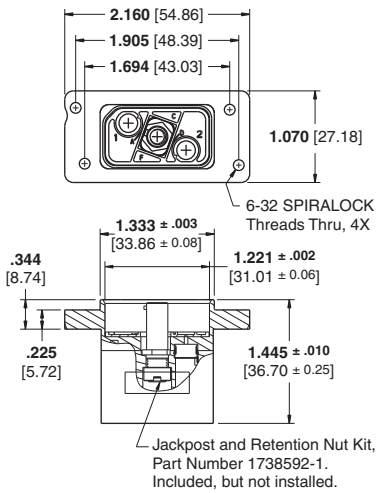

Panel Mount Receptacle (Part No. 1604897)

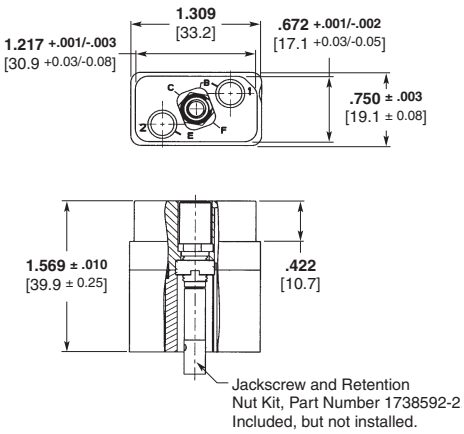

Free-Hanging Plug (Part No. 1604898)

SPIRALOCK is a trademark of Detroit Tool Industries Corporation.

Rectangular Connectors (Continued)

4 Position

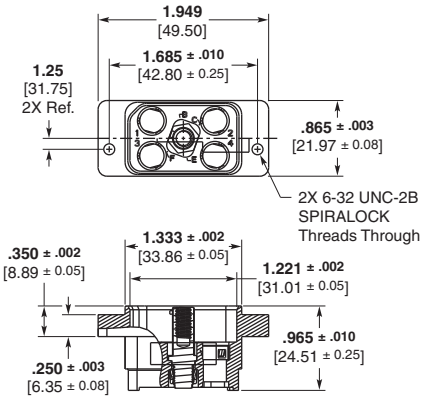

PCB Mount Receptacle
(Part No. 1738949)

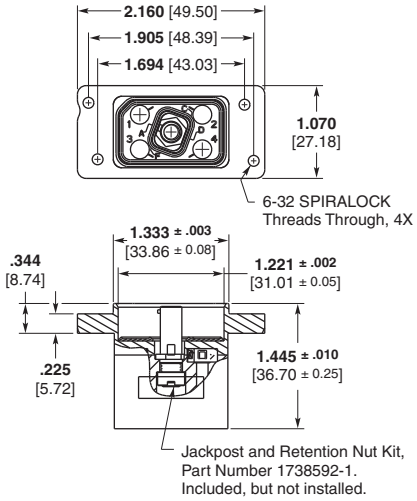

Panel Mount Receptacle
(Part No. 1738950)

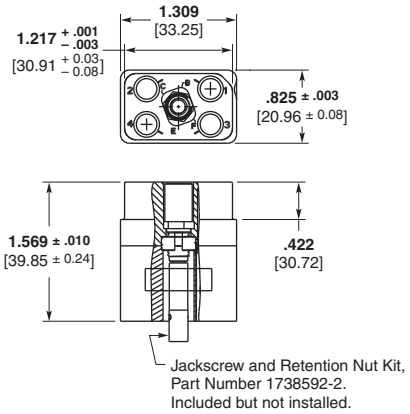

Free-Hanging Plug
(Part No. 1738951)

12 Position

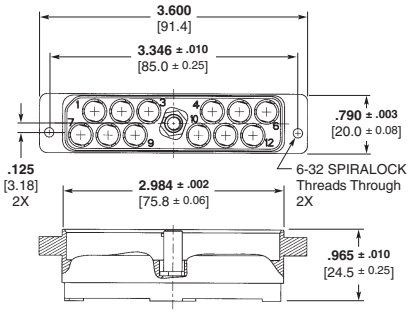

PCB Mount Receptacle
(Part No. 1604798)

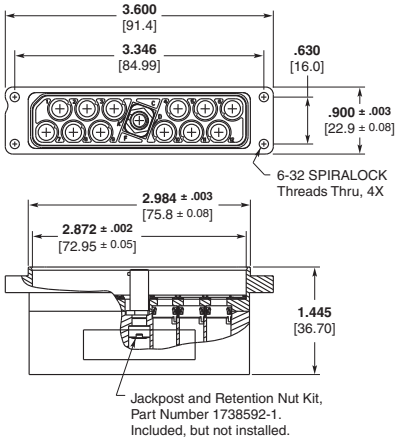

Panel Mount Receptacle
(Part No. 1604799)

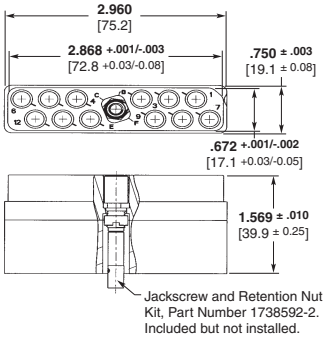

Free-Hanging Plug
(Part No. 1604800)

SPIRALOCK is a trademark of
Detroit Tool Industries Corporation.

Rectangular Connectors (Continued)

Accessories

2 Position Low Profile Seal Retainer
Part No. 2101752-1

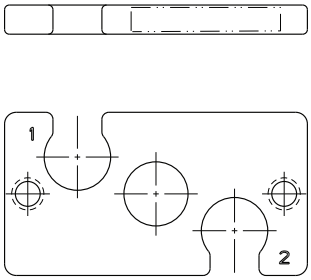

ORIENTATION OF BOOT SEAL PLATE FOR PLUG APPLICATION

4 Position Low Profile Seal Retainer
Part No. 2157322-1

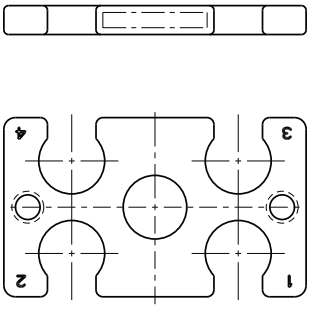

ORIENTATION OF BOOT SEAL PLATE FOR PLUG APPLICATION

12 Position Backshell/Strain Relief Kit
Part No. 1996373-1 for receptacle;
Part No. 1996373-2 for plug

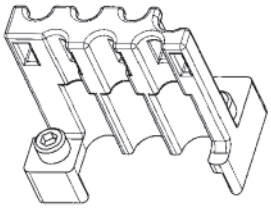

12 Position Low Profile Seal Retainer
Part No. 1996544-2

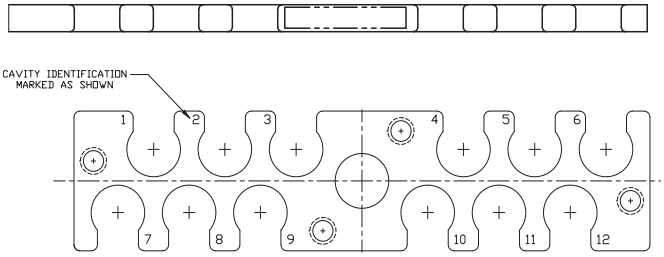

ORIENTATION OF SEAL BOOT PLATE FOR PLUG APPLICATIONS

Wrench, Retention Nut, Jackscrew and Jackpost, Quadrax Rectangular Connector
Part No. 1604972-1

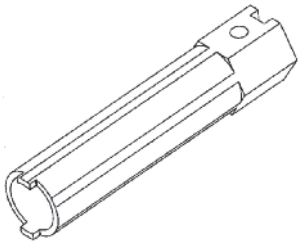

Wrench, Retention Nut, T-handle Tool
Part No. 1950030-1

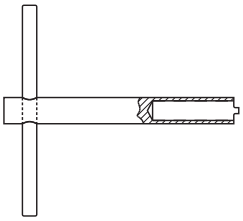

Dimensions are shown for reference purposes only. Specifications subject to change.

Dimensions are in millimeters unless otherwise specified.

USA: +1 800 522 6752
Asia Pacific: +86 0 400 820 6015
UK: +44 800 267 666

For additional support numbers please visit www.te.com

Rectangular Connectors (Continued)

Low Profile Rectangular Connector Assemblies

Product Facts

- **Designed to provide a ruggedized in-line solution for Quadrax cable to printed circuit board mount applications, in a blind-mateable D-subminiature configuration**
- **Quadrax contacts ground directly to connector shell**

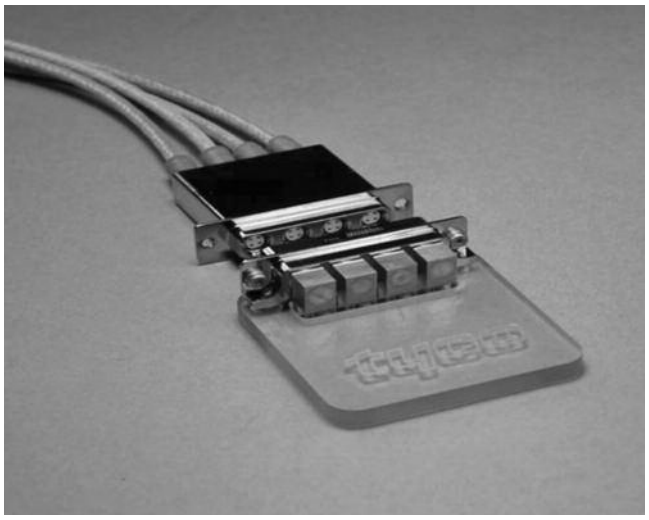

4Q4

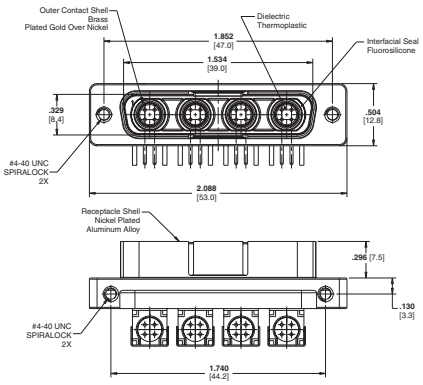

Right Angle PCB Mount Receptacle
(Part No. 2000314)

Accepts standard AMPLIMITE Boardlock Hardware (sold separately).

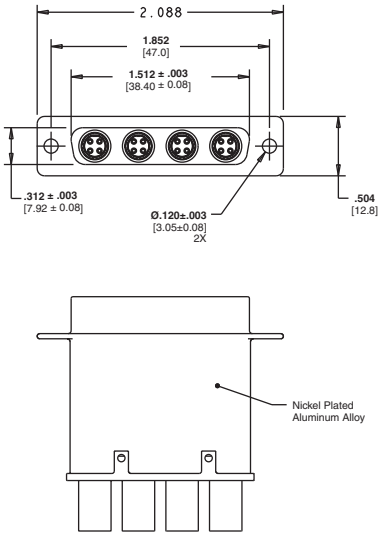

Panel-Mount or Free-Hanging Plug Kit
(Part No. 2000317)

Socket Contacts included in Kit.
Accepts standard AMPLIMITE Screwlock Hardware (sold separately).

Female Screwlock
Part No. 212447-1

Nut Driver Part No. 811262-1

For assembling female screwlocks to connector flange.

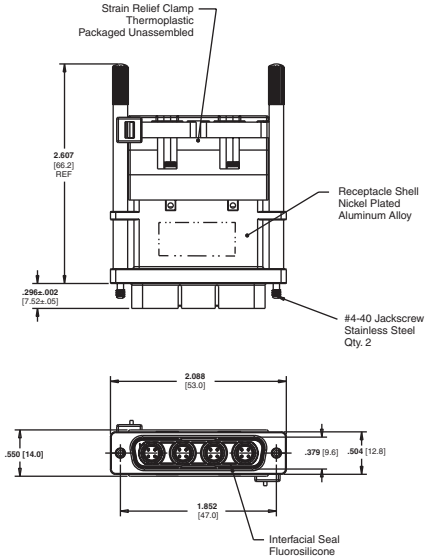

Free-Hanging Receptacle Kit
(Part No. 2000263)

Jackscrews, Strain Relief, and Crimp Pin Contacts included in kit.

Catalog 1308940
Revised 9-14

www.te.com

Dimensions are shown for reference purposes only. Specifications subject to change.

Dimensions are in millimeters unless otherwise specified.

USA: +1 800 522 6752
Asia Pacific: +86 0 400 820 6015
UK: +44 800 267 666

For additional support numbers please visit www.te.com

Custom MIL-DTL-38999 Series III Style Circular Connectors

Product Facts

- **Available in various shell sizes: 9 (1Q1), 17 (2Q2), 19 (4Q4) and 25 (8Q8)**
- **Designed for use with wire seal boots for sealing and optimized alignment**
- **Front metal-shell design provides a full ground plane**
- **Lightweight composite rear shell available in size 19 for reduced weight**
- **Accepts standard backshells**

Shell Size	Part Number	Type	Description
	1877384	Plug	Single Quadrax, RR-RR
9	1738916	Receptacle	38999 Style, Single Quadrax, FR-FR, Jam Nut Style, with PC Tail Contacts
	1811184	Receptacle	38999 Style, Single Quadrax, FR-FR, PCB Mount with Stand-offs and PC Tail Contacts
	2157694	Receptacle	38999 Style, Single Quadrax, with 1 Contact, FR-FR, Jam Nut Style, Series III
	1877775	Plug	38999 Style, Arrangement 2Q2, RR-RR
17	1877774	Receptacle	38999 Style, Arrangement 2Q2, RR-RR
	2157455	Receptacle	38999 Style, Arrangement 2Q2, FR-FR, PCB Mount
	2157695	Receptacle	38999 Style, with 2 Quadrax Contacts, Arrangement 2Q2, FR-FR, Jam Nut Style, Series III
	1811902	Plug	38999 Style, Arrangement 4Q4, RR-RR
	1738974	Receptacle	38999 Style, with 4 Quadrax Contacts, FR-FR
19	1877732	Receptacle	38999 Style, with 4 Quadrax Contacts, FR-FR, with PC Tail Contacts
	1811901	Receptacle	38999 Style, Arrangement 4Q4, RR-RR
	2157696	Receptacle	38999 Style, with 4 Quadrax Contacts, Arrangement 2Q2, FR-FR, Jam Nut Style, Series III
21	1954355	Plug	38999 Style, Arrangement 4Q4, FR-FR, Series III
	1954353	Receptacle	38999 Style, Arrangement 4Q4, FR-FR, Series III, with PC Tail Contacts
23	1877921	Plug	38999 Style, Arrangement 6Q6, Series III
	1954577	Receptacle	38999 Style, Arrangement 6Q6, Series III
25	1811928	Plug	38999 Style, Arrangement 8Q8, RR-RR
	1811927	Receptacle	38999 Style, Arrangement 8Q8, RR-RR
	2101395	Receptacle	38999 Style, Arrangement 8Q8, FR-FR, with PC Tail Contacts

See TE Customer Drawing for finish options

Plug, Shell Size 9
Single Quadrax, RR-RR
Part No. 1877384

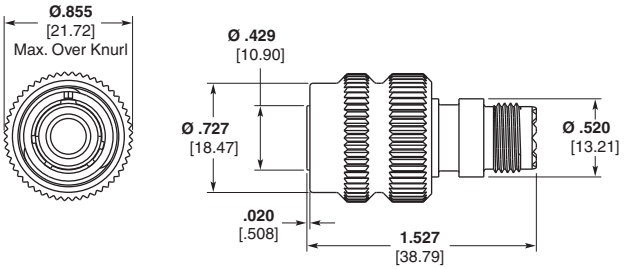

Receptacle, Shell Size 9,
38999 Style
Single Quadrax, FR-FR
Jam Nut Style
Part No. 1738916

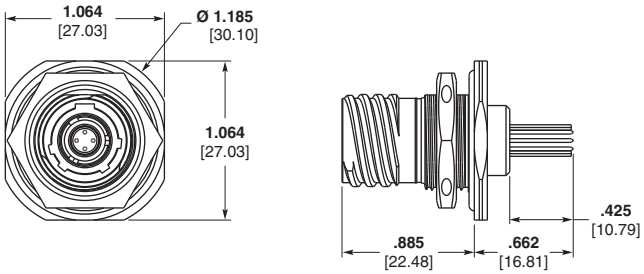

Contacts sold separately (unless noted) see page 6-16

Dimensions are shown for reference purposes only. Specifications subject to change.

Dimensions are in millimeters unless otherwise specified.

USA: +1 800 522 6752
Asia Pacific: +86 0 400 820 6015
UK: +44 800 267 666

For additional support numbers please visit www.te.com

Custom MIL-DTL-38999 Series III Style Circular Connectors (Continued)

Receptacle, Shell Size 9,
38999 Style
Single Quadrax, FR-FR
PCB Mount with Stand-offs

Part No. 1811184
(with PC tail contacts)

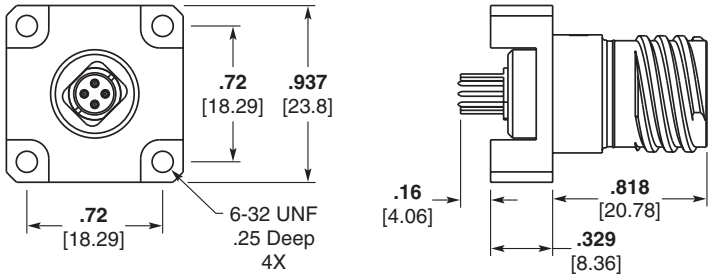

Receptacle, Shell Size 9
38999 Style
Single Quadrax, FR-FR
Jam Nut Style
Part No. 2157694

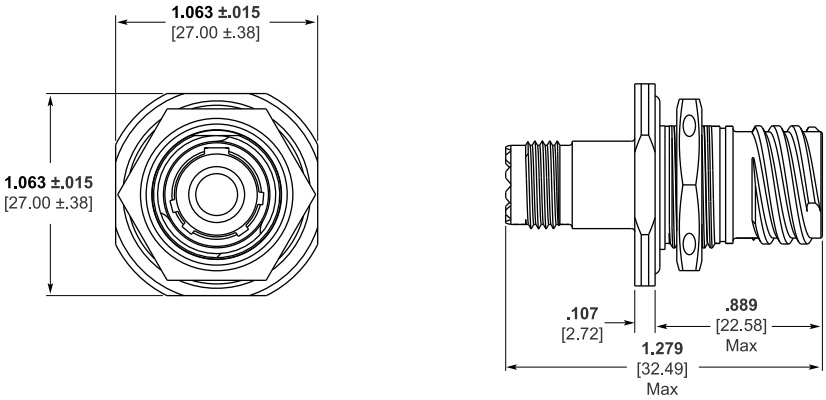

Plug, Shell Size 17,
38999 Style
Arrangement 2Q2, RR-RR
Part No. 1877775

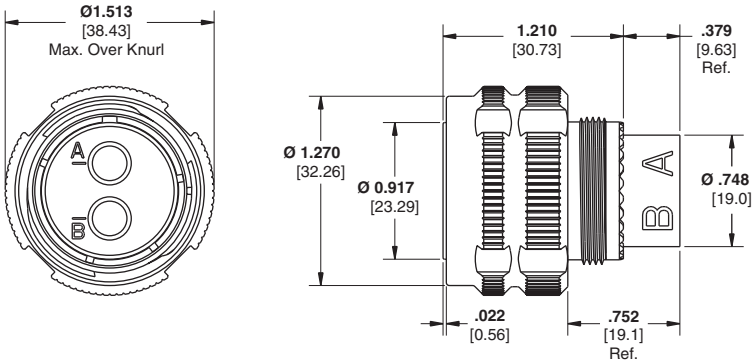

Receptacle, Shell Size 17
38999 Style
Arrangement 2Q2, RR-RR
Part No. 1877774

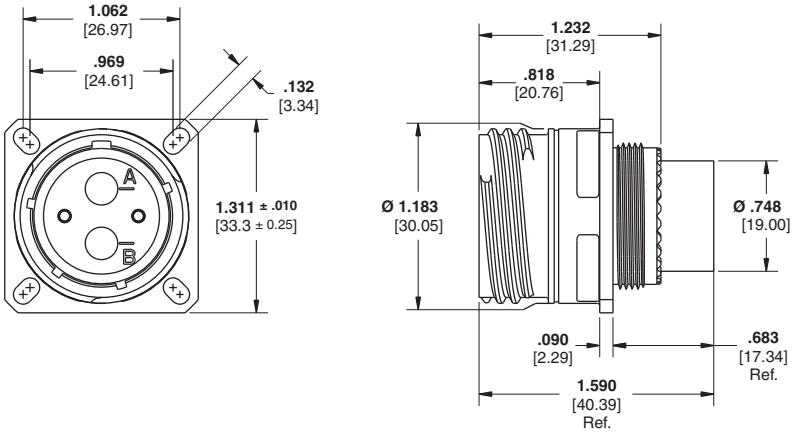

Contacts sold separately
(unless noted) see page 6-16

Catalog 1308940
Revised 9-14

www.te.com

Dimensions are shown for reference purposes only. Specifications subject to change.

Dimensions are in millimeters unless otherwise specified.

USA: +1 800 522 6752
Asia Pacific: +86 0 400 820 6015
UK: +44 800 267 666

For additional support numbers please visit www.te.com

Custom MIL-DTL-38999 Series III Style Circular Connectors (Continued)

Receptacle, Shell Size
1738999 Style
Arrangement 2Q2, FR-FR
Part No. 2157455

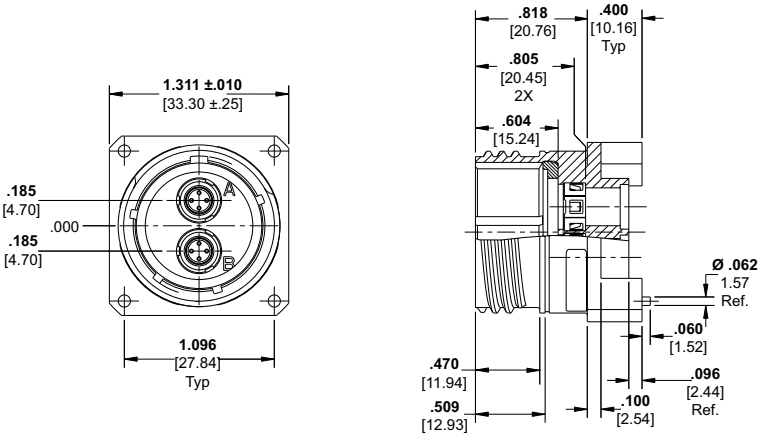

Receptacle, Shell Size
1738999 Style
Arrangement 2Q2, FR-FR
Jam Nut Style
Part No. 2157695

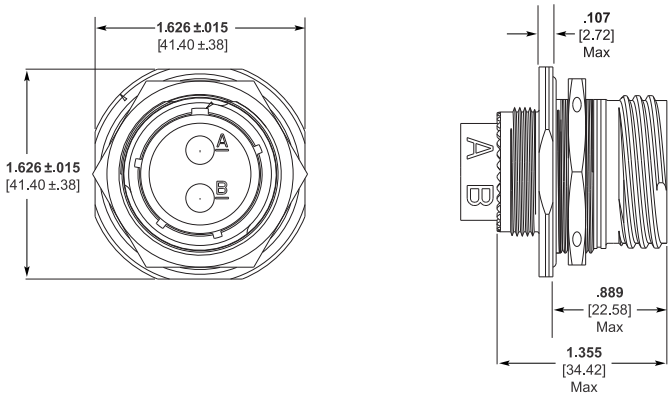

Plug, Shell Size 19
38999 Style
Arrangement 4Q4, RR-RR
Part No. 1811902

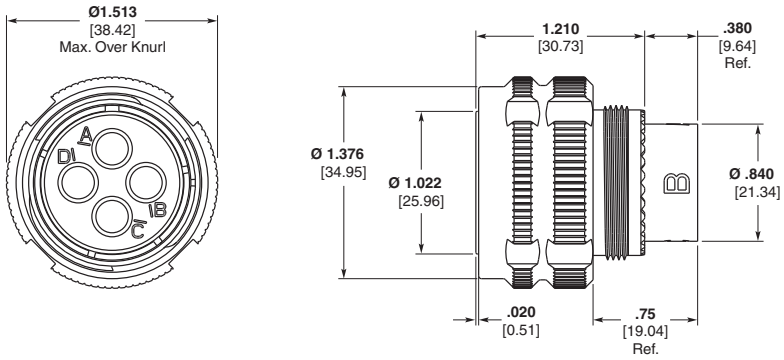

Receptacle, Shell Size 19,
38999 Style w/4 Quadrax
Contacts, FR-FR

Part No. 1877732
(w/ PC Tail Contacts)

Part No. 1738974
(connector only)

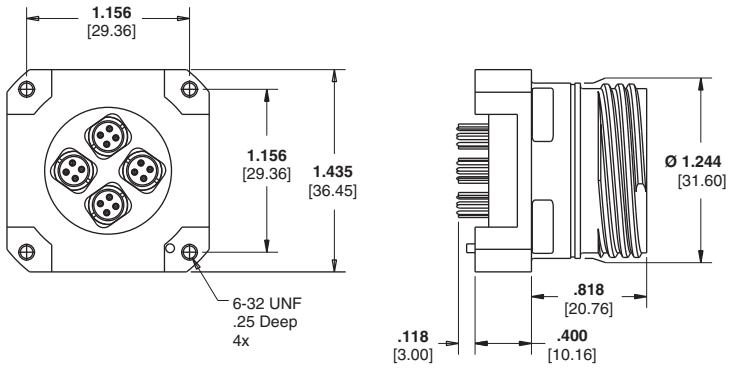

Contacts sold separately
(unless noted) see page 6-16

Dimensions are shown for reference purposes only. Specifications subject to change.

Dimensions are in millimeters unless otherwise specified.

USA: +1 800 522 6752
Asia Pacific: +86 0 400 820 6015
UK: +44 800 267 666

For additional support numbers please visit www.te.com

Custom MIL-DTL-38999 Series III Style Circular Connectors (Continued)

Receptacle, Shell Size 19,
38999 Style
Arrangement 4Q4, RR-RR
Part No. 1811901

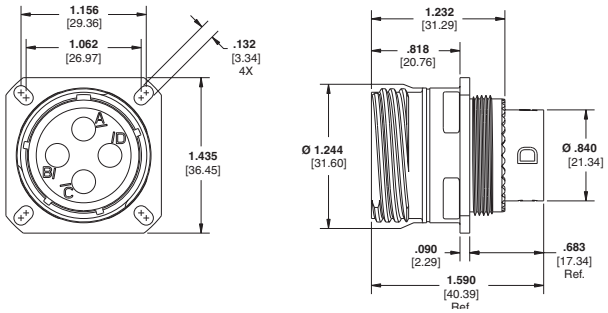

Receptacle, Shell Size
1938999 Style
Arrangement 4Q4, FR-FR
Jam Nut Style
Part No. 2157696

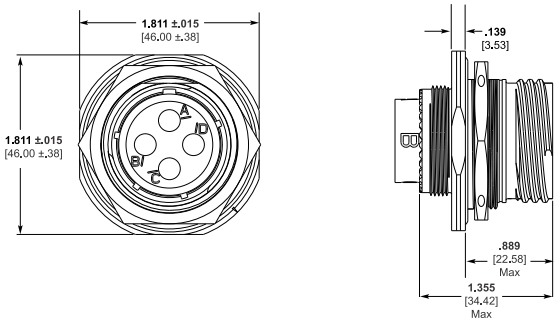

Plug, Shell Size 21,
38999 Style
Arrangement 4Q4, FR-FR
Series III
Part No. 1954355

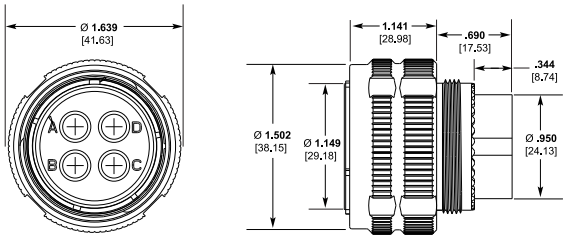

Receptacle, Shell Size 21,
38999 Style
Arrangement 4Q4, FR-FR
Series III
Part No. 1954353

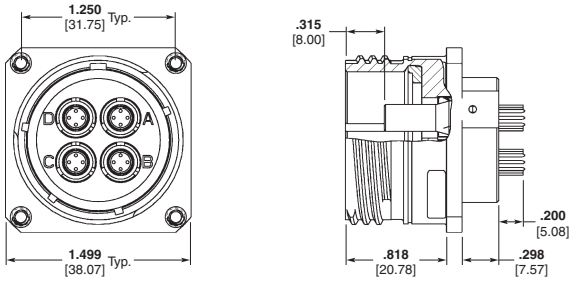

Plug, Shell Size 23,
38999 Style
Arrangement 6Q6,
Series III
Part No. 1877921

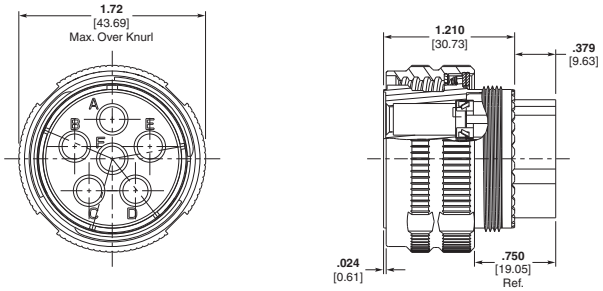

Contacts sold separately
(unless noted) see page 6-16

Dimensions are shown for reference purposes only. Specifications subject to change.

Dimensions are in millimeters unless otherwise specified.

USA: +1 800 522 6752
Asia Pacific: +86 0 400 820 6015
UK: +44 800 267 666

For additional support numbers please visit www.te.com

Custom MIL-DTL-38999 Series III Style Circular Connectors (Continued)

Receptacle, Shell Size 23, M38999 Style Arrangement 6Q6, Series III Part No. 1954577

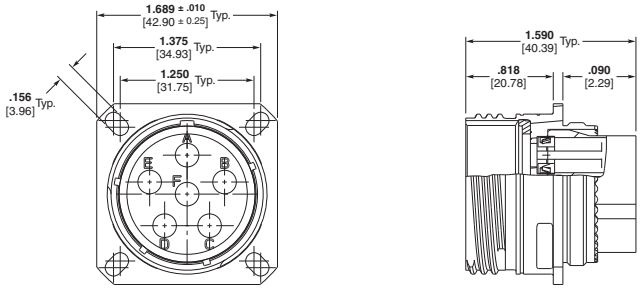

Plug, Shell Size 25 38999 Style Arrangement 8Q8, RR-RR Part No. 1811928

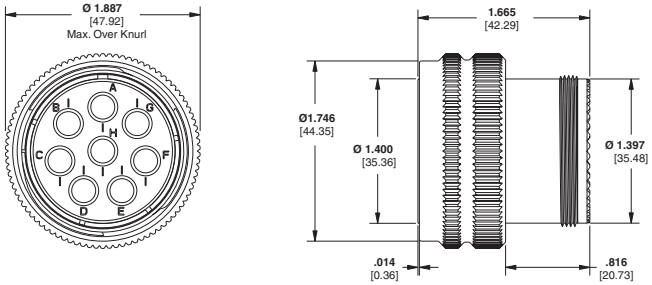

Receptacle, Shell Size 25 38999 Style Arrangement 8Q8, RR-RR Part No. 1811927

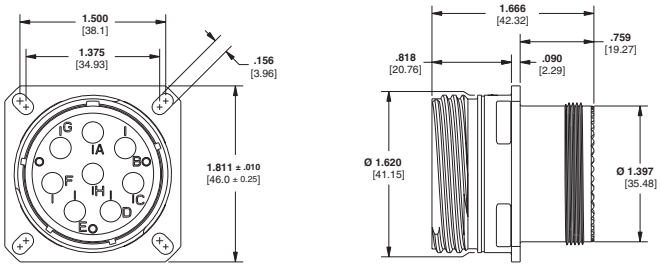

Receptacle, Shell Size 25 38999 Style Arrangement 8Q8, FR-FR Part No. 2101395 (w/ PC Tail Contacts)

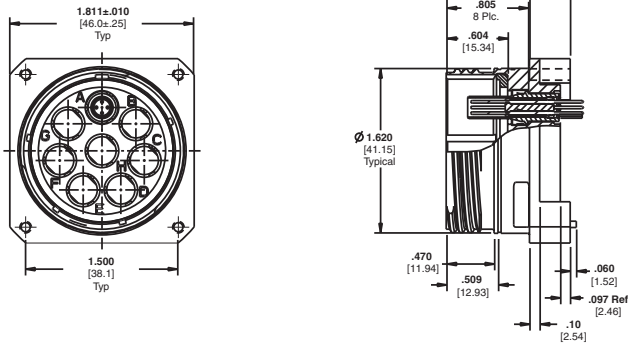

Receptacle, Shell Size 25 38999 Style Arrangement 8Q8 Jam Nut Part No. 2157628

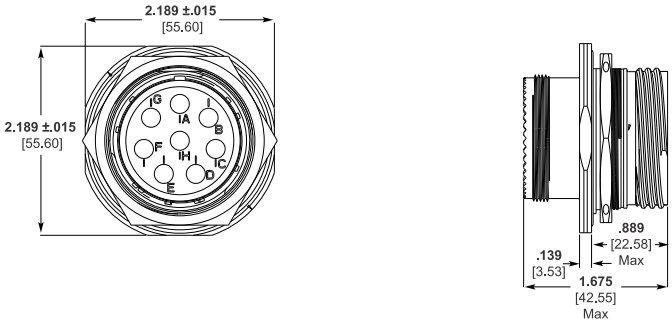

Contacts sold separately (unless noted) see page 6-16

QUADLITE Quadraxial Cables

Product Facts

- **100 ohm and 150 ohm cables**
- **Materials rated from -65˚C to +200˚C**
- **Low outgassing materials (PTFE, FEP)**
- **Custom design capabilities**
- **Proven technologies and materials**
- **Lightweight**
- **Low smoke and low toxicity**
- **Available in 150˚C and 200˚C rated construction**

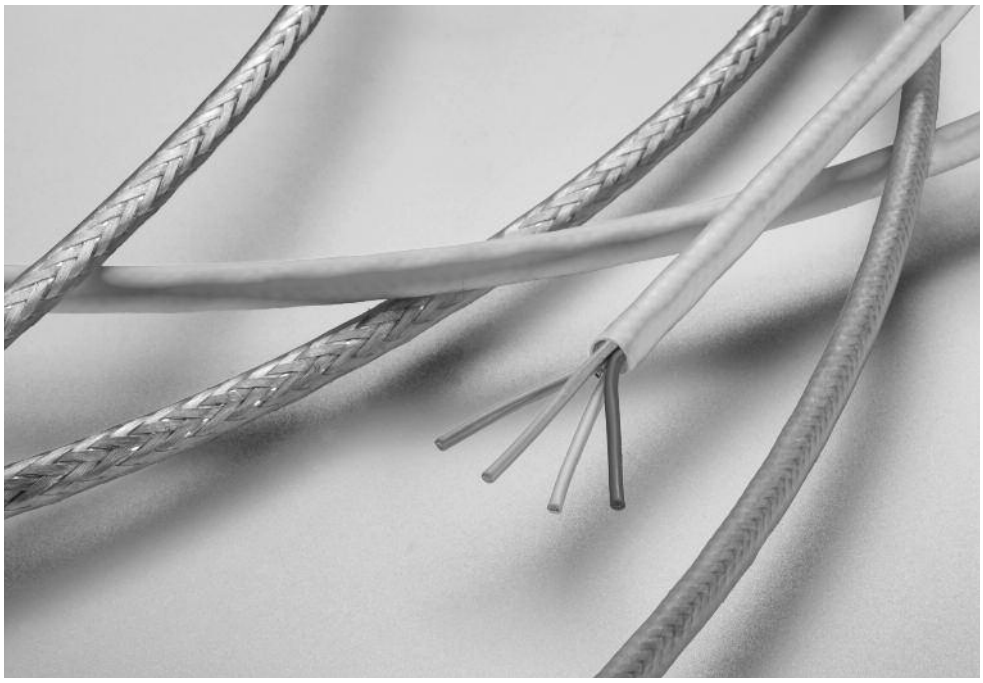

TE's Quadlite family of lightweight, fluoropolymer cables are for use in high speed, high bandwidth applications such as 100Base-T, Gigabit Ethernet, IEEE 1394 and Fiber Channel employed in commercial avionics systems, aircraft data networks, in-flight entertainment systems and military communications.

The Quadlite cables are designed to meet the flammability requirements of FAR Part 25 and the rigorous smoke and toxicity requirements found in commercial aerospace standards such as EN3475.

Quadlite cables are to be used with the Quadrax contacts and connectors.

Applications

Cables are used in communications, control and instrumentation for:

- In-Flight Entertainment
- Satellite TV
- Flight Subsystems
- Military Communications

Materials

Dielectrics — Foamed FEP
Jacket — FEP

Standards and Specifications

TE Specification 1200

ANSI/TIA-568-B.2

IEEE 1394

ARINC 664

Catalog 1308940
Revised 9-14

www.te.com

Dimensions are shown for reference purposes only. Specifications subject to change.

Dimensions are in millimeters unless otherwise specified.

USA: +1 800 522 6752
Asia Pacific: +86 0 400 820 6015
UK: +44 800 267 666

For additional support numbers please visit www.te.com

QUADLITE Quadraxial Cables (Continued)

100Base-T Ethernet Cables
100 Ohms - 150˚C

TE Part No.	CEC-RWC-18634	CEC-RWC-18664	CEC-RWC-18666
Conductor AWG Size (19 Strand)	26	24	22
Conductor Material:	SCCA	SCCA	SCC
Nom. Conductor Diameter (in.):	0.0185	0.0235	0.0295
Insulation Material:	Formed FEP	Formed FEP	Formed FEP
Nom. Insulation OD ± 0.002 (in.):	0.037	0.042	0.057
Nom. Cable OD (in.):	0.145	0.154	0.195
Nom. Cable Weight (lb/1 kft):	17.7	20.3	32.0
Shield Material:	TCC	TCC	TCC
Jacket Material:	FEP	FEP	FEP
Impedance ± 10% (Ω):	100	100	100
Temp. Rating:	150˚C	150˚C	150˚C
Nom. Capacitance (pF/ft):	13.5	13.0	12.9
Nom. Attenuation (dB/100 m):			
1 MHz	4.0	2.2	1.6
10 MHz	10.5	6.8	5.9
100 MHz	36.0	24.8	21.0

	10 MHz	100 MHz	10 MHz	100 MHz	10 MHz	100 MHz
Min. NEXT (dB)	50	35	50	35	50	35
Min. SRL (dB)	23	16	23	16	23	16

TE Part No.	CEC-RWC-20555	CEC-RWC-20333
Conductor AWG Size (19 Strand)	26	24
Conductor Material:	SCCA	SCCA
Nom. Conductor Diameter (in.):	0.0185	0.0235
Insulation Material:	Formed FEP	Formed FEP
Nom. Insulation OD ± 0.002 (in.):	0.037	0.042
Nom. Cable OD (in.):	0.144	0.153
Nom. Cable Weight (lb/1 kft):	18.7	22.2
Shield Material:	TCC	TCC
Jacket Material:	FEP	FEP
Impedance ± 10% (Ω):	100	100
Temp. Rating:	150˚C	150˚C
Nom. Capacitance (pF/ft):	13.5	13.0
Nom. Attenuation (dB/100 m):		
1 MHz	4.0	2.2
10 MHz	10.5	6.8
100 MHz	36.0	24.8

	10 MHz	100 MHz	10 MHz	100 MHz
Min. NEXT (dB)	50	35	50	35
Min. SRL (dB)	23	16	23	16

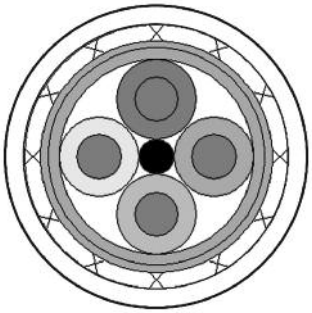

100Base-T Ethernet

Catalog 1308940
Revised 9-14

www.te.com

Dimensions are shown for reference purposes only. Specifications subject to change.

Dimensions are in millimeters unless otherwise specified.

USA: +1 800 522 6752
Asia Pacific: +86 0 400 820 6015
UK: +44 800 267 666

For additional support numbers please visit www.te.com

QUADLITE Quadraxial Cables (Continued)

100Base-T Ethernet Cables
100 Ohms - 200˚C

TE Part No.	CEC-RWC-18658		CEC-RWC-18687		CEC-RWC-18665	
Conductor AWG Size (19 Strand)	26		24		22	
Conductor Material:	SCCA		SCCA		SCC	
Nom. Conductor Diameter (in.):	0.0185		0.0235		0.0295	
Insulation Material:	Formed FEP		Formed FEP		Formed FEP	
Nom. Insulation OD ± 0.002 (in.):	0.037		0.042		0.057	
Nom. Cable OD (in.):	0.144		0.153		0.194	
Nom. Cable Weight (lb/1 kft):	18.7		22.2		34.3	
Shield Material:	SCC		SCC		SCC	
Jacket Material:	FEP		FEP		FEP	
Impedance ± 10% (Ω):	100		100		100	
Temp. Rating:	200˚C		200˚C		200˚C	
Nom. Capacitance (pF/ft):	13.5		13.0		12.9	
Nom. Attenuation (dB/100 m):						
1 MHz	4.0		2.2		1.6	
10 MHz	10.5		6.8		5.9	
100 MHz	36.0		24.8		21.0	
	10 MHz	**100 MHz**	**10 MHz**	**100 MHz**	**10 MHz**	**100 MHz**
Min. NEXT (dB)	50	35	50	35	50	35
Min. SRL (dB)	23	16	23	16	23	16

Catalog 1308940
Revised 9-14

www.te.com

Dimensions are shown for reference purposes only. Specifications subject to change.

Dimensions are in millimeters unless otherwise specified.

USA: +1 800 522 6752
Asia Pacific: +86 0 400 820 6015
UK: +44 800 267 666

For additional support numbers please visit www.te.com

QUADLITE Quadraxial Cables (Continued)

Fiber Channel Cables
150 Ohms - 150˚C

TE Part No.	CEC-RWC-18680	CEC-RWC-18681	CEC-RWC-18682
Conductor AWG Size (19 Strand)	26	24	22
Conductor Material:	SCCA	SCCA	SCC
Nom. Conductor Diameter (in.):	0.0185	0.0235	0.0295
Insulation Material:	Formed FEP	Formed FEP	Formed FEP
Nom. Insulation OD ± 0.002 (in.):	0.058	0.077	0.094
Nom. Cable OD (in.):	0.193	0.224	0.281
Nom. Cable Weight (lb/1 kft):	23.4	38.3	57.2
Shield Material:	TCC	TCC	TCC
Jacket Material:	FEP	FEP	FEP
Impedance ± 10% (Ω):	150	150	150
Temp. Rating:	150˚C	150˚C	150˚C
Nom. Capacitance (pF/ft):	6.0	6.0	6.0
Nom. Attenuation (dB/100 m):			
531 MHz	13	11	9
1062 MHz	21	17	13

150 Ohms - 200˚C

TE Part No.	CEC-RWC-18684	CEC-RWC-18685	CEC-RWC-18686
Conductor AWG Size (19 Strand)	26	24	22
Conductor Material:	SCCA	SCCA	SCC
Nom. Conductor Diameter (in.):	0.0185	0.0235	0.0295
Insulation Material:	Formed FEP	Formed FEP	Formed FEP
Nom. Insulation OD ± 0.002 (in.):	0.058	0.077	0.094
Nom. Cable OD (in.):	0.192	0.247	0.284
Nom. Cable Weight (lb/1 kft):	25.8	38.3	57.2
Shield Material:	SCC	SCC	SCC
Jacket Material:	FEP	FEP	FEP
Impedance ± 10% (Ω):	150	150	150
Temp. Rating:	200˚C	200˚C	200˚C
Nom. Capacitance (pF/ft):	6.0	6.0	6.0
Nom. Attenuation (dB/100 m):			
531 MHz	13	11	9
1062 MHz	21	17	13

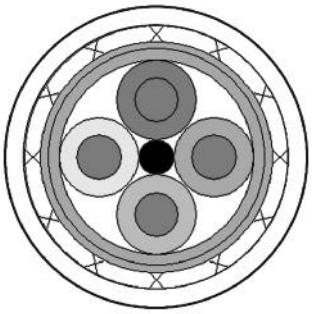

Fiber Channel

Dimensions are shown for reference purposes only. Specifications subject to change.

Dimensions are in millimeters unless otherwise specified.

USA: +1 800 522 6752
Asia Pacific: +86 0 400 820 6015
UK: +44 800 267 666

For additional support numbers please visit www.te.com

QUADLITE Quadraxial Cables (Continued)

4-Pair Cat 5E Constructions
100 Ohms - 150˚C/200˚C

TE Part No.	CEC-RWC-20412	CEC-RWC-21064	CEC-RWC-20638
Conductor AWG Size (19 Strand)	24	24	26 (7 strand)
Conductor Material:	SCHSCA	SCC	SCC
Nom. Conductor Diameter (in.):	0.0235	0.0235	0.019
Insulation Material:	Formed FEP	Formed FEP	Formed FEP
Nom. Insulation OD ± 0.002 (in.):	0.046	0.046	0.036
Nom. Cable OD (in.):	0.279	0.249	0.204
Nom. Cable Weight (lb/1 kft):	46.2	39.5	29.8
Shield Material:	TCC	TCC	SCC
Jacket Material:	FEP	XL-ETFE	FEP
Impedance ± 10% (Ω):	100	100	100
Temp. Rating:	150˚C	150˚C	150˚C
Nom. Capacitance (pF/ft):	13.5	13.5	13.5
Nom. Attenuation (dB/100 m):			
1 MHz	2.4	2.2	2.4
100 MHz	7.5	6.8	8.8
100 MHz	26.4	24.8	30.5

	10 MHz	100 MHz	10 MHz	100 MHz	10 MHz	100 MHz
Min. NEXT (dB)	50	35	50	35	50	35
Min. SRL (dB)	25	19	25	19	23	16

Cat 6 Constructions
100 Ohms - 100˚C/90˚C

TE Part No.	CEC-RWC-20837	CEC-RWC-21088
Conductor AWG Size (19 Strand)	23	23
Conductor Material:	Bare Copper	Bare Copper
Nom. Conductor Diameter (in.):	0.021	0.021
Insulation Material:	Foamed PE	PE
Nom. Insulation OD ± 0.002 (in.):	0.046	0.046
Nom. Cable OD (in.):	0.350	0.249
Nom. Cable Weight (lb/1 kft):	52.6	39.5
Shield Material:	TCC	TCC
Jacket Material:	FDR-25	Raythane
Impedance ± 10% (Ω):	100	100
Temp. Rating:	100˚C	100˚C
Nom. Capacitance (pF/ft):	13.5	13.5
Nom. Attenuation (dB/100 m):		
1 MHz	1.8	1.8
100 MHz	5.5	5.5
100 MHz	18.3	18.3
250 MHz	30.4	30.4

	10 MHz	250 MHz	10 MHz	250 MHz
Min. NEXT (dB)	70	52	70	52
Min. SRL (dB)	36	24	36	24

Dimensions are shown for reference purposes only. Specifications subject to change.

Dimensions are in millimeters unless otherwise specified.

USA: +1 800 522 6752
Asia Pacific: +86 0 400 820 6015
UK: +44 800 267 666

For additional support numbers please visit www.te.com

Custom Solutions

Spacecraft Applications

Product Facts

- **Quadrax contacts and QUADLITE cables meet ASTM E595 outgassing limits for spacecraft applications**

Custom Cable and Flex Assemblies

Product Facts

- **Quadrax contacts and connectors can be provided as custom cable and flex assemblies for customer specific applications**

General Purpose Rectangular (GPR) Connector Assemblies (See Catalog 1654763)

This product is sold by TE under license from Radiall S.A.

Product Facts

- **Quadrax inserts are available for the rugged, modular General Purpose Rectangular connector, facilitating the mix of high speed signals with a variety of other power, fiber optic, signal, and coax insert configurations in a single connector system**

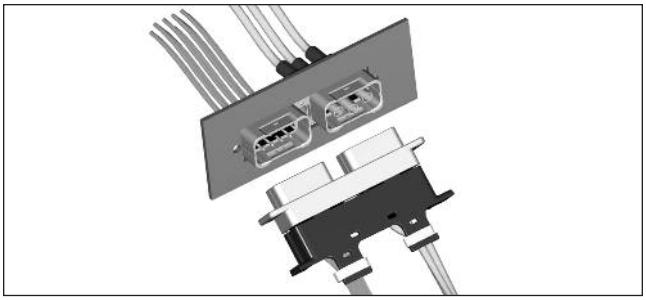

Single Splice Quadrax Part No. 1996500

Product Facts

- **Provides field repairable splicing mechanism**
- **Ideally suited for a Quadrax cable production break where space is limited**

Contact TE for additional information on any of these custom solutions.

Catalog 1308940
Revised 9-14

www.te.com

Dimensions are shown for reference purposes only. Specifications subject to change.

Dimensions are in millimeters unless otherwise specified.

USA: +1 800 522 6752
Asia Pacific: +86 0 400 820 6015
UK: +44 800 267 666

For additional support numbers please visit www.te.com

Table of Contents

Circular HD Connectors
Introduction 7-2
Descriptive Information: Sample of Descriptive Part Number 7-3
Shell Series 1 . . . . . 7-4 to 7-6
Shell Series 2 . . . . . 7-7, 7-8
Shell Series 3 . . . . . 7-9, 7-10
Shell Series 4 . . . . . 7-11 to 7-13
Shell Series 5 . . . . . 7-14 to 7-16
Connector Accessories 7-17
Cross Reference: Descriptive Part Number to TE Part Number 7-18
Metal-Shell Micro Circular Connectors . . . . . 7-19 to 7-24
NANONICS Environmentally Sealed Circular Connectors
Introduction 7-25
Quick Disconnect
Plug Assemblies 7-26, 7-27
Plug Assemblies with Backshells . . . . . 7-28 to 7-31
Receptacle Assemblies, Flush Mount 7-32, 7-33
Threaded Coupling
Plug Assemblies 7-34, 7-35
Plug Assemblies with Backshells . . . . . 7-36 to 7-39
Receptacle Assemblies, Panel Mount 7-40, 7-41
Panel Mount Receptacle Assemblies w/Backshells 7-42, 7-43
Part Numbering Guideline for Environmentally Sealed Circular Connectors 7-43
Thru-hole, Receptacle Assemblies, Vertical Mount 7-44
Part Numbering Guideline for Board Mount Termination Circular Connectors 7-45
Part Number Index Cross Reference 7-46

Catalog 1308940
Revised 9-14

www.te.com

Dimensions are shown for reference purposes only. Specifications subject to change.

Dimensions are in millimeters unless otherwise specified.

USA: +1 800 522 6752
Asia Pacific: +86 0 400 820 6015
UK: +44 800 267 666

For additional support numbers please visit www.te.com

Introduction

Product Facts

- **Five shell body size ranging from 14 mm diameter to 27 mm diameter**
- **Chromate or black chromate finish**
- **Panel-mount receptacles: IP68 rated with potted, solder cup or pcb termination**
- **Cable-attach plugs and receptacles: solder cup termination**
- **Push/pull self-locking mating and unmating**
- **Scoop proof, blindmating**
- **Full range of insert configurations**
  - **Power**
  - **Signal**
  - **Power and signal**
- **Up to 122 signal contacts**
- **Up to 20 A current rating**
- **Multiple keying options**

Technical Documents

Product Specification — 108-127005

Qualification Test Report — 501-127002

Performance Characteristics

Environmental

Temperature Range — -65°C to +125C°

Salt Spray — 96 hr

Temperature Life — 1000 hr at 125°C (wired, mated connectors)

Hydrostatic Pressure — Panel-mount receptacle, IP68, 1 m submersion for 2 hr

Electrical

Low-Level Contact Resistance — See Table 1

Dielectric Withstanding Voltage — See Table 2

Insulation Resistance — 5000 megohms min.

100 megohms min. at elevated temperature (125°C)

Mechanical

Random Vibration — 15 grms between 10-2000 Hz

Mechanical Shock — 50 g half-sine pulse of 3 ms duration

Durability — 1000 mating cycles

Materials

Shells — Chromate- or black chromate-plated brass

Contacts — Gold-plated copper alloy

Dielectric — Thermoplastic, PEEK

Introduction

TE Connectivity Circular HD Connectors offer the ease of push/pull, self-locking mating for I/O applications. The small, high-density connectors have the advantage of blind mating into small spaces that may normally require clearance for hand tightening to mate. The connectors are widely used in military and civilian use, including radio equipment, medical equipment, test equipment, audio and video equipment, data acquisition and industrial control.

Table 1: Contact and Wire Information

Contact Dia. (mm)	Solder Cup Dia. (mm)	Wire Size (Max) AWG	Wire Size (Max) mm²	Contact Resistance (mΩ)	Separation Force (N), Contact Pair
0.5	0.4	28	0.06	21	0.15~0.6
0.7	0.6	24	0.15	21	0.2~0.6
0.9	0.8	22	0.38	5	0.5~1
1.3	1.2	18	0.62	3	0.8~2
1.6	1.8	16	2.0	2.5	0.5~2
2.0	2.0	14	2.0	2	1~3
2.3	2.1	12	3.0	1.5	2~3
3.0	3.1	10	5.0	1	4~7

Table 2: Insert Dielectric Withstanding Voltage

Insert Configuration	VAC @ Height: Sea Level	VAC @ Height: 70,000 ft (21,336 m)
I	1000	250
II	875	225
III	725	175

Catalog 1308940
Revised 9-14

www.te.com

Dimensions are shown for reference purposes only. Specifications subject to change.

Dimensions are in millimeters unless otherwise specified.

USA: +1 800 522 6752
Asia Pacific: +86 0 400 820 6015
UK: +44 800 267 666

For additional support numbers please visit www.te.com

Descriptive Information: Sample of Descriptive Part Number

Shell Size	Shell Finish	Connector Type/ Gender	Insert Layout	Contact Layout	Keying Options
3	B	p	053	1	1

Shell Size Series

1
2
3
4
5

Shell Finish

B Black Chromate
N Natural Chromate

Connector Type/Gender

P Plug, Cable Attach
R Receptacle, Cable Attach
A Receptacle, Panel Mount, Wire Attach
B Receptacle, Panel Mount, Board-Mount

Insert Layout

See Individual Shell Size Series Pages for Insert Layout Code

Contact Layout

1 – Receptacle with Sockets
2 – Plug with Pins
3 – Receptacle with Pins
4 – Plug with Sockets

Keying Options

1 – Single Key
2 – Double Key
3 – Triple Key

Catalog 1308940
Revised 9-14

www.te.com

Dimensions are shown for reference purposes only. Specifications subject to change.

Dimensions are in millimeters unless otherwise specified.

USA: +1 800 522 6752
Asia Pacific: +86 0 400 820 6015
UK: +44 800 267 666

For additional support numbers please visit www.te.com

Shell Series 1

Free-Hanging Cable-Attach Plug

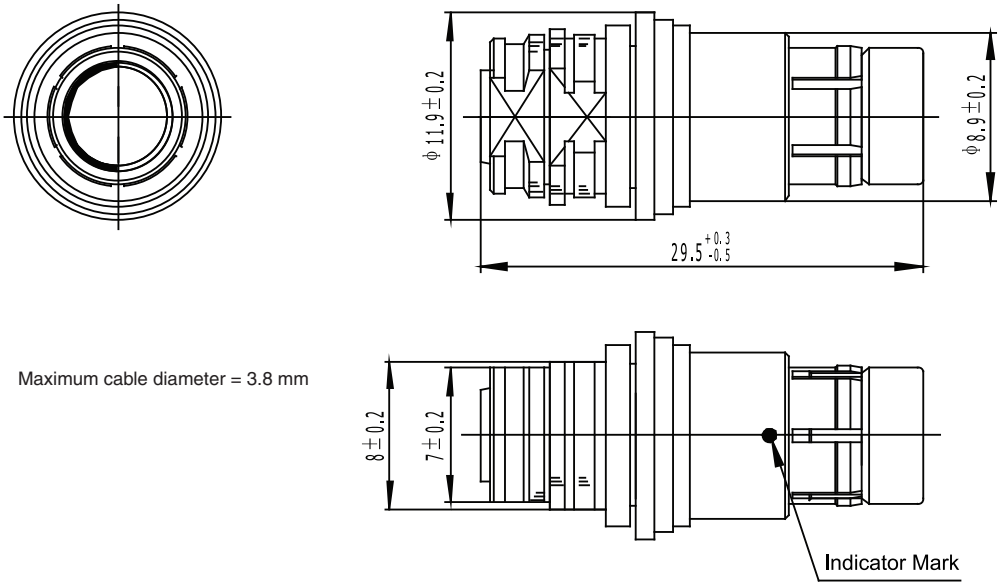

Maximum cable diameter = 3.8 mm

Panel-Mount Wire Termination Receptacle

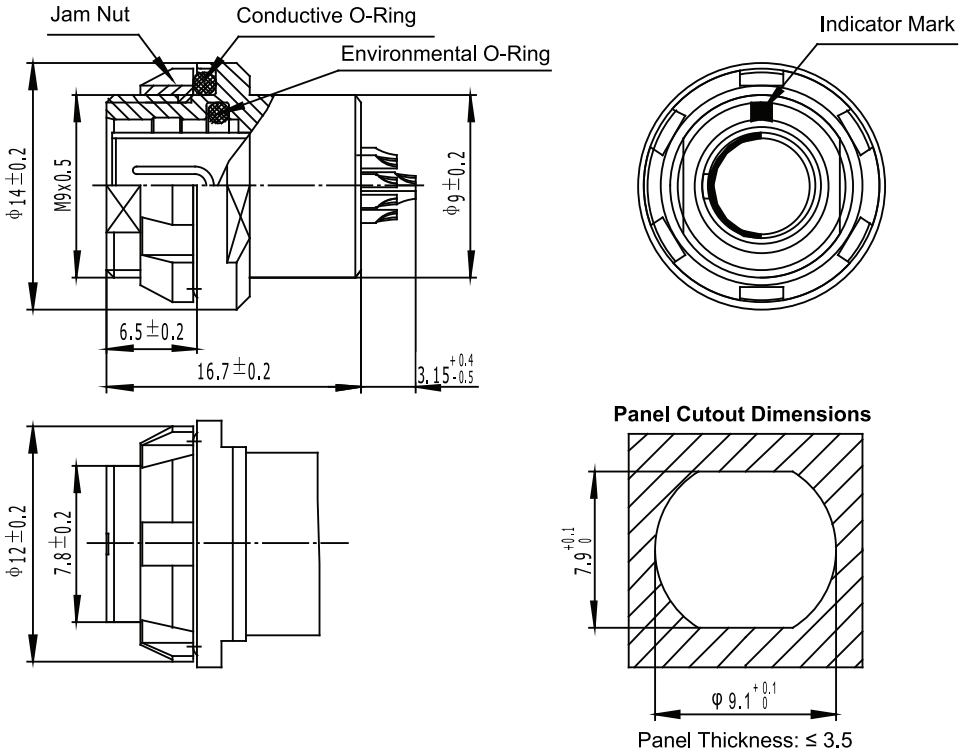

Catalog 1308940
Revised 9-14

www.te.com

Dimensions are shown for reference purposes only. Specifications subject to change.

Dimensions are in millimeters unless otherwise specified.

USA: +1 800 522 6752
Asia Pacific: +86 0 400 820 6015
UK: +44 800 267 666

For additional support numbers please visit www.te.com

Shell Series 1 (Continued)

Panel-Mount, Board-Mount Receptacle

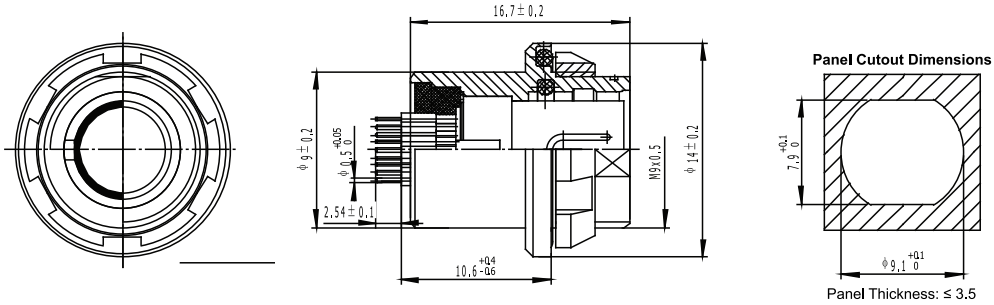

Note: Available for 0.5, 0.7, and 0.9-mm-dia contacts

Free-Hanging Cable-Attach Receptacle

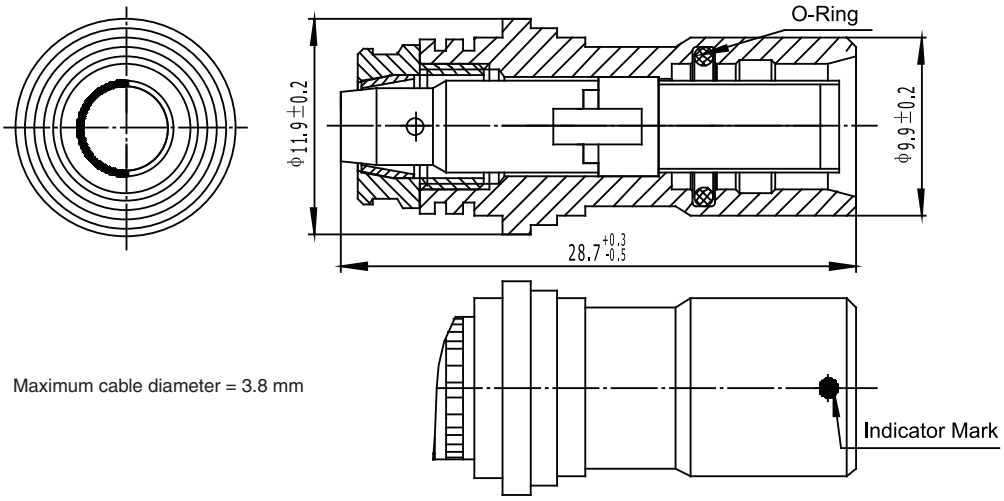

Maximum cable diameter = 3.8 mm

Dimensions are shown for reference purposes only. Specifications subject to change.

Dimensions are in millimeters unless otherwise specified.

USA: +1 800 522 6752
Asia Pacific: +86 0 400 820 6015
UK: +44 800 267 666

For additional support numbers please visit www.te.com

Shell Series 1 Contact Arrangements

Contact Arrangement

Receptacle (A) Socket Contacts	Plug (B) Pin Contacts	Receptacle (A) Pin Contacts	Plug (B) Socket Contacts	Layout Code	No. of Contacts (Contact Dia.)	Current Rating (A)	DWV*
				051	2 (0.9 mm)	6.3	II
				052	3 (0.9 mm)	5.5	II
				053	4 (0.7 mm)	3.8	III
				054	5 (0.7 mm)	3.6	III
				056	7 (0.5 mm)	1.5	III
				059	9 (0.5 mm)	1.0	III

*Dielectric Withstanding Voltage: See Table 2, page 2

Catalog 1308940
Revised 9-14

www.te.com

Dimensions are shown for reference purposes only. Specifications subject to change.

Dimensions are in millimeters unless otherwise specified.

USA: +1 800 522 6752
Asia Pacific: +86 0 400 820 6015
UK: +44 800 267 666

For additional support numbers please visit www.te.com

Shell Series 2

Free-Hanging Cable-Attach Plug

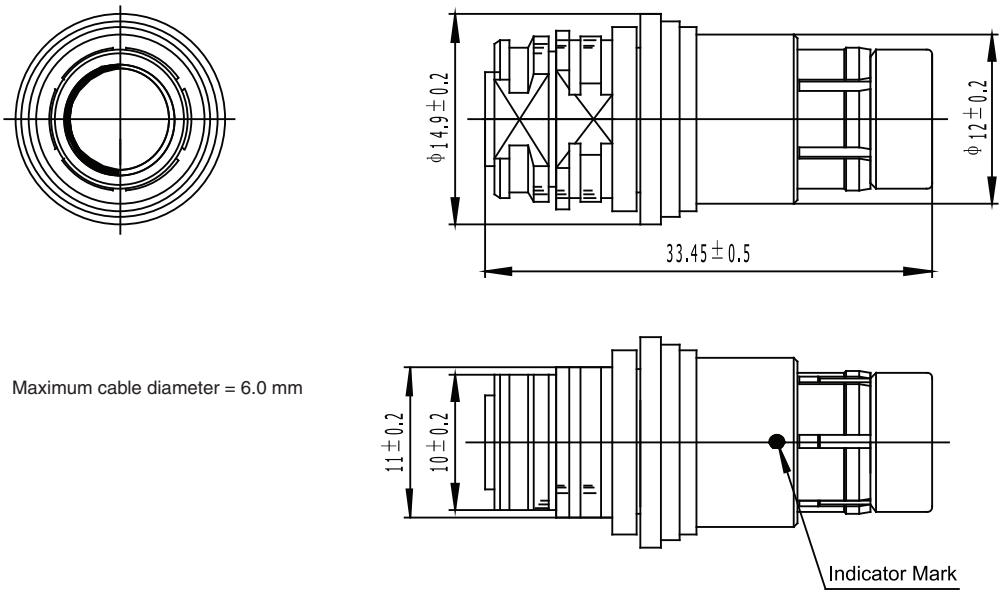

Maximum cable diameter = 6.0 mm

Panel-Mount Wire Termination Receptacle

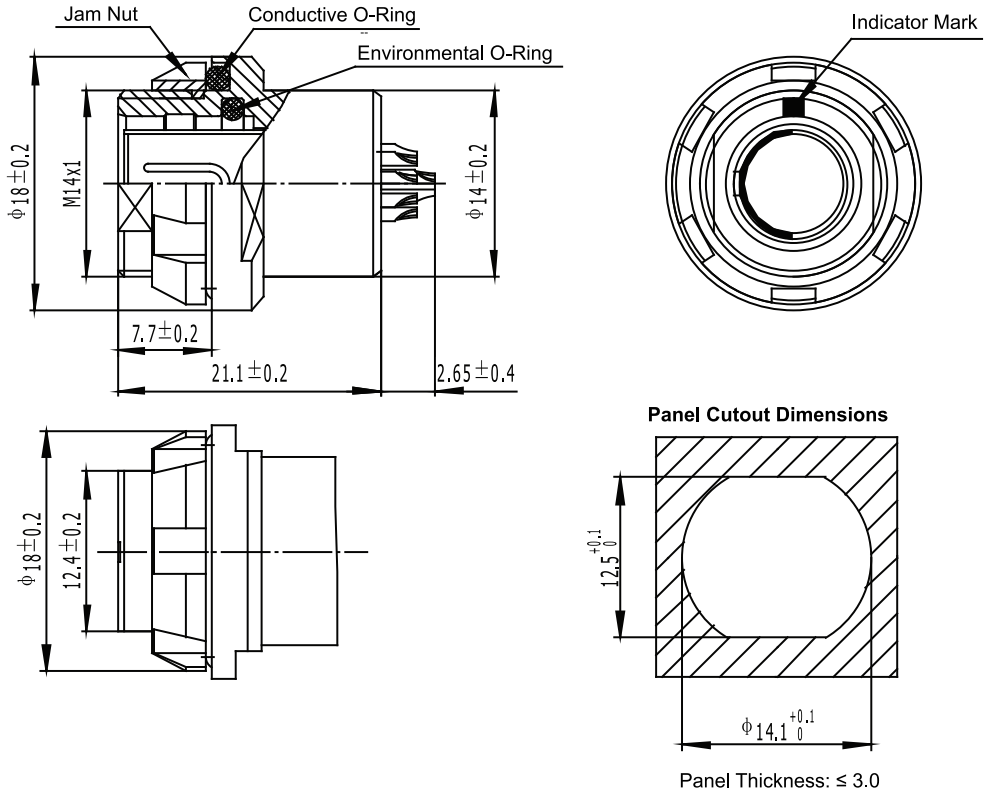

Catalog 1308940
Revised 9-14

www.te.com

Dimensions are shown for reference purposes only. Specifications subject to change.

Dimensions are in millimeters unless otherwise specified.

USA: +1 800 522 6752
Asia Pacific: +86 0 400 820 6015
UK: +44 800 267 666

For additional support numbers please visit www.te.com

Shell Series 2 (Continued)

Panel-Mount, Board-Mount Receptacle

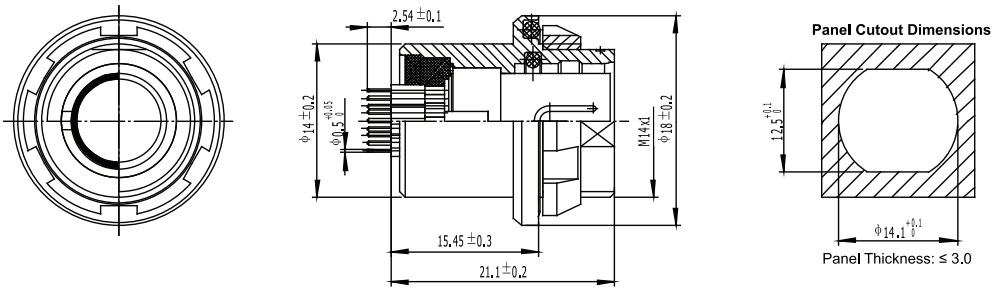

Note: Available for 0.5, 0.7, and 0.9-mm-dia contacts

Contact Arrangement

Receptacle (A) Socket Contacts	Plug (B) Pin Contacts	Receptacle (A) Pin Contacts	Plug (B) Socket Contacts	Layout Code	No. of Contacts (Contact Dia.)	Current Rating (A)	DWV*
				051	2 (1.3 mm)	9	I
				052	3 (1.3 mm)	8.5	I
				053	4 (0.9 mm)	5.0	II
				054	5 (0.9 mm)	4.8	II
				056	6 (0.7 mm)	3.5	II
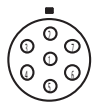				057	7 (0.7 mm)	3.2	II
				058	8 (0.7 mm)	2.5	III
				062	12 (0.5 mm)	1.5	III

*Dielectric Withstanding Voltage: See Table 2, page 2

Catalog 1308940
Revised 9-14

www.te.com

Dimensions are shown for reference purposes only. Specifications subject to change.

Dimensions are in millimeters unless otherwise specified.

USA: +1 800 522 6752
Asia Pacific: +86 0 400 820 6015
UK: +44 800 267 666

For additional support numbers please visit www.te.com

Shell Series 3

Free-Hanging Cable-Attach Plug

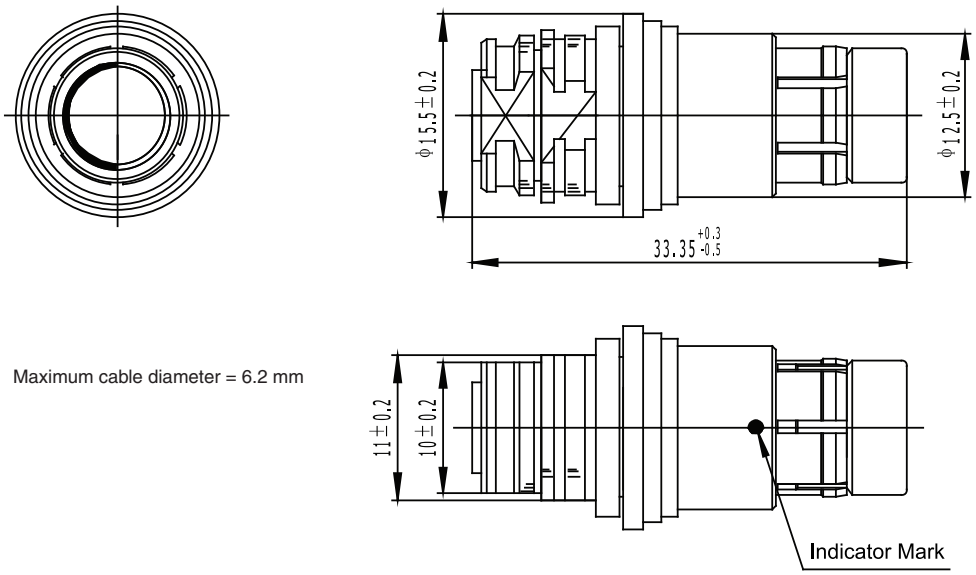

Maximum cable diameter = 6.2 mm

Panel-Mount Wire Termination Receptacle

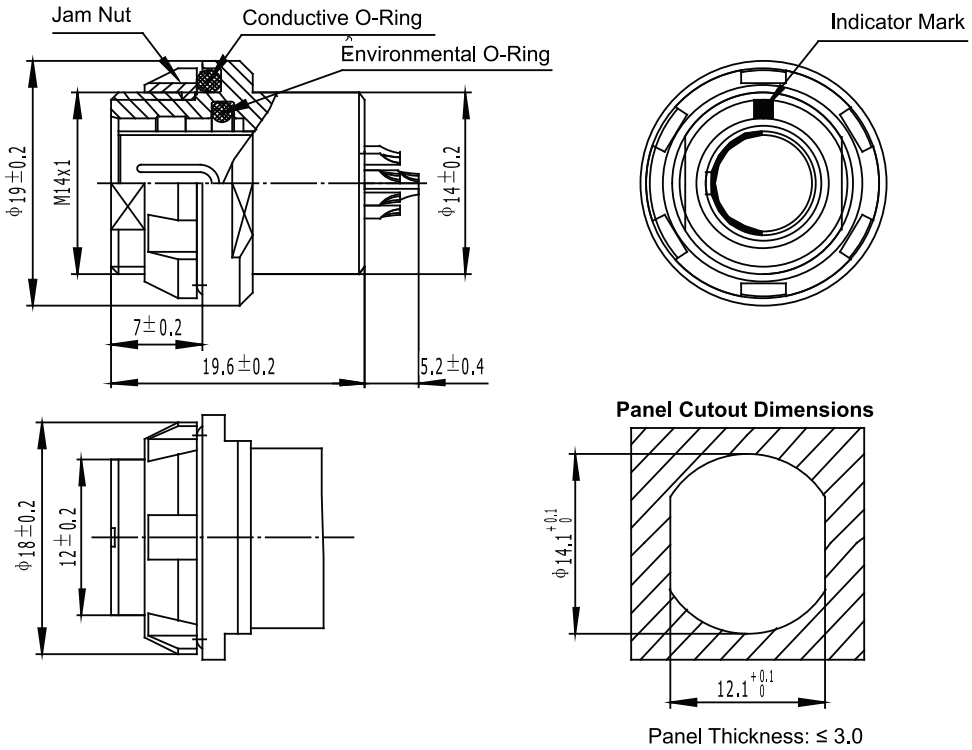

Catalog 1308940
Revised 9-14

www.te.com

Dimensions are shown for reference purposes only. Specifications subject to change.

Dimensions are in millimeters unless otherwise specified.

USA: +1 800 522 6752
Asia Pacific: +86 0 400 820 6015
UK: +44 800 267 666

For additional support numbers please visit www.te.com

Shell Series 3 (Continued)

Panel-Mount, Board-Mount Receptacle

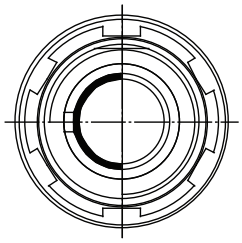

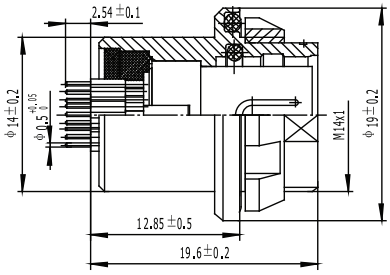

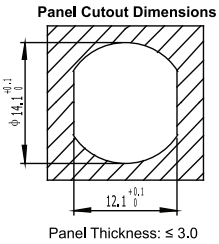

Note: Available for 0.5, 0.7-mm-dia contacts

Free-Hanging Cable-Attach Receptacle

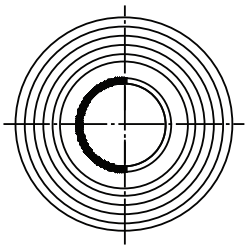

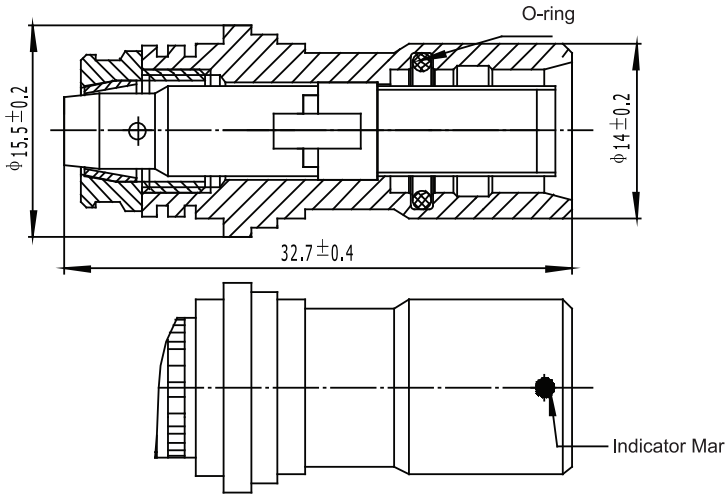

Maximum cable diameter = 6.2 mm

Contact Arrangement

Receptacle (A) Socket Contacts	Plug (B) Pin Contacts	Receptacle (A) Pin Contacts	Plug (B) Socket Contacts	Layout Code	No. of Contacts (Contact Dia.)	Current Rating (A)	DWV*
				010	10 (0.7 mm)	3.2	II
				012	12 (0.7 mm)	3.0	II
				019	19 (0.5 mm)	1.8	III

*Dielectric Withstanding Voltage: See Table 2, page 2

Catalog 1308940
Revised 9-14

www.te.com

Dimensions are shown for reference purposes only. Specifications subject to change.

Dimensions are in millimeters unless otherwise specified.

USA: +1 800 522 6752
Asia Pacific: +86 0 400 820 6015
UK: +44 800 267 666

For additional support numbers please visit www.te.com

Shell Series 4

Free-Hanging Cable-Attach Plug

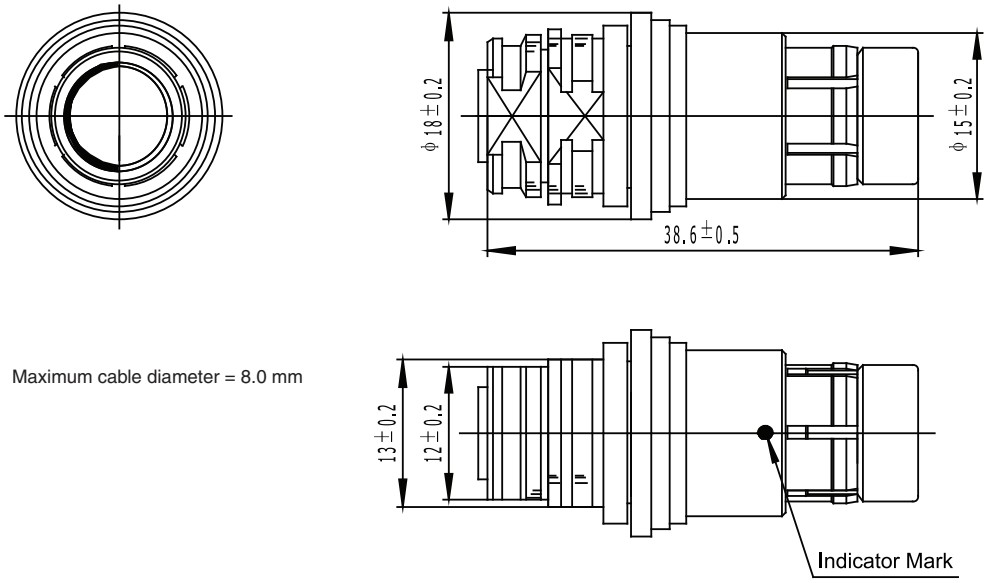

Maximum cable diameter = 8.0 mm

Panel-Mount Wire Termination Receptacle

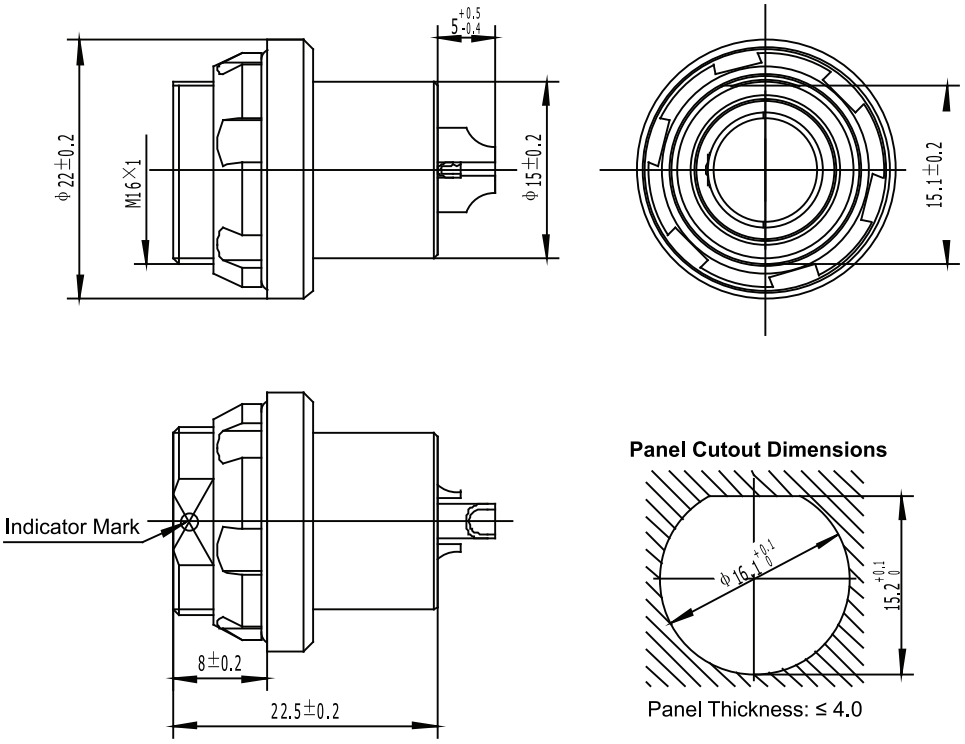

Catalog 1308940
Revised 9-14

www.te.com

Dimensions are shown for reference purposes only. Specifications subject to change.

Dimensions are in millimeters unless otherwise specified.

USA: +1 800 522 6752
Asia Pacific: +86 0 400 820 6015
UK: +44 800 267 666

For additional support numbers please visit www.te.com

Shell Series 4 (Continued)

Panel-Mount, Board-Mount Receptacle

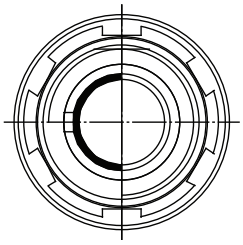

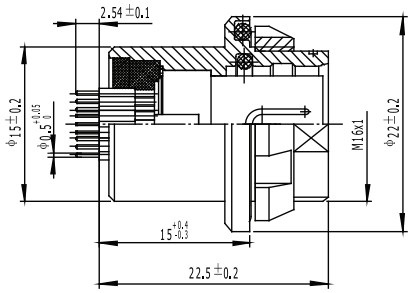

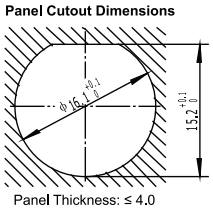

Note: Available for 0.5, 0.7, and 0.9-mm-dia contacts

Shell Series 4 Contact Arrangements

Contact Arrangement

Receptacle (A) Socket Contacts	Plug (B) Pin Contacts	Receptacle (A) Pin Contacts	Plug (B) Socket Contacts	Layout Code	No. of Contacts (Contact Dia.)	Current Rating (A)	DWV*
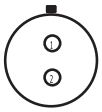		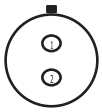		051	2 (1.6 mm)	15	I
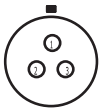		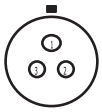		040	3 (1.6 mm)	13	I
				037	4 (1.3 mm)	8	II
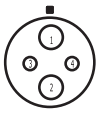	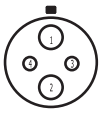		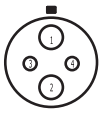	087	2 (2.3 mm) 2 (0.9 mm)	20 2.0	II
				053	5 (1.3 mm)	7.5	II
				065	6 (0.9 mm)	4.5	II
				054	7 (0.9 mm)	4.5	II
				066	8 (0.9 mm)	4.5	II
				055	1 (1.3 mm) 8 (0.9 mm)	8.0 4.0	II
				056	11 (0.9 mm)	4.0	II
				086	16 (0.7 mm)	2.8	III
				092	19 (0.7 mm)	2.5	III

*Dielectric Withstanding Voltage: See Table 2, page 2

Catalog 1308940
Revised 9-14

www.te.com

Dimensions are shown for reference purposes only. Specifications subject to change.

Dimensions are in millimeters unless otherwise specified.

USA: +1 800 522 6752
Asia Pacific: +86 0 400 820 6015
UK: +44 800 267 666

For additional support numbers please visit www.te.com

Shell Series 5

Free-Hanging Cable-Attach Plug

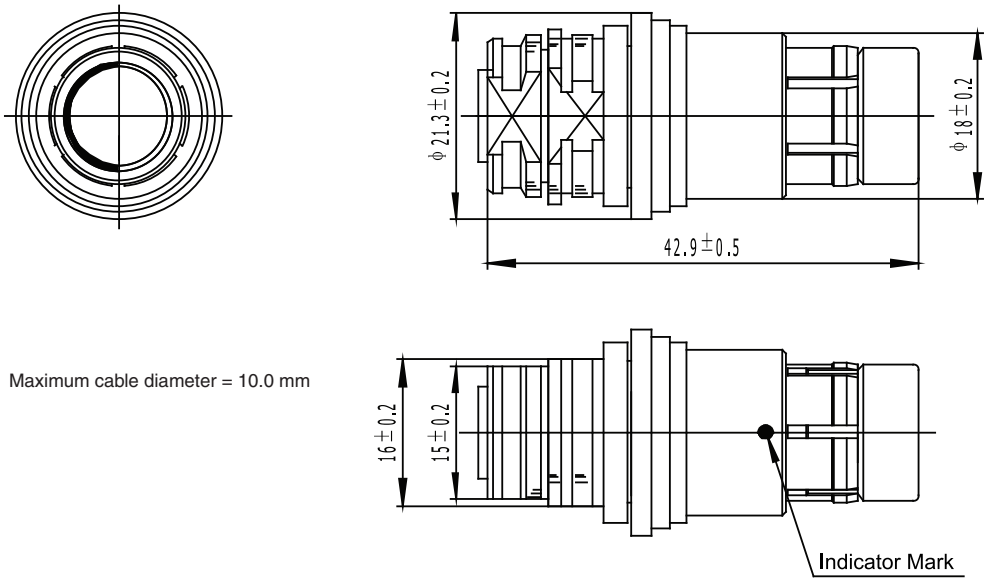

Maximum cable diameter = 10.0 mm

Panel-Mount Wire Termination Receptacle

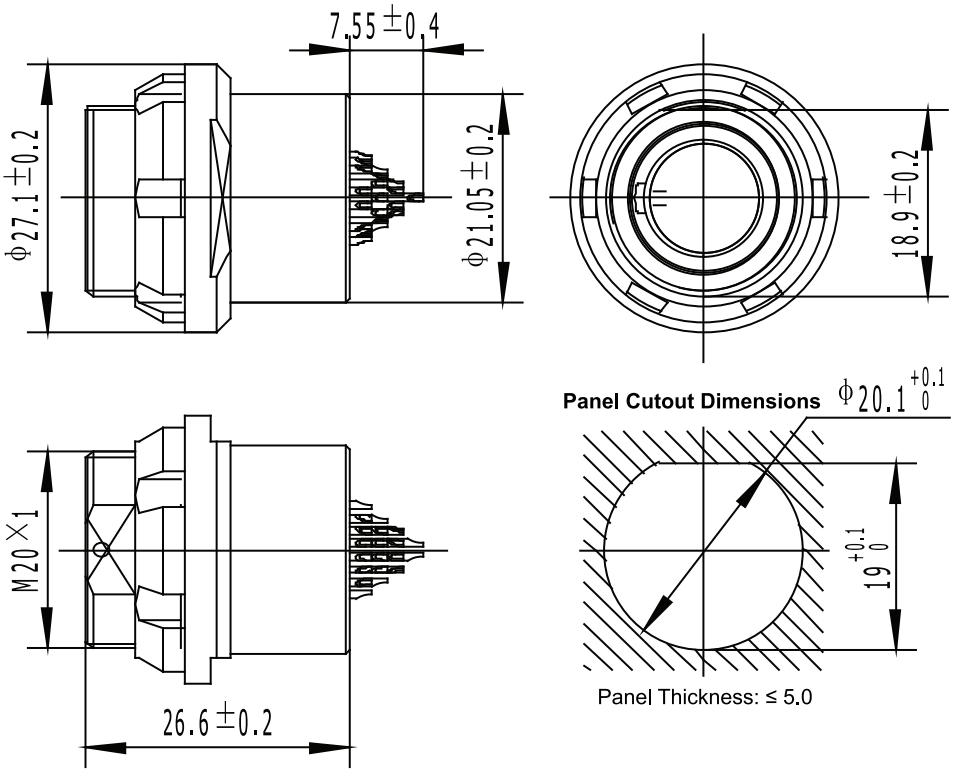

Catalog 1308940
Revised 9-14

www.te.com

Dimensions are shown for reference purposes only. Specifications subject to change.

Dimensions are in millimeters unless otherwise specified.

USA: +1 800 522 6752
Asia Pacific: +86 0 400 820 6015
UK: +44 800 267 666

For additional support numbers please visit www.te.com

Shell Series 5 (Continued)

Panel-Mount, Board-Mount Receptacle

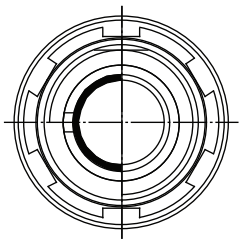

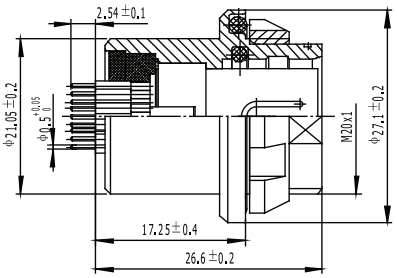

Panel Cutout Dimensions

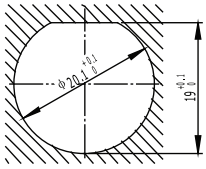

Panel Thickness: ≤ 4.0

Note: Available for 0.5, 0.7, and 0.9-mm-dia contacts

Contact Arrangement

Receptacle (A) Socket Contacts	Plug (B) Pin Contacts	Receptacle (A) Pin Contacts	Plug (B) Socket Contacts	Layout Code	No. of Contacts (Contact Dia.)	Current Rating (A)	DWV*
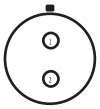	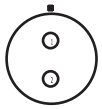	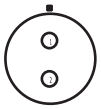	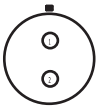	051	2 (2.0 mm)	18	I
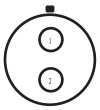	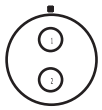	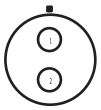	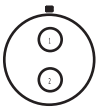	087	2 (3.0 mm)	20	I
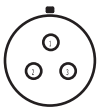	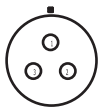	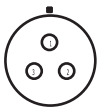	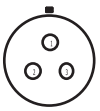	052	3 (2.0 mm)	16	I
	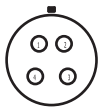	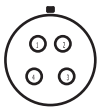	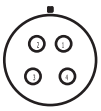	053	4 (2.0 mm)	14	II
				054	1 (2.0 mm) 6 (1.3 mm)	19 5.0	II
		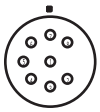		067	8 (1.3 mm)	7.2	II
				101	1 (2.0 mm) 8 (1.3 mm)	19 4.0	II
				062	10 (1.3 mm)	6.3	II
				069	12 (1.3 mm)	5.5	II

*Dielectric Withstanding Voltage: See Table 2, page 2

Dimensions are shown for reference purposes only. Specifications subject to change.

Dimensions are in millimeters unless otherwise specified.

USA: +1 800 522 6752
Asia Pacific: +86 0 400 820 6015
UK: +44 800 267 666

For additional support numbers please visit www.te.com

Shell Series 5 Contact Arrangements (Continued)

Contact Arrangement

Receptacle (A) Socket Contacts	Plug (B) Pin Contacts	Receptacle (A) Pin Contacts	Plug (B) Socket Contacts	Layout Code	No. of Contacts (Contact Dia.)	Current Rating (A)	DWV*
				104	3 (1.3 mm) 10 (0.7 mm)	10 1	II
				058	15 (0.9 mm)	2.7	II
				110	4 (1.6 mm) 12 (0.7 mm)	10 0.5	II
				038	18 (0.9 mm)	3.2	III
				102	27 (0.7 mm)	2.2	III
				093	24 (0.7 mm)	2.5	III
				122	40 (0.5 mm)	1	III
				137	10 (0.7 mm) 27 (0.5 mm)	2.2 1	III

*Dielectric Withstanding Voltage: See Table 2, page 2

Catalog 1308940
Revised 9-14

www.te.com

Dimensions are shown for reference purposes only. Specifications subject to change.

Dimensions are in millimeters unless otherwise specified.

USA: +1 800 522 6752
Asia Pacific: +86 0 400 820 6015
UK: +44 800 267 666

For additional support numbers please visit www.te.com

Connector Accessories

Sealing Boots

Table 1: Contact and Wire Information

Series, Free-Hanging Connector	Cable Diameter Range (in)	Part No. Boot Description (Straight)	Part No. Boot Description (90˚)
Series 1	> 0.15	202A111-3/42-0	222A111-3/42-0
Series 2	0.15-0.24	202A111-3/42-0	222A111-3/42-0
	0.21-0.24	202A121-3/42-0	222A121-3/42-0
Series 3	0.15-0.24	202A111-3/42-0	222A111-3/42-0
	0.21-0.24	202A121-3/42-0	222A121-3/42-0
Series 4	0.21-0.31	202A121-3/42-0	222A121-3/42-0
Series 5	0.26-0.39	202A132-3/42-0	222A132-3/42-0

Note: If the cable diameter falls below the minimum diameter heat shrink tubing may be used to shim the boot. All boots are precoated with Raychem /42 hot-melt adhesive.

Dust Caps

Table 2: Insert Dielectric Withstanding Voltage

Series	Part No. Plug	Part No. Receptacle
Series 1	2157014-1	2157015-1
Series 2	2101580-1	2101579-1
Series 3	2157927-1	2157928-1
Series 4	2157929-1	2157930-1
Series 5	2101580-2	2101579-2

Catalog 1308940
Revised 9-14

www.te.com

Dimensions are shown for reference purposes only. Specifications subject to change.

Dimensions are in millimeters unless otherwise specified.

USA: +1 800 522 6752
Asia Pacific: +86 0 400 820 6015
UK: +44 800 267 666

For additional support numbers please visit www.te.com

Cross Reference: Descriptive Part Number to TE Part Number

Shell Series	Type	Configuration	Descriptive Part No.	TE Part No.
1	Panel-Mount Receptacle	3 Pos Sockets, PCB Tails, Single Key	1-B-B-052-1-1	2157738-1
		7 Pos Sockets, PCB Tails, Double Key	1-B-B-056-1-2	2157951-1
		7 Pos Sockets, PCB Tails, Single Key	1-B-B-056-1-1	2157949-1
		9 Pos Sockets, PCB Tails, Double Key	1-B-B-059-1-2	2157952-1
		9 Pos Sockets, PCB Tails, Single Key	1-B-B-059-1-1	2157950-1
	Plug	3 Pos Pins, Solder Cup Tails, Single Key	1-B-P-052-2-1	2157739-1
		7 Pos Pins, Solder Cup Tails, Double Key	1-B-P-056-2-2	2157947-1
		7 Pos Pins, Solder Cup Tails, Single Key	1-B-P-056-2-1	2157945-1
		9 Pos Pins, Solder Cup Tails, Double Key	1-B-P-059-2-2	2157948-1
		9 Pos Pins, Solder Cup Tails, Single Key	1-B-P-059-2-1	2157946-1
2	Panel-Mount Receptacle	7 Pos Sockets, PCB Tails, Single Key	2-B-B-057-1-1	2101553-1
		7 Pos Sockets, PCB Tails, Double Key	2-B-B-057-1-2	2101553-2
		7 Pos Sockets, Solder Cup Tails, Single Key	2-B-A-057-1-1	2101676-1
		7 Pos Sockets, Solder Cup Tails, Double Key	2-B-A-057-1-2	2101676-2
		8 Pos Sockets, PCB Tails, Single Key	2-B-B-058-1-1	2157375-1
		8 Pos Sockets, PCB Tails, Double Key	2-B-B-058-1-2	2157375-2
		8 Pos Sockets, PCB Tails, Third Key	2-B-B-058-1-3	2157375-3
		12 Pos Sockets, PCB Tails, Double Key	2-B-B-062-1-2	2157538-2
		12 Pos Sockets, PCB Tails, Single Key	2-B-B-062-1-1	2157538-1
	Plug	7 Pos Pins, Solder Cup Tails, Single Key	2-B-P-057-2-1	2101550-1
		7 Pos Pins, Solder Cup Tails, Double Key	2-B-P-057-2-2	2101550-2
		8 Pos Pins, Solder Cup Tails, Single Key	2-B-P-058-2-1	2157376-1
		8 Pos Pins, Solder Cup Tails, Double Key	2-B-P-058-2-2	2157376-2
		8 Pos Pins, Solder Cup Tails, Third Key	2-B-P-058-2-3	2157376-3
		12 Pos Pins, Solder Cup Tails, Double Key	2-B-P-062-2-2	2157539-2
		12 Pos Pins, Solder Cup Tails, Single Key	2-B-P-062-2-1	2157539-1
4	Panel-Mount Receptacle	4 Pos Pins, Solder Cup Tails, Single Key	4-B-A-087-3-1	2157468-1
		4 Pos Pins, Solder Cup Tails, Double Key	4-B-A-087-3-2	2157468-2
		19 Pos Sockets, PCB Tails, Single Key	4-B-B-092-1-1	2157342-1
		19 Pos Sockets, Solder Cup Tails, Single Key	4-B-A-092-1-1	2157343-1
	Plug	4 Pos Sockets, Solder Cup Tails, Single Key	4-B-P-087-4-1	2157469-1
		4 Pos Sockets, Solder Cup Tails, Double Key	4-B-P-087-4-2	2157469-2
		19 Pos Pins, Solder Cup Tails, Single Key	4-B-P-092-2-1	2157344-1
5	Panel-Mount Receptacle	40 Pos Sockets, PCB Tails, Single Key	5-B-B-122-1-1	2101549-1
		40 Pos Sockets, Solder Cup Tails, Single Key	5-B-A-122-1-1	2101677-1
		40 Pos, Sockets, PCB Tails, Double Key	5-B-B-122-1-2	2101549-2
		40 Pos, Sockets, Solder Cup Tails, Double Key	5-B-A-122-1-2	2101677-2
	Plug	40 Pos Pins, Solder Cup Tails, Double Key	5-B-P-122-2-2	2101551-2
		40 Pos Pins, Solder Cup Tails, Single Key	5-B-P-122-2-1	2101551-1

Dimensions are shown for reference purposes only. Specifications subject to change.

Dimensions are in millimeters unless otherwise specified.

USA: +1 800 522 6752
Asia Pacific: +86 0 400 820 6015
UK: +44 800 267 666

For additional support numbers please visit www.te.com

Metal-Shell Micro Circular Connectors

Compatible
USB 2.0 signal compatible

Flexible Configurations
Three coupling styles:
- Push-pull
- Bayonet
- Threaded

Common internal design for all three coupling styles

Two types of well-established contacts:
- Pin and socket
- Spring probe

Reliable
Individual O-rings on all contacts provide improved sealing

IP67 sealing

Metal adapter for shield termination and overmolding:

Versatile
Signal only and hybrid signal/power versions

Solder cup wire termination; solder tails for receptacle board mounting

Jam nut style, rear panel mounting

High-Performance Materials
LCP insulator material

Brass shell with black tin-nickel plating, rated at more than 120 hours salt spray

30 to 26 AWG wire range (24 AWG when using 7-strand and solid conductors)

Eye Pattern: Spring Probe Contact System
Mask per USB 2.0 Specification, 480 Mb/s

Input

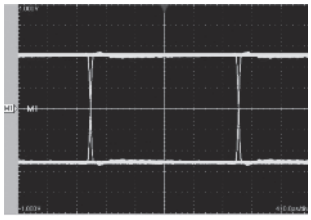

Output

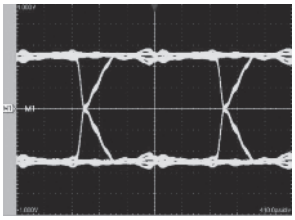

Performance Characteristics

Electrical

Current-Carrying Capacity — 2 amps max.

Operating Voltage —200 VAC max

Termination Resistance —30 milliohms max.

Mechanical and Environmental

Durability —2000 mating cycles

Operating Temperature—-55°C to +150°C

Sealing — IP67

Materials

Shell —Brass, black tin-nickel plated

Insert —LCP

Contacts —Brass, plated gold over nickel

O-Ring —Fluorosilicone

Technical Documents

Product Specification —
108-78938 (for 7 and 19 pin)
108-78967 (for 14 and 30 pin)

Qualification Test Report —
501-78493 (for 7 and 19 pin)
501-78526 (for 14 and 30 pin)

Catalog 1308940
Revised 9-14

www.te.com

Dimensions are shown for reference purposes only. Specifications subject to change.

Dimensions are in millimeters unless otherwise specified.

USA: +1 800 522 6752
Asia Pacific: +86 0 400 820 6015
UK: +44 800 267 666

For additional support numbers please visit www.te.com

Metal-Shell Micro Circular Connectors (Continued)

Signal Connectors: Pin and Socket Contacts

Shell Size	No. of Pos.	Coupling	Keying	Part No. CPlug Solder Cups	Part No. Receptacle Solder Cups	Part No. Receptacle, Solder Tail
M11	7	Push-Pull	N	2174219-1	2174222-1	2174225-1
			A	2174219-2	2174222-2	2174225-2
			B	2174219-3	2174222-3	2174225-3
		Bayonet	N	2174220-1	2174223-1	2174226-1
			A	2174220-2	2174223-2	2174226-2
			B	2174220-3	2174223-3	2174226-3
		Threaded	N	2174221-1	2174224-1	2174227-1
			A	2174221-2	2174224-2	2174227-2
			B	2174221-3	2174224-3	2174227-3
M14	19	Push-Pul	N	2174210-1	2174213-1	2174216-1
			IA	2174210-2	2174213-2	2174216-2
			B	2174210-3	2174213-3	2174216-3
		Bayonet	N	2174211-1	2174214-1	2174217-1
			A	2174211-2	2174214-2	2174217-2
			B	2174211-3	2174214-3	2174217-3
		Threaded	N	2174212-1	2174215-1	2174218-1
			A	2174212-2	2174215-2	2174218-2
			B	2174212-3	2174215-3	2174218-3

Signal Connectors: Spring Probe Contacts

Shell Size	No. of Pos. (Signal)	Coupling	Keying	Part No. CPlug Solder Cups	Part No. Receptacle Solder Cups	Part No. Receptacle, Solder Tail
M11	7	Bayonet	N	2174201-1	2174205-1	2174208-1
			A	2174201-2	2174205-2	2174208-2
			B	2174201-3	2174205-3	2174208-3
		Threaded	N	2174202-1	2174206-1	2174209-1
			A	2174202-2	2174206-2	2174209-2
			B	2174202-3	2174206-3	2174209-3
		Push-Pull	N	2174191-1	2174194-1	2174197-1
			A	2174191-2	2174194-2	2174197-2
			B	2174191-3	2174194-3	2174197-3
M14	19	Bayonet	N	2174192-1	2174195-1	2174198-1
			IA	2174192-2	2174195-2	2174198-2
			B	2174210-3	2174213-3	2174216-3
		Threaded	N	2174193-1	2174196-1	2174199-1
			A	2174193-2	2174196-2	2174199-2
			B	2174193-3	2174196-3	2174199-3

Hybrid Signal + Power Connectors: Pin and Socket Contacts

Shell Size	No. of Pos.	Coupling	Keying	Part No. CPlug Solder Cups	Part No. Receptacle Solder Cups	Part No. Receptacle, Solder Tail
M15	14 (12 Signal, 2 Power)	Bayonet	N	2201481-1	—	2201482-1
M22	30 (28 Signal, 2 Power)	Threaded	N	2201712-1	—	2201713-1

Dimensions are shown for reference purposes only. Specifications subject to change.

Dimensions are in millimeters unless otherwise specified.

USA: +1 800 522 6752
Asia Pacific: +86 0 400 820 6015
UK: +44 800 267 666

For additional support numbers please visit www.te.com

Metal-Shell Micro Circular Connectors (Continued)

Keying

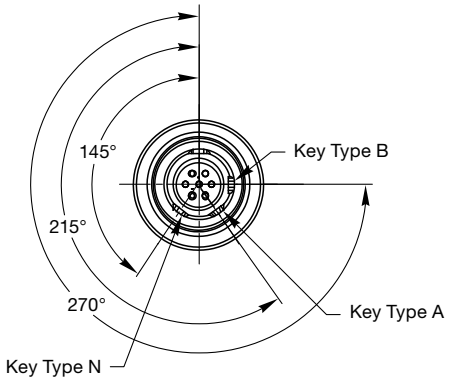

Plug Connectors, Solder Cup

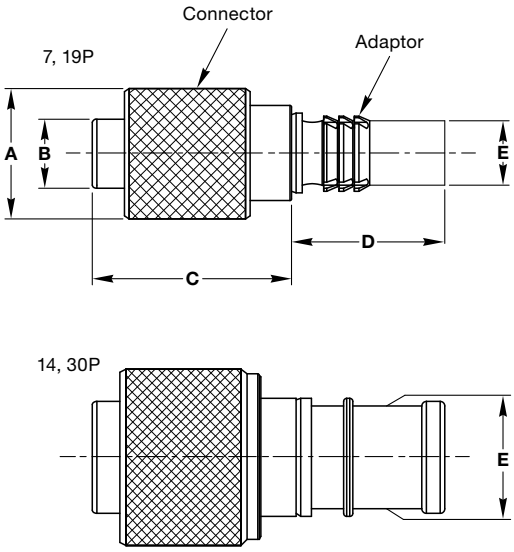

Coupling	No. of Pos.	Power Contacts	A (Dia.)	B (Dia.)	C	D Short Version	D Long Version	E	Key Type
Push-Pull	7	—	14	6.96	21.45	8.42	15.48	6.89	N, A, B
	19	—	17	9.36	21.85	8.42	15.48	8.65	N, A, B
Bayonet	7	—	14	7.62	21.45	8.42	15.48	6.89	N, A, B
	19	—	17	10.16	21.75	8.42	15.48	8.65	N, A, B
	14	2	19	12.16	21.95	19.4	20.3	12	N
Threaded	7	—	14	7.62	21.45	8.42	15.48	6.89	N, A, B
	19	—	16	10.16	21.45	8.42	15.48	8.65	N, A, B
	30	2	25	18.4	13.3	16	24	19.1	N

Contact Solder Cup Dimensions

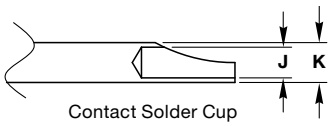

No. of Pos.	Power Contacts	Signal J	Signal K	Power J	Power K
7, 19	—	0.65	0.85	—	—
14	2	0.9	1.15	1.2	1.5
30	2	0.76	1	1	1.3

Catalog 1308940
Revised 9-14

www.te.com

Dimensions are shown for reference purposes only. Specifications subject to change.

Dimensions are in millimeters unless otherwise specified.

USA: +1 800 522 6752
Asia Pacific: +86 0 400 820 6015
UK: +44 800 267 666

For additional support numbers please visit www.te.com

Metal-Shell Micro Circular Connectors (Continued)

Keying

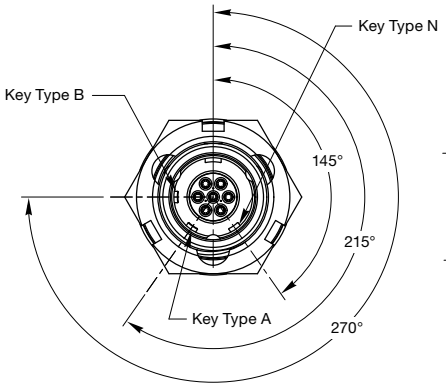

Receptacle Connectors

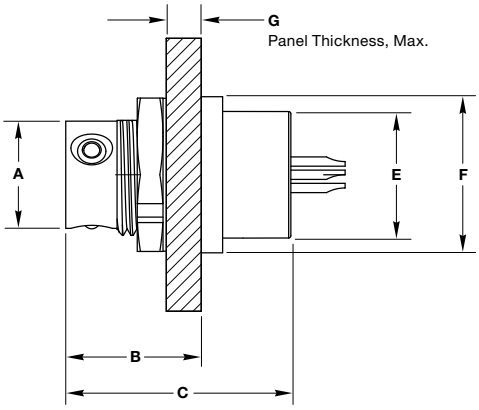

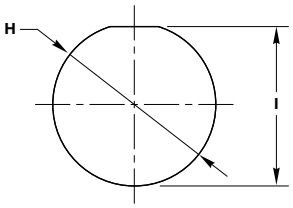

Panel Cutout

Coupling	No. of Pos.	A (Dia.)	B	C	E (Dia.)	F (Dia.)	G
Push-Pull	7	9.82	12.41	20.64	11.6	14.3	3.2
	19	12.36	12.41	20.73	13.4	18	3.2
Bayonet	7	9.85	15.41	20.6	11.6	14.3	2.8
	19	12.05	15.41	20.5	14.4	18	2.8
	14	14.05	15.41	20.7	14.7	—	3.0
Threaded	7	10.54	13.44	18.6	11.6	14.3	3.2
	19	13.34	13.44	18.4	14.4	18	3.2
	30	—	13.15	19.7	19.3	—	3.6

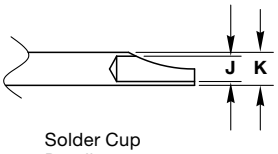

Solder Cup Detail

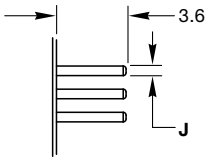

Solder Tail Detail (7 and 19 Position)

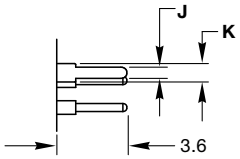

Solder Tail Detail (14 and 30 Position)

Contacts

Contact Type	No. of Pos.	Power Contacts	Signal J	Signal K	Power J	Power K
Solder Cup	7, 19	—	0.65	0.85	—	—
Solder Tail	7, 19	—	.5	—	—	—
	14	2	.5	.85	.7	1.15
	30	2	.5	.85	.7	1.16

Panel Cutout Dimensions

Shell Size	H (Dia.)	I
M11	11.2	10.95
M14	14.4	13.5
M15	16.2	15.3
M22	22.5	21.5

Catalog 1308940
Revised 9-14

www.te.com

Dimensions are shown for reference purposes only. Specifications subject to change.

Dimensions are in millimeters unless otherwise specified.

USA: +1 800 522 6752
Asia Pacific: +86 0 400 820 6015
UK: +44 800 267 666

For additional support numbers please visit www.te.com

Metal-Shell Micro Circular Connectors (Continued)

PCB Layouts for Solder Tail Receptacles

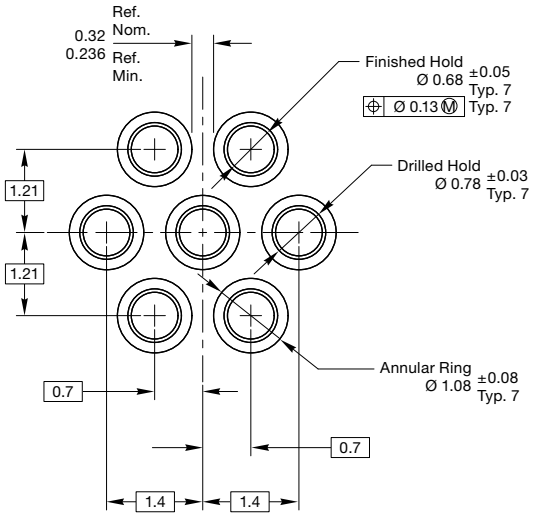

7-Position Receptacle

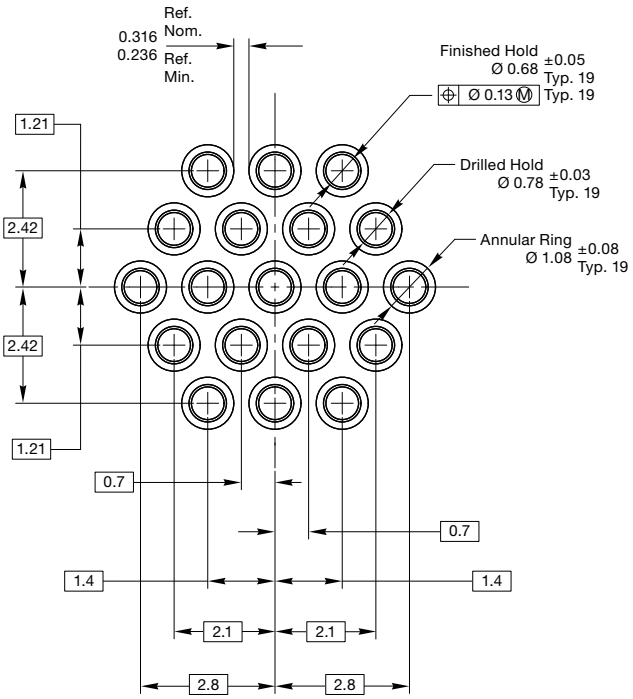

19-Position Receptacle

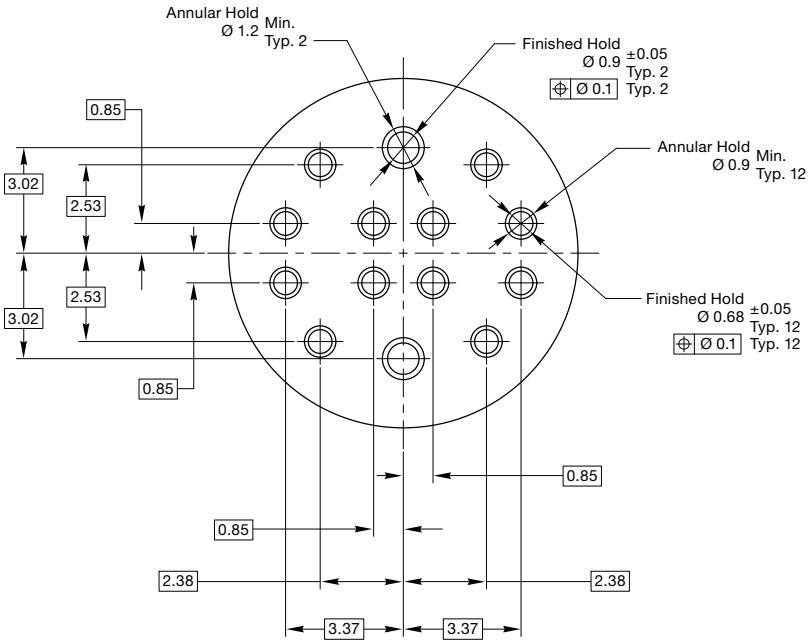

14-Position Hybrid Receptacle

Dimensions are shown for reference purposes only. Specifications subject to change.

Dimensions are in millimeters unless otherwise specified.

USA: +1 800 522 6752
Asia Pacific: +86 0 400 820 6015
UK: +44 800 267 666

For additional support numbers please visit www.te.com

Metal-Shell Micro Circular Connectors (Continued)

PCB Layouts for Solder Tail Receptacles

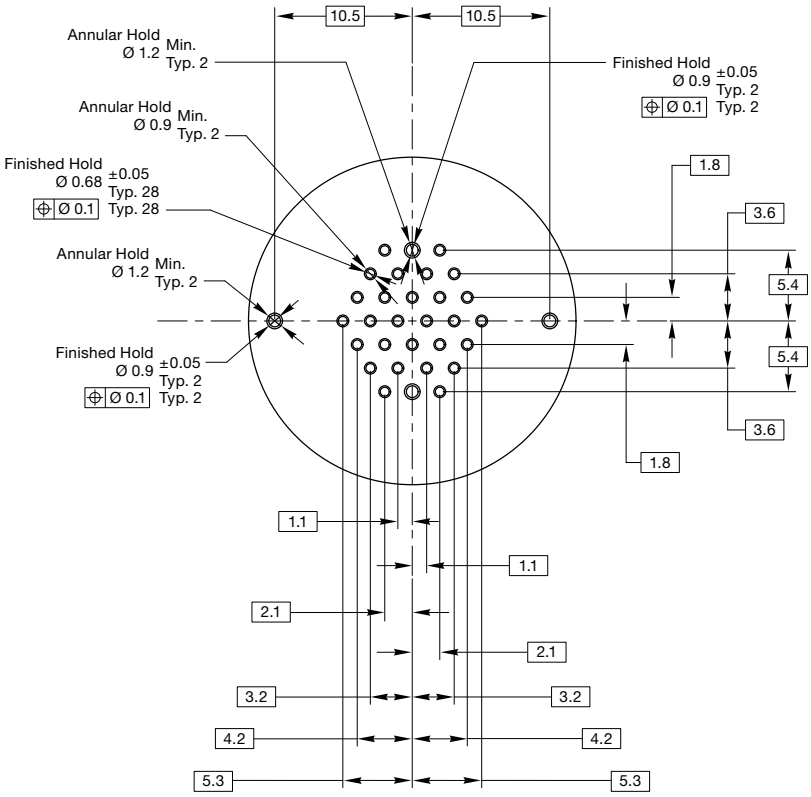

Accessories

Dust Caps

Shell Size	Coupling	Part No. Plug	Part No. Receptacle
M11	Push-Pull	*	2201013-x
	Bayonet	2229015-x	2201014-x
	Threaded	*	2201015-x
M14	Push-Pull	*	2201011-x
	Bayonet	*	2201010-x
	Threaded	*	2201012-x
M15	Bayonet	*	*
M22	Threaded	*	*

-x suffix is length of wire rope: -1 = 70 mm • -2 = 100 mm • -3 = 120 mm • -4 = 150 mm.
*Consult TE.

Catalog 1308940
Revised 9-14

www.te.com

Dimensions are shown for reference purposes only. Specifications subject to change.

Dimensions are in millimeters unless otherwise specified.

USA: +1 800 522 6752
Asia Pacific: +86 0 400 820 6015
UK: +44 800 267 666

For additional support numbers please visit www.te.com

NANONICS Environmentally Sealed Circular Connectors Introduction

NANONICS environmentally sealed circular offering represents one of the industry's smallest and most reliable connector designs. These connectors are ideally suited for applications where high density and reliability, and reduced size and weight are serious design parameters. Along with these attributes, they also meet the immersion requirements of IP68, more specifically, one meter of water for two hours, in a mated condition only. Utilizing the same contact system and materials as the DUALOBE rectangular series of connectors, the circular connectors are manufactured to the performance specifications of MIL-DTL-83513.

The plug connectors are offered in both a quick disconnect or threaded coupling configuration, and the receptacle connectors are offered in either a front panel mount or rear panel mount configuration. The quick disconnect plug will mate with both the front and rear panel mount receptacles, while the threaded coupling plug will only mate with the rear panel mount receptacle. These connectors are available in pin counts of 7, 19, and 44. Optional backshells are also available for the plug connectors and the rear panel mount receptacle. Ideal for cable-to-cable, cable-to-panel, or cable-to-board applications, TE Connectivity can also accommodate harness assemblies and custom configurations.

Specifications

Technical and Performance Data

Electrical

Contact Resistance — .003 - .008 ohms

Current Rating — 1 amp max. per contact

Dielectric Withstanding Voltage — Volts RMS 60 Hz at room ambient conditions. At sea level 500V. At 70,000 ft. 150V.

Insulation Resistance — 5000 megohms min. (@ 500 VDC) at room ambient conditions.

Magnetic Permeability — 2 mu max.

Temperature Range — -55˚C to +200˚C

Durability — 250 mates/demates

Jam Nut Torque —
7 Pos. — 6 in-lbs. max.
19 Pos. — 8 in-lbs. max.
44 Pos. — 10 in-lbs. max.

Coupling Nut Torque —
7 Pos. — 6 in-lbs. max.
19 Pos. — 8 in-lbs. max.
44 Pos. — 10 in-lbs. max.

Catalog 1308940
Revised 9-14

www.te.com

Dimensions are shown for reference purposes only. Specifications subject to change.

Dimensions are in millimeters unless otherwise specified.

USA: +1 800 522 6752
Asia Pacific: +86 0 400 820 6015
UK: +44 800 267 666

For additional support numbers please visit www.te.com

NANONICS Quick Disconnect — Plug Assemblies

19 Position

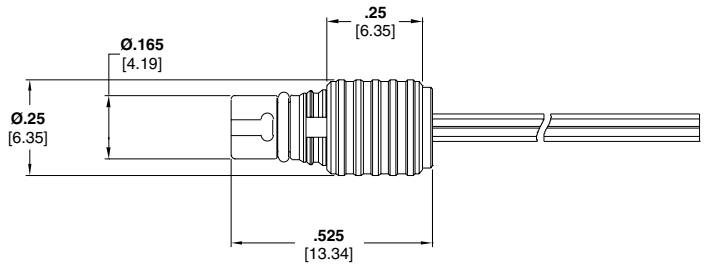

Product Facts

- Metal Shell
- Positions: 7, 19 and 44
- Environmental O-ring seal
- Push-Pull quick-disconnect coupling
- Factory wired to your specifications
- Contact TE Connectivity for custom configurations

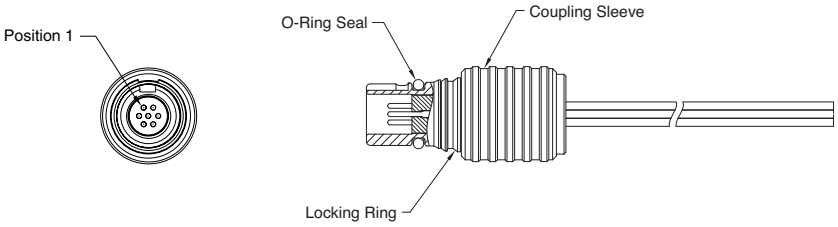

7 Position
Drawing Number 1589055

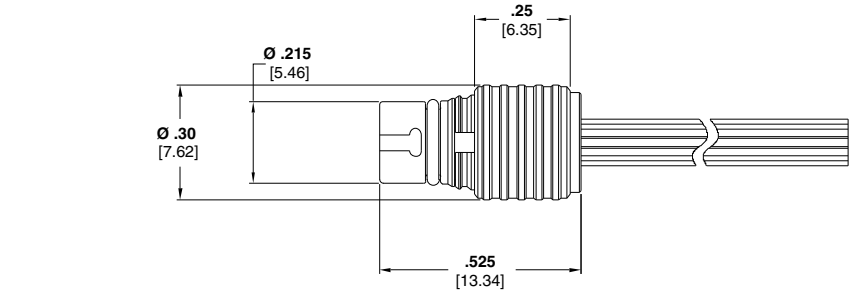

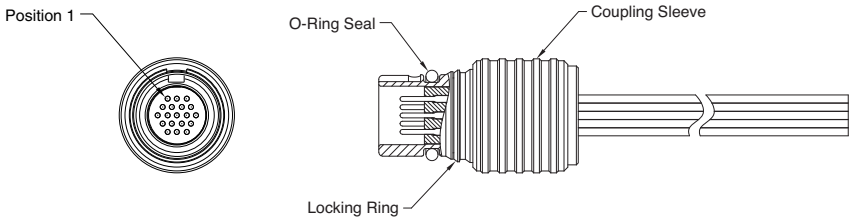

19 Position
Drawing Number 1589057

Catalog 1308940
Revised 9-14

www.te.com

Dimensions are shown for reference purposes only. Specifications subject to change.

Dimensions are in millimeters unless otherwise specified.

USA: +1 800 522 6752
Asia Pacific: +86 0 400 820 6015
UK: +44 800 267 666

For additional support numbers please visit www.te.com

NANONICS Quick Disconnect — Plug Assemblies (Continued)

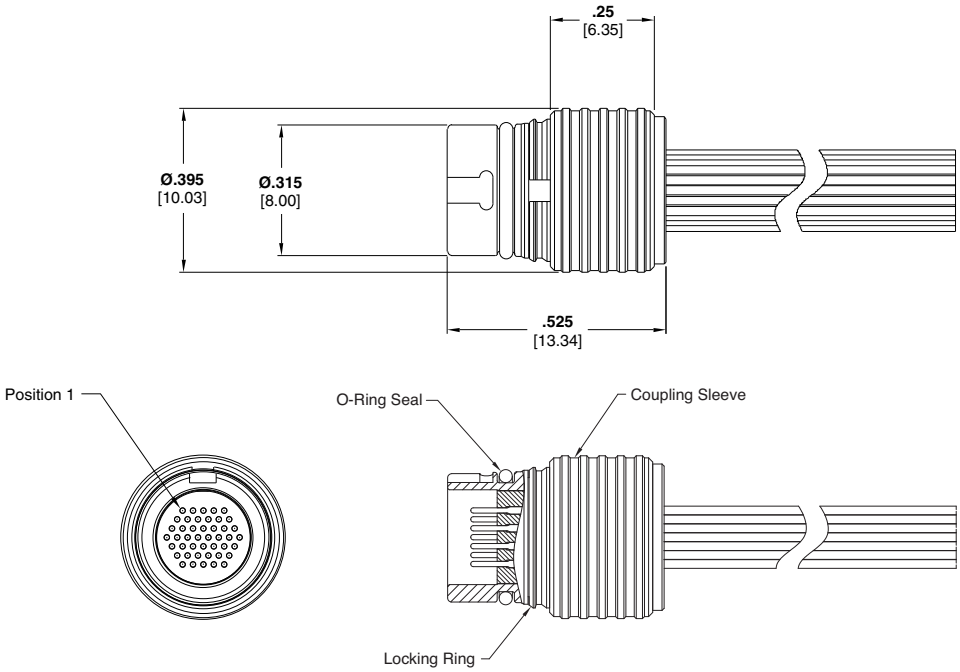

44 Position
Drawing Number 1589059

Dimensions are shown for reference purposes only. Specifications subject to change.

Dimensions are in millimeters unless otherwise specified.

USA: +1 800 522 6752
Asia Pacific: +86 0 400 820 6015
UK: +44 800 267 666

For additional support numbers please visit www.te.com

NANONICS Quick Disconnect — Plug Assemblies with Backshells

Product Facts

- Metal Shell
- Positions: 7, 19 and 44
- Environmental O-ring seal
- Factory wired to your specifications
- Backshell installed at factory
- Contact TE Connectivity for custom configurations

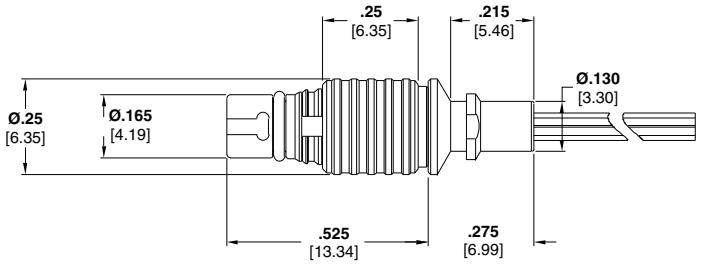

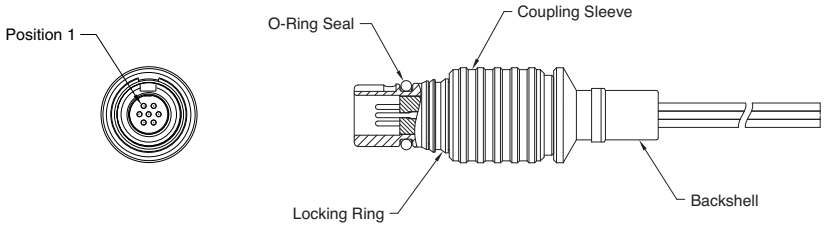

7 Position
Drawing Number 1589691

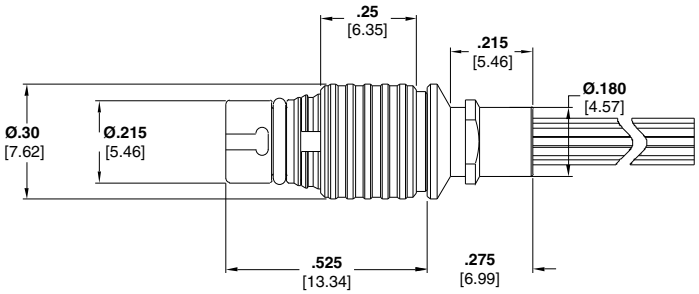

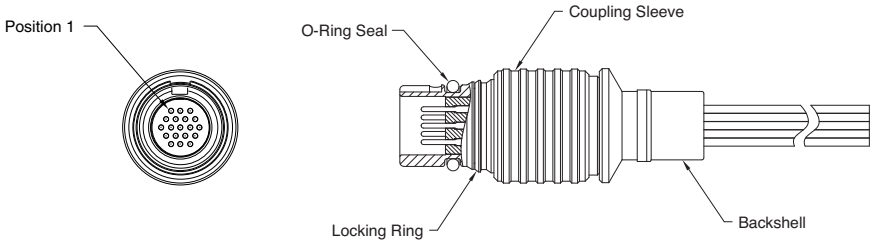

19 Position
Drawing Number 1589692

Catalog 1308940
Revised 9-14

www.te.com

Dimensions are shown for reference purposes only. Specifications subject to change.

Dimensions are in millimeters unless otherwise specified.

USA: +1 800 522 6752
Asia Pacific: +86 0 400 820 6015
UK: +44 800 267 666

For additional support numbers please visit www.te.com

NANONICS Quick Disconnect — Plug Assemblies with Backshells (Continued)

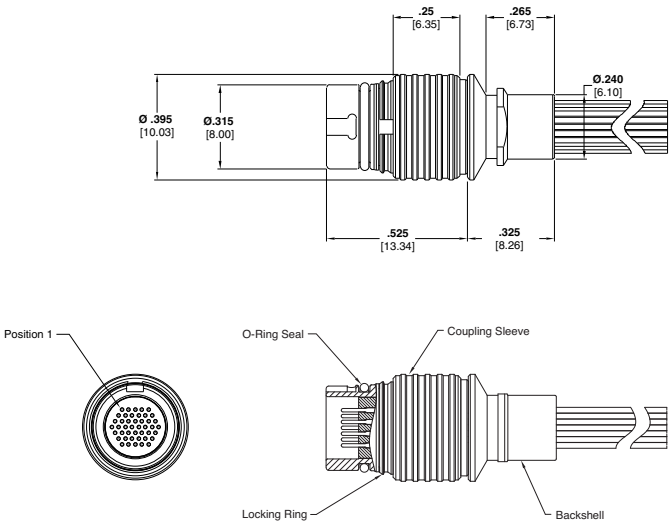

44 Position
Drawing Number 1589693

Catalog 1308940
Revised 9-14

www.te.com

Dimensions are shown for reference purposes only. Specifications subject to change.

Dimensions are in millimeters unless otherwise specified.

USA: +1 800 522 6752
Asia Pacific: +86 0 400 820 6015
UK: +44 800 267 666

For additional support numbers please visit www.te.com

NANONICS Quick Disconnect — Plug Assemblies with Backshells

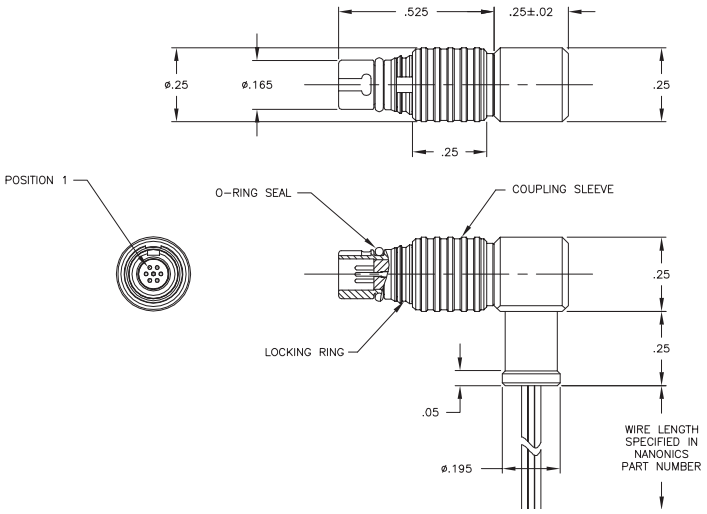

7 Position
Drawing Number 1925026

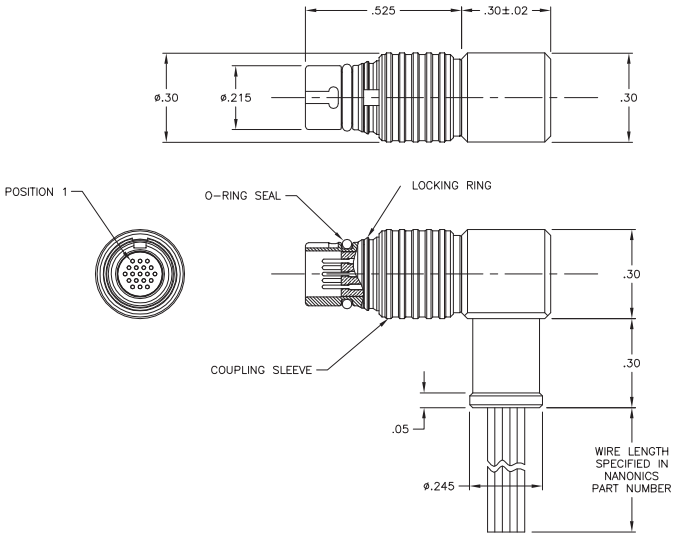

19 Position
Drawing Number 1925027

Catalog 1308940
Revised 9-14

www.te.com

Dimensions are shown for reference purposes only. Specifications subject to change.

Dimensions are in millimeters unless otherwise specified.

USA: +1 800 522 6752
Asia Pacific: +86 0 400 820 6015
UK: +44 800 267 666

For additional support numbers please visit www.te.com

NANONICS Quick Disconnect — Plug Assemblies with Backshells (Continued)

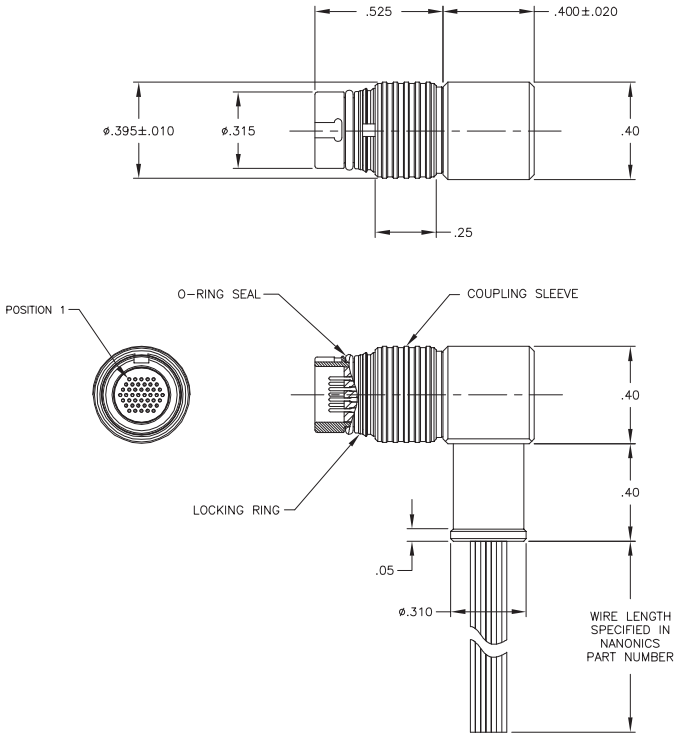

44 Position
Drawing Number 1925028

Dimensions are shown for reference purposes only. Specifications subject to change.

Dimensions are in millimeters unless otherwise specified.

USA: +1 800 522 6752
Asia Pacific: +86 0 400 820 6015
UK: +44 800 267 666

For additional support numbers please visit www.te.com

NANONICS Quick Disconnect — Receptacle Assemblies, Flush Mount

19 Position

Product Facts

- Metal Shell
- Positions: 7, 19 and 44
- Bulkhead O-ring seal
- Factory wired to your specifications
- Contact TE Connectivity for custom configurations

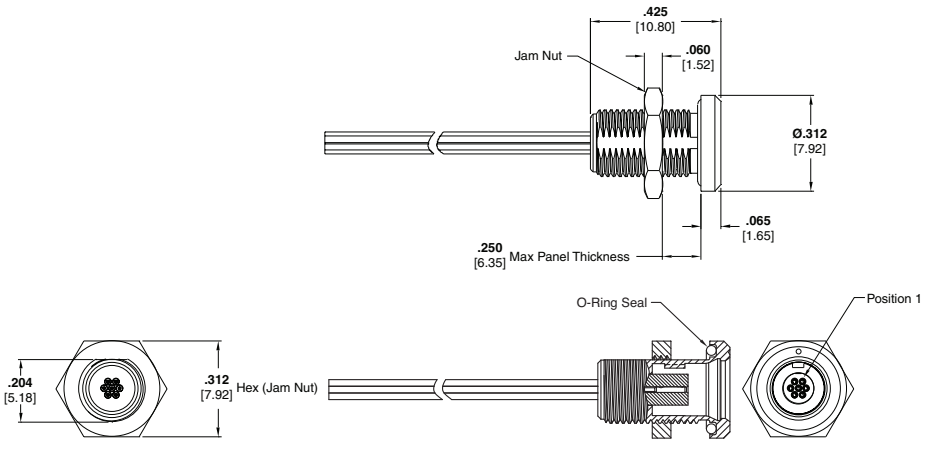

7 Position
Drawing Number 1589056

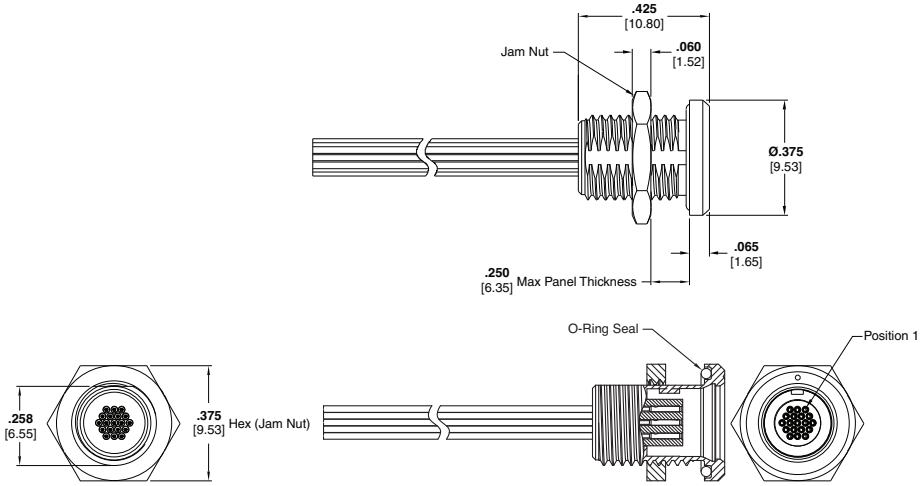

19 Position
Drawing Number 1589058

NANONICS Quick Disconnect — Receptacle Assemblies, Flush Mount (Continued)

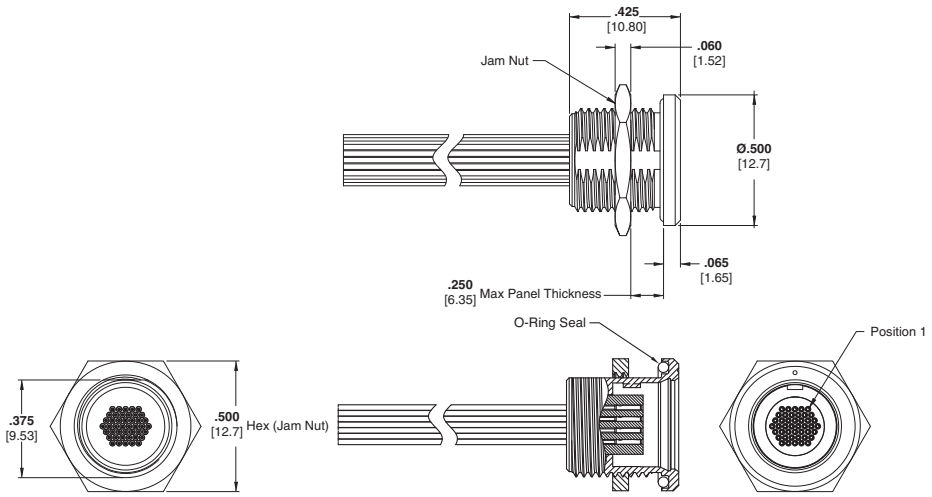

44 Position
Drawing Number 1589690

Catalog 1308940
Revised 9-14

www.te.com

Dimensions are shown for reference purposes only. Specifications subject to change.

Dimensions are in millimeters unless otherwise specified.

USA: +1 800 522 6752
Asia Pacific: +86 0 400 820 6015
UK: +44 800 267 666

For additional support numbers please visit www.te.com

NANONICS Threaded Coupling — Plug Assemblies

19 Position

Product Facts

- Metal Shell
- Positions: 7, 19 and 44
- Environmental O-ring seal
- Factory wired to your specifications
- Contact TE Connectivity for custom configurations

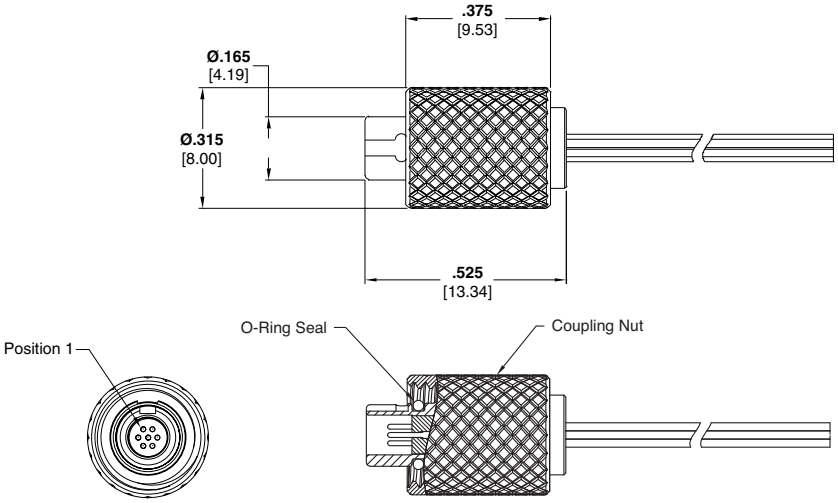

7 Position
Drawing Number 1589063

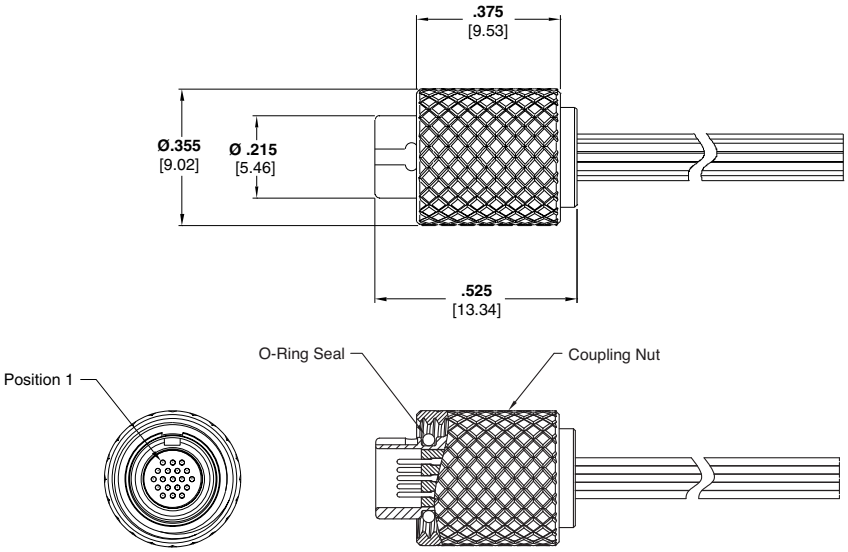

19 Position
Drawing Number 1589064

Catalog 1308940
Revised 9-14

www.te.com

Dimensions are shown for reference purposes only. Specifications subject to change.

Dimensions are in millimeters unless otherwise specified.

USA: +1 800 522 6752
Asia Pacific: +86 0 400 820 6015
UK: +44 800 267 666

For additional support numbers please visit www.te.com

NANONICS Threaded Coupling — Plug Assemblies (Continued)

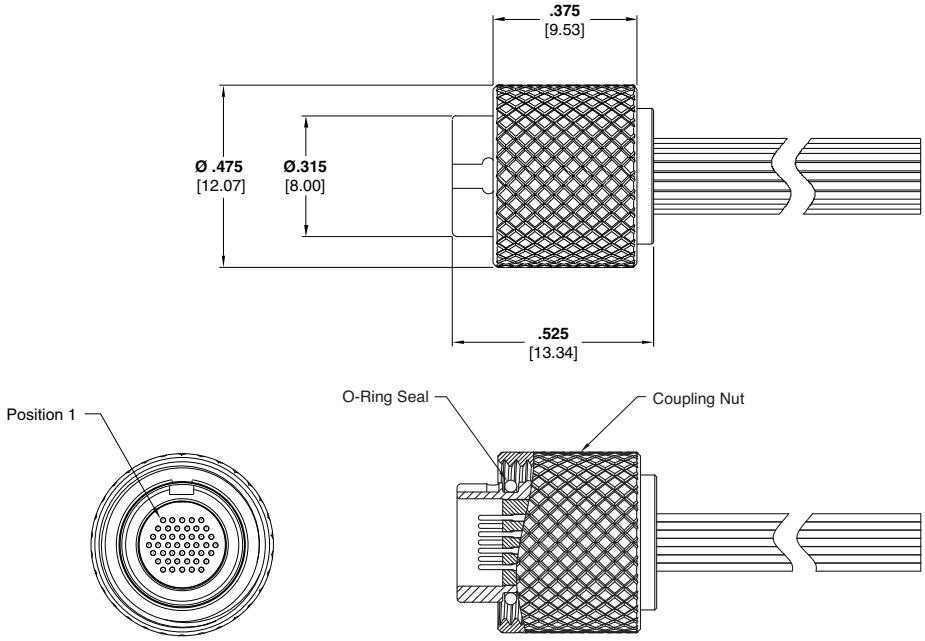

44 Position
Drawing Number 1589065

Dimensions are shown for reference purposes only. Specifications subject to change.

Dimensions are in millimeters unless otherwise specified.

USA: +1 800 522 6752
Asia Pacific: +86 0 400 820 6015
UK: +44 800 267 666

For additional support numbers please visit www.te.com

NANONICS Threaded Coupling — Plug Assemblies with Backshells

Product Facts

- Metal Shell
- Positions: 7, 19 and 44
- Environmental O-ring seal
- Factory wired to your specifications
- Backshell installed at factory
- Contact TE Connectivity for custom configurations

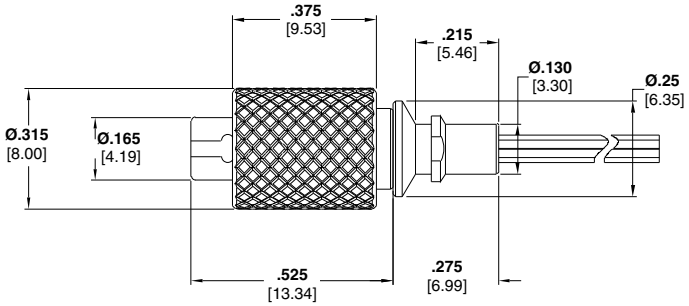

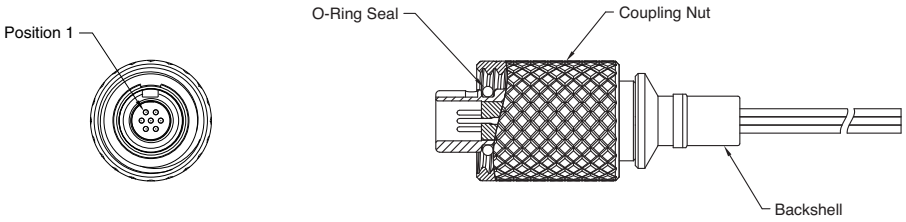

7 Position
Drawing Number 1589686

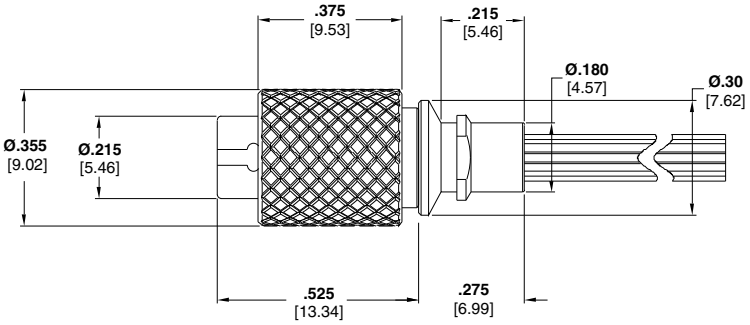

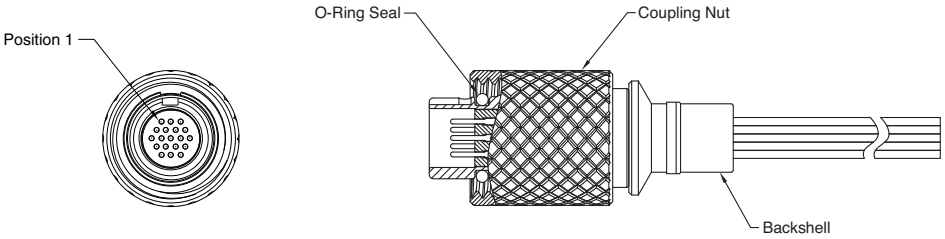

19 Position
Drawing Number 1589688

Dimensions are shown for reference purposes only. Specifications subject to change.

Dimensions are in millimeters unless otherwise specified.

USA: +1 800 522 6752
Asia Pacific: +86 0 400 820 6015
UK: +44 800 267 666

For additional support numbers please visit www.te.com

NANONICS Threaded Coupling — Plug Assemblies with Backshells (Continued)

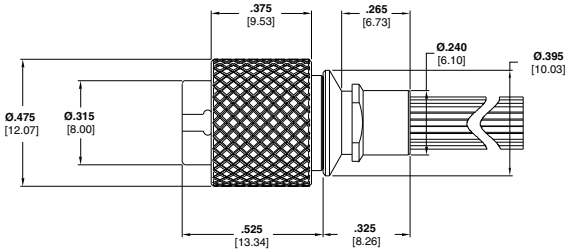

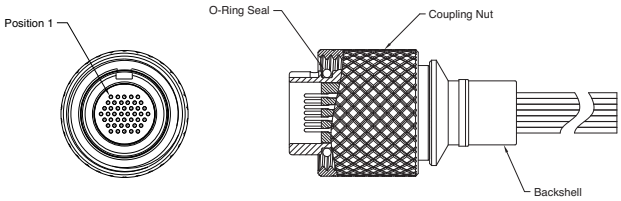

44 Position
Drawing Number 1589694

Dimensions are shown for reference purposes only. Specifications subject to change.

Dimensions are in millimeters unless otherwise specified.

USA: +1 800 522 6752
Asia Pacific: +86 0 400 820 6015
UK: +44 800 267 666

For additional support numbers please visit www.te.com

NANONICS Threaded Coupling — Plug Assemblies with Backshells (Continued)

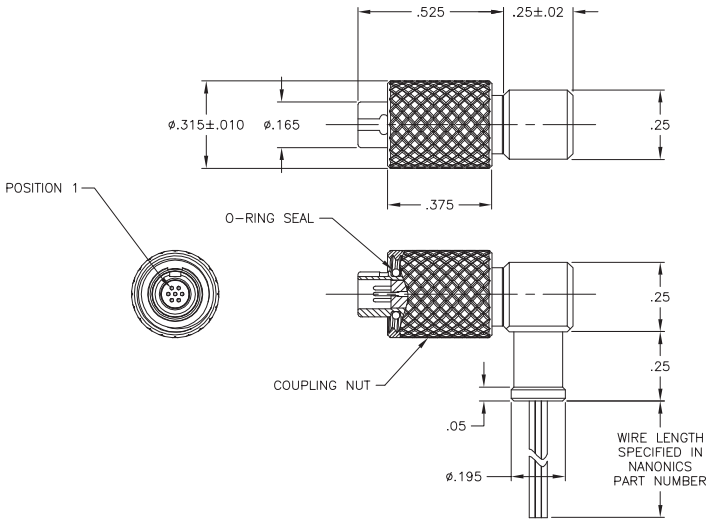

7 Position
Drawing Number 1925029

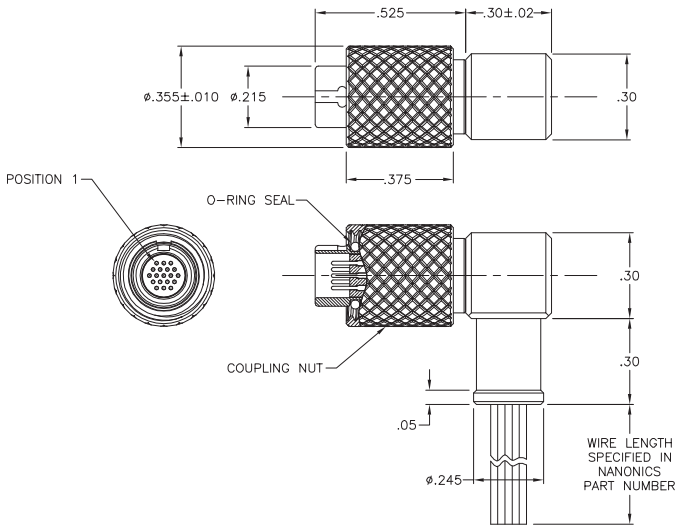

19 Position
Drawing Number 1925030

NANONICS Threaded Coupling — Plug Assemblies with Backshells (Continued)

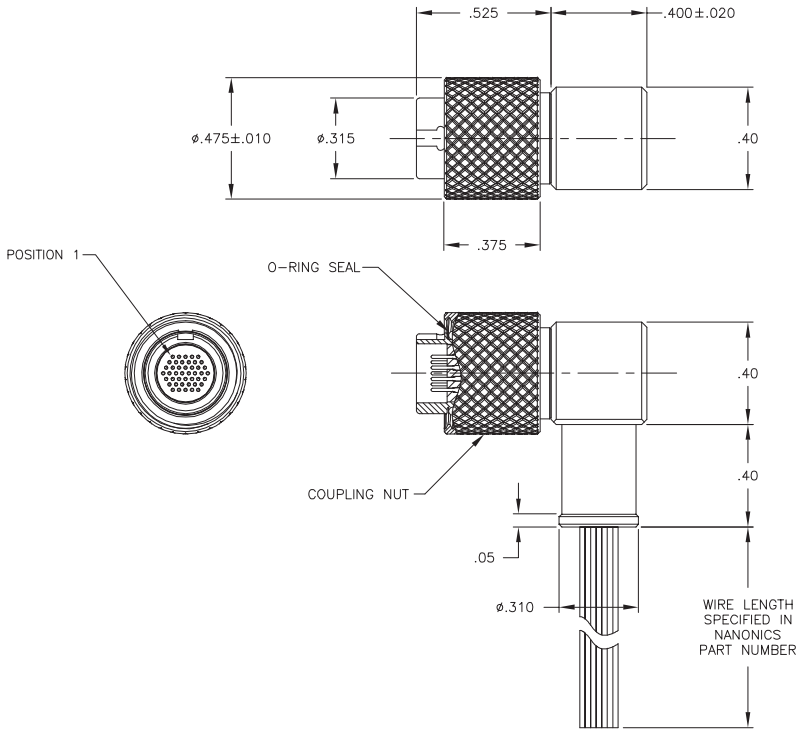

44 Position
Drawing Number 1925031

Dimensions are shown for reference purposes only. Specifications subject to change.

Dimensions are in millimeters unless otherwise specified.

USA: +1 800 522 6752
Asia Pacific: +86 0 400 820 6015
UK: +44 800 267 666

For additional support numbers please visit www.te.com

NANONICS Threaded Coupling/Quick Disconnect — Receptacle Assemblies, Panel Mount

19 Position

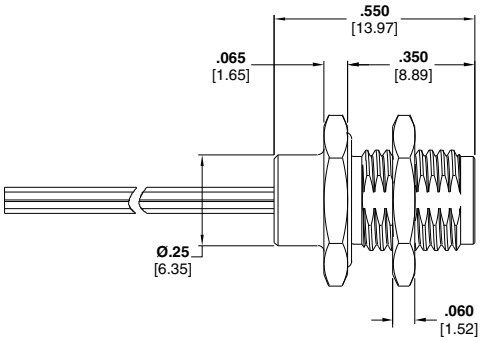

Product Facts

- Metal Shell
- Positions: 7, 19 and 44
- Bulkhead O-ring seal
- Factory wired to your specifications
- Panel Mount receptacle mates with the Quick Disconnect Plug and the Threaded Coupling Plug
- Contact TE Connectivity for custom configurations

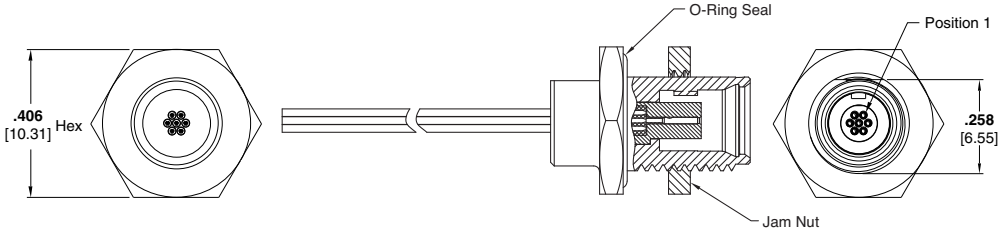

7 Position
Drawing Number 1589060

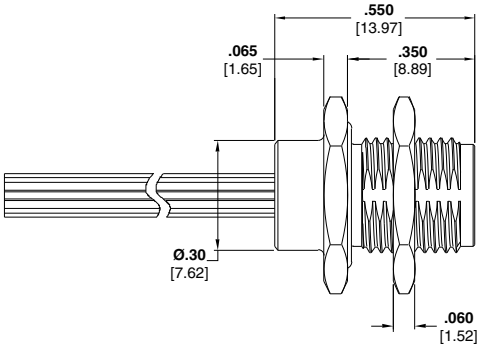

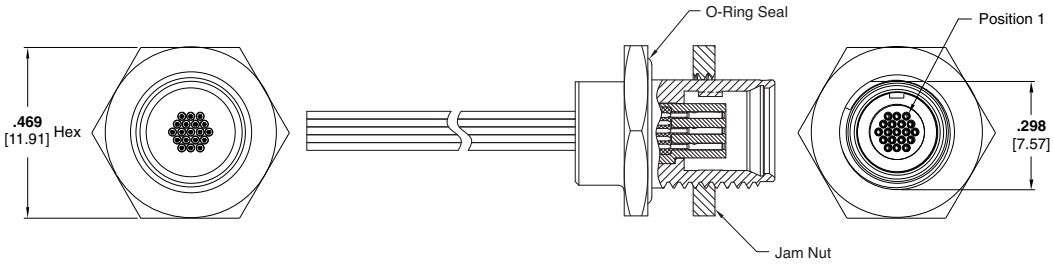

19 Position
Drawing Number 1589061

Catalog 1308940
Revised 9-14

www.te.com

Dimensions are shown for reference purposes only. Specifications subject to change.

Dimensions are in millimeters unless otherwise specified.

USA: +1 800 522 6752
Asia Pacific: +86 0 400 820 6015
UK: +44 800 267 666

For additional support numbers please visit www.te.com

NANONICS Threaded Coupling/Quick Disconnect — Receptacle Assemblies, Panel Mount
(Continued)

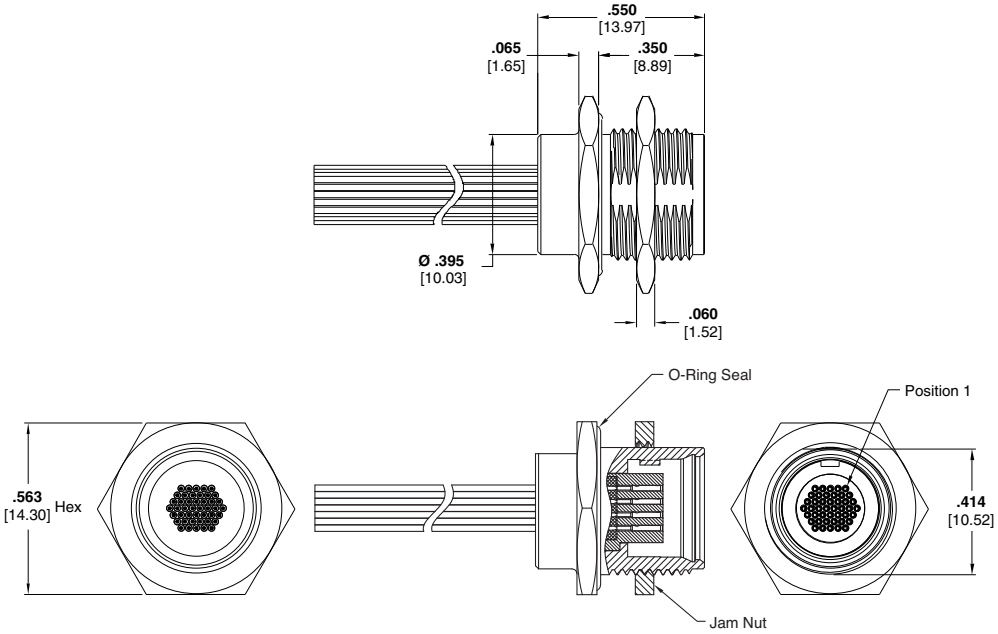

44 Position
Drawing Number 1589062

Dimensions are shown for reference purposes only. Specifications subject to change.

Dimensions are in millimeters unless otherwise specified.

USA: +1 800 522 6752
Asia Pacific: +86 0 400 820 6015
UK: +44 800 267 666

For additional support numbers please visit www.te.com

NANONICS Threaded Coupling/Quick Disconnect — Panel Mount Receptacle Assemblies w/Backshells

Product Facts

- Metal Shell
- Positions: 7, 19 and 44
- Bulkhead O-ring seal
- Factory wired to your specifications
- Panel Mount receptacle mates with the Quick Disconnect Plug and the Threaded Coupling Plug
- Contact TE Connectivity for custom configurations

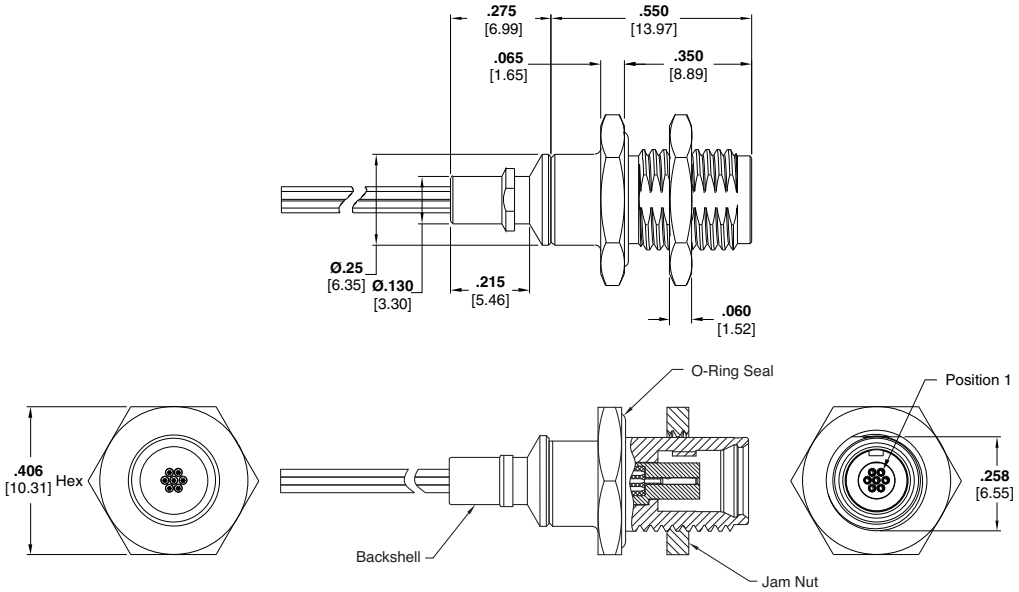

Receptacle Assembly 7 Position
Drawing Number 1589685

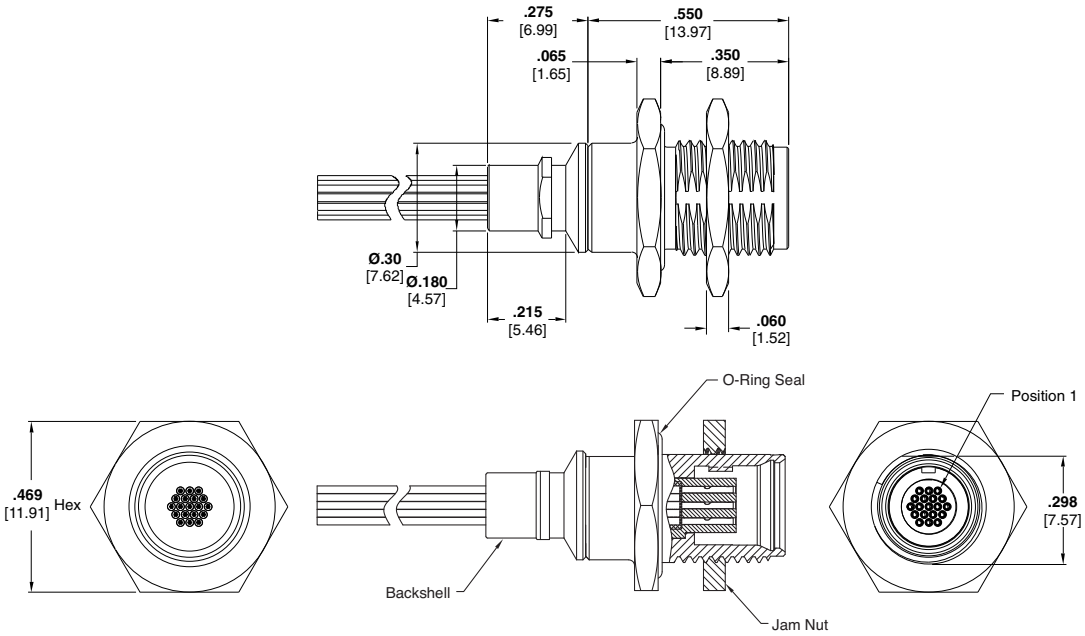

Receptacle Assembly 19 Position
Drawing Number 1589687

Catalog 1308940
Revised 9-14

www.te.com

Dimensions are shown for reference purposes only. Specifications subject to change.

Dimensions are in millimeters unless otherwise specified.

USA: +1 800 522 6752
Asia Pacific: +86 0 400 820 6015
UK: +44 800 267 666

For additional support numbers please visit www.te.com

NANONICS Threaded Coupling/Quick Disconnect — Panel Mount Receptacle Assemblies w/Backshells (Continued)

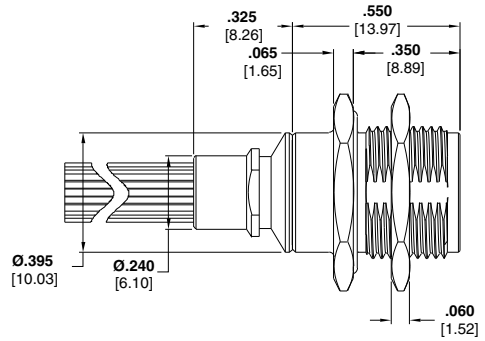

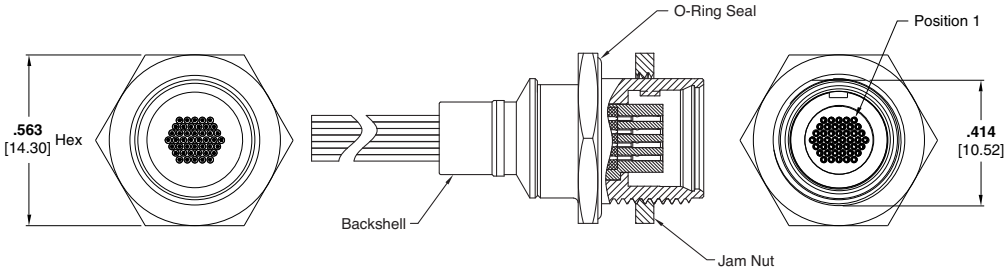

Receptacle Assembly 44 Position
Drawing Number 1589695

Part Numbering Guideline for NANONICS Environmentally Sealed Circular Connectors

Circular Connectors - Wire Terminations

XXX XXX XX X XX XXX X (XX)

Class/Type

- **QCM** Quick Disconnect, Circular, Metal
- **TCM** Threaded Coupling, Circular, Metal (TCM leadoff for plug only)
- **FCM** Flanged Coupling, Quick Disconnect, Metal (plugs only)

Positions

- **007** 7 Position
- **019** 19 Position
- **044** 44 Position

Configuration

- **PC** Plug
- **SC** Receptacle

Conductor Size/Strands

- **0** 28 AWG Solid
- **1** 30 AWG Solid
- **2** 30 AWG 7 Strand
- **3** 32 AWG 7 Strand
- **4** 34 AWG 7 Strand

Conductor Type

- **DX** White PTFE per M16878/6
- **DC** PTFE Color Coded per M16878/6
- **DM** PTFE Color Coded per MIL-STD-681 (10 solid colors repeating)
- **DT** White ETFE per M22759/33

Conductor Length

- **XXX** Three numbers only, length is in inches (i.e. 012 = twelve inches)
- **CXX** A "C" follwed by two numbers, length is in centimeters (i.e. C06 = 6 centimeters)
- **MXX** An "M" followed by two numbers, length is in meters (i.e. M02 = 2 meters)

Mounting (Receptacles Only)

- **P** Rear Panel Mount
- **F** Front Panel Mount

Features (Optional - cannot be used on front panel mount)

- **B** Straight Backshell
- **RX** Right Angle Backshell (refer to catalog image for X backshell orientation)

Dimensions are shown for reference purposes only. Specifications subject to change.

Dimensions are in millimeters unless otherwise specified.

USA: +1 800 522 6752
Asia Pacific: +86 0 400 820 6015
UK: +44 800 267 666

For additional support numbers please visit www.te.com

NANONICS Thru-Hole, Receptacle Assemblies, Vertical Mount

Product Facts

- Metal Shell
- Positions: 7, 19 and 44
- Bulkhead O-ring seal
- Mates with Quick Disconnect Plug and Threaded Coupling Plug
- Contact TE Connectivity for custom configurations

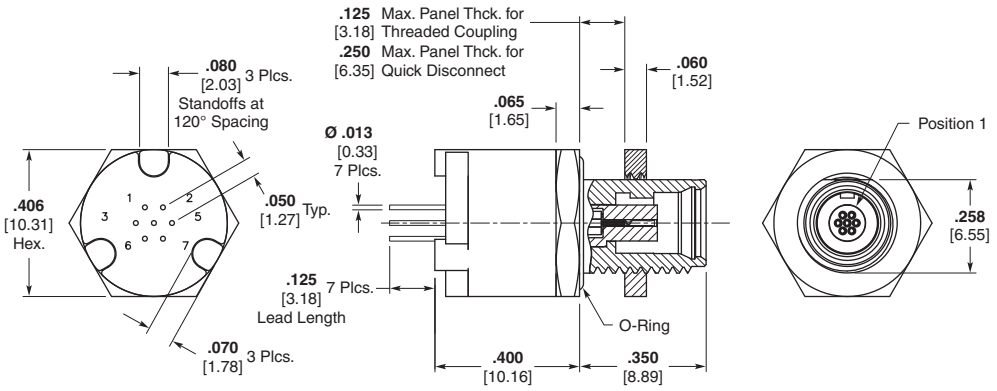

Receptacle Assembly 7 Position
Drawing Number 1589953

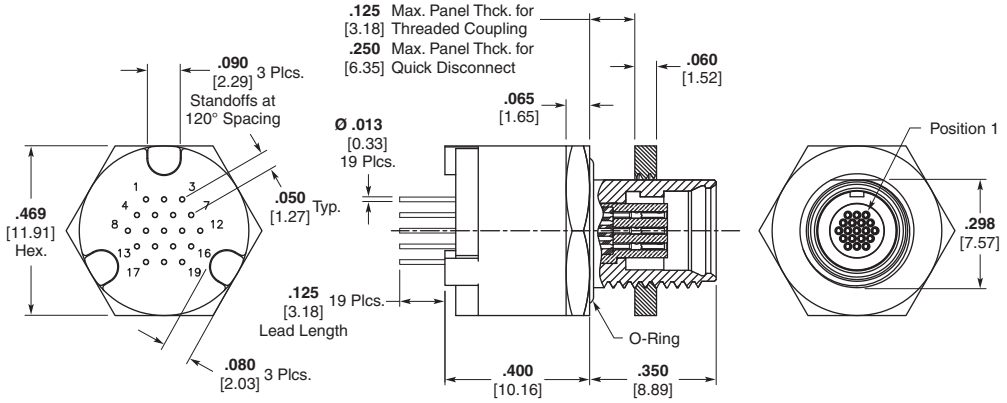

Receptacle Assembly 19 Position
Drawing Number 1589954

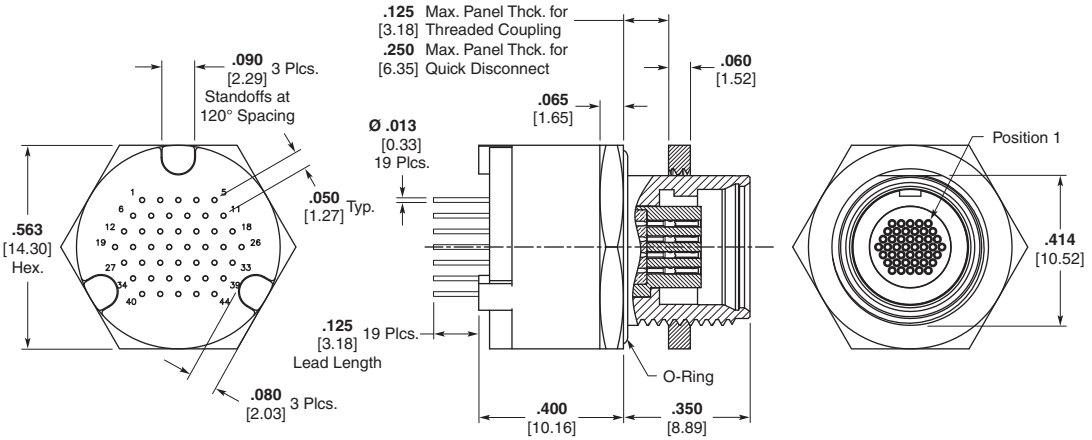

Receptacle Assembly 44 Position
Drawing Number 1589955

Catalog 1308940
Revised 9-14

www.te.com

Dimensions are shown for reference purposes only. Specifications subject to change.

Dimensions are in millimeters unless otherwise specified.

USA: +1 800 522 6752
Asia Pacific: +86 0 400 820 6015
UK: +44 800 267 666

For additional support numbers please visit www.te.com

Part Numbering Guideline for NANONICS Board Mount Termination Circular Connectors

Circular Connectors - Board Mount Terminations

QCM XXX M5 P

Class/Type

QCM Quick Disconnect, Circular, Metal

Mounting

P Rear Panel Mount

Positions

007 7 Position

019 19 Position

044 44 Position

Configuration

M5 Vertical, Thru-Hole

Catalog 1308940
Revised 9-14

www.te.com

Dimensions are shown for reference purposes only. Specifications subject to change.

Dimensions are in millimeters unless otherwise specified.

USA: +1 800 522 6752
Asia Pacific: +86 0 400 820 6015
UK: +44 800 267 666

For additional support numbers please visit www.te.com

Part Number Index Cross Reference

NANONICS Part Number	Tyco Electronics Part Number
Quick Disconnect	
QCM007PC2DC003	0-1589055-1
QCM007PC2DC006	0-1589055-2
QCM007PC2DC006B	0-1589691-5
QCM007PC2DC012	0-1589055-3
QCM007PC2DC012B	0-1589691-1
QCM007PC2DC018B	0-1589691-2
QCM007PC2DC020	0-1589055-6
QCM007PC2DC020B	0-1589691-9
QCM007PC2DC028	1-1589055-3
QCM007PC2DC036B	0-1589691-3
QCM007PC2DC040	0-1589055-8
QCM007PC2DC072	0-1589055-9
QCM007PC2DCC20B	0-1589691-6
QCM007PC2DCC30	1-1589055-0
QCM007PC2DCC50B	1-1589691-0
QCM007PC2DCM01	1-1589055-4
QCM007PC2DCM02	1-1589055-8
QCM007PC2DCM03	1-1589055-5
QCM007PC2DMC150	1-1589055-6
QCM007PC2DMC150B	0-1589691-7
QCM007PC2DMC46	1-1589055-1
QCM007PC2DMC50	1-1589055-7
QCM007PC2DMC50B	0-1589691-8
QCM007PC2DX006B	0-1589691-4
QCM007SC2DC003P	0-1589060-1
QCM007SC2DC004P	0-1589060-2
QCM007SC2DC006F	0-1589056-1
QCM007SC2DC006P	0-1589060-3
QCM007SC2DC012P	0-1589060-4
QCM007SC2DC012PB	0-1589685-2
QCM007SC2DC018PB	0-1589685-3
QCM007SC2DC020F	0-1589056-2
QCM007SC2DC020P	1-1589060-1
QCM007SC2DC036P	0-1589060-7
QCM007SC2DC036PB	0-1589685-4
QCM007SC2DCC15F	0-1589056-9
QCM007SC2DCC15P	1-1589060-4
QCM007SC2DCC20F	0-1589056-7
QCM007SC2DCC30F	0-1589056-3
QCM007SC2DCC30P	0-1589060-9
QCM007SC2DM003P	1-1589060-0
QCM007SC2DM006PB	0-1589685-5
QCM007SC2DM050PB	0-1589685-1
QCM007SC2DMC05F	0-1589056-8
QCM007SC2DMC16F	0-1589056-4
QCM007SC2DMC46F	0-1589056-5
QCM007SC2DX006F	0-1589056-6
QCM007SC2DYC15P	1-1589060-2
QCM007SC2DYM02P	1-1589060-5
QCM007SC2DYM1.5P	1-1589060-3
QCM019PC0DC012	0-1589057-1
QCM019PC0DM072B	0-1589692-1
QCM019PC2DC003	0-1589057-3
QCM019PC2DC006	0-1589057-4
QCM019PC2DC006B	0-1589692-3
QCM019PC2DC012	0-1589057-5
QCM019PC2DC020	0-1589057-6
QCM019PC2DC020B	0-1589692-5
QCM019PC2DC120B	0-1589692-2

NANONICS Part Number	Tyco Electronics Part Number
QCM019PC2DCC10	1-1589057-1
QCM019PC2DMC150	1-1589057-2
QCM019PC2DMC150B	0-1589692-4
QCM019PC2DMC46	1-1589057-8
QCM019PC2DMM01	1-1589057-0
QCM019PC2DXC30	0-1589057-9
QCM019SC0DC012F	0-1589058-1
QCM019SC0DC036P	1-1589061-4
QCM019SC0DCC15P	0-1589061-1
QCM019SC0DM012F	1-1589058-7
QCM019SC0DM072F	0-1589058-2
QCM019SC0DMC30P	1-1589061-2
QCM019SC0DXC15P	0-1589061-2
QCM019SC2DC003F	1-1589058-8
QCM019SC2DC003P	0-1589061-3
QCM019SC2DC006F	0-1589058-3
QCM019SC2DC006P	0-1589061-4
QCM019SC2DC012F	1-1589058-6
QCM019SC2DC012P	0-1589061-5
QCM019SC2DC018F	0-1589058-4
QCM019SC2DC020F	0-1589058-5
QCM019SC2DC020P	0-1589061-6
QCM019SC2DC024P	1-1589061-5
QCM019SC2DC036P	0-1589061-7
QCM019SC2DC180F	1-1589058-4
QCM019SC2DCC30P	0-1589061-8
QCM019SC2DM006PB	0-1589687-2
QCM019SC2DM024P	1-1589061-6
QCM019SC2DM027PB	0-1589687-1
QCM019SC2DM036P	1-1589061-0
QCM019SC2DMC05F	1-1589058-5
QCM019SC2DMC16F	0-1589058-6
QCM019SC2DMC30P	1-1589061-3
QCM019SC2DMC46F	0-1589058-7
QCM019SC2DXC30F	0-1589058-8
QCM019SC2DXC30P	0-1589061-9
QCM019SC4DX006P	1-1589061-1
QCM044PC2DC003	0-1589059-1
QCM044PC2DC006	0-1589059-2
QCM044PC2DC006B	0-1589693-1
QCM044PC2DC012	0-1589059-4
QCM044PC2DC012B	0-1589693-2
QCM044PC2DC020	0-1589059-6
QCM044PC2DC030	0-1589059-7
QCM044PC2DC036	1-1589059-1
QCM044PC2DC040	1-1589059-2
QCM044PC2DC050	1-1589059-0
QCM044PC2DC060B	0-1589693-3
QCM044PC2DC120B	0-1589693-4
QCM044PC2DC180B	0-1589693-5
QCM044SC0DM036P	1-1589062-3
QCM044SC0DM048P	1-1589062-4
QCM044SC0DM060P	1-1589062-5
QCM044SC2DC003P	0-1589062-1
QCM044SC2DC006F	0-1589690-3
QCM044SC2DC006P	0-1589062-2
QCM044SC2DC012F	0-1589690-4
QCM044SC2DC012P	0-1589062-3
QCM044SC2DC018F	0-1589690-5
QCM044SC2DC018P	0-1589062-8

NANONICS Part Number	Tyco Electronics Part Number
QCM044SC2DC019PB	0-1589695-1
QCM044SC2DC020F	0-1589690-1
QCM044SC2DC020P	1-1589062-2
QCM044SC2DC024F	0-1589690-8
QCM044SC2DC024P	1-1589062-6
QCM044SC2DC036P	0-1589062-5
QCM044SC2DC060F	0-1589690-6
QCM044SC2DC080P	1-1589062-1
QCM044SC2DC180F	0-1589690-2
QCM044SC2DM036P	0-1589062-9
QCM044SC2DM120P	1-1589062-0
QCM044SC2DMC16P	0-1589062-6
QCM044SC2DMC46P	0-1589062-7
QCM044SC2DMC50P	1-1589062-7
QCM044SC3DC012F	0-1589690-7
Threaded Coupling	
TCM007PC2DC003	0-1589063-1
TCM007PC2DC006	0-1589063-2
TCM007PC2DC006B	0-1589686-2
TCM007PC2DC012	0-1589063-4
TCM007PC2DC012B	0-1589686-3
TCM007PC2DC018B	0-1589686-4
TCM007PC2DC020	0-1589063-9
TCM007PC2DC036	0-1589063-7
TCM007PC2DCM02	1-1589063-0
TCM007PC2DM003	0-1589063-8
TCM007PC2DM006B	0-1589686-1
TCM007PC2DYC10B	0-1589686-5
TCM007PC2DYM01B	0-1589686-6
TCM019PC0DC036	1-1589064-5
TCM019PC0DCC10	0-1589064-1
TCM019PC0DXC10	0-1589064-2
TCM019PC2DC003	0-1589064-3
TCM019PC2DC006	0-1589064-4
TCM019PC2DC006B	0-1589688-2
TCM019PC2DC012	0-1589064-6
TCM019PC2DC012B	0-1589688-3
TCM019PC2DC020	1-1589064-4
TCM019PC2DC024	0-1589064-8
TCM019PC2DC036	0-1589064-9
TCM019PC2DC060B	0-1589688-4
TCM019PC2DC066	1-1589064-1
TCM019PC2DCC30	1-1589064-2
TCM019PC2DM006B	0-1589688-1
TCM019PC2DM024	1-1589064-6
TCM019PC2DM036	1-1589064-3
TCM044PC0DM036	1-1589065-3
TCM044PC0DM048	1-1589065-4
TCM044PC0DM060	1-1589065-5
TCM044PC2DC003	0-1589065-1
TCM044PC2DC006	0-1589065-2
TCM044PC2DC006B	0-1589694-1
TCM044PC2DC012	0-1589065-4
TCM044PC2DC012B	0-1589694-2
TCM044PC2DC018B	0-1589694-3
TCM044PC2DC019B	0-1589694-4
TCM044PC2DC020	1-1589065-2
TCM044PC2DC020B	0-1589694-8
TCM044PC2DC024	1-1589065-7

NANONICS Part Number	Tyco Electronics Part Number
TCM044PC2DC036	0-1589065-8
TCM044PC2DC036B	0-1589694-5
TCM044PC2DC202B	0-1589694-7
TCM044PC2DM036	1-1589065-1
TCM044PC2DM120	1-1589065-6
TCM044PC2DM120B	0-1589694-6
TCM044PC2DMC46	1-1589065-0

Catalog 1308940
Revised 9-14

www.te.com

Dimensions are shown for reference purposes only. Specifications subject to change.

Dimensions are in millimeters unless otherwise specified.

USA: +1 800 522 6752
Asia Pacific: +86 0 400 820 6015
UK: +44 800 267 666

For additional support numbers please visit www.te.com

Table of Contents

General Purpose Rectangular (GPR) Connectors
Introduction . . . . . .8-3 to 8-5
Performance Characteristics 8-6
GPRA1 Shell Descriptive Part Numbers and Dimensions 8-7, 8-8
GPRB1 Shell Descriptive Part Numbers and Dimensions 8-9, 8-10
GPRB2 Horizontal Shells . . . . . .8-11 to 8-14
GPRB2 Vertical (Square) Shells 8-15
Insert Descriptive Part Numbers . . . . . .8-16 to 8-21
Insert Arrangements 8-22, 8-23
Insert Assemblies for High Speed Applications . . . . . .8-24 to 8-27
Contacts & Application Tools 8-28, 8-29
Spare Parts & Tools 8-30
EMI Backshells & Strain Reliefs 8-31
Gallery Insert (GAIN) Connectors 8-32
Custom Shells (4 cavity) 8-33
Custom Solutions & In Development Products 8-34
AMPLIMITE Subminiature Connectors
Introduction 8-35, 8-36
Series 109 Standard Density Connectors . . . . . .8-37 to 8-59
Coax Mix Connectors . . . . . .8-60 to 8-66
Series 90 Connectors . . . . . .8-67 to 8-80
ULTRA-LITE Connectors . . . . . .8-81 to 8-86
Application Tooling 8-87
Mating and Mounting Specifications for Series 109 and Series 90 Connectors 8-88
PCB Layouts . . . . . .8-89 to 8-92
Accessories . . . . . .8-93 to 8-96
Part Number Cross References . . . . . .8-97 to 8-103
High Density Rectangular Connectors
Introduction 8-104
Contacts 8-105
Housings . . . . . .8-106 to 8-108
Printed Circuit Board Connector 8-109
Preloaded Housings for Automatic Wiring . . . . . .8-110 to 8-112
Accessories 8-113, 8-114
Application Tooling 8-115, 8-116

Catalog 1308940
Revised 9-14

www.te.com

Dimensions are shown for reference purposes only. Specifications subject to change.

Dimensions are in millimeters unless otherwise specified.

USA: +1 800 522 6752
Asia Pacific: +86 0 400 820 6015
UK: +44 800 267 666

For additional support numbers please visit www.te.com

Table of Contents (Continued)

MTC High-Performance Modular Rectangular Connectors with Removable Contacts
Introduction 8-117
20-Cavity Inserts 8-118, 8-119
5-Cavity Inserts 8-120
Hybrid Inserts 8-121
MTC Shells Ordering Information 8-122
Accessories 8-123
MTCR Size 12 Connectors 8-124, 8-125
EME Shielding Accessories for MTC Connectors 8-126, 8-127
MTC Boxmount Connectors 8-128
MTC Selection Guide 8-129
MTC100 Connectors 8-130, 8-131
MTC50 Connectors 8-132, 8-133
MTCP 20 Cavity Inserts 8-134
MTCT High Performance Modular Rectangular Connectors 8-135, 8-136
Screening 8-137
Application and Installation . . . . . .8-138 to 8-140

"G" Series Modular Connectors
Introduction 8-141, 8-142
Module Specifications 8-143
Multimate Contacts, Type I 8-143
Signal Contacts, Type II and Type III+ 8-144, 8-145
Multimate Contacts
Type VI Contacts 8-146
Type XII Power Contacts 8-147
Miniature Coaxicon Contacts 8-148
Selection Charts 8-149
Coaxial Contacts 8-150, 8-151
Shell Specifications . . . . . .8-152 to 8-154
Accessories 8-155
Application Tooling . . . . . .8-156 to 8-158

Terminal Junction System (MIL-T-81714 and Commercial)
Introduction 8-159
Performance Specifications 8-160
Contacts, Sealing Plugs and Assembly Tools 8-160
Feedback Terminal Junction Modules . . . . . .8-161 to 8-163
Feedthru Terminal Junction Modules 8-161, 8-165
Feedback Grounding Flange Modules 8-166
Wire Splices 8-167
Electronic Module Blocks and Splices . . . . . .8-168 to 8-170
Commercial Electronic Splices 8-171
Electronic Module Blocks and Splices Part Numbering Information 8-172
Military Cross Reference . . . . . .8-173 to 8-179

Introduction

1 Custom 4-cavity receptacle shell

2 GPRB2 vertical shell & strain relief assembly

3 GPRB2 GAIN shell - with spring-loaded, floatmounting design

4 GPRB1 plug shell w/F12 ARINC 801 insert and termini installed

5 F12 ARINC 801 sleeve holder

6 Size 22 posted PC tail pin, Size 20 crimp pin, Size 5 Coax contacts

7 GPRB2 receptacle shell, with 30 & 40 position inserts installed

8 30 position insert with terminated Size 20 Pin contacts installed

9 Custom 40 position pin insert with PC tail contacts installed

10 GPRA plug shell assembly and 14M socket insert assembly

11 GPRA 14M pin insert assembly

This product is sold by TE under license from Radiall S.A.

Dimensions are shown for reference purposes only. Specifications subject to change.

Dimensions are in millimeters unless otherwise specified.

USA: +1 800 522 6752
Asia Pacific: +86 0 400 820 6015
UK: +44 800 267 666

For additional support numbers please visit www.te.com

Introduction

Product Facts

- **A high density solution compared to circular connectors**
  - **Slim shell design with high contact density**
  - **Stackable shells that do not require additional space for locking and unlocking the connectors**
  - **Uses two to three times less space**
- **A versatile solution suitable for disconnect panels or equipment with three mounting styles:**
  - **Rack**
  - **Cable to cable**
  - **Panel mounting**
- **A modular concept with a large variety of options**
  - **Shell can accommodate a wide variety of inserts for signal, power, coax, data bus and fiber optic contacts**
  - **Optional grounding blocks (to meet FAA HIRF requirements)**
  - **Pin and socket inserts can be mounted on either plug or receptacle shells**
- **A cost savings and user friendly solution**
  - **Inserts can be wired in the shop and later installed in the shells**
  - **A common panel cut out eases the connector installation and reduces cost**
  - **Inserts can be easily installed and removed from the shell**
  - **Inserts and shells are keyed to prevent mismating**
  - **Standard MIL tools for contact crimping and contact insertion/extraction**
  - **Field replaceable subassemblies**
  - **Vibration resistant self-locking threads**

A Smart Connector

The General Purpose Rectangular A & B Series connectors complement our ARINC connectors and provide additional flexibility with improved performance in a smaller mating area compared to standard circular Mil-Spec connectors.

The GPRA and GPRB series offer a wide range of solutions based on two insert sizes, a large variety of shells and contacts. GPRA inserts are a good option for low density applications whereas GPRB inserts offer twice the density of GPRA inserts. In addition, the concept is completely modular and expandable.

They can also be easily tailored for custom requirements, such as shell modifications for additional inserts.

Technical Documents

Product Specification:

108-2398

Test Report:

501-734

New Features

Connector Interface

Connectors for Galley Insert (GAIN) Equipment:

- Page 8-32 lists the GPRB2 shells, insert arrangements, contacts, seal plugs, strain reliefs and cable that will be used, per ARINC 810. This is the standard connector interface for new galley equipment such as ovens and beverage makers for new commercial aircraft. This includes the twin-axial cable and contacts needed for the CANbus data bus system used for GAIN

Shells

GPRB1

- Shells have been improved to a greater level of performance under vibration. Also EMI performance has been maintained while eliminating the need for separate EMI springs.

Contacts

Size 22 Socket Contact with integral spring clip

An economy version socket contact is available for size 22 contacts and uses M39029 style interface.

Insert Arrangements

- New insert configurations for high speed data transmission - both fiber and quadrax
- GPRB - Fiber Optics

  F12 - holds up to 12 ARINC 801 fiber optic termini (see page 8-24)

  M2 - holds two 4-channel Mini-Expanded Beam inserts (see page 8-25)
- GPRB - Quadrax/Twinax

  These size 8 quadrax contacts can be used in three insert arrangements - 10Q2, 25Q1 and 3Q3

  These feature the exclusive TE one-piece dielectric that makes our quadrax and twinax contacts the easiest to install. If sealing is required with quadrax or twinax contacts, there is a size 8 seal boot assembly available (see page 8-30). Use of this seal boot provides 50,000 foot altitude immersion protection as tested per Boeing Spec BPS-C-179.
- GPRB - Power

  These inserts all accommodate Size 5 Power Contacts - P3, 13P1, 20P1 and 25P1
- GPRB - Signal

  Features 48 Size 22 contacts in a standard GPRB insert

Note:

Quadrax contacts available for use are listed in our Quadrax catalog #1654012.

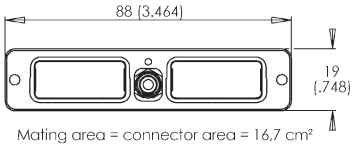

GPRB2 fitted with 80x size 22 contacts

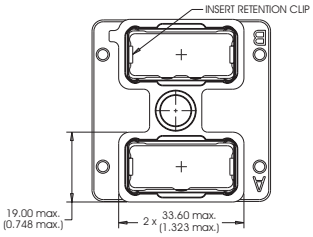

Mating area = connector area = 23.4 cm^2

GPRB2 stacked version

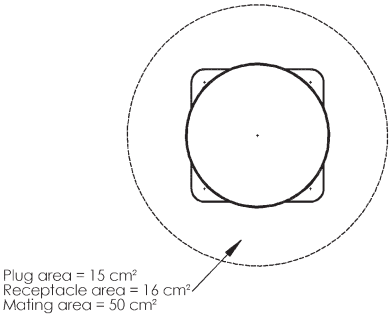

MIL-C-38999 21-35 fitted with 79x size 22 contacts

Dimensions are shown for reference purposes only. Specifications subject to change.

Dimensions are in millimeters unless otherwise specified.

USA: +1 800 522 6752
Asia Pacific: +86 0 400 820 6015
UK: +44 800 267 666

For additional support numbers please visit www.te.com

Introduction (Continued)

GPRA1

2 quarter-turn fasteners

16 keying positions

Max. density:
20 x 22 contacts

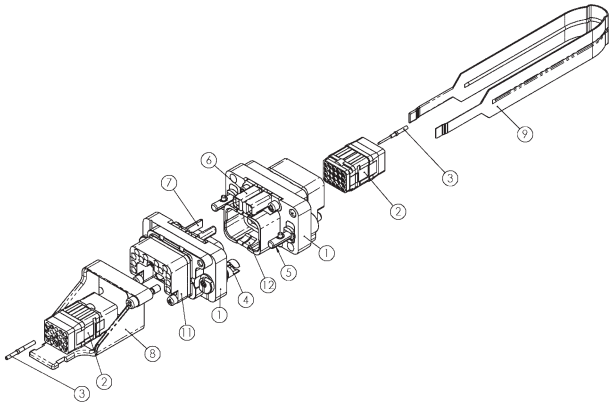

GPRB1

2 quarter-turn fasteners

16 keying positions

Max. density:
40 x 22 contacts

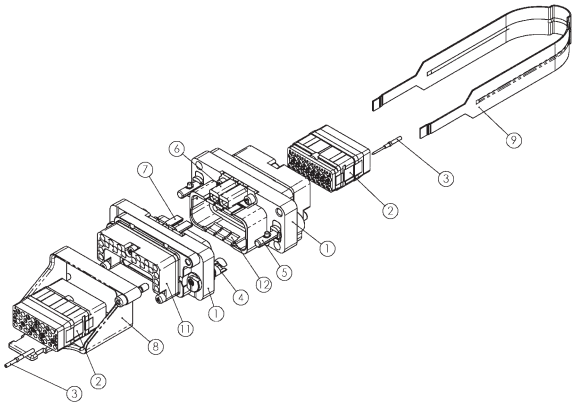

GPRB2

1 central jackscrew/jacknut

12 keying positions

Max. density:
80 x 22 contacts

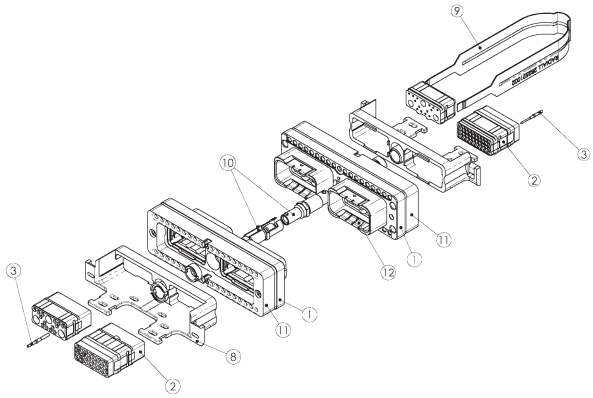

1	shell	8	backshell
2	insert	9	insert insertion/extraction tool
3	contact	10	locking & polarization device
4 & 5	locking device	11	grounding block
6 & 7	polarization device	12	grounding springs

Catalog 1308940
Revised 9-14

www.te.com

Dimensions are shown for reference purposes only. Specifications subject to change.

Dimensions are in millimeters unless otherwise specified.

USA: +1 800 522 6752
Asia Pacific: +86 0 400 820 6015
UK: +44 800 267 666

For additional support numbers please visit www.te.com

Performance Characteristics

Contacts

Electrical characteristics conform to MIL-C-39029 Type A

Electrical Characteristics

Grounding Block Contact

	Contact with Wire Size	Current Amps
Contact to Contact	Contact + 20 AWG	7.5
Contact to Mounting Surface	Contact + 20 AWG	7.5

Contacts

Contact Size		Size of Conductors standard cables	Outer Dia. of Cables (mm)		Current (A) per Contact
Contact	Barrel	AWG	Min.	Max.	
22	22	22	0.86	1.45	5
		24	0.86	1.45	3
		26	0.86	1.45	2
20	20	20	1.02	1.80	7.5
		22	1.02	1.80	5
		24	1.02	1.80	3
18	16	16	1.73	2.62	13
		18	1.73	2.62	13
		20	1.73	2.62	7.5
12	12	12	2.46	3.43	23
		14	2.46	3.43	17
8	8	8	4.80	5.75	46
5[1]	8	8	4.80	5.75	80
		10	4.80	5.75	33

[1] Size 5 contacts are not part of MIL-C-39029 type A.

EMI Shielding Effectiveness

Frequency (MHz)	Leakage Attenuation (dB)
100	65
200	63
300	63
400	62
500	60
600	60

Mechanical Characteristics

Mating/Unmating Durability — 100 cycles

Mating Torque for GPRB2 Jackscrew — 1.2 Nm [11 in. lbs.]

Random Vibration —
GPRA & legacy GPRB1 — 20g (MIL-STD-1344/Method 2005.1, test condition 4)
GPRB1 (new aluminum & composite versions) & GPRB2 — random vibration, 26.4g (rms) (MIL-STD-1344/Method 2005.1, test condition 6, letter G)

Shock — 50g (MIL-STD-1344/Method 2004.1, test condition A)

Environmental Characteristics

Temperature Range — -65°C to +175°C [-85°F to +347°F]

Temperature Life — 1000 h @ 155°C [311°F]

Salt Spray — 96 hours (nickel plating) (MIL-STD-1344/Method 1001.1, test condition A)

Humidity — 10 days

Altitude Immersion — 3 cycles at 15,240 m [50,000 ft.] (MIL-STD-1344/Method 1004.1)

Fluid Immersion — (MIL-STD-1344/Method 1016)

Dielectric Withstanding Voltage (MIL-STD-1344/Method 3001.1.1 with Leakage Current < 1 mΩ)

Level	Voltage (VRMS)
Sea level	1500
15,240 m [50,000 feet]	800

Insulation Resistance (MIL-STD-1344/Method 3003.1)

Ambient Temperature	> 5,000 MΩ
175°C [347°F]	> 200 MΩ

Other Characteristics

Shell to Shell Conductivity — < 2.5 mΩ

Operating Voltage — 400 Vrms or 500 Vdc at sea level

Voltage Stability (Ground Block) — Maximum variation 4mV (MIL-T-81714)

Magnetic Permeability — < 2

Comparative Tracking Index — 250 V

Contact Retention — (MIL-STD-1344/Method 2007.1 on terminated connectors)

Contact Size	Retention Force		Max. Displacement
Ground Block	88 N	[20 lbs.]	0.3 mm [.012 in.]
22	53.4 N	[12 lbs.]	0.38 mm [.015 in.]
20	89 N	[20 lbs.]	0.38 mm [.015 in.]
16	111.2 N	[25 lbs.]	0.38 mm [.015 in.]
12	133.45 N	[30 lbs.]	0.38 mm [.015 in.]

Insert Retention — 500 N [112 lbs.] (MIL-STD-1344/Method 2010.1)

Catalog 1308940
Revised 9-14

www.te.com

Dimensions are shown for reference purposes only. Specifications subject to change.

Dimensions are in millimeters unless otherwise specified.

USA: +1 800 522 6752
Asia Pacific: +86 0 400 820 6015
UK: +44 800 267 666

For additional support numbers please visit www.te.com

GPRA1 Shell Descriptive Part Number Format

Descriptive Part Numbering System

Use this guide to construct descriptive part numbers for GPRA1 shells. Refer to table below for the corresponding TE Connectivity Part Number.

GPRA 1 P B 0 4 N

I – GPRA Series

II – Shell Size

1 — Shell size 1 (1 cavity shell)

III – Shell Style

P — Plug
R — Receptacle
W — Plug with grounding block
Z — Receptacle with grounding block and grounding springs

IV – Modification Code

B — No mounting holes (for plug only)
M — Panel rear mounted connector with 2 x 6.32 UNC mounting holes for receptacle shell only (see note 1)

V – Locking Device

0 — Quarter-turn fastener

VI – Polarization Code

4 — Shell delivered with polarizing hardware unassembled
5 — Shell delivered with no polarizing hardware

VII – Shell Material/Plating

N — Nickel plating (96H Salt spray)

Note 1: Self-locking mounting holes are designed for rear panel mounting.

Size	Style	Modification	Locking Device	Polarization Hardware	Plating	Descriptive Part Number	TE Part Number
1	Plug	No mounting holes	1/4-Turn Fastener	Kit: Shell & Hardware Unassembled	Nickel	GPRA1PB04N	1738228-1
				No Hardware		GPRA1PB05N	1738229-1
	Plug, with Grounding Block			Kit: Shell & Hardware Unassembled		GPRA1WB04N	1738230-1
				No Hardware		GPRA1WB05N	1738231-1
	Receptacle	Rear Panel Mount, with two 6-32 UNC holes		Kit: Shell & Hardware Unassembled		GPRA1RM04N	1738232-1
				No Hardware		GPRA1RM05N	1738233-1
	Receptacle, with Grounding Block & Grounding Springs			Kit: Shell & Hardware Unassembled		GPRA1ZM04N	1738234-1
				No Hardware		GPRA1ZM05N	1738235-1

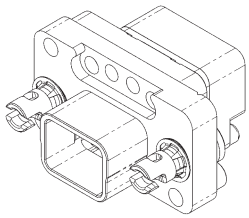

GPRA1WB05N

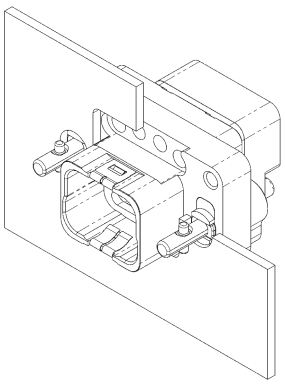

GPRA1ZM05N
Panel Rear Mounted Connector

Dimensions are shown for reference purposes only. Specifications subject to change.

Dimensions are in millimeters unless otherwise specified.

USA: +1 800 522 6752
Asia Pacific: +86 0 400 820 6015
UK: +44 800 267 666

For additional support numbers please visit www.te.com

GPRA1 Shell Dimensions

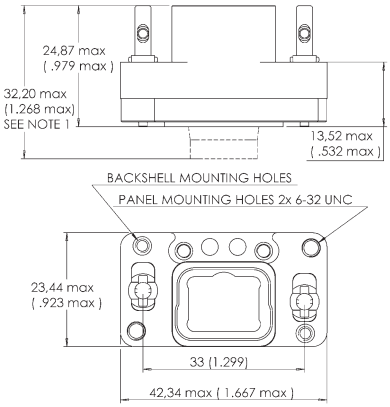

Receptacle Without Grounding Block
GPRA1RM05N

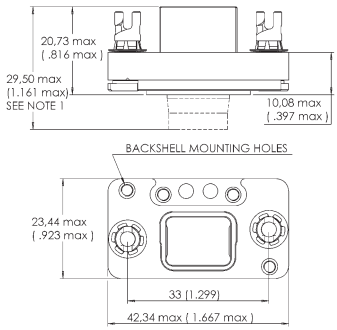

Plug Without Grounding Block
GPRA1PB05N

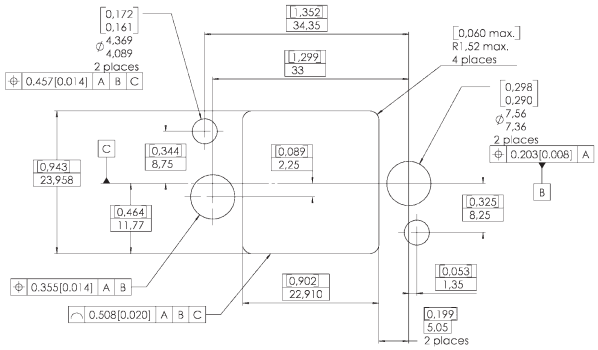

Single Panel Cut Out (See Note 2)

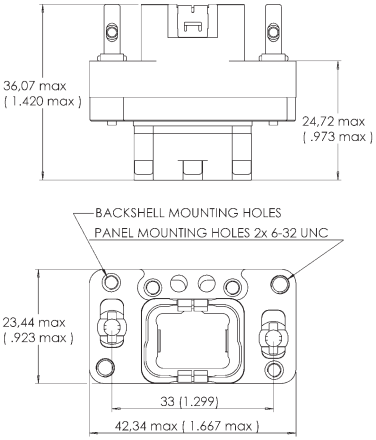

Receptacle
With Grounding Block
GPRA1ZM05N

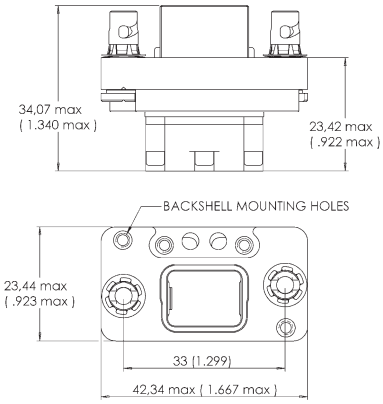

Plug With Grounding Block
GPRA1WB05N

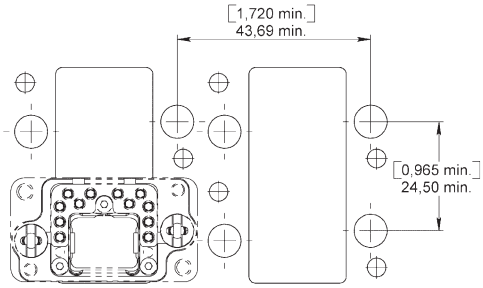

Multiple Panel Cut Out (See Note 2)

Note 1: Maximum dimension for inserts with grommets (Part Number GPRAE and GPRAH)
Note 2: Rear mounting side view with key post oriented to the upper side (receptacle only)

Catalog 1308940
Revised 9-14

www.te.com

Dimensions are shown for reference purposes only. Specifications subject to change.

Dimensions are in millimeters unless otherwise specified.

USA: +1 800 522 6752
Asia Pacific: +86 0 400 820 6015
UK: +44 800 267 666

For additional support numbers please visit www.te.com

GPRB1 Shell Descriptive Part Number Format

Descriptive Part Numbering System

Use this guide to construct descriptive part numbers for GPRB1 shells. Refer to table below for the corresponding TE Part Number.

Note: Legacy designs are not backward compatible with the improved B1 shell designs.

GPRB 1 W B 0 5 K

I – GPRB Series

II – Shell Size

1 — Shell size 1 (1 cavity shell)

III – Shell Style

P — Plug
R — Receptacle
W — Plug with grounding block
Z — Receptacle with ground block and ground fingers

IV – Shell Mounting Option (see note 1)

B — No mounting holes (for plug only)
M — Panel rear mounted connector with 2 x 6.32 UNC mounting holes for receptacle shell only (see note 2)

V – Locking Device

0 — Quarter-turn fastener

VI – Polarization Code

4 — Shell delivered with polarizing hardware unassembled
5 — Shell delivered with no polarizing hardware

VII – Shell Material/Plating

M — Nickel-plated composite
N — Nickel-plated aluminum - Legacy Design
K — Nickel-plated aluminum w/Flexible side wall design

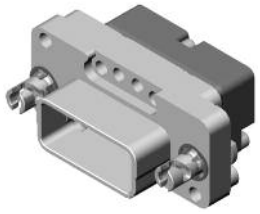

GPRB1WB05N

Note 1: Recommended locking torque: 1.6 Nm (14.161 in-lbs) for metallic shell and 1 Nm (8.85 in-lbs) min. 1.1 Nm (9.73 in-lbs) max. for composite shell.

Note 2: Self-locking mounting holes are designed for rear panel mounting.

Legacy Design - Aluminum

Size	Style	Modification	Locking Device	Polarization Hardware	Shell Material	Descriptive Part Number	TE Part Number
1	Plug	No mounting holes	1/4-Turn Fastener	Kit: Shell & Hardware Unassembled	Aluminum	GPRB1PB04N	1738236-1
				No Hardware		GPRB1PB05N	1738237-1
	Plug, with Grounding Block			Kit: Shell & Hardware Unassembled		GPRB1WB04N	1738238-1
				No Hardware		GPRB1WB05N	1738239-1
	Receptacle	Rear Panel Mount, with two 6-32 UNC holes		Kit: Shell & Hardware Unassembled		GPRB1RM04N	1738240-1
				No Hardware		GPRB1RM05N	1738241-1
	Receptacle, with Grounding Block & Grounding Springs			Kit: Shell & Hardware Unassembled		GPRB1ZM04N	1738242-1
				No Hardware		GPRB1ZM05N	1738243-1

Flexible Sidewall Design - Composite & Aluminum

Size	Style	Modification	Locking Device	Polarization Hardware	Shell Material	Descriptive Part Number	TE Part Number
1	Plug	No mounting holes	1/4-Turn Fastener	Kit: Shell & Hardware Unassembled	Composite	GPRB1PB04M	1811680-1
					Aluminum	—	—
	Plug, with Grounding Block				Composite	GPRB1WB04M	1954285-1
					Aluminum	GPRB1WB04K	1877943-1
	Receptacle	Rear Panel Mount, with two 6-32 UNC holes			Composite	GPRB1RM04M	2000142-1
					Aluminum	—	—
	Receptacle, with Grounding Block & Grounding Springs				Composite	GPRB1ZM04M	1954284-1
					Aluminum	GPRB1ZM04K	1877945-1

Catalog 1308940
Revised 9-14

www.te.com

Dimensions are shown for reference purposes only. Specifications subject to change.

Dimensions are in millimeters unless otherwise specified.

USA: +1 800 522 6752
Asia Pacific: +86 0 400 820 6015
UK: +44 800 267 666

For additional support numbers please visit www.te.com

GPRB1 Shell Dimensions - Flexible Sidewall Design

Product Facts

- **A high density solution compared to circular connectors**
  - **Shell-to-shell grounding with integral grounding springs - does not require separate spring clip components**
- **Improved vibration performance**
- **New 1/4-turn fastener profile with reduced risk of breakage**
- **L-shaped keys – easier to install and remove, each face is identified, shape decrease risk of incorrect assembly**

Without grounding block

Receptacle **Plug**

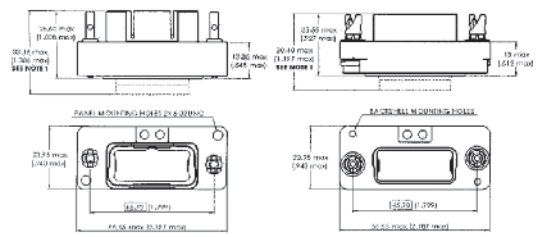

Single panel cut out
See Note 2

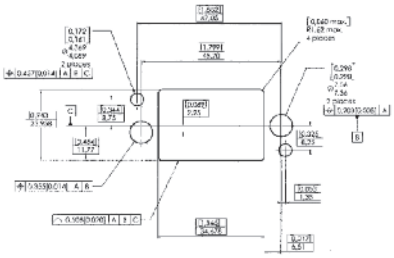

With grounding block

Receptacle **Plug**

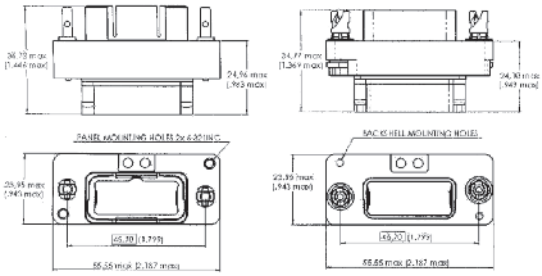

Multiple panel cut out
See Note 2

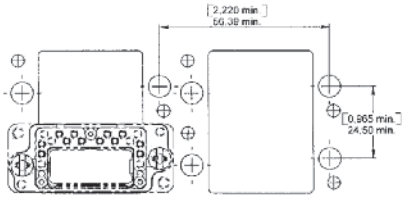

Note 1: Maximum dimension for inserts with grommets (Part Number GPRBE and GPRBH)
For inserts without grommets, max. dimensions will be for the receptacle 25.55 mm - 1.006 in. and for the plug 23.52 mm - .926 in.

For inserts with optical contacts F12 and 12F6, the max. dimensions will be for the receptacle 38.70 mm - 1.524 in. and for the plug 36.00 mm - 1.148 in.

Note 2: Rear mounting side view with key post oriented to the upper side (receptacle only)

Dimensions are shown for reference purposes only. Specifications subject to change.

Dimensions are in millimeters unless otherwise specified.

USA: +1 800 522 6752
Asia Pacific: +86 0 400 820 6015
UK: +44 800 267 666

For additional support numbers please visit www.te.com

GPRB2 (Horizontal) Shell Descriptive Part Number Format

Descriptive Part Numbering System

Use this guide to construct descriptive part numbers for GPRB2 shells. Refer to page 8-12 for the corresponding TE Part Number.

GPRB 2 P B 1 2 N

I – GPRB Series

II – Shell Size

2 — Shell size 2 (2 cavities shell)

III – Shell Style

P — Plug (see note 1)
H — Receptacle with grounding springs (see note 1)
W — Plug with grounding block (see note 2)
Z — Receptacle with grounding block and grounding springs (see note 2)
L — Receptacle with flange and grounding springs (see note 1)

IV – Modification Code

A — Panel rear mounted connector with 4 x 6.32 UNC mounting holes (see note 3)
B — No mounting holes
F — Panel rear mounted w/2 x 6.32 UNC mounting holes (see note 3)
D — Connector with 2 x Ø 3.10 mm thru holes
L — Panel rear mounted connector with 2 x 4.40 UNC mounting holes (see note 3)

V – Locking & Polarizing Device

1 — Jackscrew (see note 4)
2 — Jacknut (see note 4)
3 — Without locking device (see note 5)
4 — Polarizing Guide Post for Rack and Panel application (see note 6)
5 — Polarizing Guide Socket for Rack and Panel application (see note 6)

VI – Polarization Code

2 — Polarizing device A to F delivered unassembled (see note 7)
3 — Polarizing device N to Z delivered unassembled (see note 7)

VII – Shell Material/Plating

M — Nickel plated composite *
N — Nickel plating (96H Salt spray)

Notes:
1. The standard modification codes for these shells are B, D or L.
2. With modification codes A or B only.
3. Self-locking mounting holes are designed for rear panel mounting.
4. Jackscrew/Jacknut can be mounted on either plug or receptacle shell. However, the standard options are:
   —Jackscrew for plug shells
   —Jacknut for receptacle shells
5. Option 3 in paragraph V cancels the polarization code paragraph IV, i.e. the shell is delivered with no polarizing device.
6. Pin/Socket polarization guides can be mounted on either plug or receptacle shells. However, the standard options are:
   —Pin polarization guide for plug shells
   —Socket polarization guide for receptacle shells
7. Polarizing device is delivered unassembled, it must be locked with resin by the user (LOCTITE™ 272 must be used).
   —if no polarizing device is required, omit this step and go to VII.

*Contact TE Connectivity

Catalog 1308940
Revised 9-14

www.te.com

Dimensions are shown for reference purposes only. Specifications subject to change.

Dimensions are in millimeters unless otherwise specified.

USA: +1 800 522 6752
Asia Pacific: +86 0 400 820 6015
UK: +44 800 267 666

For additional support numbers please visit www.te.com

GPRB2 (Horizontal) Shell Descriptive Part Number Format (Continued)

Size	Style	Modification	Locking & Polarization Device	Polarization Hardware	Plating	Descriptive Part Number	TE Part Number
2	Plug	No mounting holes	N/A	N/A	Nickel	GPRB2PB3N	1738244-1
			Jackscrew	Kit: Shell & A-F Hardware Unassembled		GPRB2PB12N	1738245-1
				Kit: Shell & N-Z Hardware Unassembled		GPRB2PB13N	1738246-1
			Polarizing Guide Post	Kit: Shell & A-F Hardware Unassembled		GPRB2PB42N	1738247-1
				Kit: Shell & N-Z Hardware Unassembled		GPRB2PB43N	1738248-1
		Connector with two thru-holes [3.10 mm Dia.]	N/A	N/A		GPRB2PD3N	1738249-1
			Jackscrew	Kit: Shell & A-F Hardware Unassembled		GPRB2PD12N	1738250-1
				Kit: Shell & N-Z Hardware Unassembled		GPRB2PD13N	1738251-1
			Polarizing Guide Post	Kit: Shell & A-F Hardware Unassembled		GPRB2PD42N	1738252-1
				Kit: Shell & N-Z Hardware Unassembled		GPRB2PD43N	1738253-1
		Rear Panel Mount, with two 4-40 UNC holes	N/A	N/A		GPRB2PL3N	1738254-1
			Jackscrew	Kit: Shell & A-F Hardware Unassembled		GPRB2PL12N	1738255-1
				Kit: Shell & N-Z Hardware Unassembled		GPRB2PL13N	1738256-1
			Polarizing Guide Post	Kit: Shell & A-F Hardware Unassembled		GPRB2PL42N	1738257-1
				Kit: Shell & N-Z Hardware Unassembled		GPRB2PL43N	1738258-1
	Plug, with Grounding Block	No mounting holes	N/A	N/A		GPRB2WB3N	1738259-1
			Jackscrew	Kit: Shell & A-F Hardware Unassembled		GPRB2WB12N	1738260-1
				Kit: Shell & N-Z Hardware Unassembled		GPRB2WB13N	1738261-1
			Polarizing Guide Post	Kit: Shell & A-F Hardware Unassembled		GPRB2WB42N	1738262-1
				Kit: Shell & N-Z Hardware Unassembled		GPRB2WB43N	1738263-1
		Rear Panel Mount, with four 6-32 UNC holes	N/A	N/A		GPRB2WA3N	1738264-1
			Jackscrew	Kit: Shell & A-F Hardware Unassembled		GPRB2WA12N	1738265-1
				Kit: Shell & N-Z Hardware Unassembled		GPRB2WA13N	1738266-1
			Polarizing Guide Post	Kit: Shell & A-F Hardware Unassembled		GPRB2WA42N	1738267-1
				Kit: Shell & N-Z Hardware Unassembled		GPRB2WA43N	1738268-1
	Receptacle, with Grounding Springs	No mounting holes	N/A	N/A		GPRB2HB3N	1738269-1
			Jacknut	Kit: Shell & A-F Hardware Unassembled		GPRB2HB22N	1738270-1
				Kit: Shell & N-Z Hardware Unassembled		GPRB2HB23N	1738271-1
			Polarizing Guide Socket	Kit: Shell & A-F Hardware Unassembled		GPRB2HB52N	1738272-1
				Kit: Shell & N-Z Hardware Unassembled		GPRB2HB53N	1738273-1
		Connector with two thru-holes [3.10 mm Dia.]	N/A	N/A		GPRB2HD3N	1738274-1
			Jacknut	Kit: Shell & A-F Hardware Unassembled		GPRB2HD22N	1738275-1
				Kit: Shell & N-Z Hardware Unassembled		GPRB2HD23N	1738276-1
			Polarizing Guide Socket	Kit: Shell & A-F Hardware Unassembled		GPRB2HD52N	1738277-1
				Kit: Shell & N-Z Hardware Unassembled		GPRB2HD53N	1738278-1
		Rear Panel Mount, with two 4-40 UNC holes	N/A	N/A		GPRB2HL3N	1738279-1
			Jacknut	Kit: Shell & A-F Hardware Unassembled		GPRB2HL22N	1738280-1
				Kit: Shell & N-Z Hardware Unassembled		GPRB2HL23N	1738281-1
			Polarizing Guide Socket	Kit: Shell & A-F Hardware Unassembled		GPRB2HL52N	1738282-1
				Kit: Shell & N-Z Hardware Unassembled		GPRB2HL53N	1738283-1
		Rear Panel Mount, with two 6-32 UNC holes	N/A	N/A		GPRB2HF3N	1738279-2
			Jacknut	Kit: Shell & A-F Hardware Unassembled		GPRB2HF22N	1738280-2
				Kit: Shell & N-Z Hardware Unassembled		GPRB2HF23N	1738281-2
			Polarizing Guide Socket	Kit: Shell & A-F Hardware Unassembled		GPRB2HF52N	1738282-2
				Kit: Shell & N-Z Hardware Unassembled		GPRB2HF53N	1738283-2
	Receptacle, with Flange & Grounding Springs	No mounting holes	N/A	N/A		GPRB2LB3N	1738284-1
			Jacknut	Kit: Shell & A-F Hardware Unassembled		GPRB2LB22N	1738285-1
				Kit: Shell & N-Z Hardware Unassembled		GPRB2LB23N	1738286-1
			Polarizing Guide Socket	Kit: Shell & A-F Hardware Unassembled		GPRB2LB52N	1738287-1
				Kit: Shell & N-Z Hardware Unassembled		GPRB2LB53N	1738288-1
		Connector with two thru-holes [3.10 mm Dia.]	N/A	N/A		GPRB2LD3N	1738289-1
			Jacknut	Kit: Shell & A-F Hardware Unassembled		GPRB2LD22N	1738290-1
				Kit: Shell & N-Z Hardware Unassembled		GPRB2LD23N	1738291-1
			Polarizing Guide Socket	Kit: Shell & A-F Hardware Unassembled		GPRB2LD52N	1738292-1
				Kit: Shell & N-Z Hardware Unassembled		GPRB2LD53N	1738293-1
		Mount, with two 4-40 UNC holes	N/A	N/A		GPRB2LL3N	1738294-1
			Jacknut	Kit: Shell & A-F Hardware Unassembled		GPRB2LL22N	1738295-1
				Kit: Shell & N-Z Hardware Unassembled		GPRB2LL23N	1738296-1
			Polarizing Guide Socket	Kit: Shell & A-F Hardware Unassembled		GPRB2LL52N	1738297-1
				Kit: Shell & N-Z Hardware Unassembled		GPRB2LL53N	1738298-1
		Rear Panel Mount, with two 6-32 UNC holes	N/A	N/A		GPRB2LF3N	1738294-2
			Jacknut	Kit: Shell & A-F Hardware Unassembled		GPRB2LF22N	1738295-2
				Kit: Shell & N-Z Hardware Unassembled		GPRB2LF23N	1738296-2
			Polarizing Guide Socket	Kit: Shell & A-F Hardware Unassembled		GPRB2LF52N	1738297-2
				Kit: Shell & N-Z Hardware Unassembled		GPRB2LF53N	1738298-2

Catalog 1308940
Revised 9-14

www.te.com

Dimensions are shown for reference purposes only. Specifications subject to change.

Dimensions are in millimeters unless otherwise specified.

USA: +1 800 522 6752
Asia Pacific: +86 0 400 820 6015
UK: +44 800 267 666

For additional support numbers please visit www.te.com

GPRB2 (Horizontal) Shell Descriptive Part Number Format (Continued)

Size	Style	Modification	Locking & Polarization Device	Polarization Hardware	Plating	Descriptive Part Number	TE Part Number
2	Receptacle, with Grounding Block & Grounding Springs	No mounting holes	N/A	N/A	Nickel	GPRB2ZB3N	1738299-1
			Jacknut	Kit: Shell & A-F Hardware Unassembled		GPRB2ZB22N	1738300-1
				Kit: Shell & N-Z Hardware Unassembled		GPRB2ZB23N	1738301-1
			Polarizing Guide Socket	Kit: Shell & A-F Hardware Unassembled		GPRB2ZB52N	1738302-1
				Kit: Shell & N-Z Hardware Unassembled		GPRB2ZB53N	1738303-1
		Rear Panel Mount, with four 6-32 UNC holes	N/A	N/A		GPRB2ZA3N	1738304-1
			Jacknut	Kit: Shell & A-F Hardware Unassembled		GPRB2ZA22N	1738305-1
				Kit: Shell & N-Z Hardware Unassembled		GPRB2ZA23N	1738306-1
			Polarizing Guide Socket	Kit: Shell & A-F Hardware Unassembled		GPRB2ZA52N	1738307-1
				Kit: Shell & N-Z Hardware Unassembled		GPRB2ZA53N	1738308-1

GPRB2 (Horizontal) Shell Dimensions

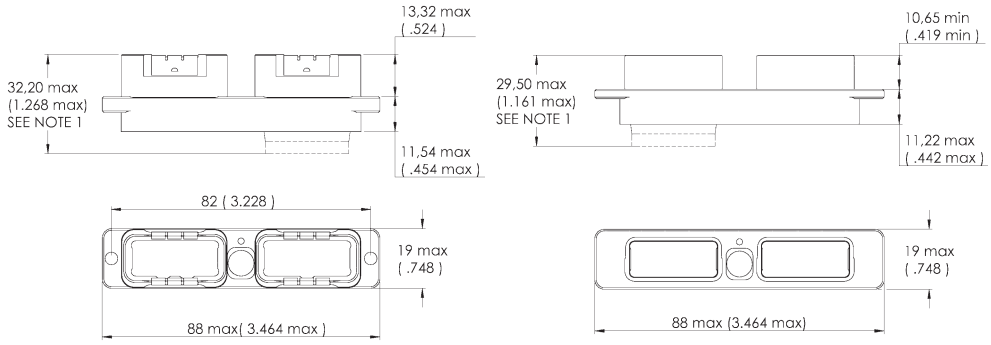

Receptacle Without Grounding Block
GPRB2HD3N

Plug Without Grounding Block
GPRB2PB3N

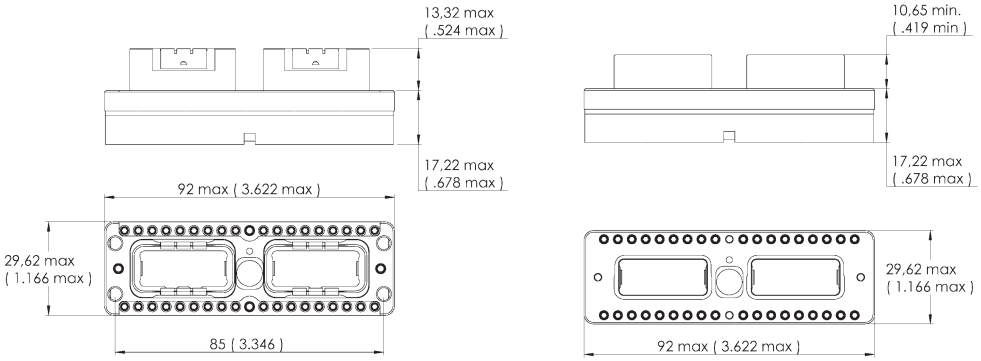

Receptacle
With Grounding Block
GPRB2ZA3N

Plug
With Grounding Block
GPRB2WB3N

Grounding Block

A solution for high-intensity radiated electromagnetic frequencies. The patented design provides a direct grounding to the shell.

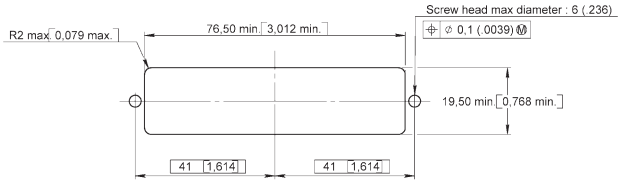

Panel Cut Out
Modification Code D and L

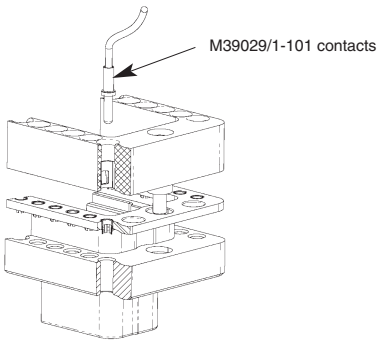

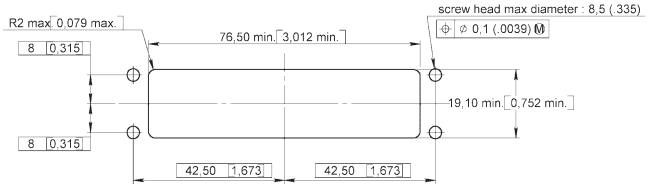

Panel Cut Out
Modification Code A

Note 1: Maximum dimension for inserts with grommets (Part Number GPRBE and GPRBH)

Catalog 1308940
Revised 9-14

www.te.com

Dimensions are shown for reference purposes only. Specifications subject to change.

Dimensions are in millimeters unless otherwise specified.

USA: +1 800 522 6752
Asia Pacific: +86 0 400 820 6015
UK: +44 800 267 666

For additional support numbers please visit www.te.com

GPRB2 Vertical (Square) Shell and Strain Relief Dimensions

Shell Kits with Two Cavities for Key-A Inserts

[1]Kit: Shell & A-F hardware unassembled
[2]Assembly: Hardware assembled in polarization position E

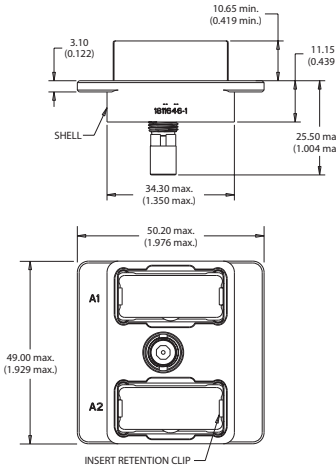

Plug Shell, Vertical
GPRB2
1877719-1[1]
1811646-1[2]

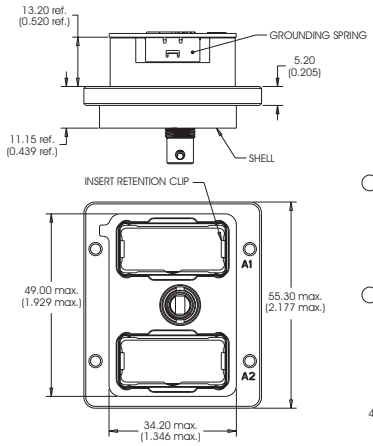

Receptacle Shell, Vertical
GPRB2
1877720-1[1]
1811648-1[2]

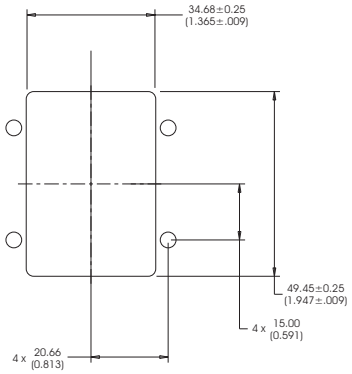

Recommended Panel Cutout

Shell Kits with Two Cavities for Key-A and Key-B Inserts

[1]Kit: Shell & A-F hardware unassembled

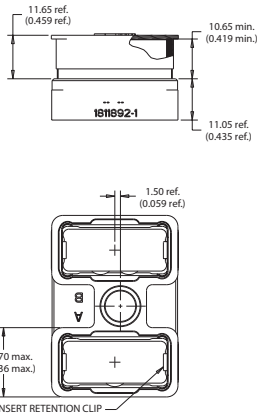

Plug Shell Kit, Vertical with A-F Jackscrew
GPRB2
1811892-1[1]

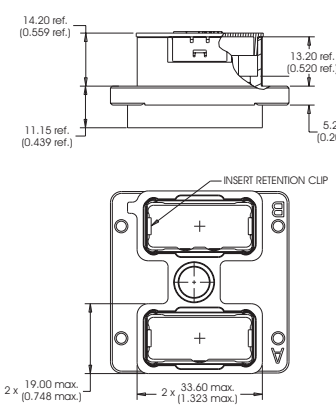

Receptacle Shell Kit, Vertical,
Rear Panel Mount, with A-F Jackscrew
GPRB2
1811894-1[1]

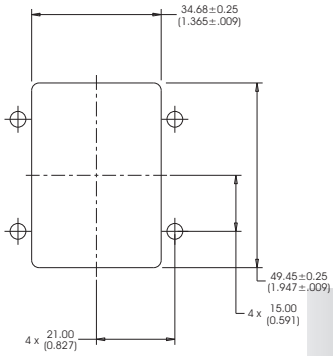

Recommended Panel Cutout

Strain Relief Kit, Vertical GPRB2

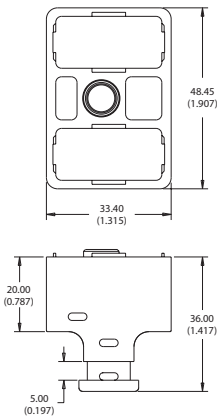

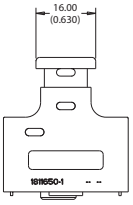

1811650-1

Catalog 1308940
Revised 9-14

www.te.com

Dimensions are shown for reference purposes only. Specifications subject to change.

Dimensions are in millimeters unless otherwise specified.

USA: +1 800 522 6752
Asia Pacific: +86 0 400 820 6015
UK: +44 800 267 666

For additional support numbers please visit www.te.com

Insert Descriptive Part Number Format

Descriptive Part Numbering System

Use this guide to construct descriptive part numbers for GPRA & B inserts. Refer to pages 8-16 to 8-19 for the corresponding TE Part Number.

GPRA E 20 P A

GPRA Series

Inserts for GPRA1 shells (see note 1 and 3)

Class

E — Environmental with rear grommet and interfacial seal for pin inserts
Environmental with rear grommet for socket inserts
N — Non environmental (no rear grommet, no interfacial seal)
H — Inserts for pin contacts with a rear grommet and without interfacial seal
T* — Inserts for pin contacts without a rear grommet and with interfacial seal

Contact arrangement

00 - 1C1 - 04 - 09 - 14 - 14M - 17 - 20 - F5

Contact Type

P — Pin
S — Socket

Insert Keying

A keying only

GPRB E 40 P B

GPRB Series

Inserts for GPRB1 and GPRB2 shells (see note 1 and 3)

Class

E — Environmental with rear grommet and interfacial seal for pin inserts
Environmental with rear grommet for socket inserts
N — Non environmental (no rear grommet, no interfacial seal)
H — Inserts for pin contacts with a rear grommet and without interfacial seal
T* — Inserts for pin contacts without a rear grommet and with interfacial seal

Contact arrangement

00 - 06 - C3 - P3 - 10Q2 - 3Q3 - 12F6 - 13C1 - 13P1 - 14 - 17 - 20C1 - 20P1 - 22 - 22V - 25P1 - 25Q1 - 28 - 30 - 34 - 40 - F12 - F12C - M2

Contact Type

P — Pin
S — Socket

Insert Keying

A — Insert with keying A (see note 2)
B — Insert with keying B (see note 2)

Notes: 1. Inserts are designed for rear release contacts.
2. For GPRB2 shells, use one insert keyed A and one insert keyed B.
For GPRB1 shells, use one insert keyed A only.
3. Pin and socket inserts can be installed in either plug or receptacle shell.

*Contact TE

Catalog 1308940
Revised 9-14

www.te.com

Dimensions are shown for reference purposes only. Specifications subject to change.

Dimensions are in millimeters unless otherwise specified.

USA: +1 800 522 6752
Asia Pacific: +86 0 400 820 6015
UK: +44 800 267 666

For additional support numbers please visit www.te.com

Insert Descriptive Part Number Format (Continued)

GPRA Insert Part Numbers

Series	Contact Arrangement	Contact Type	Classification	Keying	Descriptive Part Number	TE Part Number
A	00	N/A	Dummy Insert	N/A	GPRAN00	1738049-1
	1C1	Pin	Environmental, with Rear Grommet & Interfacial Seal	A	GPRAE1C1PA	1738050-1
			Insert with Rear Grommet, without Interfacial Seal		GPRAH1C1PA	1738051-1
			Non-environmental (no Grommet or Seal)		GPRAN1C1PA	1738052-1
		Socket	Environmental, with Rear Grommet		GPRAE1C1SA	1738053-1
			Non-environmental (no Grommet or Seal)		GPRAN1C1SA	1738054-1
	04	Pin	Environmental, with Rear Grommet & Interfacial Seal		GPRAE04PA	1738055-1
			Insert with Rear Grommet, without Interfacial Seal		GPRAH04PA	1738056-1
			Non-environmental (no Grommet or Seal)		GPRAN04PA	1738057-1
		Socket	Environmental, with Rear Grommet		GPRAE04SA	1738058-1
			Non-environmental (no Grommet or Seal)		GPRAN04SA	1738059-1
	09	Pin	Environmental, with Rear Grommet & Interfacial Seal		GPRAE09PA	1738060-1
			Insert with Rear Grommet, without Interfacial Seal		GPRAH09PA	1738061-1
			Non-environmental (no Grommet or Seal)		GPRAN09PA	1738062-1
		Socket	Environmental, with Rear Grommet		GPRAE09SA	1738063-1
			Non-environmental (no Grommet or Seal)		GPRAN09SA	1738064-1
	14	Pin	Environmental, with Rear Grommet & Interfacial Seal		GPRAE14PA	1738065-1
			Insert with Rear Grommet, without Interfacial Seal		GPRAH14PA	1738066-1
			Non-environmental (no Grommet or Seal)		GPRAN14PA	1738067-1
		Socket	Environmental, with Rear Grommet		GPRAE14SA	1738068-1
			Non-environmental (no Grommet or Seal)		GPRAN14SA	1738069-1
	14M	Pin	Environmental, with Rear Grommet & Interfacial Seal		GPRAE14MPA	1738070-1
			Insert with Rear Grommet, without Interfacial Seal		GPRAH14MPA	1738071-1
			Non-environmental (no Grommet or Seal)		GPRAN14MPA	1738072-1
		Socket	Environmental, with Rear Grommet		GPRAE14MSA	1738073-1
			Non-environmental (no Grommet or Seal)		GPRAN14MSA	1738074-1
	17	Pin	Environmental, with Rear Grommet & Interfacial Seal		GPRAE17PA	1738075-1
			Insert with Rear Grommet, without Interfacial Seal		GPRAH17PA	1738076-1
			Non-environmental (no Grommet or Seal)		GPRAN17PA	1738077-1
		Socket	Environmental, with Rear Grommet		GPRAE17SA	1738078-1
			Non-environmental (no Grommet or Seal)		GPRAN17SA	1738079-1
	20	Pin	Environmental, with Rear Grommet & Interfacial Seal		GPRAE20PA	1738080-1
			Insert with Rear Grommet, without Interfacial Seal		GPRAH20PA	1738081-1
			Non-environmental (no Grommet or Seal)		GPRAN20PA	1738082-1
		Socket	Environmental, with Rear Grommet		GPRAE20SA	1738083-1
			Non-environmental (no Grommet or Seal)		GPRAN20SA	1738084-1
	F5	ARINC 801 Termini	Environmental, without Sleeve Holder		GPRAEF5PA	1954043-1
			Environmental, with Sleeve Holder		GPRAEF5SA	1954044-1

Insert Descriptive Part Number Format (Continued)

GPRB Insert Part Numbers

Series	Contact Arrangement	Contact Type	Classification	Keying	Descriptive Part Number	TE Part Number
B	00	N/A	Dummy Insert	N/A	GPRBN00	1738085-1
	C3	Pin	Environmental, with Rear Grommet & Interfacial Seal	A	GPRBEC3PA	1738086-1
				B	GPRBEC3PB	1738091-1
			Insert with Rear Grommet, without Interfacial Seal	A	GPRBHC3PA	1738087-1
				B	GPRBHC3PB	1738092-1
			Non-environmental (no Grommet or Seal)	A	GPRBNC3PA	1738088-1
				B	GPRBNC3PB	1738093-1
		Socket	Environmental, with Rear Grommet	A	GPRBEC3SA	1738089-1
				B	GPRBEC3SB	1738094-1
			Non-environmental (no Grommet or Seal)	A	GPRBNC3SA	1738090-1
				B	GPRBNC3SB	1738095-1
	P3	Pin	Environmental, with Rear Grommet & Interfacial Seal	A	GPRBEP3PA	1954321-1
				B	GPRBEP3PB	1954322-1
			Insert with Rear Grommet, without Interfacial Seal	A	GPRBHP3PA	1954724-1
				B	GPRBHP3PB	1954739-1
			Non-environmental (no Grommet or Seal)	A	GPRBNP3PA	1954325-1
				B	GPRBNP3PB	1954326-1
		Socket	Environmental, with Rear Grommet	A	GPRBEP3SA	1954327-1
				B	GPRBEP3SB	1954328-1
			Non-environmental (no Grommet or Seal)	A	GPRBNP3SA	1954329-1
				B	GPRBNP3SB	1954330-1
	06	Pin	Environmental, with Rear Grommet & Interfacial Seal	A	GPRBE06PA	1738096-1
				B	GPRBE06PB	1738101-1
			Insert with Rear Grommet, without Interfacial Seal	A	GPRBH06PA	1738096-2
				B	GPRBH06PB	1738101-3
			Non-environmental (no Grommet or Seal)	A	GPRBN06PA	1738096-3
				B	GPRBN06PB	1738101-4
		Socket	Environmental, with Rear Grommet	A	GPRBE06SA	1738099-1
				B	GPRBE06SB	1738104-1
			Non-environmental (no Grommet or Seal)	A	GPRBN06SA	1738099-2
				B	GPRBN06SB	1738104-2
	13C1	Pin	Environmental, with Rear Grommet & Interfacial Seal	A	GPRBE13C1PA	1738106-1
				B	GPRBE13C1PB	1738111-1
			Insert with Rear Grommet, without Interfacial Seal	A	GPRBH13C1PA	1738107-1
				B	GPRBH13C1PB	1738112-1
			Non-environmental (no Grommet or Seal)	A	GPRBN13C1PA	1738108-1
				B	GPRBN13C1PB	1738113-1
		Socket	Environmental, with Rear Grommet	A	GPRBE13C1SA	1738109-1
				B	GPRBE13C1SB	1738114-1
			Non-environmental (no Grommet or Seal)	A	GPRBN13C1SA	1738110-1
				B	GPRBN13C1SB	1738115-1
	13P1	Pin	Environmental, with Rear Grommet & Interfacial Seal	A	GPRBE13P1PA	1954331-1
				B	GPRBE13P1PB	1954332-1
			Insert with Rear Grommet, without Interfacial Seal	A	GPRBH13P1PA	1954333-1
				B	GPRBH13P1PB	1954334-1
			Non-environmental (no Grommet or Seal)	A	GPRBN13P1PA	1954335-1
				B	GPRBN13P1PB	1954336-1
		Socket	Environmental, with Rear Grommet	A	GPRBE13P1SA	1954337-1
				B	GPRBE13P1SB	1954338-1
			Non-environmental (no Grommet or Seal)	A	GPRBN13P1SA	1954339-1
				B	GPRBN13P1SB	1954340-1

Dimensions are shown for reference purposes only. Specifications subject to change.

Dimensions are in millimeters unless otherwise specified.

USA: +1 800 522 6752
Asia Pacific: +86 0 400 820 6015
UK: +44 800 267 666

For additional support numbers please visit www.te.com

Insert Descriptive Part Number Format (Continued)

GPRB Insert Part Numbers (Continued)

Series	Contact Arrangement	Contact Type	Classification	Keying	Descriptive Part Number	TE Part Number
B	14	Pin	Environmental, with Rear Grommet & Interfacial Seal	A	GPRBE14PA	1738116-1
				B	GPRBE14PB	1738121-1
			Insert with Rear Grommet, without Interfacial Seal	A	GPRBH14PA	1738117-1
				B	GPRBH14PB	1738122-1
			Non-environmental (no Grommet or Seal)	A	GPRBN14PA	1738118-1
				B	GPRBN14PB	1738123-1
		Socket	Environmental, with Rear Grommet	A	GPRBE14SA	1738119-1
				B	GPRBE14SB	1738124-1
			Non-environmental (no Grommet or Seal)	A	GPRBN14SA	1738120-1
				B	GPRBN14SB	1738125-1
	17	Pin	Environmental, with Rear Grommet & Interfacial Seal	A	GPRBE17PA	1738126-1
				B	GPRBE17PB	1738131-1
			Insert with Rear Grommet, without Interfacial Seal	A	GPRBH17PA	1738127-1
				B	GPRBH17PB	1738132-1
			Non-environmental (no Grommet or Seal)	A	GPRBN17PA	1738128-1
				B	GPRBN17PB	1738133-1
		Socket	Environmental, with Rear Grommet	A	GPRBE17SA	1738129-1
				B	GPRBE17SB	1738134-1
			Non-environmental (no Grommet or Seal)	A	GPRBN17SA	1738130-1
				B	GPRBN17SB	1738135-1
	20C1	Pin	Environmental, with Rear Grommet & Interfacial Seal	A	GPRBE20C1PA	1738136-1
				B	GPRBE20C1PB	1738141-1
			Insert with Rear Grommet, without Interfacial Seal	A	GPRBH20C1PA	1738137-1
				B	GPRBH20C1PB	1738142-1
			Non-environmental (no Grommet or Seal)	A	GPRBN20C1PA	1738138-1
				B	GPRBN20C1PB	1738143-1
		Socket	Environmental, with Rear Grommet	A	GPRBE20C1SA	1738139-1
				B	GPRBE20C1SB	1738144-1
			Non-environmental (no Grommet or Seal)	A	GPRBN20C1SA	1738140-1
				B	GPRBN20C1SB	1738145-1
	20P1	Pin	Environmental, with Rear Grommet & Interfacial Seal	A	GPRBE20P1PA	1954341-1
				B	GPRBE20P1PB	1954342-1
			Insert with Rear Grommet, without Interfacial Seal	A	GPRBH20P1PA	1954723-1
				B	GPRBH20P1PB	1954344-1
			Non-environmental (no Grommet or Seal)	A	GPRBN20P1PA	1954345-1
				B	GPRBN20P1PB	1954346-1
		Socket	Environmental, with Rear Grommet	A	GPRBE20P1SA	1954347-1
				B	GPRBE20P1SB	1954348-1
			Non-environmental (no Grommet or Seal)	A	GPRBN20P1SA	1954349-1
				B	GPRBN20P1SB	1954350-1
	22	Pin	Environmental, with Rear Grommet & Interfacial Seal	A	GPRBE22PA	1738146-1
				B	GPRBE22PB	1738151-1
			Insert with Rear Grommet, without Interfacial Seal	A	GPRBH22PA	1738146-2
				B	GPRBH22PB	1738151-2
			Non-environmental (no Grommet or Seal)	A	GPRBN22PA	1738146-3
				B	GPRBN22PB	1738151-3
		Socket	Environmental, with Rear Grommet	A	GPRBE22SA	1738149-1
				B	GPRBE22SB	1738154-1
			Non-environmental (no Grommet or Seal)	A	GPRBN22SA	1738149-2
				B	GPRBN22SB	1738154-2
	22V	Pin	Environmental, with Rear Grommet & Interfacial Seal	A	GPRBE22VPA	2033990-1
				B	GPRBE22VPB	2033995-1
		Socket	Environmental, with Rear Grommet	A	GPRBE22VSA	2000126-1
				B	GPRVE22VSB	2033996-1

Dimensions are shown for reference purposes only. Specifications subject to change.

Dimensions are in millimeters unless otherwise specified.

USA: +1 800 522 6752
Asia Pacific: +86 0 400 820 6015
UK: +44 800 267 666

For additional support numbers please visit www.te.com

Insert Descriptive Part Number Format (Continued)

GPRB Insert Part Numbers (Continued)

Series	Contact Arrangement	Contact Type	Classification	Keying	Descriptive Part Number	TE Part Number
B	28	Pin	Environmental, with Rear Grommet & Interfacial Seal	A	GPRBE28PA	1738156-1
				B	GPRBE28PB	1738161-1
			Insert with Rear Grommet, without Interfacial Seal	A	GPRBH28PA	1738157-1
				B	GPRBH28PB	1738162-1
			Non-environmental (no Grommet or Seal)	A	GPRBN28PA	1738158-1
				B	GPRBN28PB	1738163-1
		Socket	Environmental, with Rear Grommet	A	GPRBE28SA	1738159-1
				B	GPRBE28SB	1738164-1
			Non-environmental (no Grommet or Seal)	A	GPRBN28SA	1738160-1
				B	GPRBN28SB	1738165-1
	30	Pin	Environmental, with Rear Grommet & Interfacial Seal	A	GPRBE30PA	1738166-1
				B	GPRBE30PB	1738171-1
			Insert with Rear Grommet, without Interfacial Seal	A	GPRBH30PA	1738167-1
				B	GPRBH30PB	1738172-1
			Non-environmental (no Grommet or Seal)	A	GPRBN30PA	1738168-1
				B	GPRBN30PB	1738173-1
		Socket	Environmental, with Rear Grommet	A	GPRBE30SA	1738169-1
				B	GPRBE30SB	1738174-1
			Non-environmental (no Grommet or Seal)	A	GPRBN30SA	1738170-1
				B	GPRBN30SB	1738175-1
	34	Pin	Environmental, with Rear Grommet & Interfacial Seal	A	GPRBE34PA	1738176-1
				B	GPRBE34PB	1738181-1
			Insert with Rear Grommet, without Interfacial Seal	A	GPRBH34PA	1738177-1
				B	GPRBH34PB	1738182-1
			Non-environmental (no Grommet or Seal)	A	GPRBN34PA	1738178-1
				B	GPRBN34PB	1738183-1
		Socket	Environmental, with Rear Grommet	A	GPRBE34SA	1738179-1
				B	GPRBE34SB	1738184-1
			Non-environmental (no Grommet or Seal)	A	GPRBN34SA	1738180-1
				B	GPRBN34SB	1738185-1
	40	Pin	Environmental, with Rear Grommet & Interfacial Seal	A	GPRBE40PA	1738186-1
				B	GPRBE40PB	1738191-1
			Insert with Rear Grommet, without Interfacial Seal	A	GPRBH40PA	1738186-2
				B	GPRBH40PB	1738191-2
			Non-environmental (no Grommet or Seal)	A	GPRBN40PA	1738186-3
				B	GPRBN40PB	1738191-3
		Socket	Environmental, with Rear Grommet	A	GPRBE40SA	1738189-1
				B	GPRBE40SB	1738194-1
			Non-environmental (no Grommet or Seal)	A	GPRBN40SA	1738189-2
				B	GPRBN40SB	1738194-2
	48	Pin	Environmental, with Rear Grommet & Interfacial Seal	A	GPRBE48PA	2102227-1
				B	GPRBE48PB	2102227-2
			Insert with Rear Grommet, without Interfacial Seal	A	GPRBH48PA	2102227-3
				B	GPRBH48PB	2102227-4
			Insert with Interfacial Seal Only	A	GPRBT48PA	2102228-1
				B	GPRBT48PB	2102228-2
			Non-environmental (no Grommet or Seal)	A	GPRBN48PA	2102229-1
				B	GPRBN48PB	2102229-2
		Socket	Environmental, with Rear Grommet	A	GPRBE48SA	2102229-3
				B	GPRBE48SB	2102229-4
			Non-environmental (no Grommet or Seal)	A	GPRBN48SA	2102230-1
				B	GPRBN48SB	2102230-2

Dimensions are shown for reference purposes only. Specifications subject to change.

Dimensions are in millimeters unless otherwise specified.

USA: +1 800 522 6752
Asia Pacific: +86 0 400 820 6015
UK: +44 800 267 666

For additional support numbers please visit www.te.com

Insert Descriptive Part Number Format (Continued)

GPRB Insert Part Numbers (Continued)

Series	Contact Arrangement	Contact Type	Classification	Keying	Descriptive Part Number	TE Part Number
B	25P1	Pin	Environmental, with Rear Grommet & Interfacial Seal	A	GPRBE25P1PA	2000108-1
				B	GPRBE25P1PB	2033997-1
		Socket	Environmental, with Rear Grommet	A	GPRBE25P1SA	2033989-1
				B	GPRBE25P1SB	2033998-1
	25Q1	Pin	Environmental, with Rear Grommet & Interfacial Seal	A	GPRBE25Q1PA	1811121-1
				B	GPRBE25Q1PB	1877567-1
		Socket	Environmental, with Rear Grommet	A	GPRBE25Q1SA	1811122-1
				B	GPRBE25Q1SB	1877568-1
	10Q2	Pin	Environmental, with Rear Grommet & Interfacial Seal	A	GPRBE10Q2PA	1877702-1
				B	GPRBE10Q2PB	1877706-1
			Non-environmental (no Grommet or Seal)	A	GPRBN10Q2PA	2000143-1
		Socket	Environmental, with Rear Grommet	A	GPRBE10Q2SA	1877704-1
				B	GPRBE10Q2SB	1877708-1
			Non-environmental (no Grommet or Seal)	A	GPRBN10Q2SA	1954067-1
	3Q3	Pin	Environmental, with Rear Grommet & Interfacial Seal	A	GPRBE3Q3PA	1877694-1
				B	GPRBE3Q3PB	1877698-1
		Socket	Environmental, with Rear Grommet	A	GPRBE3Q3SA	1877696-1
				B	GPRBE3Q3SB	1877700-1
	F12	ARINC 801 Termini	Environmental, without Sleeve Holder	A	GPRBEF12PA	1738805-1
				B	GPRBEF12PB	1738806-1
			Environmental, with Sleeve Holder	A	GPRBEF12SA	1738807-1
				B	GPRBE2F12SB	1738808-1
	F12C	ARINC 801 Termini	Environmental, without Sleeve Holder	A	GPRBEF12CPA	2000856-1
				B	GPRBEF12CPB	2000857-1
			Environmental, with Sleeve Holder	A	GBRBEF12CSA	2000858-1
				B	GPRBF12CSB	2000859-1
	12F6	ARINC 801 Termini	Environmental, without Sleeve Holder	A	GPRBE12F6PA	2000860-1
				B	GPRBE12F6PB	2000861-1
			Environmental, with Sleeve Holder	A	GPRBE12F6SA	2000862-1
				B	GPRBE12F6SB	2000863-1
	M2	Mini-Expanded Beam	Spring-loaded Half	A	GPRBEM2PA	1445162-1
				B	GPRBEM2PB	2000189-1
			Fixed Half	A	GPRBEM2SA	1445163-1
				B	GPRBEM2SB	2000190-1

Dimensions are shown for reference purposes only. Specifications subject to change.

Dimensions are in millimeters unless otherwise specified.

USA: +1 800 522 6752
Asia Pacific: +86 0 400 820 6015
UK: +44 800 267 666

For additional support numbers please visit www.te.com

Insert Arrangements

GPRA Inserts[1]

00
Dummy Insert

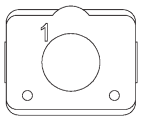

1C1
1 x Size 5 Contacts

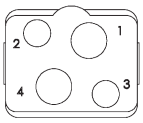

04
2 x Size 15 or 16 Contacts
2 x Size 12 Contacts

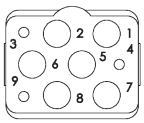

09
3 x Size 20 Contacts
6 x Size 15 or 16 Contacts

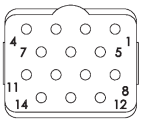

14
14 x Size 20 Contacts

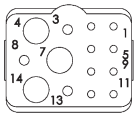

14M
8 x Size 22 Contacts
3 x Size 20 Contacts
3 x Size 15 or 16 Contacts

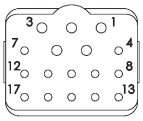

17
12 x Size 22 Contacts
5 x Size 20 Contacts

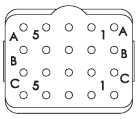

20
20 x Size 22 Contacts

Note
[1] Pin inserts: Mating faces shown above.
[2] In a GPRB2 shell, one insert must be “A” keyed and the other one must be “B” keyed (See at right).
[3] Size 8 cavity applicable for use with ARINC 600 Quadrax or Twinax contacts.

Insert Arrangements (Continued)

GPRB Inserts[1, 2]

00
Dummy Insert

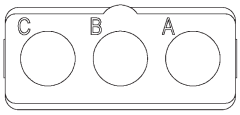

C3
3 x Size 5 Coax Contacts

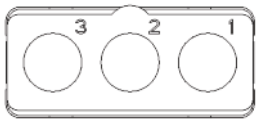

P3
3 x Size 5 Power Contacts

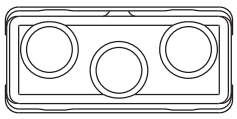

3Q3[3]
3 x Size 8 Quadrax Contacts

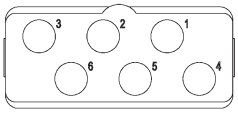

06
6 x Size 12 Contacts

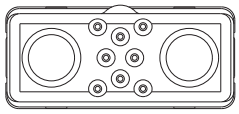

10Q2[3]
8 x Size 20 Contacts
2 x Size 8 Quadrax Contacts

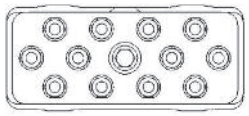

12F6
6 x size 16 Optical ARINC 801 termini
6 size 16 special electrical contacts

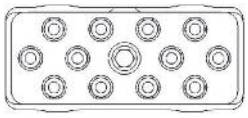

F12C
(high grade thermoplastic)
12 x size 16
Optical ARINC 801 termini

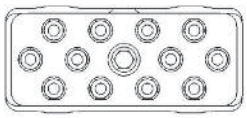

F12 (aluminum)
12 x size 16
Optical ARINC 801 termini

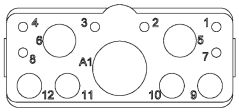

13C1
2 x Size 12 Contacts
4 x Size 15 or 16 Contacts
6 x Size 20 Contacts
1 x Size 5 Coax Contacts

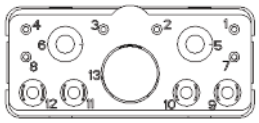

13P1
2 x Size 12 Contacts
4 x Size 15 or 16 Contacts
6 x Size 20 Contacts
1 x Size 5 Power Contacts

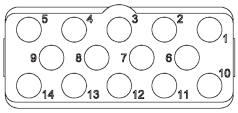

14
14 x Size 15 or 16 Contacts

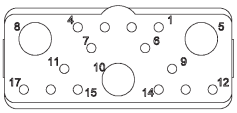

17
14 x Size 20 Contacts
3 x Size 12 Contacts

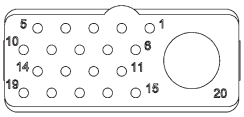

20C1
19 x Size 20 Contacts
1 x Size 5 Coax Contacts

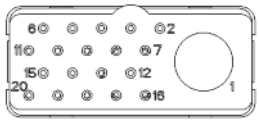

20P1
19 x Size 20 Contacts
1 x Size 5 Power Contacts

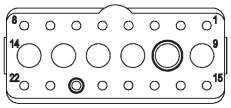

22
16 x Size 20 Contacts
6 x Size 15 or 16 Contacts

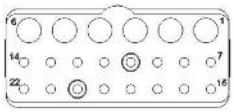

22V
16 x size 20 contacts
6 x size 16 contacts

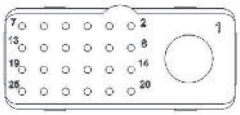

25PI
24 x size 22 contacts
1 s size 8 power contacts

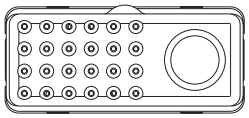

25QI[3]
24 x Size 22 Contacts
1 x Size 8 Quadrax Contacts

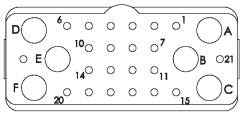

28
22 x Size 22 Contacts
6 x Size 15 or 16 Contacts

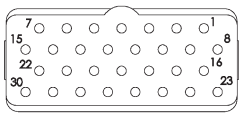

30
30 x Size 20 Contacts

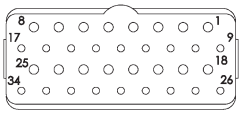

34
18 x Size 22 Contacts
16 x Size 20 Contacts

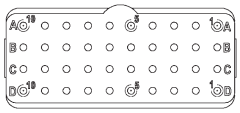

40
40 x Size 22 Contacts

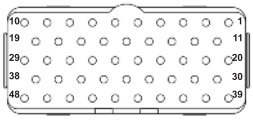

48
48 x Size 22 Contacts

Bussed inserts available for arrangements 13, 30, and 40.
Contact TE Connectivity.
Mini Expanded Beam inserts - see page 8-25

Keying:

A **B**

Note
[1] Pin inserts: Mating faces shown above.
[2] In a GPRB2 shell, one insert must be “A” keyed and the other one must be “B” keyed (See at right).
[3] Size 8 cavity applicable for use with ARINC 600 Quadrax or Twinax contacts.

Catalog 1308940
Revised 9-14

www.te.com

Dimensions are shown for reference purposes only. Specifications subject to change.

Dimensions are in millimeters unless otherwise specified.

USA: +1 800 522 6752
Asia Pacific: +86 0 400 820 6015
UK: +44 800 267 666

For additional support numbers please visit www.te.com

Insert Assemblies for High Speed Applications

F12, F12C & 12F6 ARINC 801 Insert Assemblies

Product Facts

- F12C inserts now available in composite material
- ARINC 801 approved
- Optical termini for use with GPR, ARINC 600, circular MIL-DTL-38999 connectors.
- Industry Standard 1.25 mm ceramic ferrule
- Compatible with 1.5-2.2 mm tight jacket and loose tube cable construction:
- MT - Tight jacket cable
- ML – Loose tube cable
- Single mode (SM) and Multimode (MM) versions
- ARINC 801 termini part numbers:1828199-1 MM/ML Version1828200-1 MM/MT Version1918614-1 SM/ML Version1918616-1 SM/ML Version-APC1918615-1 SM/MT Version1918617-1 SM/MT Version - APC

Materials:

Housings – Nickel Plated Copper
Ferrule – Zirconia
Spring – Stainless Steel
Crimp Sleeve – Nickel Plated Copper
Protective Cover – Silicone

Optical Performance

Single mode, 1310 nm/1550 nm (UPC)
Attenuation, Mean – 0.15 dB
Return Loss - >50 dB
Multimode, 850 nm.1310 nm
Attenuation, Mean – 0.10 dB
Return Loss - >20 dB

Assembly Capabilities

TE has extensive Rugged Optic Harness capabilities. Please consult your local TE Sales Representative for assistance.

Insert Assembly, without Sleeve Holder, Environmental
Aluminum Housings, F12
Key A 1738805-1
Key B 1738806-1

Composite Housings, F12C
Key A 2000856-1
Key B 2000857-1

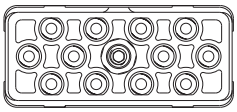

Insert Assembly, with Sleeve Holder, Environmental, Aluminum Housings, F12
GPRB
Key A 1738807-1
Key B 1738808-1

Composite Housings, F12C
Key A 2000858-1
Key B 2000859-1

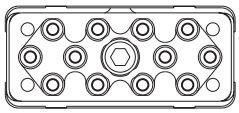

Insert Assembly, without Sleeve Holder, Environmental, 12F6
GPRB
Key A 2000860-1
Key B 2000861-1

Insert Assembly, with Sleeve Holder, Environmental, 12F6
Key A 2000862-1
Key B 2000863-1

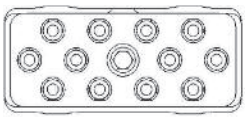

ARINC 801 Cavity Reducers

Size 8 Quadrax	Part Number	ARINC 801 Cavity Reducer
Pin Quadrax adapter for ARINC 801 termini in Quadrax FR type cavity	1757727-1	Quadrax cavity reducer (FR/FR) for receptacle shell
Pin Quadrax adapter for ARINC 801 termini in Quadrax RR type cavity	1757710-1	Quadrax cavity reducer (RR/RR) for receptacle shell
Socket Quadrax adapter for ARINC 801 termini in Quadrax RR type cavity	1757711-1	Quadrax cavity reducer (RR/RR) for plug shell

ARINC 801 Optical Termini Part Numbers

Cable Dia.	Cable Structure ML (loose & tight) MT (ultra tight)	S/M Fiber 125,3 µm PC/UPC	S/M Fiber 125,3 µm APC	M/M Fiber 128 µm PC
0.9 mm Buffer	—	*	*	*
1.5 - 2.2 mm	ML	1918614-1	1918616-1	1828199-1
1.5 - 2.2 mm	MT	1918615-1	1918617-1	1828200-1

Consult your local TE Sales Representative for additional options.
* Contact TE for availability.

Catalog 1308940
Revised 9-14

www.te.com

Dimensions are shown for reference purposes only. Specifications subject to change.

Dimensions are in millimeters unless otherwise specified.

USA: +1 800 522 6752
Asia Pacific: +86 0 400 820 6015
UK: +44 800 267 666

For additional support numbers please visit www.te.com

Insert Assemblies for High Speed Applications (Continued)

M2 Mini-Expanded Beam Insert Holders

Product Facts

- **No wear on fiber optic interface; Very vibration resistant**
- **Easy to handle, easy to clean. Durable connection that is highly resistant to dirt/debris.**
- **Singlemode or multimode**
- **Common 850/1300 dual wavelength, 1310 nm, or 1550 nm wavelengths**
- **Easy alignment for low-loss repeatable performance**
- **Consistent overall optical "link budget" assured**
- **Low sensitivity to thermal fluctuations and interface contamination**
- **Repeatable low-loss performance in harsh environments.**

Expanded Beam Products

- **Ball lens expands cross-sectional area of light over 200 times for multimode and over 2000 times for singlemode**
- **Rugged hermaphroditic construction (i.e., same insert mates to each other)**
- **Physically non-contacting mating conditions; no wear, installed fiber ferrule protected by ball lens**
- **PRO BEAM Mini Connector field deployable interconnects**
- **Insert/holder blocks designed for Mini-Expanded Beam**
- **Common insert for 1- through 4-channels**
- **Unique Modular Design, for use with multimode and singlemode fiber.**
- **Cable assembly and termination services**

Expanded Beam Insert

- **Mini-Expanded Beam insert for multi-channel small form factor – the smallest expanded beam multi-channel insert in the industry a TE Connectivity exclusive.**

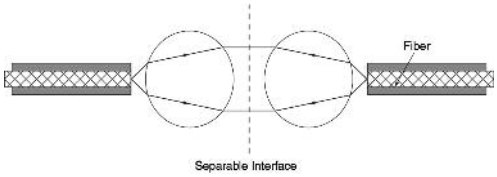

Expanded Beam Principle

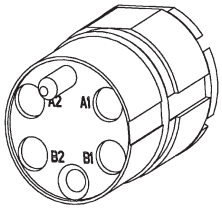

Expanded Beam Inserts

Fiber Optic interconnect/cable system using Expanded Beam technology, which physically expands and collimates the transmission signal into an optical beam over 14 times its original diameter (the cross sectional area of the light beam increases over 200 times for multimode optical signals). For singlemode signals, the collimated beam is over 45 times its original diameter (the cross-sectional area of the light beam increases over 2,000 times). It is then refocused back down onto the core of the receiving fiber. This approach provides ease of alignment and low sensitivity to thermal changes and contamination. High strength, precision connector housings enhance a durable connection, optimizing low loss and repeatable performance.

Suitable for aerospace, avionics, field-deployable communications, marine ship-to-shore applications, security systems, mobile diagnostic units, oil and gas exploration and other harsh environment applications demanding strength, durability and reliable performance in conditions of multiple couplings/decouplings, blindmate situations, and high vibration.

Assembly Capabilities

TE has extensive Rugged Optic Harness capabilities. Please consult your local TE Sales Representative for assistance.

Catalog 1308940
Revised 9-14

www.te.com

Dimensions are shown for reference purposes only. Specifications subject to change.

Dimensions are in millimeters unless otherwise specified.

USA: +1 800 522 6752
Asia Pacific: +86 0 400 820 6015
UK: +44 800 267 666

For additional support numbers please visit www.te.com

Insert Assemblies for High Speed Applications (Continued)

M2 Mini-Expanded Beam Insert Holders
(Continued)

Holder Kit, Pin (Spring-Loaded), Mini-Expanded Beam
Key A – GPRB– 1445162-1
Key B – GPRB– 2000189-1

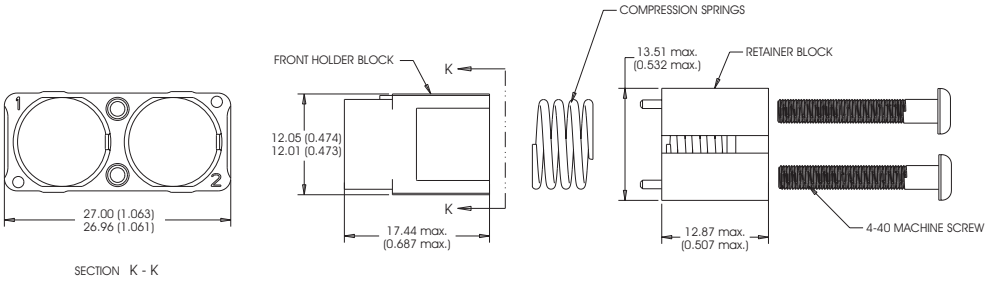

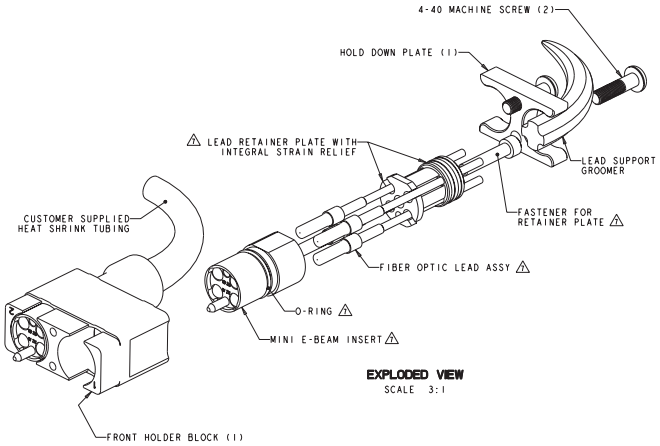

Holder Kit, Socket (Fixed), Mini-Expanded Beam,
Key A – GPRB –1445163-1
Key B – GPRB –2000190-1

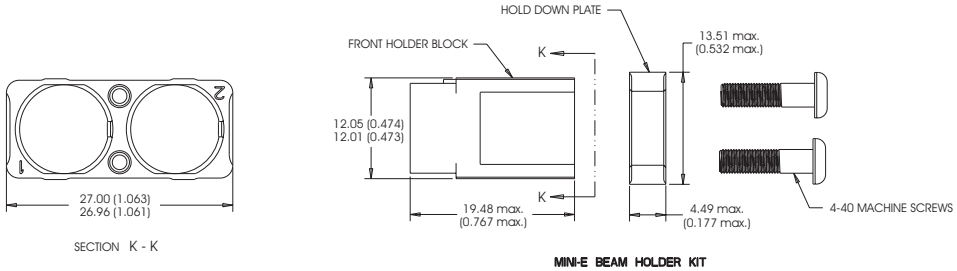

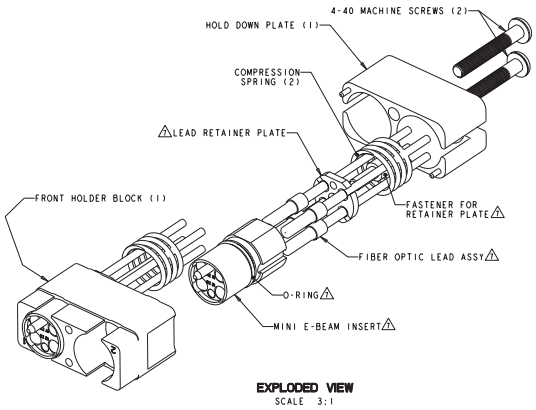

Catalog 1308940
Revised 9-14

www.te.com

Dimensions are shown for reference purposes only. Specifications subject to change.

Dimensions are in millimeters unless otherwise specified.

USA: +1 800 522 6752
Asia Pacific: +86 0 400 820 6015
UK: +44 800 267 666

For additional support numbers please visit www.te.com

Insert Assemblies for High Speed Applications (Continued)

24 Position Fiber Optic Connector

for use with ARINC 801 termini

Application Specification:
114-13192

Product Specification:
108-2247

Qualification Test Report:
501-680

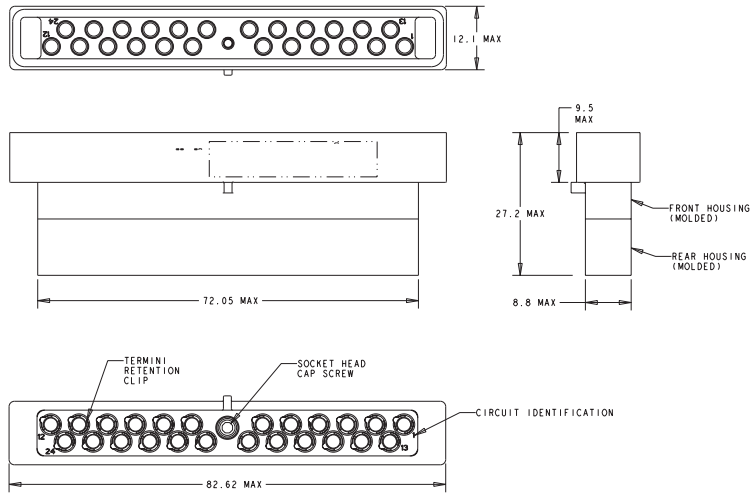

Backplane Connector Kit
1738969-1

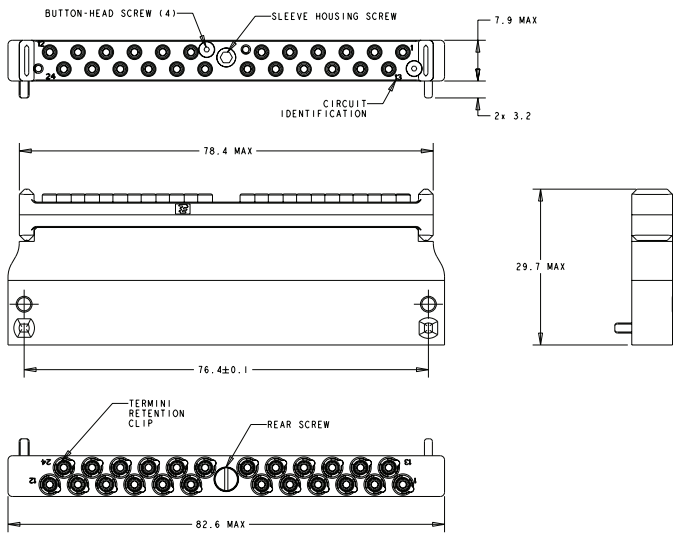

Module Connector
1738960-2

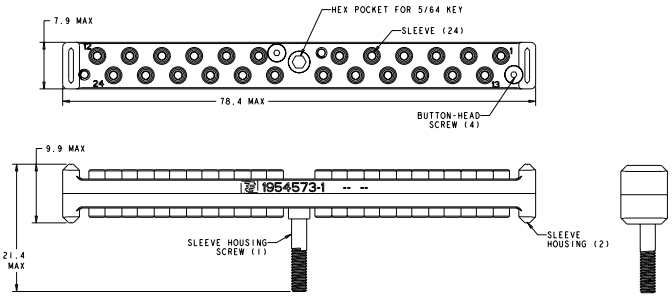

Sleeve Holder Assembly

1954573-1

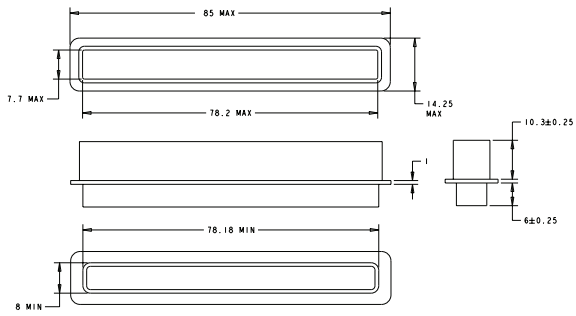

Dust Cover
1877519-1

Dimensions are shown for reference purposes only. Specifications subject to change.

Dimensions are in millimeters unless otherwise specified.

USA: +1 800 522 6752
Asia Pacific: +86 0 400 820 6015
UK: +44 800 267 666

For additional support numbers please visit www.te.com

Contact and Application Tool Part Numbers

Form	Contact Size	Wire Size	Type	Contacts TE PN	Contact Crimp Tools & Positioners: Crimp Tool TE P/N	Crimp Tool MIL P/N	Positioner TE P/N	Positioner MIL P/N	Contact Insertion/Removal Tools: TE Part Number	MIL Part Number
Crimp Contacts	22	22 - 24 - 26	Pin	1738007-1	601966-1	M22520/2-01	601966-8	M22520/2-23	91066-1	M81969/1-01
			Socket	1738008-1						
			Socket*	1954077-2						
	22 - Reduced Crimp Barrel	28 - 30	Pin	1738009-1						
			Socket	1738010-1						
	20	20 - 22 - 24	Pin	1738011-1			601966-5	M22520/2-08	91067-2	M81969/1-02
			Socket	1738012-1						
	16	16 - 18 - 20	Pin	1738013-1	601967-1	M22520/1-01	601967-2	M22520/1-02	91066-3	M81969/1-03
			Socket	1738014-1						
	16 - Reduced Crimp Barrel	20 - 22 - 24	Pin	1738015-1						
			Socket	1738016-1						
	12	12 - 14	Pin	1738017-1					1738327-1	M81969/28-02
			Socket	1738018-1						
	8	8 - 10	Pin	1996474-1					58284-1	M81969/28-03
			Socket	1996475-1						
	5	8 - 10	Pin	1738019-1	N/A	M22520/23-01 & M22520/23-02	Locator 1738331-1	N/A	91074-1	M81969/28-01
			Socket	1954722-1						
	16 -Mating End 20-Crimp Barrel	20 - 22 - 24	Ground Block Contact	2-592404-1 M39029/1-101	601966-1	M22520/2-01	N/A	M22520/2-02 or /2-11	592105-1	M81969/14-11 or /14-02

Form	Contact Size	Wire Size	Type	Contacts TE PN	Center Conductor / Contact Crimp Tools & Positioners: Crimp Tool TE P/N	Crimp Tool MIL P/N	Positioner TE P/N MIL P/N	Outer Conductor Crimp Tools & Die Sets: Crimp Tool TE P/N MIL P/N	Die Set TE P/N MIL P/N	Contact Insertion/Removal Tools: TE P/N	MIL P/N
Coaxial Crimp Contacts	5	RG142 RG223 KX23	Pin	1738021-1	601966-1	M22520/2-01	1738332-1 N/A	608650-1 M22520/5-01	1738336-1 M22520/5-05	91074-1	M81969/28-01
			Socket	1738022-1							
	5	RG174 RG316 KX22	Pin	1738023-1							
			Socket	1738024-1							
	15	RG174 RG179 RG316 - KX22	Pin	1738025-1			1738333-1 N/A	601963-1 M22520/4-01	1738337-1 N/A	91066-3	M81969/1-03
			Socket	1738026-1							
	15	RG178 KX21 ST	Pin	1738027-1							
			Socket	1738028-1							
	15	KX21 DT	Pin	1738029-1							
			Socket	1738030-1							
	15	UT .047	Pin	1738031-1							
			Socket	1738032-1							
Concentric Twinax Crimp Contacts	5	PAN61421 M17/176-0002	Pin	1738033-1	608650-1	M22520/5-01	1738338-1 N/A	608650-1 M22520/5-01	1738336-1 M22520/5-05	91074-1	M81969-28-01
			Socket	1738034-1							

*** Economy socket**

Dimensions are shown for reference purposes only. Specifications subject to change.

Dimensions are in millimeters unless otherwise specified.

USA: +1 800 522 6752
Asia Pacific: +86 0 400 820 6015
UK: +44 800 267 666

For additional support numbers please visit www.te.com

Contact and Application Tool Part Numbers (Continued)

Form	Contact Size	Hex Crimp Number	Reference Cables	Type	Contacts PN	Contact Insertion/Extraction
ARINC 600 QUADRAX Contacts	8	0.218	Tensolite NF24Q100, NF26Q100, 24443/03130X-4 (LD), 2443/P025X-4 (LD), Raychem CEC-RWC-18687, CEC-RWC-18664	Pin	1445692-1	58284-1
				Socket	1445693-1	
			DRAKA F4703-3, F4704-4	Pin	1445692-6	
				Socket	1445693-6	
		0.231	Tensolite 26473/02006X-4 (LD), Raychem CEC-RWC-18684, CEC-RWC-18680	Pin	1877039-1	
				Socket	1877040-1	
		—	—	Seal Assembly	1877626-2	M81969/28-03
Differential Pair TWINAX Contacts	8	—	Raychem 100 ohm Twinaxial 0024T1426	Pin	1811865-1	
				Socket	1811866-1	
				Seal Assembly	1954046-1	
Differential Pair TWINAX Contacts	8	—	Raychem 120 ohm Twinaxial 1726A1424	Pin	1811865-3	
				Socket	1811866-3	
				Seal Assembly	1954046-1	

ARINC 801 Optical Termini Part Numbers

Cable Dia.	Cable Structure ML (loose & tight) MT (ultra tight)	S/M Fiber 125,3 µm PC/UPC	S/M Fiber 125,3 µm APC	M/M Fiber 128 µm PC
0.9mm Buffer	—	*	*	*
1.5 - 2.2mm	ML	1918614-1	1918616-1	1828199-1
1.5 - 2.2mm	MT	1918615-1	1918617-1	1828200-1

Consult your local TE Sales Representative for additional options.
* Contact TE for availability.

PC Tail Contacts

Inserts pre-assembled with PC tail contacts with straight or right-angle termination are available — Consult TE.

Posted Contacts – Rear Release/Remove

Form	Contact Size	Type	Tail Diameter	Tail Length	Part Number
Posted Contacts	22	Pin	0.63	12.6	1738709-1
	20	Pin	0.63	13.35	1738710-1
	16	Pin	1.32	14.45	1996452-2
	12	Pin	2.03	13.60	1738711-1
	8	Pin	4.04	26.63	2000499-1
	5	Pin	4.55	26.66	2000500-1

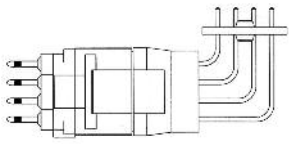

Right Angle Posted Pin Contact / Insert Assemblies

Form	Insert Arrangement		Part Number
Insert assemblies with right-angle pin contacts installed; insert assy. also includes pin spacer	06	GPRBE06PA	1996453-1
		GPRBE06PB	1996453-2
	40	GPRBE40PA	1996454-1
		GPRBE40PB	1996454-2
	25Q1*	GPRBE25Q1PA	1996481-1
		GPRBE25Q1PB	1996481-2

*with Twinax contact installed in Size 8 cavity
Other insert arrangements available upon request.

Spare Parts and Tools

Spare Parts

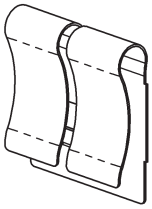

Grounding Spring
Part Number 1738199-1

GPRA and GPRB Series

Part Number	Description	To Be Used With
1738199-1	Grounding Spring	GPRA
1738200-1	Dust Cap – Plug Shell	GPRA
1738201-1	Dust Cap – Receptacle Shell	GPRA
1738203-1	Jacknut – A/B/C/D/E/F	GPRB2
1738204-1	Jacknut – N/R/W/X/Y/Z	GPRB2
1738205-1	Jackscrew – A/B/C/D/E/F	GPRB2
1738206-1	Jackscrew – N/R/W/X/Y/Z	GPRB2
1738207-1	Polarizing Guide Socket – A/B/C/D/E/F	GPRB2 Rack & Panel application
1738208-1	Polarizing Guide Socket– N/R/W/X/Y/Z	GPRB2 Rack & Panel application
1738209-1	Polarizing Guide Post – A/B/C/D/E/F	GPRB2 Rack & Panel application
1738210-1	Polarizing Guide Post – N/R/W/X/Y/Z	GPRB2 Rack & Panel application
1738213-1	Dust Cap – Plug Shell	GPRB1
1738214-1	Dust Cap – Receptacle Shell	GPRB1
1738211-1	Dust Cap – Plug Shell	GPRB2
1738212-1	Dust Cap – Receptacle Shell	GPRB2
1877328-1	Anti-Static Dust Cap – Plug Shell	GPRB2
1877329-1	Anti-Static Dust Cap – Receptacle Shell	GPRB2
1738400-1	Grounding Spring	GPRB1 & B2
1738428-1	Polarization Key, Male	GPRA & legacy GPRB1
1738429-1	Polarization Key, Female	GPRA & legacy GPRB1
1738440-1	Key Retention Plate Assembly	GPRA & legacy GPRB1
1877985-1	Polarization Key, Pin	GPRB1 (for flexible sidewall design)
1877986-1	Polarization Key, Socket	GPRB1 (for flexible sidewall design)

Tools

GPRA and GPRB Series

Part Number	Description	To Be Used With
1738215-1	Insert extraction tool	GPRA
1738216-1	Allen wrench locking system	GPRA, GPRB1
1738217-1	Insert handling case	GPRA, GPRB1 & B2
1738218-1	Insert extraction tool	GPRB1 & B2
1738219-1	Right-angle insert extraction tool	GPRB1 & B2
1738220-1	Spanner wrench for locking device w/1/4 inch adapter	GPRB2
1738221-1	Spanner wrench for locking device w/handle	GPRB2

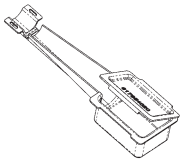

Insert Handling Case
Part Number 1738217-1

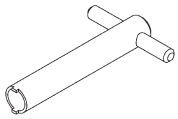

Spanner Wrench for Locking Device with Handle
Part Number 1738221-1

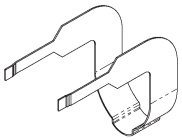

Right-Angle Insert Extraction Tool
Part Number 1738219-1

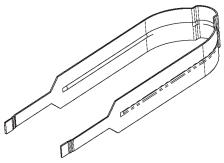

Insert Extraction Tool
Part Number 1738218-1

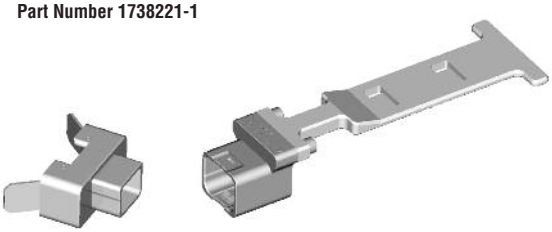

Stainless steel testing tools are available to check the wiring of the inserts without the shell — Consult TE.

Dimensions are shown for reference purposes only. Specifications subject to change.

Dimensions are in millimeters unless otherwise specified.

USA: +1 800 522 6752
Asia Pacific: +86 0 400 820 6015
UK: +44 800 267 666

For additional support numbers please visit www.te.com

EMI Backshells and Strain Reliefs

GPRB Series

Part Number	Description	Used With
1738310-1	Straight strain relief	GPRB1
1738311-1	45° strain relief	GPRB1
1738312-1	Straight backshell	GPRB1
1738313-1	Straight strain relief	GPRB2
1738314-1	Backshell for shielded termination	GPRB2
1738315-1	Backshell for screened twisted-pair cables	GPRB2
1738316-1	Backshell for large sized wire harnesses	GPRB2
1811650-1	Straight Strain Relief	GPRB2-Vertical

GPRA Series

Part Number	Description
1738317-1	Straight strain relief
1738318-1	45° strain relief
1738319-1	Straight backshell

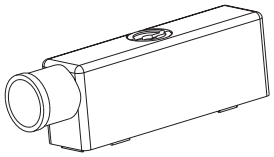

Backshell Kit, 90° Exit
Contact TE

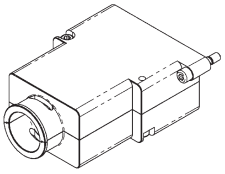

Straight Backshell
Part Number 1738312-1

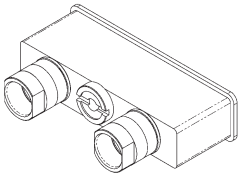

Backshell for
Shielded Termination
Part Number 1738314-1

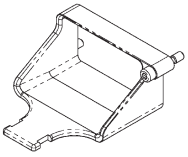

Straight Strain Relief
Part Number 1738310-1

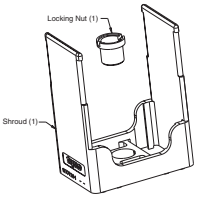

Vertical Strain Relief Kit, Fiber Optic
Part Number 1877736-1

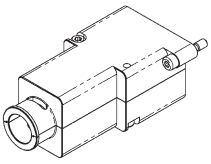

Straight Backshell
Part Number 1738319-1

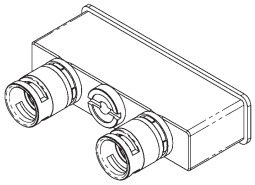

Backshell for Screened
Twisted Pair Cables
Part Number 1738315-1

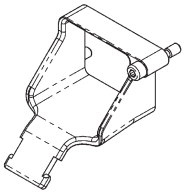

45° Strain Relief
Part Number 1738318-1

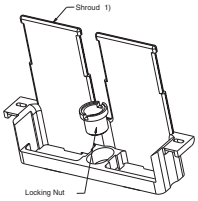

Horizontal Strain Relief Kit, Fiber Optic
Part Number 1877888-1

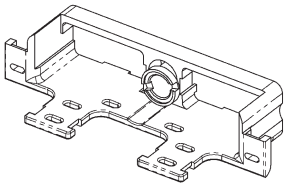

Straight Strain Relief
Part Number 1738313-1

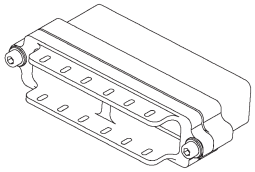

Backshell for Large Sized
Wire Harnesses
Part Number 1738316-1

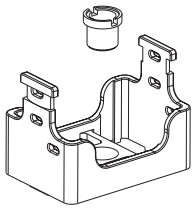

GPRB2 Vertical Strain Relief
Part Number 1811650-1

Dimensions are shown for reference purposes only. Specifications subject to change.

Dimensions are in millimeters unless otherwise specified.

USA: +1 800 522 6752
Asia Pacific: +86 0 400 820 6015
UK: +44 800 267 666

For additional support numbers please visit www.te.com

Galley Insert (GAIN) Connectors

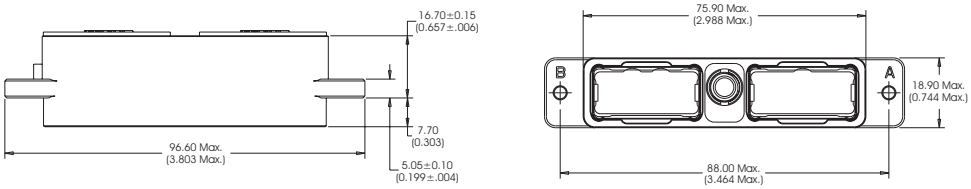

Receptacle Shell, Front Panel Mount, with Guide Socket
GPRB2
1811119-1

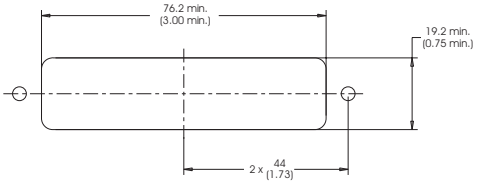

Recommended Panel Cutout

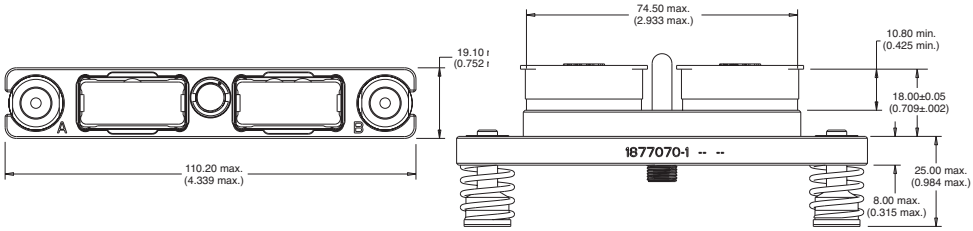

Plug Shell, Spring-Loaded, Float-Mounting
GPRB2
1877070-1

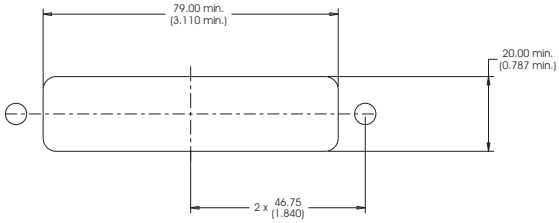

Recommended Panel Cutout

Product Facts

- **Designed for ARINC 810 – standard interfaces for Galley Insert (GAIN) Equipment**
- **Spring-Loaded, float-mounting plug shell design allows ±1 mm variation in the mating direction**
- **Blind mating guide pin & socket accept ±2 mm/ 2° lateral misalignment**
- **Product incorporates:**
  - **Size 22 signal contacts**
  - **Size 12 power contacts**
  - **Size 8 twinax contacts**
- **500 mating cycles durability**

Application Specification:

114-13220

Description	Part Number	Ref. Catalog Page
Fully Assembled Receptacle	1877652-1	8-32
Fully Assembled Plug	1877646-1	8-32
Receptacle Shell Assembly	1811119-1	8-32
Plug Shell Assembly	1877070-1	8-32
25Q1 Pin Insert Assembly	1811121-1	8-20, 8-32
25Q1 Socket Insert Assembly	1811122-1	8-20, 8-32
06 Pin Insert Assembly	1738101-1	8-18, 8-32
06 Socket Insert Assembly	1738104-1	8-18, 8-32
Size 22 Pin Contact	1738007-1	8-28, 8-32
Size 22 Socket Contact	1738008-1	8-28, 8-32
Size 12 Pin Contact	1738017-1	8-28, 8-32
Size 12 Socket Contact	1738018-1	8-28, 8-32
Size 8 Twinax Pin Contact	1811865-3	8-28, 8-31
Size 8 Twinax Socket Contact	1811866-3	8-29, 8-32
Size 22 Sealing Plug	592104-4	8-32
Strain Relief (Straight)	1738313-1	8-31, 8-32
Dust Cap, Plug	1738211-1	8-30, 8-32
Dust Cap, Receptacle	1738212-1	8-30, 8-32
Seal Assembly, Size 8, GPR	1954046-1	8-29, 8-32
120 Ohm Twinaxial Cable	1726A1424	8-29

Dimensions are shown for reference purposes only. Specifications subject to change.

Dimensions are in millimeters unless otherwise specified.

USA: +1 800 522 6752
Asia Pacific: +86 0 400 820 6015
UK: +44 800 267 666

For additional support numbers please visit www.te.com

Custom Shells

Custom Shells

This custom 4-cavity receptacle shell was developed and serves as the rear panel of the customer's enclosure.

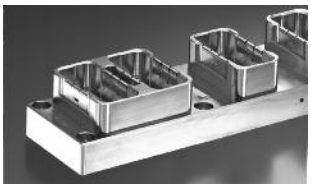

GPRB4 (Horizontal) Shell Dimensions

Shell Kits with Four Cavities

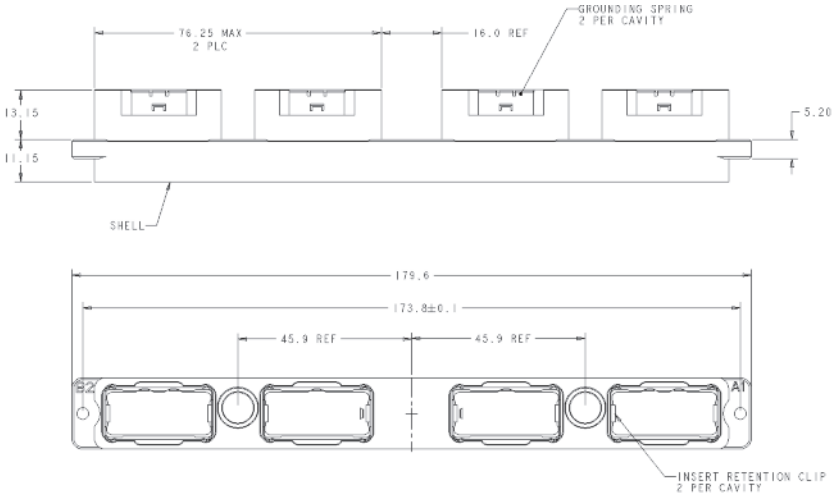

Receptacle, w/(2) thru holes
1996487-1

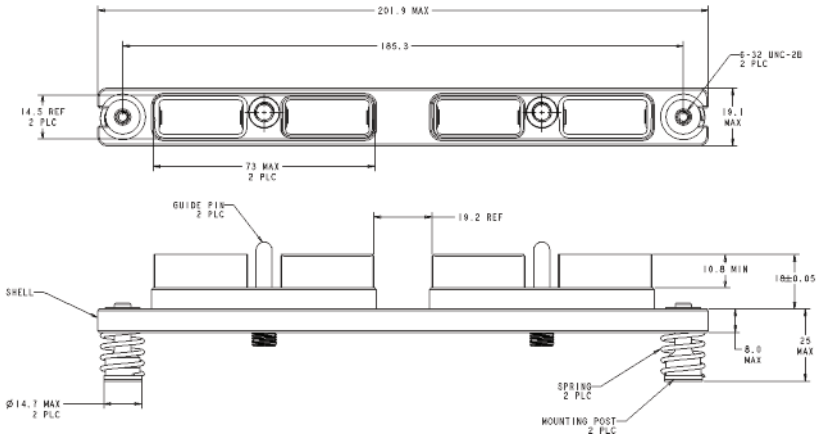

Plug, w/ spring loaded float mount
1996488-1

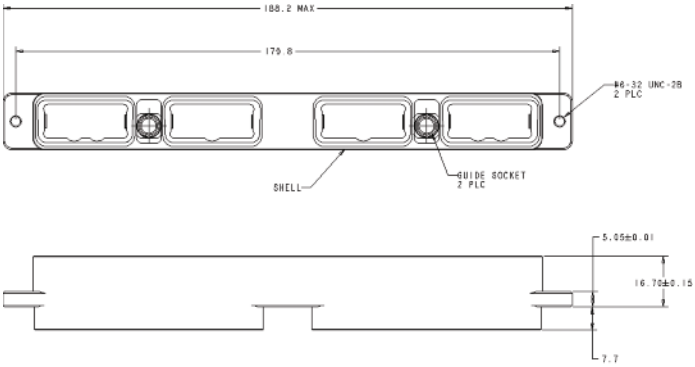

Receptacle, front panel mount, w/ (2) 6-32 holes

Dimensions are shown for reference purposes only. Specifications subject to change.

Dimensions are in millimeters unless otherwise specified.

USA: +1 800 522 6752
Asia Pacific: +86 0 400 820 6015
UK: +44 800 267 666

For additional support numbers please visit www.te.com

Custom Solutions and In Development Products

The GPRA & B Connector Series offers a comprehensive range of standard components that allows the user to build a connector to meet his requirements. However, standard shells might not be compatible with the user's application; alternate solutions are available to meet the customer's specific requirements with limited investment by using standard inserts and contacts. Some of these are shown below.

Multicavity Racked Shells

GPRB shells can be built in any format from 4 to 20 cavities for either panel or rack applications and with or without grounding blocks. These shells accommodate standard inserts.

Solution for IMA (Integrated Modular Avionics)

A right-angle contact printed circuit board connector which allows direct mating with an airframe connector has been developed. It is fitted with special rack features: spring loaded shell, EMI shield frame and 4 polarization posts with 256 combinations.

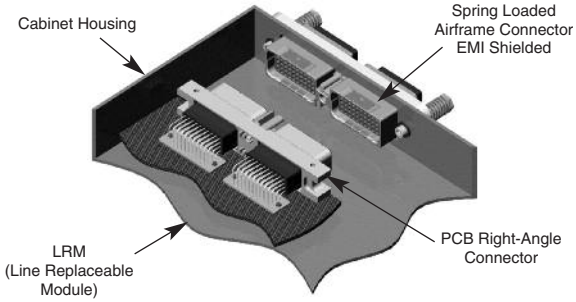

Composite Shells (in development)

Low weight, Skydrol® resistant composite shells have been developed.

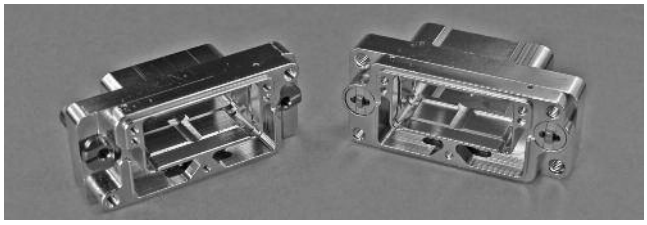

High Density Insert - 48 Position

To save space and weight and to accommodate density demand in electronic equipment.

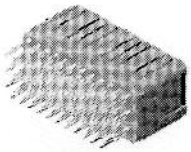

Custom Inserts

Inserts are available with PC Tail contacts pre-assembled, such as this 40-position pin assembly.

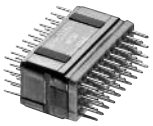

SKYDROL is a registered trademark of Solutia Inc.

Catalog 1308940
Revised 9-14

www.te.com

Dimensions are shown for reference purposes only. Specifications subject to change.

Dimensions are in millimeters unless otherwise specified.

USA: +1 800 522 6752
Asia Pacific: +86 0 400 820 6015
UK: +44 800 267 666

For additional support numbers please visit www.te.com

AMPLIMITE Subminiature Connectors

Introduction

Product Facts

- **Military qualified connectors conform to the latest amendments of MIL-DTL-24308**
- **Industrial versions available that use the same manufacturing process of MIL-C-24308 connectors**
- **Non-magnetic versions available per NASA spec, or with rubber grommet on rear of NASA-type connector**
- **ULTRA-LITE AMPLIMITE non-magnetic connectors save weight and improve EMI shielding vs. brass shell NASA-style connectors**
- **AS39029 contacts offer reliability and economies of high speed termination by automatic machine**
- **Connector savers (feed-through) preserve permanently mounted connectors in high use applications**
- **Choice of sizes — Size 1 through 5 for Series 109, standard density with 9, 15, 25, 37 and 50 contacts; Size 1 through 6 for Series 90, high density with 15, 26, 44, 62, 78 and 104 contacts**
- **Series 109 standard density connectors are available with cavities for power or coaxial contacts mixed with size 20 signal contacts**
- **Right-angle and straight PC board connectors in Series 109, standard density**
- **Preloaded, straight-posted connectors available in Series 90, high density**
- **Preloaded, solder cup connectors available in Series 109, standard density**
- **Produced under a Quality Management System certified to ISO 9001**

A copy of the certificate is available upon request

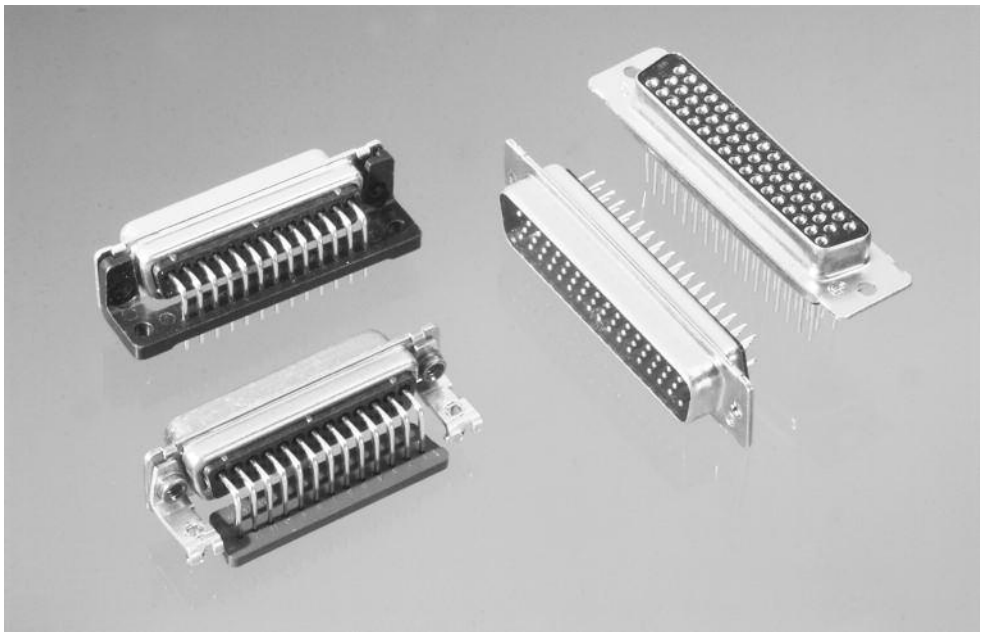

AMPLIMITE Military Subminiature D Connectors are compact pin and socket connectors especially designed for high density packages. They are ideally suited for applications such as military equipment, ground support devices, computer peripheral equipment, modems and industrial instrumentation.

In addition to the complete selection of standard military subminiature D-type connectors, TE Connectivity offers special application versions such as connectors which mix power/coax cavities with size 20 signal contacts; feed-through connectors which provide a disposable interface for high use applications; and special non-magnetic connectors with a rubber grommet on the rear, for strain relief.

Series 109 and Series 90 military connectors conform to the latest amendments of the MIL-DTL-24308 specification and thus are intermateable with similar connectors in the same sizes from other manufacturers. A broad range of connectors is included in this catalog, complemented by a variety of commercial cable clamps and mating hardware, which can be found in catalog 1307612.

Each AMPLIMITE crimp connector has metal clips which retain the pins and sockets after they are loaded into the inserts from the rear.

Series 109 connectors accept size 20 contacts, while Series 90 connectors accept size 22 contacts. Cavity spacing conforms to military specifications.

Size 20 and size 22 pins and sockets are designed for an 8-indent crimp. They are supplied loose-piece for crimping in a standard M22520/2 hand operated tool or tape-mounted for high speed application by an AMP-TAPEMATIC Stripper/Crimper Machine.

Series 90 and Series 109 connectors preloaded with contacts are available for printed circuit board mounting.

Special Series 109 connectors with power/coax cavities accept power contacts for 18 through 8 AWG [0.8-8 mm^2] wire or coaxial contacts for RG/U 174, 188A and 316 cable, in combination with standard size 20 signal contacts.

A complete range of non-military AMPLIMITE subminiature D connectors, contacts and accessories are shown in catalog 1307612, available on request from TE.

Dimensions are shown for reference purposes only. Specifications subject to change.

Dimensions are in millimeters unless otherwise specified.

USA: +1 800 522 6752
Asia Pacific: +86 0 400 820 6015
UK: +44 800 267 666

For additional support numbers please visit www.te.com

AMPLIMITE Subminiature Connectors (Continued)

Introduction (Continued)

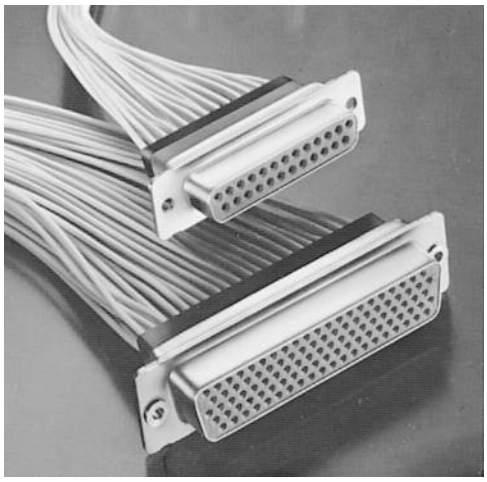

Connectors for crimp, snap-in contacts are available in both series, standard shells and non-magnetic, plus non-magnetic with rear rubber grommet.

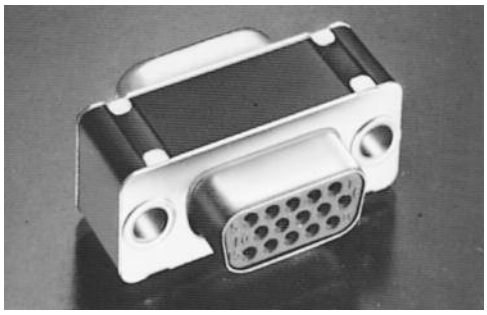

Connector savers extend life in high-use applications.

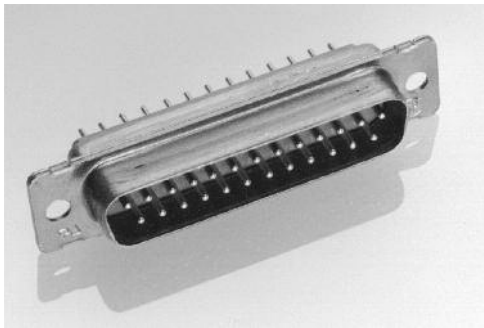

Straight posted versions available in both (Series 109) standard density and (Series 90) high density connectors.

Coax or power contacts can be mixed with signal contacts.

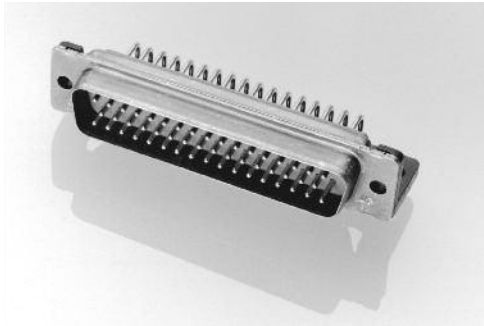

Right-angle board mount connectors for Series 109, standard density connections.

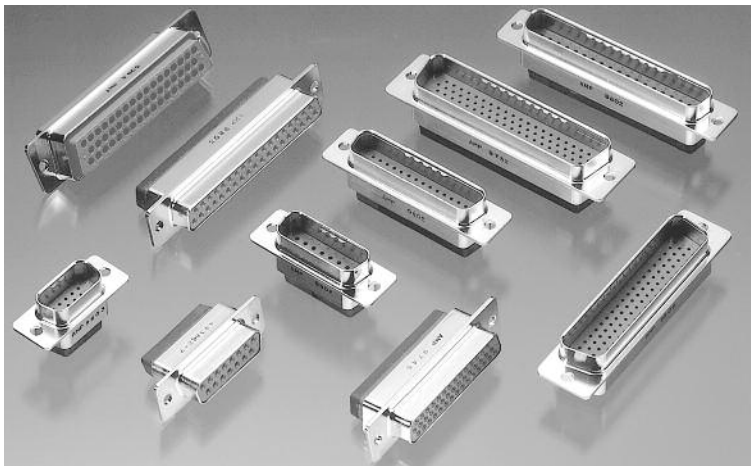

ULTRA-LITE AMPLIMITE Connectors for state-of-the-art weight savings and EMI performance.

The Series 109 and 90 Blindmate Plug connectors are designed to prevent butting of contacts during mating.

AMPLIMITE Connectors, Series 109

Series 109 Connectors (Standard Density)

Insert Arrangements

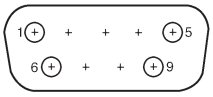

9 Position
(Shell Size 1)
MS 18273-1

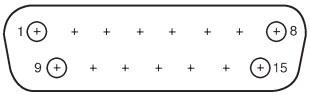

15 Position
(Shell Size 2)
MS 18274-1

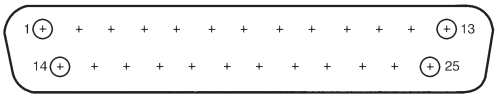

25 Position
(Shell Size 3)
MS 18275-1

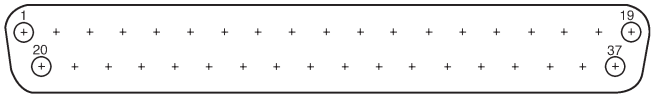

37 Position
(Shell Size 4)
MS 18276-1

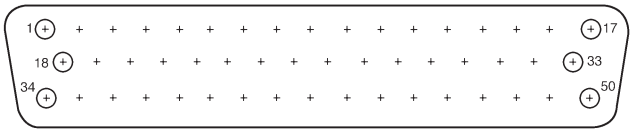

50 Position
(Shell Size 5)
MS 18277-1

Note: Mating face of plug shown; receptacle is mirror image.

Performance Specifications

All Series 109 AMPLIMITE military connectors conform to the latest amendments of military specification MIL-DTL-24308. For more detailed information refer to MIL-DTL-24308.

All Series 109 Connectors are designed for a –67°F to 257°F [–55°C to +125°C] temperature range.

Series 109 contact current rating for Crimp Snap Connectors for MIL-C-39029 7.5 amps in free air.

Series 109 contact current rating for PCB Mount Connectors 5.0 amps per 108-1770.

Technical Documents List

The following technical documents cover the application and performance of AMPLIMITE Series 109 Connectors, contacts, tooling and accessories.

Military Specifications

MIL-DTL-24308	Connectors, Electric, Rectangular, Miniature Polarized Shell, Rack and Panel, General Specifications for
AS39029	Contacts, Electrical Connector, General Specification for

NASA Specification

GSFC-S-311-P-4	Non-Magnetic Connectors, General Specification for

Instruction Sheets

408-7516	Application Tooling for MIL-C-39029 Contacts
408-7634	Application and Maintenance for Hand Crimping Tool 90302-1
408-7694-1	Application and Maintenance for Hand Crimping Tool 90312-1
408-7954	Application and Maintenance for Hand Crimping Tool 90374-1
408-7508	Insertion/Extraction Tools 91067-1, 91067-2 and 91067-3
408-7837	Female Screwlock Kit 205817-1 and Male Screw/Retainer Kit 211883-5

Catalog 1308940
Revised 9-14

www.te.com

Dimensions are shown for reference purposes only. Specifications subject to change.

Dimensions are in millimeters unless otherwise specified.

USA: +1 800 522 6752
Asia Pacific: +86 0 400 820 6015
UK: +44 800 267 666

For additional support numbers please visit www.te.com

AMPLIMITE Connectors, Series 109 (Continued)

Size 20 Crimp Contacts for Series 109 Connectors (AS39029)

Size 20 Crimp, Snap-In Contacts .040 [1.02] Pin Diameter

Material and Finish

Pin and Socket Body —
[a]**Contact Body** — Copper alloy, gold flash .000050–.000100 [0.00127–0.00254] thick nickel underplate.
[a]**Mating Area** — Copper alloy, plated gold .000050 min thick over .000050–.000100 [0.00127–0.00254] thick nickel underplate.
[b]**Contact Body & Mating Area** — Copper alloy, plated gold .000050–.000100 [0.00127–0.00254] thick over .000050–.000100 [0.00127–0.00254] thick nickel underplate.
Socket Hood — Passivated stainless steel.

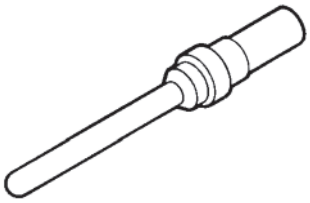

Pin
M39029/64-369
(Supersedes M24308/11-1)

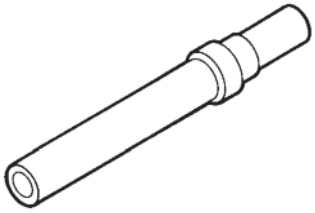

Socket
M39029/63-368
(Supersedes M24308/10-1)

Wire Size Range AWG	Wire Size Range [mm²]	Ins. Dia. (Max.)	Contact Configuration	Tape Mounted Contacts Part Number	Loose Piece Contacts: Military Part No. (M39029/)	Loose Piece Contacts: AMP Part No.	Hand Tool: Tool No. (M22520/)	Hand Tool: Positioner No. (M22520/)	Contact Color Band
20-24	0.6-0.2	**.072** 1.83	Pin	205089-2[a]	64-369	205089-1[a]	02-01	02-08	orange, blue, white
			Socket	205090-2[a]	63-368	205090-1[a]	02-01	02-08	orange, blue, gray
20-24	0.6-0.2	**.072** 1.83	Pin	1-205089-3[b]	64-369	1-205089-2[b]	02-01	02-08	orange, blue, white
			Socket	1-205090-0[b]	63-368	205090-9[b]	02-01	02-08	orange, blue, gray

Tape mounted contacts are used in the AMP-TAPEMATIC Stripper/Crimper Machine Part Number **599406-7** (page 8-89).

Notes: 1. These contacts are used in Series 109 military connectors.
2. Insertion/Extraction Tool Part Number **91067-2** (Military Part Number **M81969/1-02**) is used to install and remove pin and socket contacts.
3. See Instruction Sheet 408-7516 for wire length, tool and selector settings.
4. Color bands are read in the direction of terminal (wire barrel) end to mating end.

Size 20 Crimp Contacts for Series 109 Connectors (Industrial Grade)

Size 20 Crimp, Snap-In Contacts .040 [1.02] Pin Diameter

Material and Finish

Pin and Socket Body —
Pin Body — Brass, plated gold .000030 [0.00076] min thick over .000050–.000150 [0.00127–0.00381] thick nickel underplate.
Socket Body — Brass, plated gold .000010 [0.00025] min thick over .000050–.000150 [0.00127–0.00381] thick nickel underplate.
Socket Clip — Copper alloy, plated gold .000050 [0.00013] min thick over .000050–.000150 [0.00127–0.00381] thick nickel underplate.

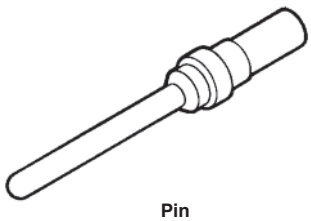

Pin

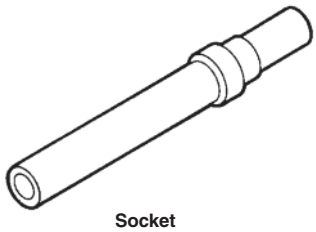

Socket

Wire Size Range AWG	Wire Size Range [mm²]	Ins. Dia. (Max.)	Contact Configuration	Tape Mounted Contacts Part Number	Loose Piece Contacts Part Number	Hand Tool: Tool No. (M22520/)	Hand Tool: Positioner No. (M22520/)
20-24	0.6-0.2	**.072** 1.83	Pin	1218266-4	1218266-3	02-01	02-08
			Socket	1218267-4	1218267-3	02-01	02-08
18	0.8	**.083** 2.11	Pin	1218266-2	1218266-1	02-01	02-08
			Socket	1218267-2	1218267-1	02-01	02-08

Tape mounted contacts are used in the AMP-TAPEMATIC Stripper/Crimper Machine Part Number **599406-7** (page 8-89).

Notes: 1. These contacts are used in Series 109 connectors.
2. Insertion/Extraction Tool Part Number **91067-2** (Military Part Number **M81969/1-02**) is used to install and remove pin and socket contacts.
3. See Instruction Sheet 408-7516 for wire length, tool and selector settings.

Dimensions are shown for reference purposes only. Specifications subject to change.

Dimensions are in millimeters unless otherwise specified.

USA: +1 800 522 6752
Asia Pacific: +86 0 400 820 6015
UK: +44 800 267 666

For additional support numbers please visit www.te.com

AMPLIMITE Connectors, Series 109 (Continued)

Size 20 Posted Contacts for Series 109 Connectors

Material and Finish

Pin and Socket Body —
Leaded nickel copper or beryllium copper, plated per chart below

Socket Hood —
See chart below

Pin and Socket Insertion/Extraction Tool

AMP Part Number 91067-2 or
MIL Number M81969/1-02

Insertion tip, for replacement
Part Number 126195-3

Extraction tip, for replacement
Part Number 126195-4

Notes:
1. Contacts on this page can be used with connectors on pages 8-43 to 8-48, 8-62, 8-63 and 8-84.
2. Mating End of pin and socket complies with MIL-C-39029.
3. See page 8-91 for PCB layouts.

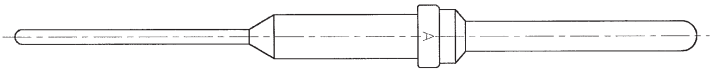

Pin
(See Drawing Number 212565 for Latest Configuration)

Socket
(See Drawing Number 208778 for Latest Configuration)

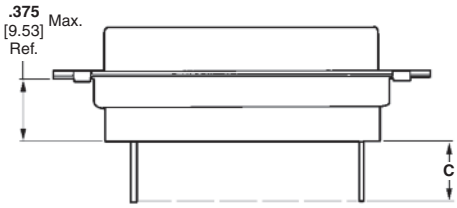

Post Extension When Used in a Standard Connector

Post Diameter ± .002 [± .050]	Post Extension C ± .025 [± 0.63]	Part Numbers Pin	Part Numbers Socket	Contact Plating	Socket Hood Material and Finish
.018 0.46	**.325** 8.25	1-212565-0	1-208778-0	Gold .000050–.000100 [0.00127–0.00254] thick over .000150–.000250 [0.00381–0.00635] thick copper underplate	Passivated Stainless Steel
.018 0.46	**.325** 8.25	—	1-208778-1	Gold .000050–.000100 [0.00127–0.00254] thick over .000050–.000150 [0.00127–0.00381] thick nickel underplate	Passivated Stainless Steel
.018 0.46	**.240** 6.10	—	1-208778-2	Gold .000050–.000100 [0.00127–0.00254] thick over .000150–.000250 [0.00381–0.00635] thick copper underplate	Passivated Stainless Steel

Dimensions are shown for reference purposes only. Specifications subject to change.

Dimensions are in millimeters unless otherwise specified.

USA: +1 800 522 6752
Asia Pacific: +86 0 400 820 6015
UK: +44 800 267 666

For additional support numbers please visit www.te.com

AMPLIMITE Connectors, Series 109 (Continued)

Size 20 Posted Contacts for Series 109 Connectors (High Current Upgrade Program)

The High Current Size 20 contact has been designed to fit into the Series 109 AMPLIMITE Connectors per MIL-C-24308.

Material

Body — Copper Alloy
Louvertac Band — Beryllium Copper

Finish

Body — Gold
Louvertac Band — Gold

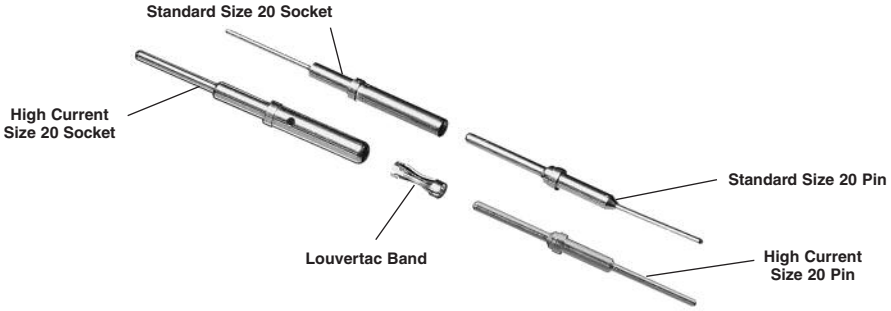

Current-Carrying Capacity. The High Current Size 20 contact with a 20 gage wire attached to the .030 [.762] diameter solder tail acquired an initial 86°F [30°C] T-Rise of 11.85 amps in free air.

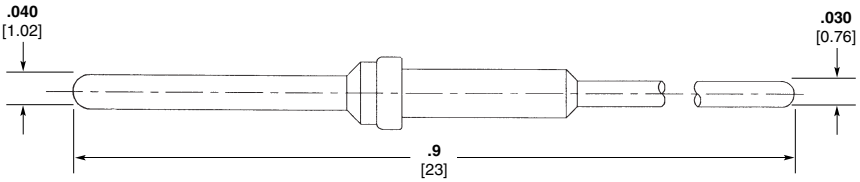

Pin Part Number 194081-1

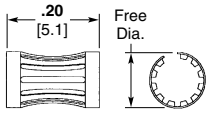

Multiple contact point due to hyperbolic shape.

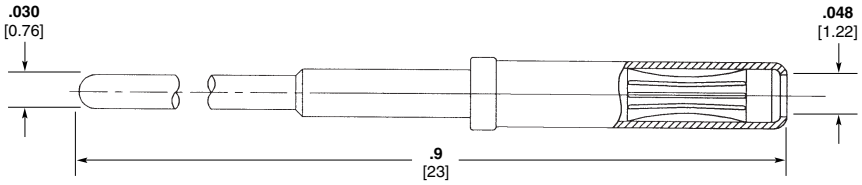

Socket Part Number 194083-1

The contacts can be sold loose piece or installed into any of the MIL Standard connectors.

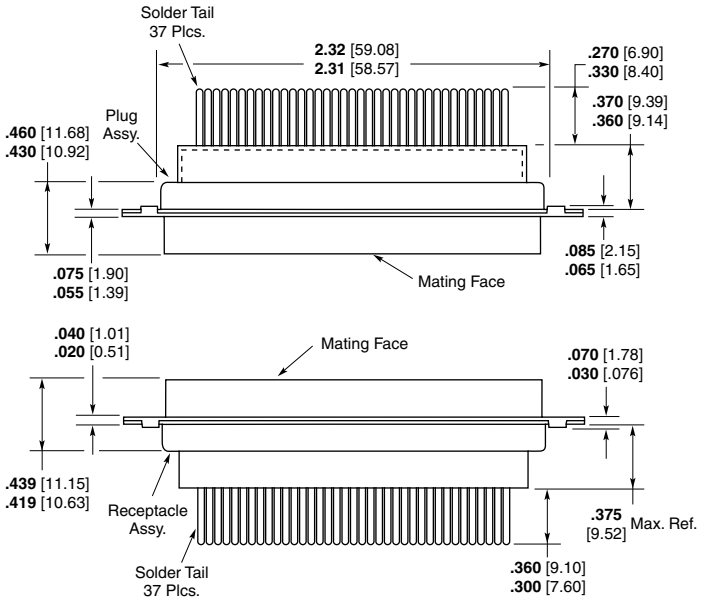

Typical Fully-Loaded 37 Position Plug and Receptacle

Pin and Socket Insertion/Extraction Tool

Part Number 91067-2 or MIL number M81969/1-02

Insertion tip, for replacement Part Number 126195-3

Extraction tip, for replacement Part Number 126195-4

Note: 1. High Current contacts with Louvertac bands are NOT intermateable with any other contact.

Dimensions are shown for reference purposes only. Specifications subject to change.

Dimensions are in millimeters unless otherwise specified.

USA: +1 800 522 6752
Asia Pacific: +86 0 400 820 6015
UK: +44 800 267 666

For additional support numbers please visit www.te.com

AMPLIMITE Connectors, Series 109 (Continued)

Crimp, Series 109, Standard Density Connectors (MIL Qualified)

Material and Finish

Shell — Steel, cadmium plated

Insert — Approved material per MIL-DTL-24308

Retention Clips — Stainless steel

Related Product Data

Cavity Identification — page 8-39

Contacts — pages 8-40 to 8-42

Mounting, Mating Specifications — page 8-90

Accessories — pages 8-95 to 8-97

Attention: Connector Marking

Connector marking may differ from package marking. All connectors marked per MIL-DTL-24308.

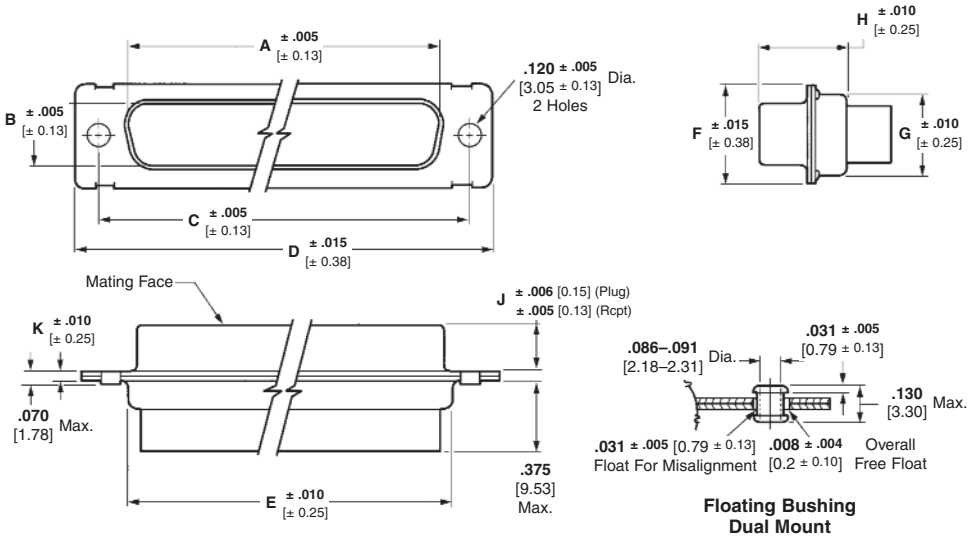

Series 109 Plugs per MIL-DTL-24308

No. of Contact Pos. (Shell Size)	Dimensions A (Inside)	B (Inside)	C	D	E	F	G	H	J	K	Standard Mount Military Part No. M24308/	Standard Mount AMP Part No.	Floating Bushing Mount Military Part No. M24308/	Floating Bushing Mount AMP Part No.	Description
9 (1)	**.666** 16.92	**.329** 8.36	**.984** 24.99	**1.213** 30.81	**.759** 19.28	**.494** 12.55	**.422** 10.72	**.422** 10.72	**.235** 5.97	**.030** 0.76	4-259F	205162-1	4-324F	205412-1	Plug only
											4-1F	205556-2	4-302F	205486-2	Plug with pins
15 (2)	**.994** 25.25	**.329** 8.36	**1.312** 33.32	**1.541** 39.14	**1.083** 27.51	**.494** 12.55	**.422** 10.72	**.422** 10.72	**.235** 5.97	**.030** 0.76	4-260F	205164-1	4-325F	205408-1	Plug only
											4-2F	205558-2	4-303F	205409-2	Plug with pins
25 (3)	**1.534** 38.96	**.329** 8.36	**1.852** 47.04	**2.088** 53.04	**1.625** 41.3	**.494** 12.55	**.422** 10.72	**.426** 10.82	**.230** 5.84	**.039** 0.99	4-261F	205166-1	4-326F	205413-1	Plug only
											4-3F	205560-2	4-304F	205487-2	Plug with pins
37 (4)	**2.182** 55.42	**.329** 8.36	**2.500** 63.5	**2.729** 69.32	**2.272** 57.71	**.494** 12.55	**.422** 10.72	**.426** 10.82	**.230** 5.84	**.039** 0.99	4-262F	205168-1	4-327F	205414-1	Plug only
											4-4F	205562-2	4-305F	205488-2	Plug with pins
50 (5)	**2.079** 52.81	**.441** 11.2	**2.406** 61.11	**2.635** 66.93	**2.178** 55.32	**.605** 15.37	**.534** 13.56	**.426** 10.82	**.230** 5.84	**.039** 0.99	4-263F	205170-1	4-328F	205415-1	Plug only
											4-5F	205564-2	4-306F	205431-2	Plug with pins

Series 109 Receptacles per MIL-DTL-24308

No. of Contact Pos. (Shell Size)	Dimensions A (Outside)	B (Outside)	C	D	E	F	G	H	J	K	Standard Mount Military Part No. M24308/	Standard Mount AMP Part No.	Floating Bushing Mount Military Part No. M24308/	Floating Bushing Mount AMP Part No.	Description
9 (1)	**.643** 16.33	**.311** 7.9	**.984** 24.99	**1.213** 30.81	**.759** 19.28	**.494** 12.55	**.422** 10.72	**.429** 10.9	**.243** 6.17	**.030** 0.76	2-281F	205161-1	2-292F	205416-1	Recept. only
											2-1F	205555-2	2-23F	205483-2	Recept. with sockets
15 (2)	**.971** 24.66	**.311** 7.9	**1.312** 33.32	**1.541** 39.14	**1.083** 27.51	**.494** 12.55	**.422** 10.72	**.429** 10.9	**.243** 6.17	**.030** 0.76	2-282F	205163-1	2-293F	205417-1	Recept. only
											2-2F	205557-2	2-24F	205433-2	Recept. with sockets
25 (3)	**1.511** 38.38	**.311** 7.9	**1.852** 47.04	**2.088** 53.04	**1.625** 41.3	**.494** 12.55	**.422** 10.72	**.429** 10.9	**.243** 6.17	**.039** 0.99	2-283F	205165-1	2-294F	205418-1	Recept. only
											2-3F	205559-2	2-25F	205484-2	Recept. with sockets
37 (4)	**2.159** 54.84	**.311** 7.9	**2.500** 63.5	**2.729** 69.32	**2.272** 57.71	**.494** 12.55	**.422** 10.72	**.429** 10.9	**.243** 6.17	**.039** 0.99	2-284F	205167-1	2-295F	205419-1	Recept. only
											2-4F	205561-2	2-26F	205485-2	Recept. with sockets
50 (5)	**2.064** 52.43	**.423** 10.74	**2.406** 61.11	**2.635** 66.93	**2.178** 55.32	**.605** 15.37	**.534** 13.56	**.429** 10.9	**.243** 6.17	**.039** 0.99	2-285F	205169-1	2-296F	205420-1	Recept. only
											2-5F	205563-2	2-27F	205432-2	Recept. with sockets

Notes: 1. Size 20 contacts supplied with connectors are loose piece.
2. "F" is stamped on connectors following **M24308** Part Number as required. -"F" designates cadmium shell plating.
3. See pages 8-99 through 8-103 (Military to AMP Part Number cross reference) for additional part numbers.

Dimensions are shown for reference purposes only. Specifications subject to change.

Dimensions are in millimeters unless otherwise specified.

USA: +1 800 522 6752
Asia Pacific: +86 0 400 820 6015
UK: +44 800 267 666

For additional support numbers please visit www.te.com

AMPLIMITE Connectors, Series 109 (Continued)

Crimp, Series 109, Standard Density Connectors (MIL Qualified) — Zinc Plated RoHS Compliant

Material and Finish

Shell — Steel, zinc plated

Insert — Approved material per MIL-DTL-24308

Retention Clips — Stainless steel

Related Product Data:

Cavity Identification — page 8-39

Contacts — pages 8-40 to 8-42

Mounting, Mating Specifications — page 8-90

Accessories — pages 8-95 to 8-97

Attention: Connector Marking

Connector marking may differ from package marking. All connectors marked per MIL-DTL-24308.

RoHS Ready

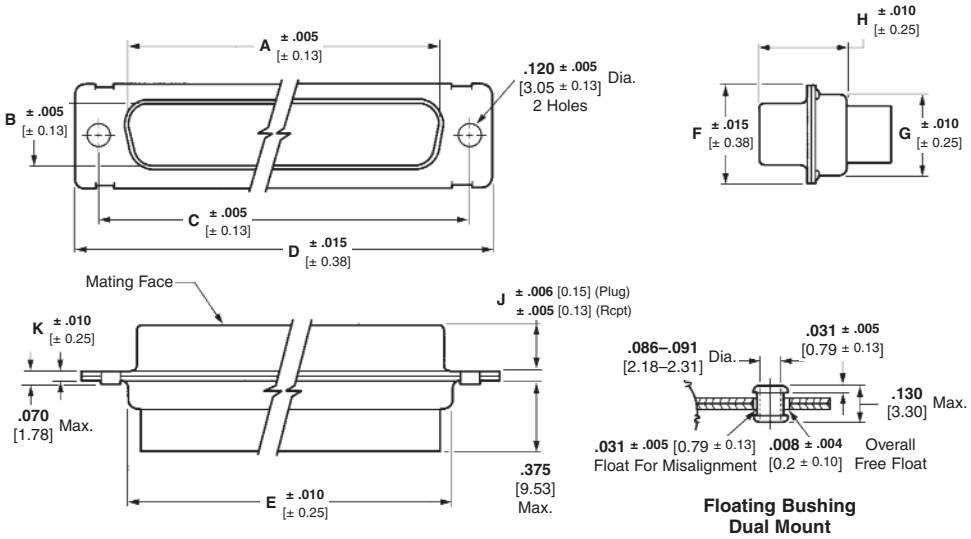

Series 109 Plugs per MIL-DTL-24308

No. of Contact Pos. (Shell Size)	Dimensions A (Inside)	B (Inside)	C	D	E	F	G	H	J	K	Standard Mount Military Part No. M24308/	Standard Mount AMP Part No.	Floating Bushing Mount Military Part No. M24308/	Floating Bushing Mount AMP Part No.	Description
9	**.666**	**.329**	**.984**	**1.213**	**.759**	**.494**	**.422**	**.422**	**.235**	**.030**	4-259	1757819-1	4-324	1757821-1	Plug only
(1)	16.92	8.36	24.99	30.81	19.28	12.55	10.72	10.72	5.97	0.76	4-1	1757819-6	4-302	1757821-6	Plug with pins
15	**.994**	**.329**	**1.312**	**1.541**	**1.083**	**.494**	**.422**	**.422**	**.235**	**.030**	4-260	1757819-2	4-325	1757821-2	Plug only
(2)	25.25	8.36	33.32	39.14	27.51	12.55	10.72	10.72	5.97	0.76	4-2	1757819-7	4-303	1757821-7	Plug with pins
25	**1.534**	**.329**	**1.852**	**2.088**	**1.625**	**.494**	**.422**	**.426**	**.230**	**.039**	4-261	1757819-3	4-326	1757821-3	Plug only
(3)	38.96	8.36	47.04	53.04	41.3	12.55	10.72	10.82	5.84	0.99	4-3	1757819-8	4-304	1757821-8	Plug with pins
37	**2.182**	**.329**	**2.500**	**2.729**	**2.272**	**.494**	**.422**	**.426**	**.230**	**.039**	4-262	1757819-4	4-327	1757821-4	Plug only
(4)	55.42	8.36	63.5	69.32	57.71	12.55	10.72	10.82	5.84	0.99	4-4	1757819-9	4-305	1757821-9	Plug with pins
50	**2.079**	**.441**	**2.406**	**2.635**	**2.178**	**.605**	**.534**	**.426**	**.230**	**.039**	4-263	1757819-5	4-328	1757821-5	Plug only
(5)	52.81	11.2	61.11	66.93	55.32	15.37	13.56	10.82	5.84	0.99	4-5	1-1757819-0	4-306	1-1757821-0	Plug with pins

Series 109 Receptacles per MIL-DTL-24308

No. of Contact Pos. (Shell Size)	Dimensions A (Outside)	B (Outside)	C	D	E	F	G	H	J	K	Standard Mount Military Part No. M24308/	Standard Mount AMP Part No.	Floating Bushing Mount Military Part No. M24308/	Floating Bushing Mount AMP Part No.	Description
9	**.643**	**.311**	**.984**	**1.213**	**.759**	**.494**	**.422**	**.429**	**.243**	**.030**	2-281	1757820-1	2-292	1757822-1	Recept. only
(1)	16.33	7.9	24.99	30.81	19.28	12.55	10.72	10.9	6.17	0.76	2-1	1757820-6	2-23	1757822-6	Recept. with sockets
15	**.971**	**.311**	**1.312**	**1.541**	**1.083**	**.494**	**.422**	**.429**	**.243**	**.030**	2-282	1757820-2	2-293	1757822-2	Recept. only
(2)	24.66	7.9	33.32	39.14	27.51	12.55	10.72	10.9	6.17	0.76	2-2	1757820-7	2-24	1757822-7	Recept. with sockets
25	**1.511**	**.311**	**1.852**	**2.088**	**1.625**	**.494**	**.422**	**.429**	**.243**	**.039**	2-283	1757820-3	2-294	1757822-3	Recept. only
(3)	38.38	7.9	47.04	53.04	41.3	12.55	10.72	10.9	6.17	0.99	2-3	1757820-8	2-25	1757822-8	Recept. with sockets
37	**2.159**	**.311**	**2.500**	**2.729**	**2.272**	**.494**	**.422**	**.429**	**.243**	**.039**	2-284	1757820-4	2-295	1757822-4	Recept. only
(4)	54.84	7.9	63.5	69.32	57.71	12.55	10.72	10.9	6.17	0.99	2-4	1757820-9	2-26	1757822-9	Recept. with sockets
50	**2.064**	**.423**	**2.406**	**2.635**	**2.178**	**.605**	**.534**	**.429**	**.243**	**.039**	2-285	1757820-5	2-296	1757822-5	Recept. only
(5)	52.43	10.74	61.11	66.93	55.32	15.37	13.56	10.9	6.17	0.99	2-5	1-1757820-0	2-27	1-1757822-0	Recept. with sockets

Notes: 1. Size 20 contacts supplied with connectors are loose piece.
2. See pages 8-99 through 8-103 (Military to AMP Part Number cross reference) for additional part numbers.

Dimensions are shown for reference purposes only. Specifications subject to change.

Dimensions are in millimeters unless otherwise specified.

USA: +1 800 522 6752
Asia Pacific: +86 0 400 820 6015
UK: +44 800 267 666

For additional support numbers please visit www.te.com

AMPLIMITE Connectors, Series 109 (Continued)

Crimp, Series 109, Standard Density Connectors (Industrial Grade)

Material and Finish

Shell — Steel, zinc plated

Insert — Approved material per MIL-DTL-24308

Retention Clips — Stainless steel

Related Product Data

Cavity Identification — page 8-39

Contacts — pages 8-40 to 8-42

Mounting, Mating Specifications — page 8-90

Accessories — pages 8-95 to 8-97

Attention: Connector Marking

Connector marking may differ from package marking.

Note: Meets requirements of MIL-DTL-24308

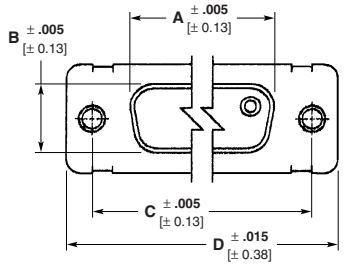

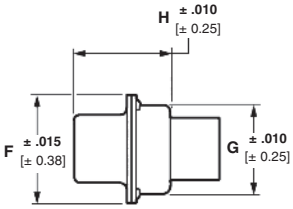

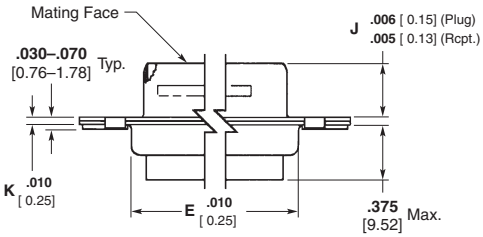

Clinch Nut Mount

Series 109 Plugs

No. of Contact Pos. (Shell Size)	Dimensions										Standard Mount Part Number	Description
	A (Inside)	B (Inside)	C	D	E	F	G	H	J	K		
9 (1)	**.666** 16.92	**.329** 8.36	**.984** 24.99	**1.213** 30.81	**.759** 19.28	**.494** 12.55	**.422** 10.72	**.422** 10.72	**.235** 5.97	**.030** 0.76	1218748-1	Plug only
15 (2)	**.994** 25.25	**.329** 8.36	**1.312** 33.32	**1.541** 39.14	**1.083** 27.51	**.494** 12.55	**.422** 10.72	**.422** 10.72	**.235** 5.97	**.030** 0.76	1218748-2	Plug only
25 (3)	**1.534** 38.96	**.329** 8.36	**1.852** 47.04	**2.088** 53.04	**1.625** 41.3	**.494** 12.55	**.422** 10.72	**.426** 10.82	**.230** 5.84	**.039** 0.99	1218748-3	Plug only
37 (4)	**2.182** 55.42	**.329** 8.36	**2.500** 63.5	**2.729** 69.32	**2.272** 57.71	**.494** 12.55	**.422** 10.72	**.426** 10.82	**.230** 5.84	**.039** 0.99	1218748-4	Plug only
50 (5)	**2.079** 52.81	**.441** 11.2	**2.406** 61.11	**2.635** 66.93	**2.178** 55.32	**.605** 15.37	**.534** 13.56	**.426** 10.82	**.230** 5.84	**.039** 0.99	1218748-5	Plug. only

Clinch Nut Mount available, contact TE.

Series 109 Receptacles

No. of Contact Pos. (Shell Size)	Dimensions										Clinch Nut Mount Part Number	Description
	A (Inside)	B (Inside)	C	D	E	F	G	H	J	K		
9 (1)	**.643** 16.33	**.311** 7.9	**.984** 24.99	**1.213** 30.81	**.759** 19.28	**.494** 12.55	**.422** 10.72	**.429** 10.9	**.243** 6.17	**.030** 0.76	1218749-1	Recept. only
15 (2)	**.971** 24.66	**.311** 7.9	**1.312** 33.32	**1.541** 39.14	**1.083** 27.51	**.494** 12.55	**.422** 10.72	**.429** 10.9	**.243** 6.17	**.030** 0.76	1218749-2	Recept. only
25 (3)	**1.511** 38.38	**.311** 7.9	**1.852** 47.04	**2.088** 53.04	**1.625** 41.3	**.494** 12.55	**.422** 10.72	**.429** 10.9	**.243** 6.17	**.039** 0.99	1218749-3	Recept. only
37 (4)	**2.159** 54.84	**.311** 7.9	**2.500** 63.5	**2.729** 69.32	**2.272** 57.71	**.494** 12.55	**.422** 10.72	**.429** 10.9	**.243** 6.17	**.039** 0.99	1218749-4	Recept. only
50 (5)	**2.064** 52.43	**.423** 10.74	**2.406** 61.11	**2.635** 66.93	**2.178** 55.32	**.605** 15.37	**.534** 13.56	**.429** 10.9	**.243** 6.17	**.039** 0.99	1218749-5	Recept. only

Standard Mount available, contact TE.

AMPLIMITE Connectors, Series 109 (Continued)

Non-Magnetic Crimp Plugs, Series 109, Standard Density Connectors (NASA Qualified)

Connector Material and Finish

Shell — Brass, gold plated

Insert — Approved material per MIL-DTL-24308

Retention Clips — Copper alloy

Related Product Data

Cavity Identification — page 8-39

Mounting, Mating Specifications — page 8-90

Accessories — pages 8-95 to 8-97

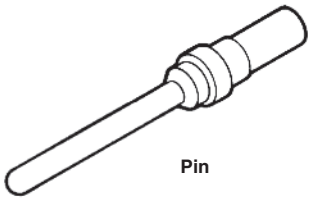

Pin

Pin Contact

Wire Size Range	AMP Part No. / NASA No.
26-28 0.15-0.08	206794-2 —
20-24 0.6-0.2	205089-4 G-10-P1

Strip length .140 [3.56]
Max. insulation diameter .072 [1.83]

Hand tool M22520/2-01 or AMP Part Number 601966-1

Positioner M22520/2-08 or AMP Part Number 601966-5

Contact Material and Finish

Copper alloy plated gold .000050–.000100 [0.00127–0.00254] thick over .000100–.000150 [0.00254–0.00381] copper underplate

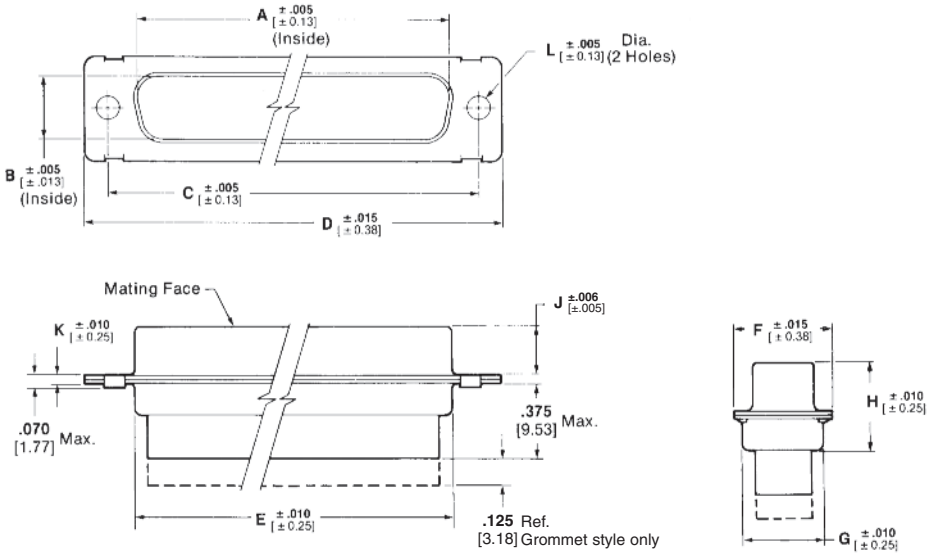

Non-Magnetic Plugs per NASA Specification

No. of Contact Pos. (Shell Size)	Dimensions A	B	C	D	E	F	G	H	J	K	L	NASA Number	AMP Part Number
9 (1)	**.666** 16.92	**.329** 8.36	**.984** 24.99	**1.213** 30.81	**.759** 19.28	**.494** 12.55	**.422** 10.72	**.422** 10.72	**.235** 5.97	**.030** 0.76	**.154** 3.91	311P409-1P-B-15	207252-1
											.120 3.05	311P409-1P-B-12	207252-2
15 (2)	**.994** 25.25	**.329** 8.36	**1.312** 33.32	**1.541** 39.14	**1.083** 27.51	**.494** 12.55	**.422** 10.72	**.422** 10.72	**.235** 5.97	**.030** 0.76	**.154** 3.91	311P409-2P-B-15	206798-1
											.120 3.05	311P409-2P-B-12	206798-2
25 (3)	**1.534** 38.96	**.329** 8.36	**1.852** 47.04	**2.088** 53.04	**1.625** 41.3	**.494** 12.55	**.422** 10.72	**.426** 10.82	**.230** 5.84	**.039** 0.99	**.154** 3.91	311P409-3P-B-15	206800-1
											.120 3.05	311P409-3P-B-12	206800-2
37 (4)	**2.182** 55.42	**.329** 8.36	**2.500** 63.5	**2.729** 69.32	**2.272** 57.71	**.494** 12.55	**.422** 10.72	**.426** 10.82	**.230** 5.84	**.039** 0.99	**.154** 3.91	311P409-4P-B-15	206802-1
											.120 3.05	311P409-4P-B-12	206802-2
50 (5)	**2.079** 52.81	**.441** 11.20	**2.406** 61.11	**2.635** 66.93	**2.178** 55.32	**.605** 15.37	**.534** 13.56	**.426** 10.82	**.230** 5.84	**.039** 0.99	**.154** 3.91	311P409-5P-B-15	206804-1
											.120 3.05	311P409-5P-B-12	206804-2

Pin and Socket Insertion/Extraction Tool

AMP Part Number 91067-2 or MIL Number M81969/1-02

Insertion tip, for replacement Part Number 126195-3

Extraction tip, for replacement Part Number 126195-4

Non-Magnetic Plugs With Silicone Rubber Rear Grommet[1]

No. of Contact Pos. (Shell Size)	Dimensions A	B	C	D	E	F	G	H	J	K	L	Part Number
9 (1)	**.666** 16.92	**.329** 8.36	**.984** 24.99	**1.213** 30.81	**.759** 19.28	**.494** 12.55	**.422** 10.72	**.422** 10.72	**.235** 5.97	**.030** 0.76	**.120** 3.05	211638-4
15 (2)	**.994** 25.25	**.329** 8.36	**1.312** 33.32	**1.541** 39.14	**1.083** 27.51	**.494** 12.55	**.422** 10.72	**.422** 10.72	**.235** 5.97	**.030** 0.76	**.120** 3.05	211639-4
25 (3)	**1.534** 38.96	**.329** 8.36	**1.852** 47.04	**2.088** 53.04	**1.625** 41.3	**.494** 12.55	**.422** 10.72	**.426** 10.82	**.230** 5.84	**.039** 0.99	**.120** 3.05	211640-4
37 (4)	**2.182** 55.42	**.329** 8.36	**2.500** 63.5	**2.729** 69.32	**2.272** 57.71	**.494** 12.55	**.422** 10.72	**.426** 10.82	**.230** 5.84	**.039** 0.99	**.120** 3.05	211641-4
50 (5)	**2.079** 52.81	**.441** 11.20	**2.406** 61.11	**2.635** 66.93	**2.178** 55.32	**.605** 15.37	**.534** 13.56	**.426** 10.82	**.230** 5.84	**.039** 0.99	**.120** 3.05	211642-4

[1] Grommet provided for cable strain relief.

AMPLIMITE Connectors, Series 109 (Continued)

Non-Magnetic Crimp Receptacles, Series 109, Standard Density Connectors (NASA Qualified)

Connector Material and Finish

Shell — Brass, gold plated

Insert — Approved material per MIL-DTL-24308

Retention Clips — Copper alloy

Related Product Data

Cavity Identification — page 8-39

Mounting, Mating Specifications — page 8-90

Accessories — pages 8-95 to 8-97

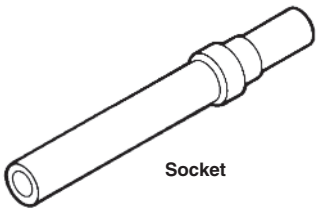

Socket

Socket Contact

Wire Size Range	AMP Part No. / NASA No.
26-28 0.15-0.08	206795-1 —
20-24 0.6-0.2	206793-1 G-10-S1

Strip length .140 [3.56]
Max. insulation diameter .072 [1.83]

Hand tool M22520/2-01 or AMP Part Number 601966-1

Positioner M22520/2-08 or AMP Part Number 601966-5

Contact Material and Finish

Copper alloy plated gold .000050–.000100 [0.00127–0.00254] thick over .000100–.000150 [0.00254–0.00381] copper underplate

Pin and Socket Insertion/Extraction Tool

AMP Part Number 91067-2 or MIL Number M81969/1-02

Insertion tip, for replacement Part Number 126195-3

Extraction tip, for replacement Part Number 126195-4

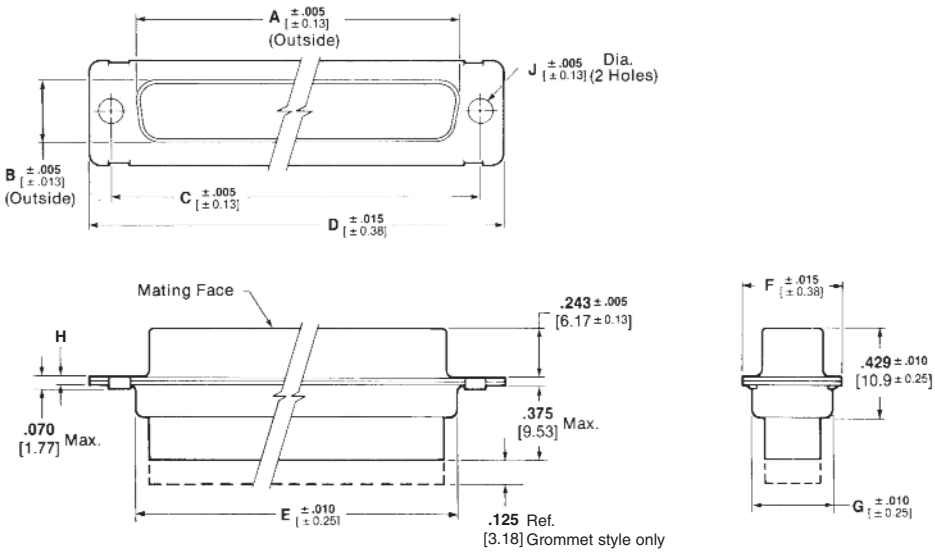

Non-Magnetic Receptacles per NASA Specification

No. of Contact Pos. (Shell Size)	Dimensions A	B	C	D	E	F	G	H	J	NASA Number	AMP Part Number
9 (1)	**.643** 16.33	**.311** 7.9	**.984** 24.99	**1.213** 30.81	**.759** 19.28	**.494** 12.55	**.422** 10.72	**.030** 0.76	**.154** 3.91	311P409-1S-B-15	207253-1
									.120 3.05	311P409-1S-B-12	207253-2
15 (2)	**.971** 24.66	**.311** 7.9	**1.312** 33.32	**1.541** 39.14	**1.083** 27.51	**.494** 12.55	**.422** 10.72	**.030** 0.76	**.154** 3.91	311P409-2S-B-15	206799-1
									.120 3.05	311P409-2S-B-12	206799-2
25 (3)	**1.511** 38.38	**.311** 7.9	**1.852** 47.04	**2.088** 53.04	**1.625** 41.3	**.494** 12.55	**.422** 10.72	**.039** 0.99	**.154** 3.91	311P409-3S-B-15	206801-1
									.120 3.05	311P409-3S-B-12	206801-2
37 (4)	**2.159** 55.42	**.311** 7.9	**2.500** 63.5	**2.729** 69.32	**2.272** 57.71	**.494** 12.55	**.422** 10.72	**.039** 0.99	**.154** 3.91	311P409-4S-B-15	206803-1
									.120 3.05	311P409-4S-B-12	206803-2
50 (5)	**2.064** 52.43	**.423** 10.74	**2.406** 61.11	**2.635** 66.93	**2.178** 55.32	**.605** 15.37	**.534** 13.56	**.039** 0.99	**.154** 3.91	311P409-5S-B-15	206805-1
									.120 3.05	311P409-5S-B-12	206805-2

Non-Magnetic Receptacles With Silicone Rubber Rear Grommet[1]

No. of Contact Pos. (Shell Size)	Dimensions A	B	C	D	E	F	G	H	J	Part Number
9 (1)	**.643** 16.33	**.311** 7.9	**.984** 24.99	**1.213** 30.81	**.759** 19.28	**.494** 12.55	**.422** 10.72	**.030** 0.76	**.120** 3.05	211633-4
15 (2)	**.971** 24.66	**.311** 7.9	**1.312** 33.32	**1.541** 39.14	**1.083** 27.51	**.494** 12.55	**.422** 10.72	**.030** 0.76	**.120** 3.05	211634-4
25 (3)	**1.511** 38.38	**.311** 7.9	**1.852** 47.04	**2.088** 53.04	**1.625** 41.3	**.494** 12.55	**.422** 10.72	**.039** 0.99	**.120** 3.05	211635-4
37 (4)	**2.159** 54.84	**.311** 7.9	**2.500** 63.5	**2.729** 69.32	**2.272** 57.71	**.494** 12.55	**.422** 10.72	**.039** 0.99	**.120** 3.05	211636-4
50 (5)	**2.064** 52.43	**.423** 10.74	**2.406** 61.11	**2.635** 66.93	**2.178** 55.32	**.605** 15.37	**.534** 13.56	**.039** 0.99	**.120** 3.05	211637-4

[1] Grommet provided for cable strain relief.

Catalog 1308940
Revised 9-14

www.te.com

Dimensions are shown for reference purposes only. Specifications subject to change.

Dimensions are in millimeters unless otherwise specified.

USA: +1 800 522 6752
Asia Pacific: +86 0 400 820 6015
UK: +44 800 267 666

For additional support numbers please visit www.te.com

AMPLIMITE Connectors, Series 109 (Continued)

Crimp, Blindmate Plugs, Series 109, Standard Density Connectors

Materials and Finish

[1] **Shell, Front** — Aluminum alloy, cadmium plated with yellow chromate

[2] **Shell, Front** — Aluminum alloy, zinc plated with yellow trichromate

[1] **Shell, Rear** — Steel, cadmium plated with yellow chromate

[2] **Shell, Rear** — Steel, zinc plated with yellow trichromate

Insert Assembly — Approved material per MIL-DTL-24308

Retention Clips — Stainless steel

Related Product Data

Cavity Identification — page 8-39

Contacts — pages 8-40 to 8-42

Mounting Specifications — page 8-90

Mating information contained on page 8-90 does not pertain to Blindmate design. Flange to flange spacing can be a max. of .270 [6.86].

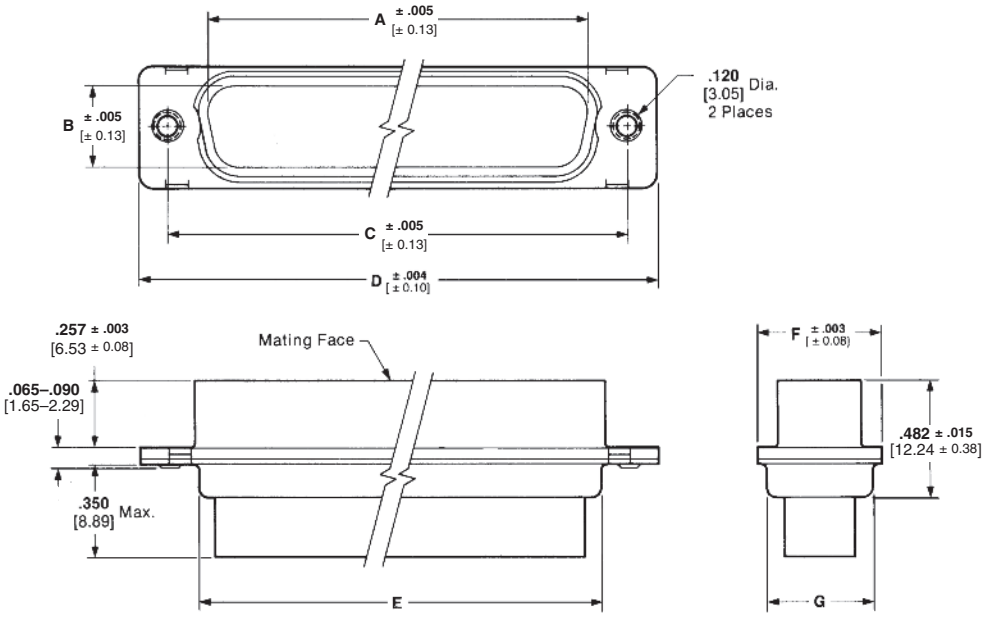

No. of Contact Pos. (Shell Size)	Dimensions A	B	C	D	E	F	G	Part Number
9 (1)	**.656** 16.66	**.324** 8.23	**.984** 24.99	**1.224** 31.09	**.769/.750** 19.53/19.05	**.506** 12.85	**.432/.413** 10.97/10.49	445005-1[1] 5-445005-1[2]
15 (2)	**.984** 25.0	**.324** 8.23	**1.312** 33.32	**1.552** 39.42	**1.093/1.074** 27.76/27.28	**.506** 12.85	**.432/.413** 10.97/10.49	445006-1[1] 5-445006-1[2]
25 (3)	**1.524** 38.71	**.324** 8.23	**1.852** 47.04	**2.099** 53.31	**1.635/1.616** 41.53/41.05	**.506** 12.85	**.432/.413** 10.97/10.49	445007-1[1] 5-445007-1[2]
37 (4)	**2.172** 55.17	**.324** 8.23	**2.500** 63.5	**2.740** 69.60	**2.282/2.263** 57.96/57.48	**.506** 12.85	**.432/.413** 10.97/10.49	445008-1[1] 5-445008-1[2]
50 (5)	**2.082** 52.88	**.444** 11.28	**2.406** 61.11	**2.646** 67.21	**2.188/2.167** 55.58/55.04	**.617** 15.67	**.544/.525** 13.82/13.34	445009-1[1] 5-445009-1[2]

[1] See Material and Finish above.
[2] See Material and Finish for RoHS compliant Part Numbers above.
Note: See page 5-182 for Blindmate coax/signal combinations.

AMPLIMITE Connectors, Series 109 (Continued)

Straight PCB, Series 109, Standard Density Connectors (MIL Qualified)

Material and Finish

Shell — Steel, cadmium plated
Insert — Approved material per MIL-DTL-24308
Contact — Copper alloy plated gold over nickel underplate*
Spacer — Aluminum alloy, Iridite finish

Related Product Data

Cavity Identification — page 8-39
Mounting, Mating Specifications — page 8-90
Accessories — pages 8-95 to 8-97
PCB Layouts — See page 7-91 or TE Connectivity customer drawing.
***Socket Body** — .000050 [0.00127] min. gold over .000050 [0.00127] min. nickel
Mating Area — .000050 [0.00127] min. gold over .000050 [0.00127] min. nickel
Plug Body — .000050 [0.00127] min. gold over .000050 [0.00127] min. nickel

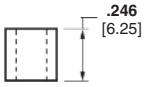

Spacer

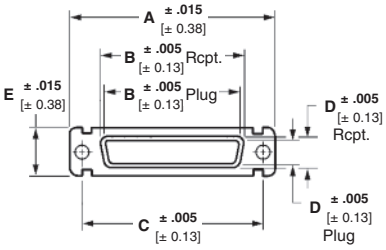

Standard Shell

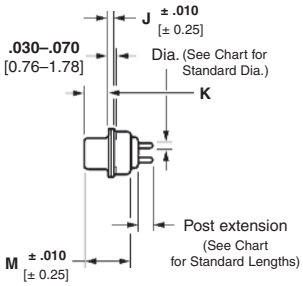

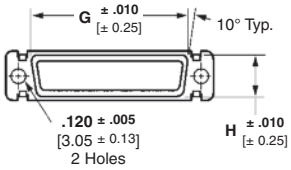

MS Shell Size	Connector Style	Dimensions									
		A	B	C	D	E	G	H	J	K	M
1	Plug	**1.213** 30.81	**.666** 16.92	**.984** 24.99	**.329** 8.36	**.494** 12.55	**.759** 19.28	**.422** 10.72	**.030** 0.76	**.238/.229** 6.04/5.81	**.422** 10.72
	Receptacle	**1.213** 30.81	**.643** 16.33	**.984** 24.99	**.311** 7.90	**.494** 12.55	**.759** 19.28	**.422** 10.72	**.030** 0.76	**.248/.238** 6.29/6.04	**.429** 10.90
2	Plug	**1.541** 39.14	**.994** 25.25	**1.312** 33.32	**.329** 8.36	**.494** 12.55	**1.083** 27.51	**.422** 10.72	**.030** 0.76	**.238/.229** 6.04/5.81	**.422** 10.72
	Receptacle	**1.541** 39.14	**.971** 24.66	**1.312** 33.32	**.311** 7.90	**.494** 12.55	**1.083** 27.51	**.422** 10.72	**.030** 0.76	**.248/.238** 6.29/6.04	**.429** 10.90
3	Plug	**2.088** 53.04	**1.534** 38.96	**1.852** 47.04	**.329** 8.36	**.494** 12.55	**1.625** 41.28	**.422** 10.72	**.039** 0.99	**.236/.224** 5.99/5.68	**.426** 10.82
	Receptacle	**2.088** 53.04	**1.511** 38.38	**1.852** 47.04	**.311** 7.90	**.494** 12.55	**1.625** 41.28	**.422** 10.72	**.030** 0.76	**.248/.238** 6.29/6.04	**.429** 10.90
4	Plug	**2.729** 69.32	**2.182** 55.42	**2.500** 63.5	**.329** 8.36	**.494** 12.55	**2.272** 57.71	**.422** 10.72	**.039** 0.99	**.236/.224** 5.99/5.68	**.426** 10.82
	Receptacle	**2.729** 69.32	**2.159** 54.84	**2.500** 63.5	**.311** 7.90	**.494** 12.55	**2.272** 57.71	**.422** 10.72	**.030** 0.76	**.248/.238** 6.29/6.04	**.429** 10.90
5	Plug	**2.635** 66.93	**2.079** 52.81	**2.406** 61.11	**.441** 11.20	**.605** 15.37	**2.178** 55.32	**.534** 13.56	**.039** 0.99	**.236/.224** 5.99/5.68	**.426** 10.82
	Receptacle	**2.635** 66.93	**2.064** 52.43	**2.406** 61.11	**.423** 10.74	**.605** 15.37	**2.178** 55.32	**.534** 13.55	**.030** 0.76	**.248/.238** 6.29/6.04	**.429** 10.90

Receptacle Assemblies

Shell Size	No. Pos.	Post Dia.	Post Ext. ± .020 [± 0.51]	Zinc Plated Shells: Military Part No. M24308/	Zinc Plated Shells: Part No.	Cadmium Plated Shells: Military Part No. M24308/	Cadmium Plated Shells: Part No.
1	9	**.030** 0.76	**.156** 3.96	23-1	1757828-1	23-1F	443975-1
2	15	**.030** 0.76	**.156** 3.96	23-2	1757828-2	23-2F	443975-2
3	25	**.030** 0.76	**.156** 3.96	23-3	1757828-3	23-3F	443975-3
4	37	**.030** 0.76	**.156** 3.96	23-4	1757828-4	23-4F	443975-4
5	50	**.030** 0.76	**.156** 3.96	23-5	1757828-5	23-5F	443975-5
1	9	**.030** 0.76	**.188** 4.78	23-7	1757830-1	23-7F	443976-1
2	15	**.030** 0.76	**.188** 4.78	23-8	1757830-2	23-8F	443976-2
3	25	**.030** 0.76	**.188** 4.78	23-9	1757830-3	23-9F	443976-3
4	37	**.030** 0.76	**.188** 4.78	23-10	1757830-4	23-10F	443976-4
5	50	**.030** 0.76	**.188** 4.78	23-11	1757830-5	23-11F	443976-5
1	9	**.040** 1.02	**.156** 3.96	23-13	1757832-1	23-13F	443977-1
2	15	**.040** 1.02	**.156** 3.96	23-14	1757832-2	23-14F	443977-2
3	25	**.040** 1.02	**.156** 3.96	23-15	1757832-3	23-15F	443977-3
4	37	**.040** 1.02	**.156** 3.96	23-16	1757832-4	23-16F	443977-4
5	50	**.040** 1.02	**.156** 3.96	23-17	1757832-5	23-17F	443977-5
1	9	**.040** 1.02	**.188** 4.78	23-19	1757834-1	23-19F	443978-1
2	15	**.040** 1.02	**.188** 4.78	23-20	1757834-2	23-20F	443978-2
3	25	**.040** 1.02	**.188** 4.78	23-21	1757834-3	23-21F	443978-3
4	37	**.040** 1.02	**.188** 4.78	23-22	1757834-4	23-22F	443978-4
5	50	**.040** 1.02	**.188** 4.78	23-23	1757834-5	23-23F	443978-5

Plug Assemblies

Shell Size	No. Pos.	Post Dia.	Post Ext. ± .020 [± 0.51]	Zinc Plated Shells: Military Part No. M24308/	Zinc Plated Shells: Part No.	Cadmium Plated Shells: Military Part No. M24308/	Cadmium Plated Shells: Part No.
1	9	**.030** 0.76	**.156** 3.96	24-1	1757827-1	24-1F	1218124-1
2	15	**.030** 0.76	**.156** 3.96	24-2	1757827-2	24-2F	1218124-2
3	25	**.030** 0.76	**.156** 3.96	24-3	1757827-3	24-3F	1218124-3
4	37	**.030** 0.76	**.156** 3.96	24-4	1757827-4	24-4F	1218124-4
5	50	**.030** 0.76	**.156** 3.96	24-5	1757827-5	24-5F	1218124-5
1	9	**.030** 0.76	**.188** 4.78	24-7	1757829-1	24-7F	1218125-1
2	15	**.030** 0.76	**.188** 4.78	24-8	1757829-2	24-8F	1218125-2
3	25	**.030** 0.76	**.188** 4.78	24-9	1757829-3	24-9F	1218125-3
4	37	**.030** 0.76	**.188** 4.78	24-10	1757829-4	24-10F	1218125-4
5	50	**030** 0.76	**.188** 4.78	24-11	1757829-5	24-11F	1218125-5
1	9	**.040** 1.02	**.156** 3.96	24-13	1757831-1	24-13F	1218126-1
2	15	**.040** 1.02	**.156** 3.96	24-14	1757831-2	24-14F	1218126-2
3	25	**.040** 1.02	**.156** 3.96	24-15	1757831-3	24-15F	1218126-3
4	37	**.040** 1.02	**.156** 3.96	24-16	1757831-4	24-16F	1218126-4
5	50	**.040** 1.02	**.156** 3.96	24-17	1757831-5	24-17F	1218126-5
1	9	**.040** 1.02	**.188** 4.78	24-19	1757833-1	24-19F	1218127-1
2	15	**.040** 1.02	**.188** 4.78	24-20	1757833-2	24-20F	1218127-2
3	25	**040** 1.02	**.188** 4.78	24-21	1757833-3	24-21F	1218127-3
4	37	**.040** 1.02	**.188** 4.78	24-22	1757833-4	24-22F	1218127-4
5	50	**.040** 1.02	**.188** 4.78	24-23	1757833-5	24-23F	1218127-5

Dimensions are shown for reference purposes only. Specifications subject to change.

Dimensions are in millimeters unless otherwise specified.

USA: +1 800 522 6752
Asia Pacific: +86 0 400 820 6015
UK: +44 800 267 666

For additional support numbers please visit www.te.com

AMPLIMITE Connectors, Series 109 (Continued)

Straight PCB, Series 109, Standard Density Connectors (Industrial Grade)

Material and Finish

Shell — Steel, cadmium or zinc plated

Insert — Approved material per MIL-DTL-24308

Contact — Copper alloy plated gold over nickel underplate*

Spacer — Aluminum alloy, Iridite finish

Related Product Data

Cavity Identification — page 8-39

Mounting, Mating Specifications — page 8-90

Accessories — pages 8-95 to 8-97

PCB Layouts — See page 8-91 or TE Connectivity customer drawing.

*[a]**Socket Body and Mating Area** — .000050 [0.00127] min. gold over .000050 [0.00127] min. nickel

Plug Body and Mating Area — .000050 [0.00127] min. gold over .000050 [0.00127] min. nickel

[b]**Mating Area** — Copper alloy with .000030 [0.00076] min. gold plate over .000050 [0.00127] min. nickel underplate

Product Specification — 108-1770

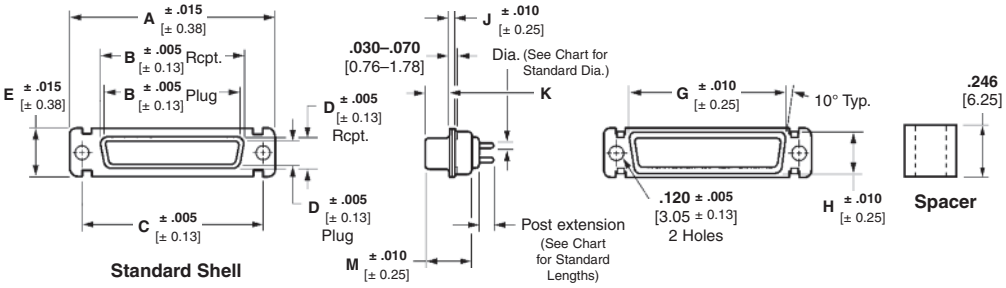

MS Shell Size	Connector Style	Dimensions									
		A	B	C	D	E	G	H	J	K	M
1	Plug	**1.213** 30.81	**.666** 16.92	**.984** 24.99	**.329** 8.36	**.494** 12.55	**.759** 19.28	**.422** 10.72	**.030** 0.76	**.238/.229** 6.04/5.81	**.422** 10.72
	Receptacle	**1.213** 30.81	**.643** 16.33	**.984** 24.99	**.311** 7.90	**.494** 12.55	**.759** 19.28	**.422** 10.72	**.030** 0.76	**.248/.238** 6.29/6.04	**.429** 10.90
2	Plug	**1.541** 39.14	**.994** 25.25	**1.312** 33.32	**.329** 8.36	**.494** 12.55	**1.083** 27.51	**.422** 10.72	**.030** 0.76	**.238/.229** 6.04/5.81	**.422** 10.72
	Receptacle	**1.541** 39.14	**.971** 24.66	**1.312** 33.32	**.311** 7.90	**.494** 12.55	**1.083** 27.51	**.422** 10.72	**.030** 0.76	**.248/.238** 6.29/6.04	**.429** 10.90
3	Plug	**2.088** 53.04	**1.534** 38.96	**1.852** 47.04	**.329** 8.36	**.494** 12.55	**1.625** 41.28	**.422** 10.72	**.039** 0.99	**.236/.224** 5.99/5.68	**.426** 10.82
	Receptacle	**2.088** 53.04	**1.511** 38.38	**1.852** 47.04	**.311** 7.90	**.494** 12.55	**1.625** 41.28	**.422** 10.72	**.030** 0.76	**.248/.238** 6.29/6.04	**.429** 10.90
4	Plug	**2.729** 69.32	**2.182** 55.42	**2.500** 63.5	**.329** 8.36	**.494** 12.55	**2.272** 57.71	**.422** 10.72	**.039** 0.99	**.236/.224** 5.99/5.68	**.426** 10.82
	Receptacle	**2.729** 69.32	**2.159** 54.84	**2.500** 63.5	**.311** 7.90	**.494** 12.55	**2.272** 57.71	**.422** 10.72	**.030** 0.76	**.248/.238** 6.29/6.04	**.429** 10.90
5	Plug	**2.635** 66.93	**2.079** 52.81	**2.406** 61.11	**.441** 11.20	**.605** 15.37	**2.178** 55.32	**.534** 13.56	**.039** 0.99	**.236/.224** 5.99/5.68	**.426** 10.82
	Receptacle	**2.635** 66.93	**2.064** 52.43	**2.406** 61.11	**.423** 10.74	**.605** 15.37	**2.178** 55.32	**.534** 13.55	**.030** 0.76	**.248/.238** 6.29/6.04	**.429** 10.90

Dimensions are shown for reference purposes only. Specifications subject to change.

Dimensions are in millimeters unless otherwise specified.

USA: +1 800 522 6752
Asia Pacific: +86 0 400 820 6015
UK: +44 800 267 666

For additional support numbers please visit www.te.com

AMPLIMITE Connectors, Series 109 (Continued)

Straight PCB, Series 109, Standard Density Connectors (Industrial Grade) (Continued)

Material and Finish

Shell — Steel, see below

[1] **Tin Plated RoHS Compliant Finish** — Tin .000400–.000550 [0.01020–0.01400] thick over copper .000050 [0.00127] min. thick

[2] **Zinc Plated RoHS Compliant Finish** — Zinc .000200–.000400 [0.00508–0.01016] thick, yellow trivalent chromate

Insert — Approved material per MIL-DTL-24308

Contact — Copper alloy plated gold over nickel underplate*

Spacer — Aluminum alloy, Iridite finish

Related Product Data

Cavity Identification — page 8-39

Mounting, Mating Specifications — page 8-90

Accessories — pages 8-95 to 8-97

PCB Layouts — See page 8-91 or TE Connectivity customer drawing.

*[a]**Socket Body and Mating Area** — .000050 [0.00127] min. gold over .000050 [0.00127] min. nickel

Plug Body and Mating Area — .000050 [0.00127] min. gold over .000050 [0.00127] min. nickel

[b]**Mating Area** — Copper alloy with .000030 [0.00076] min. gold plate over .000050 [0.00127] min. nickel underplate

Product Specification — 108-1770

Shell Size	No. Pos.	Post Dia.	Post Ext. ± .020 [± 0.51]	Receptacle Part Number		
				Tin Plated Shells[a]	Tin Plated Shells[b]	Zinc Plated RoHS Shells[a,2]
1	9	.030 0.76	.156 3.96	1218826-1[1]	1218293-1[1]	1218289-1
2	15	.030 0.76	.156 3.96	1218826-2[1]	1218293-2[1]	1218289-2
3	25	.030 0.76	.156 3.96	1218826-3[1]	1218293-3[1]	1218289-3
4	37	.030 0.76	.156 3.96	1218826-4[1]	1218293-4[1]	1218289-4
5	50	.030 0.76	.156 3.96	1218826-5[1]	1218293-5[1]	1218289-5
1	9	.030 0.76	.188 4.78	1218827-1[1]	1218294-1[1]	1218290-1
2	15	.030 0.76	.188 4.78	1218827-2[1]	1218294-2[1]	1218290-2
3	25	.030 0.76	.188 4.78	1218827-3[1]	1218294-3[1]	1218290-3
4	37	.030 0.76	.188 4.78	1218827-4[1]	1218294-4[1]	1218290-4
5	50	.030 0.76	.188 4.78	1218827-5[1]	1218294-5[1]	1218290-5
1	9	.040 1.02	.156 3.96	—	—	1218291-1
2	15	.040 1.02	.156 3.96	—	—	1218291-2
3	25	.040 1.02	.156 3.96	—	—	1218291-3
4	37	.040 1.02	.156 3.96	—	—	1218291-4
5	50	.040 1.02	.156 3.96	—	—	1218291-5
1	9	.040 1.02	.188 4.78	1218829-1[1]	—	1218292-1
2	15	.040 1.02	.188 4.78	1218829-2[1]	—	1218292-2
3	25	.040 1.02	.188 4.78	1218829-3[1]	—	1218292-3
4	37	.040 1.02	.188 4.78	1218829-4[1]	—	1218292-4
5	50	.040 1.02	.188 4.78	1218829-5[1]	—	1218292-5

1 See Tin Plated RoHS compliant finish above.
2 See Zinc Plated RoHS compliant finish above.

Shell Size	No. Pos.	Post Dia.	Post Ext. ± .020 [± 0.51]	Plug Part Number	
				Tin Plated Shells[a]	Zinc Plated RoHS Shells[a,2]
1	9	.030 0.76	.156 3.96	1218374-1[1]	1218378-1
2	15	.030 0.76	.156 3.96	1218374-2[1]	1218378-2
3	25	.030 0.76	.156 3.96	1218374-3[1]	1218378-3
4	37	.030 0.76	.156 3.96	1218374-4[1]	1218378-4
5	50	.030 0.76	.156 3.96	1218374-5[1]	1218378-5
1	9	.030 0.76	.188 4.78	1218375-1[1]	1218379-1
2	15	.030 0.76	.188 4.78	1218375-2[1]	1218379-2
3	25	.030 0.76	.188 4.78	1218375-3[1]	1218379-3
4	37	.030 0.76	.188 4.78	1218375-4[1]	1218379-4
5	50	030 0.76	.188 4.78	1218375-5[1]	1218379-5
1	9	.040 1.02	.156 3.96	—	1218380-1
2	15	.040 1.02	.156 3.96	—	1218380-2
3	25	.040 1.02	.156 3.96	—	1218380-3
4	37	.040 1.02	.156 3.96	—	1218380-4
5	50	.040 1.02	.156 3.96	—	1218380-5
1	9	.040 1.02	.188 4.78	1218377-1[1]	1218381-1
2	15	.040 1.02	.188 4.78	1218377-2[1]	1218381-2
3	25	040 1.02	.188 4.78	1218377-3[1]	1218381-3
4	37	.040 1.02	.188 4.78	1218377-4[1]	1218381-4
5	50	.040 1.02	.188 4.78	1218377-5[1]	1218381-5

2 See Tin Plated RoHS compliant finish above.
3 See Zinc Plated RoHS compliant finish above.

Dimensions are shown for reference purposes only. Specifications subject to change.

Dimensions are in millimeters unless otherwise specified.

USA: +1 800 522 6752
Asia Pacific: +86 0 400 820 6015
UK: +44 800 267 666

For additional support numbers please visit www.te.com

AMPLIMITE Connectors, Series 109 (Continued)

Straight PCB, Series 109, Make First/Break Last Sub-D Connectors (Industrial Grade)

Material and Finish

Shell — Steel, cadmium or tin plated

Insert — Polyester per MIL-M-24519

Contact — Copper alloy with .000030 [0.00076] min. gold plate over .000050 [0.00127] min. nickel underplate

[3] **Regular Length Contact Location:** 1, 6, and 9

[4] **Short Length Contact Location:** 2 thru 5, 7, and 8

[5] **Finish** — Cadmium per QQ-P-416

[6] **Finish** — Tin plated per MIL-T-10727

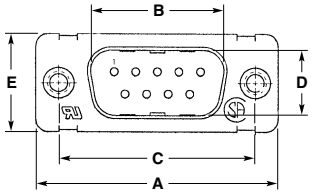

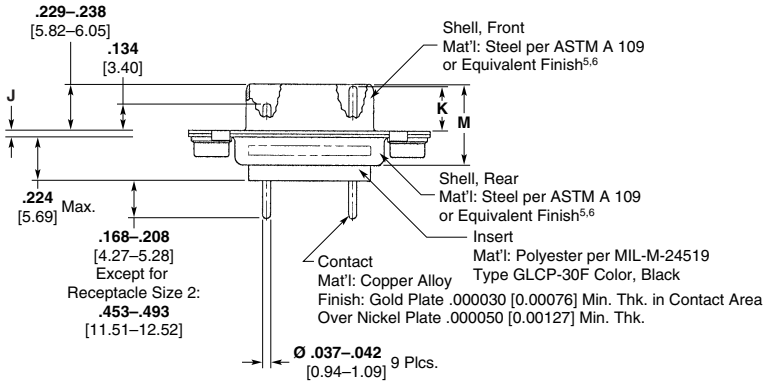

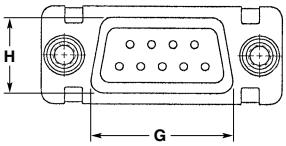

MS Shell Size	Connector Style	Dimensions									
		A	B	C	D	E	G	H	J	K	M
1	Plug	**1.213** 30.81	**.666** 16.92	**.984** 24.99	**.329** 8.36	**.494** 12.55	**.759** 19.28	**.422** 10.72	**.020/.040** 0.51/1.02	**.223** 5.66	**.412/.432** 10.46/10.97
	Receptacle	**1.213** 30.81	**.643** 16.33	**.984** 24.99	**.311** 7.90	**.494** 12.55	**.759** 19.28	**.422** 10.72	**.238/.248** 6.05/6.30	**.178** 4.52	**.419/.439** 10.64/11.15
2	Receptacle	**1.541** 39.14	**.971** 24.66	**1.312** 33.32	**.311** 7.90	**.494** 12.55	**1.083** 27.51	**.422** 10.72	**.238/.248** 6.05/6.30	**.178** 4.52	**.419/.439** 10.64/11.15
3	Plug	**2.088** 53.04	**1.534** 38.96	**1.852** 47.04	**.329** 8.36	**.494** 12.55	**1.625** 41.28	**.422** 10.72	**.029/.049** 0.74/1.24	**.217** 5.51	**.416/.435** 10.57/11.07

Plug Assemblies

Shell Size	No. Pos.	Post Dia.	Plug Part Number	
			Tin Plated Shells	Cadmium Plated Shells
1	9	**.037/.043** 0.94/1.09	443638-2	443638-1
3	25	**.037/.043** 0.94/1.09	443631-2	443631-1

Receptacle Assemblies

Shell Size	No. Pos.	Post Dia.	Plug Part Number	
			Tin Plated Shells	Cadmium Plated Shells
1	9	**.037/.043** 0.94/1.09	443637-2	443637-1
2	15	**.037/.043** 0.94/1.09	443646-2	443646-1

Dimensions are shown for reference purposes only. Specifications subject to change.

Dimensions are in millimeters unless otherwise specified.

USA: +1 800 522 6752
Asia Pacific: +86 0 400 820 6015
UK: +44 800 267 666

For additional support numbers please visit www.te.com

AMPLIMITE Connectors, Series 109 (Continued)

Right-Angle, PCB Plugs, Series 109, Standard Density Connectors (MIL Qualified)

Material and Finish

Shell — Steel, cadmium plated

Insert and Post Spacer — Approved material per MIL-DTL-24308

Contact — Copper alloy with .000050 [0.00127] min. gold plate over .000050 [0.00127] min. nickel underplate

Related Product Data

Cavity Identification — page 8-39

Mounting, Mating Specifications — page 8-90

Accessories — pages 8-95 to 8-97

PCB Layouts — See page 8-91 or TE Connectivity customer drawing.

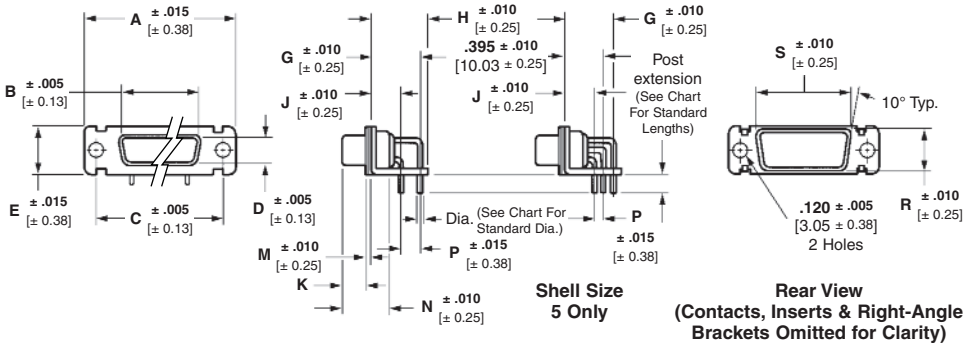

Shell Size 5 Only

Rear View (Contacts, Inserts & Right-Angle Brackets Omitted for Clarity)

MS Shell Size	Connector Style	Dimensions													
		A	B	C	D	E	G	H	J	K	M	N	P	R	S
1	Plug	**1.213** 30.81	**.666** 16.92	**.984** 24.99	**.329** 8.36	**.494** 12.55	**.395** 10.03	**.484** 12.29	**.283** 7.19	**.238/.229** 6.04/5.81	**.030** 0.76	**.422** 10.72	**.112** 2.84	**.422** 10.72	**.759** 19.28
2	Plug	**1.541** 39.14	**.994** 25.25	**1.312** 33.33	**.329** 8.36	**.494** 12.55	**.395** 10.03	**.484** 12.29	**.283** 7.19	**.238/.229** 6.04/5.81	**.030** 0.76	**.422** 10.72	**.112** 2.84	**.422** 10.72	**1.083** 27.51
3	Plug	**2.088** 53.04	**1.534** 38.96	**1.852** 47.04	**.329** 8.36	**.494** 12.55	**.395** 10.03	**.484** 12.29	**.283** 7.19	**.236/.224** 5.99/5.68	**.039** 0.99	**.426** 10.82	**.112** 2.84	**.422** 10.72	**1.625** 29.59
4	Plug	**2.729** 69.32	**2.182** 55.42	**2.500** 63.5	**.329** 8.36	**.494** 12.55	**.395** 10.03	**.484** 12.29	**.283** 7.19	**.236/.224** 5.99/5.68	**.039** 0.99	**.426** 10.82	**.112** 2.84	**.422** 10.72	**2.272** 57.71
5	Plug	**2.635** 66.93	**2.079** 52.81	**2.406** 61.11	**.441** 10.44	**.605** 15.37	**.507** 12.88	**.594** 15.09	**.283** 7.19	**.236/.224** 5.99/5.68	**.039** 0.99	**.426** 10.82	**.112** 2.84	**.534** 13.56	**2.178** 55.32

Plug Assemblies — .030 [0.76] Post Dia.

Shell Size	No. Pos.	Post Ext. ± .020 [± 0.51]	Zinc Plated Shells: Military Part No. M24308/	Zinc Plated Shells: Part No.	Cadmium Plated Shells: Military Part No. M24308/	Cadmium Plated Shells: Part No.
1	9	**.125** 3.18	24-25	1757835-1	24-25F	1218440-1
2	15	**.125** 3.18	24-26	1757835-2	24-26F	1218440-2
3	25	**.125** 3.18	24-27	1757835-3	24-27F	1218440-3
4	37	**.125** 3.18	24-28	1757835-4	24-28F	1218440-4
5	50	**.125** 3.18	24-29	1757835-5	24-29F	1218440-5
1	9	**.156** 3.96	24-31	1757837-1	24-31F	1218441-1
2	15	**.156** 3.96	24-32	1757837-2	24-32F	1218441-2
3	25	**.156** 3.96	24-33	1757837-3	24-33F	1218441-3
4	37	**.156** 3.96	24-34	1757837-4	24-34F	1218441-4
5	50	**.156** 3.96	24-35	1757837-5	24-35F	1218441-5
1	9	**.188** 4.78	24-49	1757839-1	24-49F	1218444-1
2	15	**.188** 4.78	24-50	1757839-2	24-50F	1218444-2
3	25	**.188** 4.78	24-51	1757839-3	24-51F	1218444-3
4	37	**.188** 4.78	24-52	1757839-4	24-52F	1218444-4
5	50	**.188** 4.78	24-53	1757839-5	24-53F	1218444-5

Plug Assemblies — .040 [1.02] Post Dia.

Shell Size	No. Pos.	Post Ext. ± .020 [± 0.51]	Zinc Plated Shells: Military Part No. M24308/	Zinc Plated Shells: Part No.	Cadmium Plated Shells: Military Part No. M24308/	Cadmium Plated Shells: Part No.
1	9	**.125** 3.18	24-37	1757841-1	24-37F	1218442-1
2	15	**.125** 3.18	24-38	1757841-2	24-38F	1218442-2
3	25	**.125** 3.18	24-39	1757841-3	24-39F	1218442-3
4	37	**.125** 3.18	24-40	1757841-4	24-40F	1218442-4
5	50	**.125** 3.18	24-41	1757841-5	24-41F	1218442-5
1	9	**.156** 3.96	24-43	1757843-1	—	—
2	15	**.156** 3.96	24-44	1757843-2	—	—
3	25	**.156** 3.96	24-45	1757843-3	—	—
4	37	**.156** 3.96	24-46	1757843-4	—	—
5	50	**.156** 3.96	24-47	1757843-5	—	—
1	9	**.188** 4.78	24-55	1757845-1	24-55F	1218445-1
2	15	**.188** 4.78	24-56	1757845-2	24-56F	1218445-2
3	25	**.188** 4.78	24-57	1757845-3	24-57F	1218445-3
4	37	**.188** 4.78	24-58	1757845-4	24-58F	1218445-4
5	50	**.188** 4.78	24-59	1757845-5	24-59F	1218445-5

Note: The suffix "F" on M24308 part numbers designates cadmium shell plating.

Dimensions are shown for reference purposes only. Specifications subject to change.

Dimensions are in millimeters unless otherwise specified.

USA: +1 800 522 6752
Asia Pacific: +86 0 400 820 6015
UK: +44 800 267 666

For additional support numbers please visit www.te.com

AMPLIMITE Connectors, Series 109 (Continued)

Right-Angle, PCB Receptacles, Series 109, Standard Density Connectors (MIL Qualified)

Material and Finish

Shell — Steel, cadmium or zinc plated

Insert and Post Spacer — Approved material per MIL-DTL-24308

Contacts —

Socket Body — Copper alloy with .000050 [0.00127] min. gold plate over .000050 [0.00127] min. nickel underplate

Mating Area — Copper alloy with .000050 [0.00127] min. gold plate over .000050 [0.00127] min. nickel underplate

Related Product Data

Cavity Identification — page 8-39

Mounting, Mating Specifications — page 8-90

Accessories — pages 8-95 to 8-97

PCB Layouts — See page 8-91 or TE Connectivity customer drawing.

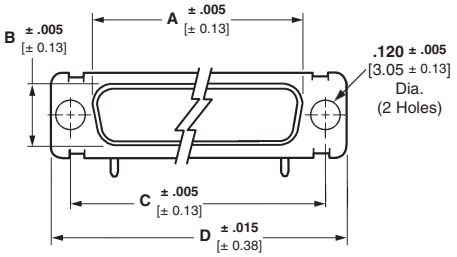

9, 15, 25 and 37 Positions

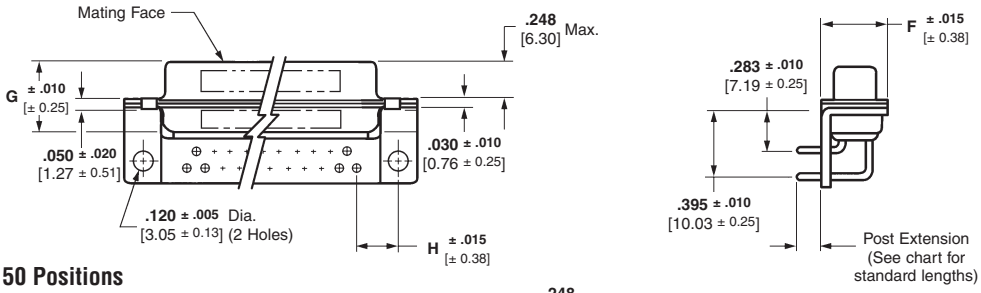

50 Positions

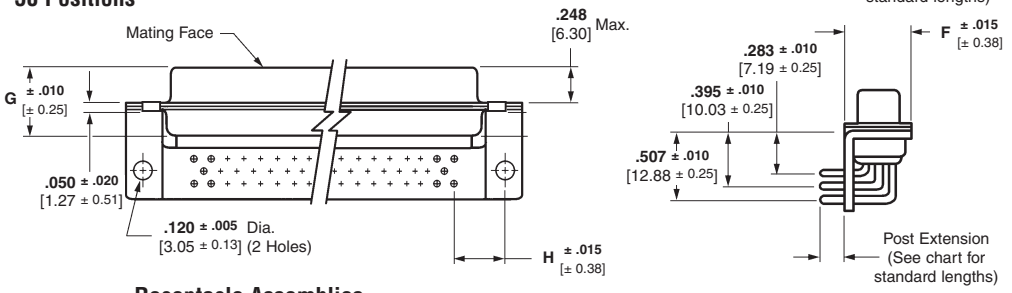

Receptacle Assemblies

No. of Contact Pos. (Shell Size)	Dimensions						
	A (Outside)	B (Outside)	C	D	F	G	H
9 (1)	**.643** 16.33	**.311** 7.9	**.984** 24.99	**1.213** 30.81	**.494** 12.55	**.429** 10.97	**.276** 7.01
15 (2)	**.971** 24.66	**.311** 7.9	**1.312** 33.32	**1.541** 39.14	**.494** 12.55	**.429** 10.97	**.278** 7.06
25 (3)	**1.511** 38.38	**.311** 7.9	**1.852** 47.04	**2.088** 53.04	**.494** 12.55	**.429** 10.97	**.274** 6.96
37 (4)	**2.159** 54.84	**.311** 7.9	**2.500** 63.5	**2.729** 69.32	**.494** 12.55	**.429** 10.97	**.272** 6.91
50 (5)	**2.064** 52.43	**.423** 10.74	**2.406** 61.11	**2.635** 66.93	**.605** 15.37	**.429** 10.97	**.333** 8.46

Receptacle Assemblies — .030 [0.76] Post Dia.

Shell Size	No. Pos.	Post Ext. ± .020 [± 0.51]	Zinc Plated Shells: Military Part No. M24308/	Zinc Plated Shells: Part No.	Cadmium Plated Shells: Military Part No. M24308/	Cadmium Plated Shells: Part No.
1	9	**.125** 3.18	23-25	1757836-1	23-25F	1218434-1
2	15	**.125** 3.18	23-26	1757836-2	23-26F	1218434-2
3	25	**.125** 3.18	23-27	1757836-3	23-27F	1218434-3
4	37	**.125** 3.18	23-28	1757836-4	23-28F	1218434-4
5	50	**.125** 3.18	23-29	1757836-5	23-29F	1218434-5
1	9	**.156** 3.96	23-31	1757838-1	23-31F	1218408-1
2	15	**.156** 3.96	23-32	1757838-2	23-32F	1218408-2
3	25	**.156** 3.96	23-33	1757838-3	23-33F	1218408-3
4	37	**.156** 3.96	23-34	1757838-4	23-34F	1218408-4
5	50	**.156** 3.96	23-35	1757838-5	23-35F	1218408-5
1	9	**.188** 4.78	23-49	1757840-1	23-49F	1218437-1
2	15	**.188** 4.78	23-50	1757840-2	23-50F	1218437-2
3	25	**.188** 4.78	23-51	1757840-3	23-51F	1218437-3
4	37	**.188** 4.78	23-52	1757840-4	23-52F	1218437-4
5	50	**.188** 4.78	23-53	1757840-5	23-53F	1218437-5

Receptacle Assemblies — .040 [1.02] Post Dia.

Shell Size	No. Pos.	Post Ext. ± .020 [± 0.51]	Zinc Plated Shells: Military Part No. M24308/	Zinc Plated Shells: Part No.	Cadmium Plated Shells: Military Part No. M24308/	Cadmium Plated Shells: Part No.
1	9	**.125** 3.18	23-37	1757842-1	23-37F	1218435-1
2	15	**.125** 3.18	23-38	1757842-2	23-38F	1218435-2
3	25	**.125** 3.18	23-39	1757842-3	23-39F	1218435-3
4	37	**.125** 3.18	23-40	1757842-4	23-40F	1218435-4
5	50	**.125** 3.18	23-41	1757842-5	23-41F	1218435-5
1	9	**.156** 3.96	23-43	1757844-1	23-43F	1218436-1
2	15	**.156** 3.96	23-44	1757844-2	23-44F	1218436-2
3	25	**.156** 3.96	23-45	1757844-3	23-45F	1218436-3
4	37	**.156** 3.96	23-46	1757844-4	23-46F	1218436-4
5	50	**.156** 3.96	23-47	1757844-5	23-47F	1218436-5
1	9	**.188** 4.78	23-55	1757846-1	23-55F	1218438-1
2	15	**.188** 4.78	23-56	1757846-2	23-56F	1218438-2
3	25	**.188** 4.78	23-57	1757846-3	23-57F	1218438-3
4	37	**.188** 4.78	23-58	1757846-4	23-58F	1218438-4
5	50	**.188** 4.78	23-59	1757846-5	23-59F	1218438-5

Note: The suffix "F" on M24308 part numbers designates cadmium shell plating.

Dimensions are shown for reference purposes only. Specifications subject to change.

Dimensions are in millimeters unless otherwise specified.

USA: +1 800 522 6752
Asia Pacific: +86 0 400 820 6015
UK: +44 800 267 666

For additional support numbers please visit www.te.com

AMPLIMITE Connectors, Series 109 (Continued)

Right-Angle, PCB Plugs, Series 109, Standard Density Connectors (Industrial Grade)

Material and Finish

Shell — Steel, see below

[1] Tin Plated RoHS Compliant Finish — Tin .000400–.000550 [0.01020–0.01400] thick over copper .000050 [0.00127] min. thick

[2] Zinc Plated RoHS Compliant Finish — Zinc .000200–.000400 [0.00508–0.01016] thick, yellow trivalent chromate

Insert and Post Spacer — Approved material per MIL-DTL-24308

Contact — Copper alloy with .000050 [0.00127] min. gold plate over .000050 [0.00127] min. nickel underplate

Related Product Data

Cavity Identification — page 8-39

Mounting, Mating Specifications — page 8-90

Accessories — pages 8-95 to 8-97

PCB Layouts — See page 8-91 or TE Connectivity customer drawing.

Product Specification — 108-1770

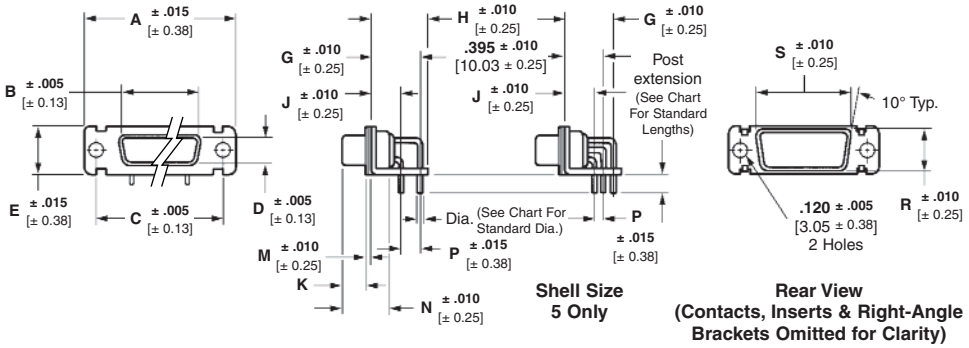

Shell Size 5 Only

Rear View (Contacts, Inserts & Right-Angle Brackets Omitted for Clarity)

MS Shell Size	Connector Style	Dimensions													
		A	B	C	D	E	G	H	J	K	M	N	P	R	S
1	Plug	**1.213** 30.81	**.666** 16.92	**.984** 24.99	**.329** 8.36	**.494** 12.55	**.395** 10.03	**.484** 12.29	**.283** 7.19	**.238/.229** 6.04/5.81	**.030** 0.76	**.422** 10.72	**.112** 2.84	**.422** 10.72	**.759** 19.28
2	Plug	**1.541** 39.14	**.994** 25.25	**1.312** 33.33	**.329** 8.36	**.494** 12.55	**.395** 10.03	**.484** 12.29	**.283** 7.19	**.238/.229** 6.04/5.81	**.030** 0.76	**.422** 10.72	**.112** 2.84	**.422** 10.72	**1.083** 27.51
3	Plug	**2.088** 53.04	**1.534** 38.96	**1.852** 47.04	**.329** 8.36	**.494** 12.55	**.395** 10.03	**.484** 12.29	**.283** 7.19	**.236/.224** 5.99/5.68	**.039** 0.99	**.426** 10.82	**.112** 2.84	**.422** 10.72	**1.625** 29.59
4	Plug	**2.729** 69.32	**2.182** 55.42	**2.500** 63.5	**.329** 8.36	**.494** 12.55	**.395** 10.03	**.484** 12.29	**.283** 7.19	**.236/.224** 5.99/5.68	**.039** 0.99	**.426** 10.82	**.112** 2.84	**.422** 10.72	**2.272** 57.71
5	Plug	**2.635** 66.93	**2.079** 52.81	**2.406** 61.11	**.441** 10.44	**.605** 15.37	**.507** 12.88	**.594** 15.09	**.283** 7.19	**.236/.224** 5.99/5.68	**.039** 0.99	**.426** 10.82	**.112** 2.84	**.534** 13.56	**2.178** 55.32

Plug Assemblies — .030 [0.76] Post Dia.

Shell Size	No. Pos.	Post Ext. ± .020 [± 0.51]	Part Number: Tin Plated Shells[1]	Part Number: Zinc Plated RoHS Shells[2]
1	9	**.125** 3.18	1218830-1	1218831-1
2	15	**.125** 3.18	1218830-2	1218831-2
3	25	**.125** 3.18	1218830-3	1218831-3
4	37	**.125** 3.18	1218830-4	1218831-4
5	50	**.125** 3.18	1218830-5	1218831-5
1	9	**.156** 3.96	1218832-1	1218833-1
2	15	**.156** 3.96	1218832-2	1218833-2
3	25	**.156** 3.96	1218832-3	1218833-3
4	37	**.156** 3.96	1218832-4	1218833-4
5	50	**.156** 3.96	1218832-5	1218833-5
1	9	**.188** 4.78	1218838-1	1218839-1
2	15	**.188** 4.78	1218838-2	1218839-2
3	25	**.188** 4.78	1218838-3	1218839-3
4	37	**.188** 4.78	1218838-4	1218839-4
5	50	**.188** 4.78	1218838-5	1218839-5

3 See Zinc Plated RoHS compliant finish above.

Plug Assemblies — .040 [1.02] Post Dia.

Shell Size	No. Pos.	Post Ext. ± .020 [± 0.51]	Part Number: Tin Plated Shells[1]	Part Number: Zinc Plated RoHS Shells[2]
1	9	**.125** 3.18	1218834-1	1218835-1
2	15	**.125** 3.18	1218834-2	1218835-2
3	25	**.125** 3.18	1218834-3	1218835-3
4	37	**.125** 3.18	1218834-4	1218835-4
5	50	**.125** 3.18	1218834-5	1218835-5
1	9	**.156** 3.96	—	1218837-1
2	15	**.156** 3.96	—	1218837-2
3	25	**.156** 3.96	—	1218837-3
4	37	**.156** 3.96	—	1218837-4
5	50	**.156** 3.96	—	1218837-5
1	9	**.188** 4.78	1218840-1	1218841-1
2	15	**.188** 4.78	1218840-2	1218841-2
3	25	**.188** 4.78	1218840-3	1218841-3
4	37	**.188** 4.78	1218840-4	1218841-4
5	50	**.188** 4.78	1218840-5	1218841-5

2 See Tin Plated RoHS compliant finish above.
3 See Zinc Plated RoHS compliant finish above.

Dimensions are shown for reference purposes only. Specifications subject to change.

Dimensions are in millimeters unless otherwise specified.

USA: +1 800 522 6752
Asia Pacific: +86 0 400 820 6015
UK: +44 800 267 666

For additional support numbers please visit www.te.com

AMPLIMITE Connectors, Series 109 (Continued)

Right-Angle, PCB Receptacles, Series 109, Standard Density Connectors (Industrial Grade)

Material and Finish

Shell — Steel, see below for finish options

Tin Plated RoHS Compliant Finish — Tin .000400–.000550 [0.01020–0.01400] thick over copper .000050 [0.00127] min. thick

Zinc Plated RoHS Compliant — Zinc .000200–.000400 [0.00508–0.01016] thick, yellow trivalent chromate

Insert and Post Spacer — Approved material per MIL-DTL-24308

Contacts —

Socket Body — Copper alloy with .000050 [0.00127] min. gold plate over .000050 [0.00127] min. nickel under-plate

[a]**Mating Area** — Copper alloy with .000050 [0.00127] min. gold plate over .000050 [0.00127] min. nickel under-plate

[b]**Mating Area** — Copper alloy with .000030 [0.00076] min. gold plate over .000050 [0.00127] min. nickel under-plate

Related Product Data

Cavity Identification — page 8-39

Mounting, Mating Specifications — page 8-90

Accessories — pages 8-95 to 8-97

PCB Layouts — See page 8-91 or TE Connectivity customer drawing.

Product Specification — 108-1770

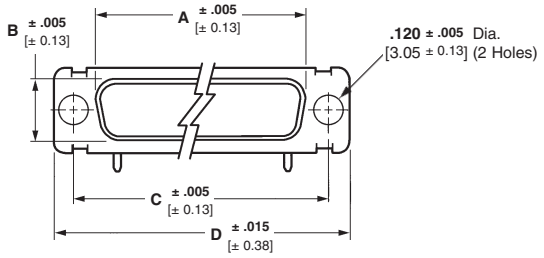

9, 15, 25 and 37 Positions

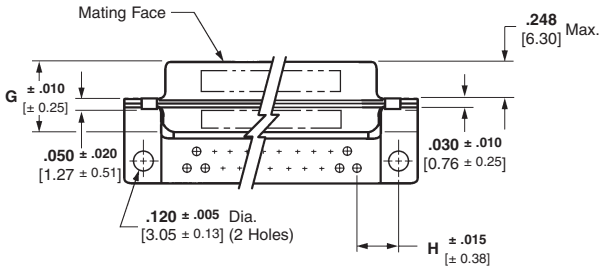

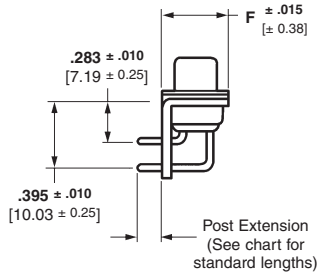

50 Positions

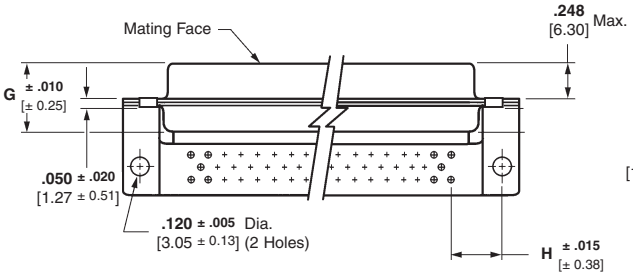

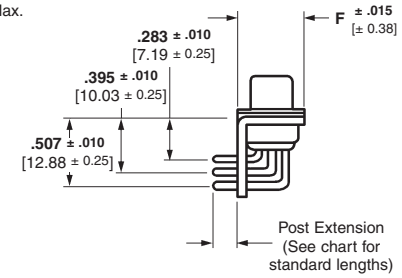

Receptacle Assemblies

No. of Contact Pos. (Shell Size)	Dimensions						
	A (Outside)	B (Outside)	C	D	F	G	H
9 (1)	**.643** 16.33	**.311** 7.9	**.984** 24.99	**1.213** 30.81	**.494** 12.55	**.429** 10.97	**.276** 7.01
15 (2)	**.971** 24.66	**.311** 7.9	**1.312** 33.32	**1.541** 39.14	**.494** 12.55	**.429** 10.97	**.278** 7.06
25 (3)	**1.511** 38.38	**.311** 7.9	**1.852** 47.04	**2.088** 53.04	**.494** 12.55	**.429** 10.97	**.274** 6.96
37 (4)	**2.159** 54.84	**.311** 7.9	**2.500** 63.5	**2.729** 69.32	**.494** 12.55	**.429** 10.97	**.272** 6.91
50 (5)	**2.064** 52.43	**.423** 10.74	**2.406** 61.11	**2.635** 66.93	**.605** 15.37	**.429** 10.97	**.333** 8.46

Dimensions are shown for reference purposes only. Specifications subject to change.

Dimensions are in millimeters unless otherwise specified.

USA: +1 800 522 6752
Asia Pacific: +86 0 400 820 6015
UK: +44 800 267 666

For additional support numbers please visit www.te.com

AMPLIMITE Connectors, Series 109 (Continued)

Right-Angle, PCB Receptacles, Series 109, Standard Density Connectors (Industrial Grade) (Continued)

Material and Finish

Shell — Steel

Insert and Post Spacer — Approved material per MIL-DTL-24308

Contacts —

Socket Body — Copper alloy with .000050 [0.00127] min. gold plate over .000050 [0.00127] min. nickel underplate

[a]**Mating Area** — Copper alloy with .000050 [0.00127] min. gold plate over .000050 [0.00127] min. nickel underplate

[b]**Mating Area** — Copper alloy with .000030 [0.00076] min. gold plate over .000050 [0.00127] min. nickel underplate

Related Product Data

Cavity Identification — page 8-39

Mounting, Mating Specifications — page 8-90

Accessories — pages 8-95 to 8-97

PCB Layouts — See page 8-91 or TE Connectivity customer drawing.

Product Specification — 108-1770

Receptacle Assemblies — .030 [0.76] Post Dia.

Shell Size	No. Pos.	Post Ext. ± .020 [± 0.51]	Part Number		
			Tin Plated Shells[b]	Tin Plated Shells[a]	Zinc Plated Shells[a]
1	9	**.125** 3.18	1218842-1	1218844-1	1218843-1
2	15	**.125** 3.18	1218842-2	1218844-2	1218843-2
3	25	**.125** 3.18	1218842-3	1218844-3	1218843-3
4	37	**.125** 3.18	1218842-4	1218844-4	1218843-4
5	50	**.125** 3.18	1218842-5	1218844-5	1218843-5
1	9	**.156** 3.96	1218845-1	1218847-1	1218846-1
2	15	**.156** 3.96	1218845-2	1218847-2	1218846-2
3	25	**.156** 3.96	1218845-3	1218847-3	1218846-3
4	37	**.156** 3.96	1218845-4	1218847-4	1218846-4
5	50	**.156** 3.96	1218845-5	1218847-5	1218846-5
1	9	**.188** 4.78	1218854-1	1218856-1	1218855-1
2	15	**.188** 4.78	1218854-2	1218856-2	1218855-2
3	25	**.188** 4.78	1218854-3	1218856-3	1218855-3
4	37	**.188** 4.78	1218854-4	1218856-4	1218855-4
5	50	**.188** 4.78	1218854-5	1218856-5	1218855-5

Receptacle Assemblies — .040 [1.02] Post Dia.

Shell Size	No. Pos.	Post Ext. ± .020 [± 0.51]	Part Number		
			Tin Plated Shells[b]	Tin Plated Shells[a]	Zinc Plated Shells[a]
1	9	**.125** 3.18	1218848-1	1218850-1	1218849-1
2	15	**.125** 3.18	1218848-2	1218850-2	1218849-2
3	25	**.125** 3.18	1218848-3	1218850-3	1218849-3
4	37	**.125** 3.18	1218848-4	1218850-4	1218849-4
5	50	**.125** 3.18	1218848-5	1218850-5	1218849-5
1	9	**.156** 3.96	—	—	1218852-1
2	15	**.156** 3.96	—	—	1218852-2
3	25	**.156** 3.96	—	—	1218852-3
4	37	**.156** 3.96	—	—	1218852-4
5	50	**.156** 3.96	—	—	1218852-5
1	9	**.188** 4.78	1218857-1	1218859-1	1218858-1
2	15	**.188** 4.78	1218857-2	1218859-2	1218858-2
3	25	**.188** 4.78	1218857-3	1218859-3	1218858-3
4	37	**.188** 4.78	1218857-4	1218859-4	1218858-4
5	50	**.188** 4.78	1218857-5	1218859-5	1218858-5

Dimensions are shown for reference purposes only. Specifications subject to change.

Dimensions are in millimeters unless otherwise specified.

USA: +1 800 522 6752
Asia Pacific: +86 0 400 820 6015
UK: +44 800 267 666

For additional support numbers please visit www.te.com

AMPLIMITE Connectors, Series 109 (Continued)

Right-Angle, PCB Plugs, Series 109, with One Piece Insert (Industrial Grade)

Material and Finish

Shell — Steel, see below

[1] **Tin Plated Finish** — Tin .000400–.000550 [0.01020–0.01400] thick over copper .000050 [0.00127] min. thick

[2] **Zinc Plated RoHS Compliant Finish** — Zinc .000200–.000400 [0.00508–0.01016] thick, yellow trivalent chromate

Insert — Thermoplastic

Contact Material — Brass or Beryllium copper

Contact Finish — Gold with .000010 [0.00025] min. gold plate over .000050 [0.00127] min. nickel underplate

Interfacial Seal — Fluorosilicone

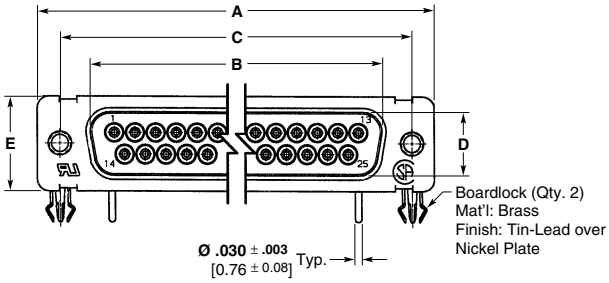

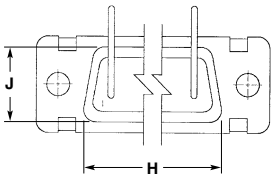

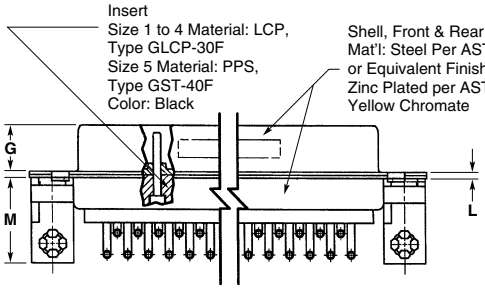

3 and 5 Positions (with Interfacial Seal)

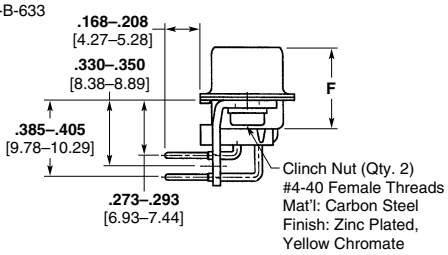

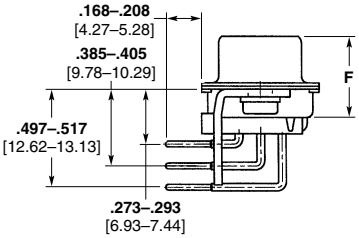

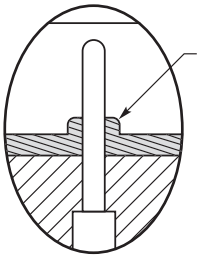

9 Position (with Locking Post)

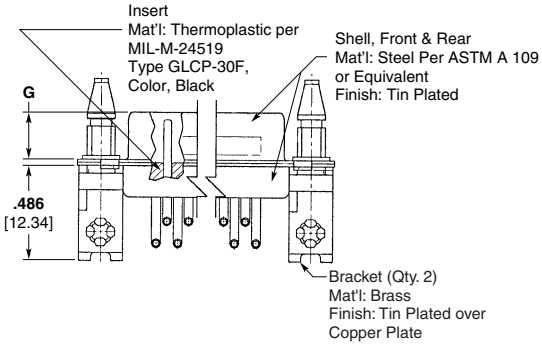

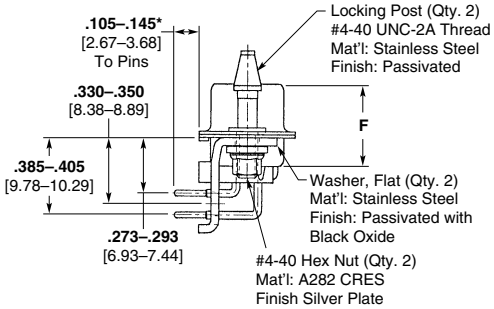

*Signal Contacts are solder dipped with SnPb 63/37 to meet the requirements of MIL-DTL-24308, method 208.

MS Shell Size	Connector Style	Dimensions										
		A	B	C	D	E	F	G	H	J	L	M
1	Plug	**1.198/1.228** 30.43/31.19	**.661/.671** 16.21/16.46	**.979/.989** 24.87/25.12	**.324/.334** 8.23/8.48	**.479/.509** 12.17/12.93	**.412/.432** 10.46/10.97	**.229/.238** 5.82/6.05	**.749/.769** 19.02/19.53	**.412/.432** 10.46/10.97	**.020/.040** 0.51/1.02	—
3	Plug	**2.073/2.103** 52.65/53.42	**1.529/1.539** 38.25/38.51	**1.847/1.857** 46.91/47.17	**.324/.334** 8.23/8.48	**.479/.509** 12.17/12.93	**.416/.436** 10.57/11.07	**.224/.236** 5.69/5.99	**1.615/1.635** 41.02/41.53	**.412/.432** 10.46/10.97	**.029/.049** 0.74/1.24	**.435/.443** 11.05/11.25
5	Plug	**2.620/2.650** 66.55/67.31	**2.074/2.084** 52.30/52.55	**2.401/2.411** 60.99/61.24	**.436/.446** 11.07/11.33	**.590/.620** 14.99/15.75	**.416/.436** 10.57/11.07	**.224/.236** 5.69/5.99	**2.168/2.188** 55.07/55.58	**.524/.544** 13.31/13.82	**.029/.049** 0.74/1.24	**.490/.498** 12.45/12.65

Plug Assemblies — .030 [0.76] Post Dia.

Shell Size	No. Pos.	With interfacial Seal	Part Number	
			Tin Plated Shells[1]	Zinc Plated RoHS Shells[2]
1	9	No	1218606-6	—
3	25	Yes	—	1218538-3
5	50	Yes	—	1218538-5

[1] See Material and Finish above.
[2] See RoHS compliant Material and Finish above.

Dimensions are shown for reference purposes only. Specifications subject to change.

Dimensions are in millimeters unless otherwise specified.

USA: +1 800 522 6752
Asia Pacific: +86 0 400 820 6015
UK: +44 800 267 666

For additional support numbers please visit www.te.com

AMPLIMITE Connectors, Series 109 (Continued)

Right-Angle, PCB Receptacles, Series 109, with One Piece Insert (Industrial Grade)

Material and Finish

Shell — Steel, tin plated

[1] **Tin Plated RoHS Compliant Finish** — Tin .000400–.000550 [0.01020–0.01400] thick over copper .000050 [0.00127] min. thick

Insert — Thermoplastic

Contact Material — Brass or Beryllium copper

Contact Finish — Gold with .000010 [0.00025] min. gold over .000050 [0.00127] min. nickel underplate

9 Position

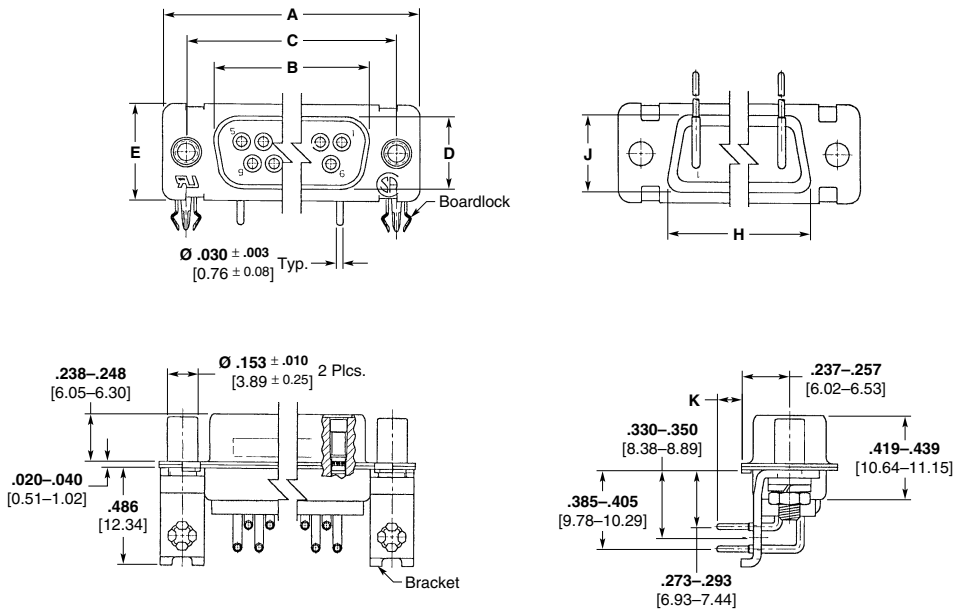

9 Position (with Locking Post)

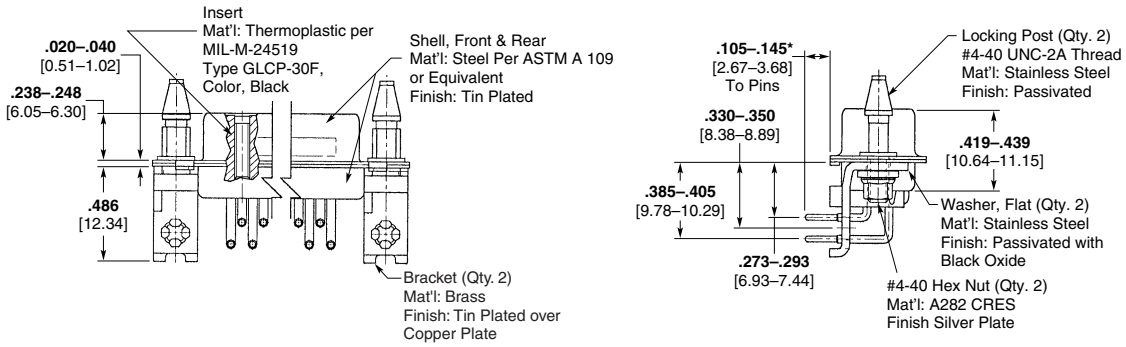

*Signal Contacts are solder dipped with SnPb 63/37 to meet the requirements of MIL-DTL-24308, method 208.

MS Shell Size	Connector Style	Dimensions A	B	C	D	E	H	J	K	Part Number
1	Receptacle	**1.198/1.228** 30.43/31.19	**.638/.648** 16.21/16.46	**.979/.989** 24.87/25.12	**.306/.316** 7.77/8.03	**.479/.509** 12.17/12.93	**.749/.769** 19.02/19.53	**.412/.432** 10.46/10.97	**.105/.145** 2.67/3.68	1218665-1[1]
									.136/.176 3.45/4.47	1218665-6[1]
							.749/.769 19.02/19.53	**.412/.432** 10.46/10.97	—	1218607-6[1]

[1] See Material and Finish above.
[2] See RoHS compliant Material and Finish above.

Dimensions are shown for reference purposes only. Specifications subject to change.

Dimensions are in millimeters unless otherwise specified.

USA: +1 800 522 6752
Asia Pacific: +86 0 400 820 6015
UK: +44 800 267 666

For additional support numbers please visit www.te.com

AMPLIMITE Connectors, Series 109 (Continued)

Connector Savers, Series 109, Standard Density

Connector savers prolong the life of permanently installed connectors which would otherwise be subjected to repeated cycles of mating and unmating, in applications such as test interfaces or on testing devices.

Material and Finish

Standard —
- **Shell** — Steel, cadmium plated
- **Contact Body** — Beryllium copper with .000050 [0.00127] min. gold plate over .000050 [0.00127] min. nickel underplate
- **Socket Hood** — Passivated stainless steel
- **Insert** — Glass filled polyester
- **Spacer** — Black nylon

Non Magnetic —
- **Shell** — Brass, gold plated
- **Contact Body** — Beryllium copper with .000050 [0.00127] min. gold plate over .000100 [0.00254] min. copper underplate
- **Socket Hood** — Brass with .000050 [0.00127] min. gold over .000100 [0.00254] min. copper underplate
- **Insert** — Glass filled polyester
- **Spacer** — Black nylon

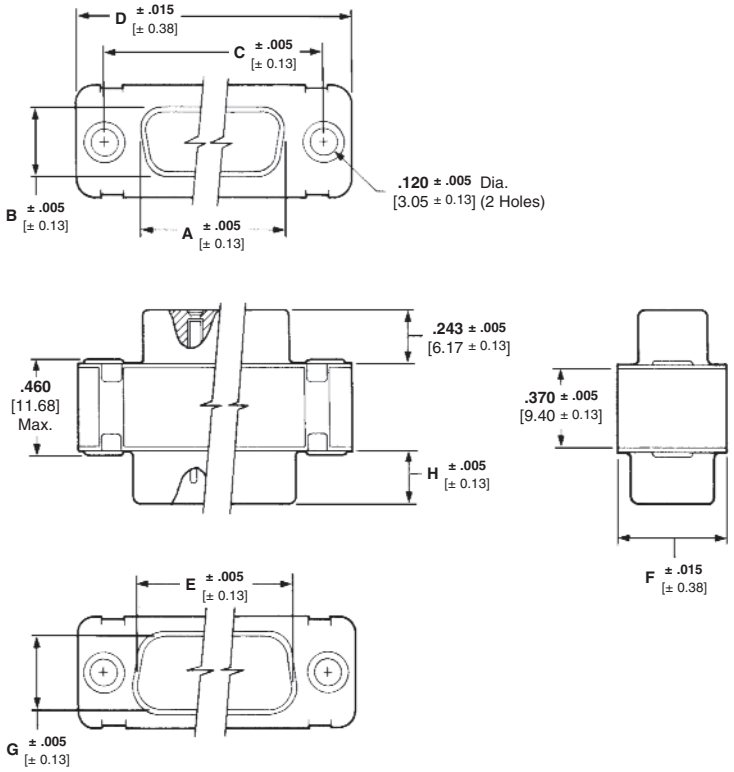

No. of Contact Pos. (Shell Size)	Dimensions							
	A (outside)	B (outside)	C	D	E (inside)	F	G (inside)	H
9 (1)	**.643** 16.33	**.311** 7.9	**.984** 24.99	**1.213** 30.81	**.666** 16.92	**.494** 12.55	**.329** 8.36	**.235** 5.97
15 (2)	**.971** 24.66	**.311** 7.9	**1.312** 33.32	**1.541** 39.14	**.994** 25.25	**.494** 12.55	**.329** 8.36	**.235** 5.97
25 (3)	**1.511** 38.38	**.311** 7.9	**1.852** 47.04	**2.088** 53.04	**1.534** 38.96	**.494** 12.55	**.329** 8.36	**.230** 5.84
37 (4)	**2.159** 54.84	**.311** 7.9	**2.500** 63.5	**2.729** 69.32	**2.182** 55.42	**.494** 12.55	**.329** 8.36	**.230** 5.84
50 (5)	**2.064** 52.43	**.423** 10.74	**2.406** 61.11	**2.635** 66.93	**2.079** 52.81	**.605** 15.37	**.441** 11.20	**.230** 5.84

No. of Contact Pos. (Shell Size)	Standard (Cadmium Plated Steel Shell)	Non-Magnetic (Gold Plated Brass Shell)
9 (1)	212559-1	212559-2
15 (2)	212560-1	212560-2
25 (3)	212561-1	212561-2
37 (4)	212562-1	212562-2
50 (5)	212563-1	212563-2

Dimensions are shown for reference purposes only. Specifications subject to change.

Dimensions are in millimeters unless otherwise specified.

USA: +1 800 522 6752
Asia Pacific: +86 0 400 820 6015
UK: +44 800 267 666

For additional support numbers please visit www.te.com

AMPLIMITE Connectors, Series 109 Cross Reference

Material and Finish

Shell — Steel, tin plated per ASTM-B-545, .000400–.000550 [0.01016–0.01397] thick.

Insert — Approved material per MIL-DTL-24308.

Retention Clips — Stainless steel or copper alloy.

Related Product Data

Series 109 Connectors — page 8-43

Attention: Connector Marking

Connector marking may differ from package marking.

Note: Meets 48 hr. salt spray requirements of MIL-DTL-24308.

Series 109 Connectors

No. of Contact Pos. (Shell Size)	Part Number	Description	Dimensions
9 (1)	205162-6	Plug Only	Refer to page 8-43
	205162-5	Plug Only with Grounding Indents	
	205161-5	Receptacle Only	
15 (2)	205164-6	Plug Only	Refer to page 8-43
	205164-5	Plug Only with Grounding Indents	
	205163-5	Receptacle Only	
25 (3)	205166-5	Plug Only	Refer to page 8-43
	205166-4	Plug Only with Grounding Indents	
	205165-4	Receptacle Only	
37 (4)	205168-7	Plug Only	Refer to page 8-43
	205168-6	Plug Only with Grounding Indents	
	205167-5	Receptacle Only	
50 (5)	205170-5	Plug Only	Refer to page 8-43
	205170-4	Plug Only with Grounding Indents	
	205169-4	Receptacle Only	

Dimensions are shown for reference purposes only. Specifications subject to change.

Dimensions are in millimeters unless otherwise specified.

USA: +1 800 522 6752
Asia Pacific: +86 0 400 820 6015
UK: +44 800 267 666

For additional support numbers please visit www.te.com

AMPLIMITE Connectors, Coax Mix

Crimp, Power/Coax/Signal Combination Standard Density, Series 109 Connectors

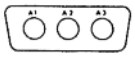
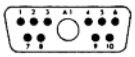
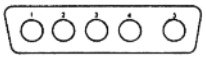

Shell Size	2	2	3	3
Contact Arrangement	3C3[5]	11C1	5C5	9C4
No. of Signal Contacts	0	10	0	5
No. of Coaxial Contacts	3	1	5	4

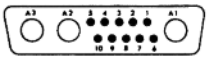

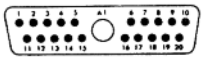

Shell Size	3	3	3	4
Contact Arrangement	13C3	17C2	21C1	8C8
No. of Signal Contacts	10	15	20	0
No. of Coaxial Contacts	3	2	1	8

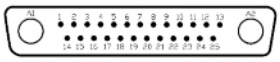
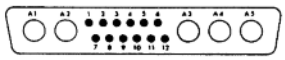
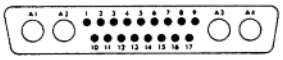
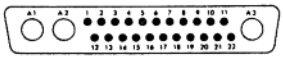

Shell Size	4	4	4	4
Contact Arrangement	27C2	17C5	21C4	25C3
No. of Signal Contacts	25	12	17	22
No. of Coaxial Contacts	2	5	4	3

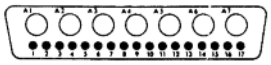
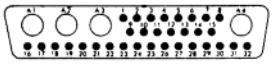

Shell Size	5	5
Contact Arrangement	24C7	36C4
No. of Signal Contacts	17	32
No. of Coaxial Contacts	7	4

Material and Finish

Shell — Steel or copper alloy
[a] .000200 [.0000079] min. thick plating.
[b] .000400 [.0000157] min. thick plating.

Plating — Cadmium, tin, gold or zinc

Insert — Approved material per MIL-DTL-24308

Retention Clips — Stainless steel or copper alloy

Contact Selection

Standard:
Size 8 coax: Table I, page 8-66
Size 8 power: page 8-65
Size 20 signal: pages 8-40 to 8-42, 8-46 and 8-47

Insert Arrangement	Standard									
	Cad Plated Steel Shell (.120 Mounting Hole)		RoHS Zinc Plated Steel Shell (.120 Mntg. Hole)		RoHS Tin Plated Steel Shell (.120 Mntg. Hole)[a]		NASA Gold Plated Brass (.120 Mounting Hole)		NASA Gold Plated Brass (.154 Mounting Hole)	
	Plug (Pin)	Receptacle (Socket)	Plug (Pin)	Receptacle (Socket)	Plug[6] (Pin)	Receptacle (Socket)	Plug (Pin)	Receptacle (Socket)	Plug (Pin)	Receptacle (Socket)
3C3	448153-1	445705-4	5-448153-1	5-445705-4	448153-4[6]	445705-1	448153-2	445705-2	448153-3	445705-3
11C1	211111-1	211112-1	5-211111-1	5-211112-1	211111-4[6]	211112-4	211111-2	211112-2	211111-3	211112-3
5C5	212491-1	212059-1	5-212491-1	5-212059-1	212491-3[6]	212059-3	212491-6	212059-2	212491-7	212059-6
9C4	212498-1	212502-1	5-212498-1	5-212502-1	212498-4[6]	212502-5	212498-2	212502-2	212498-3	212502-3
13C3	208810-1	208811-1	5-208810-1	5-208811-1	208810-2[6]	208811-2	208810-3	208811-3	208810-4	208811-4
17C2	212506-1	212510-1	5-212506-1	5-212510-1	212506-5[6]	212510-4	212506-2	212510-2	212506-4	212510-3
21C1	212522-1	212526-1	5-212522-1	5-212526-1	212522-2[6]	212526-2	212522-3	212526-3	212522-4	212526-4
8C8	446405-1	445730-1	5-446405-1	5-445730-1	446405-4[6]	445730-5	446405-2	445730-3	446405-3	445730-4
27C2	212538-1	212542-1	5-212538-1	5-212542-1	212538-4[6]	212542-4	212538-2	212542-2	212538-3	212542-3
17C5	212514-1	212518-1	5-212514-1	5-212518-1	212514-5[6]	212518-5	212514-3	212518-3	212514-4	212518-4
21C4	212530-1	212534-1	5-212530-1	5-212534-1	212530-4[6]	212534-4	212530-2	212534-2	212530-3	212534-3
25C3	208742-1	208551-1	5-208742-1	5-208551-1	208742-4[6]	208551-4	208742-2	208551-2	208742-3	208551-3
24C7	208743-1	208552-1	5-208743-1	5-208552-1	208743-4[6]	208552-4	208743-2	208552-2	208743-6	208552-5
36C4	208744-1	208550-1	5-208744-1	5-208550-1	208744-5[6]	208550-4	208744-3	208550-2	208744-4	208550-3

Notes:
1. NASA connectors listed above are qualified to NASA specification 311-P-405. See pages 8-104 and 8-105 for NASA cross reference.
2. Plug insert arrangements shown. Receptacle arrangement is mirror image.
3. Cable clamp/strain relief hardware cannot be used with these arrangements.
4. See pages 8-93 and 8-94 for PCB layouts.
5. The 3C3 arrangement can be mismated 180°. Contact TE Connectivity or call Technical Support for keyed Part Numbers, 1218654-1 and 1218655-1.
6. Tin plated plugs only include grounding indents.

Dimensions are shown for reference purposes only. Specifications subject to change.

Dimensions are in millimeters unless otherwise specified.

USA: +1 800 522 6752
Asia Pacific: +86 0 400 820 6015
UK: +44 800 267 666

For additional support numbers please visit www.te.com

AMPLIMITE Connectors, Coax Mix (Continued)

Crimp, Power/Coax/Signal Combination Standard Density, Series 109 Connectors
(Continued)

Material and Finish

Shell — Steel or copper alloy
[a] .000200 [.0000079] min. thick plating.
[b] .000400 [.0000157] min. thick plating.

Plating — Cadmium, tin-lead, tin, gold or zinc

Insert — Approved material per MIL-DTL-24308

Retention Clips — Stainless steel or copper alloy

Contact Selection

Blindmate:
Size 8 coax: Table II, page 8-67
Size 8 power: page 8-65
Size 20 signal: pages 8-40 to 8-42, 8-46 and 8-47

Insert Arrangement	Blindmate			
	Cad Plated Steel Shell (.120 Mounting Hole)		RoHS Zinc Plated Steel Shell (.120 Mntg. Hole)	
	Plug (Pin)	Receptacle (Socket)	Plug (Pin)	Receptacle (Socket)
3C3	447717-1	447718-1	5-447717-1	5-447718-1
11C1	447721-1	447722-1	5-447721-1	5-447722-1
5C5	446630-1	212049-3	—	5-212049-3
9C4	445701-1	212051-2	—	—
13C3	447723-1	212057-2	5-447723-1	5-212057-2
17C2	447724-1	212053-3	5-447724-1	5-212053-3
21C1	447727-1	212055-2	—	—
8C8	447719-1	447720-1	5-447719-1	5-447720-1
27C2	447732-1	447733-1	—	—
17C5	447725-1	447726-1	—	—
21C4	447728-1	445726-1	—	5-445726-1
25C3	447730-1	447731-1	—	—
24C7	446631-1	445000-2	—	—
36C4	446710-1	446711-1	5-446710-1	5-446711-1

Notes:
1. Plug insert arrangements shown. Receptacle arrangement is mirror image.
2. Cable clamp/strain relief hardware cannot be used with these arrangements.
3. See pages 8-93 and 8-94 for PCB layouts.
4. **Blindmate** plugs feature a chamfered lead-in on the front shell, which is constructed of aluminum alloy. See page 8-48 for shell dimensions. **Blindmate** receptacles feature float bushings installed in the mounting holes. See pages 8-43 and 8-44 for shell dimensions.
5. The 3C3 arrangement can be mismated 180°. Contact TE Connectivity or call Technical Support for keyed Part Numbers, 1218654-1 and 1218655-1.
6. All connector plugs with grounding indents except the cadmium plated.

AMPLIMITE Connectors, Coax Mix (Continued)

Boardmount Power/Coax/ Signal/Combination Standard Density, Series 109 Connectors

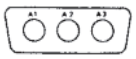
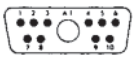
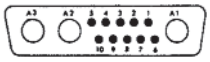
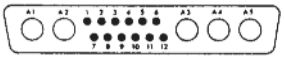

Shell Size	2	2	3	4
Contact Arrangement	3C3[4]	11C1	13C3	17C5
No. of Signal Contacts	0	10	10	12
No. of Coaxial Contacts	3	1	3	5

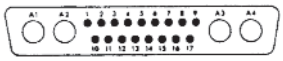
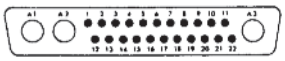
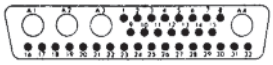

Shell Size	4	4	5
Contact Arrangement	21C4	25C3	36C4
No. of Signal Contacts	17	22	32
No. of Coaxial Contacts	4	3	4

Material and Finish

Shell — Steel or copper alloy

Plating — Cadmium or tin

[a] **Tin Plated Finish** — Tin .000400–.000550 [0.01020–0.01400] thick over .000050 [0.00127] copper min.

[b] **Tin Plated RoHS Compliant Finish** — Tin .000200–.000400 [0.00508–0.01016] thick over .000100–.000200 [0.00254–0.00508] copper

Insert — Approved material per MIL-DTL-24308

Contact Selection

Standard (If not shown with connector):

Size 8 coax: Table I, page 8-66

Size 8 power: page 8-65

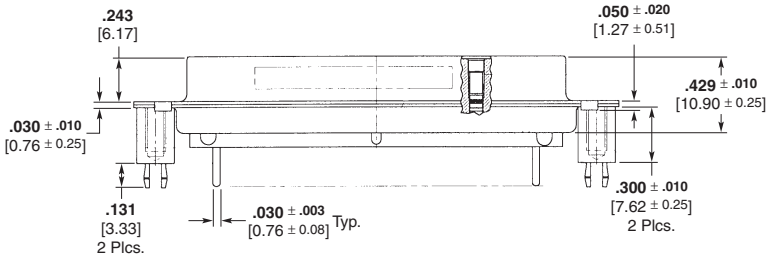

Typical Vertical Receptacle

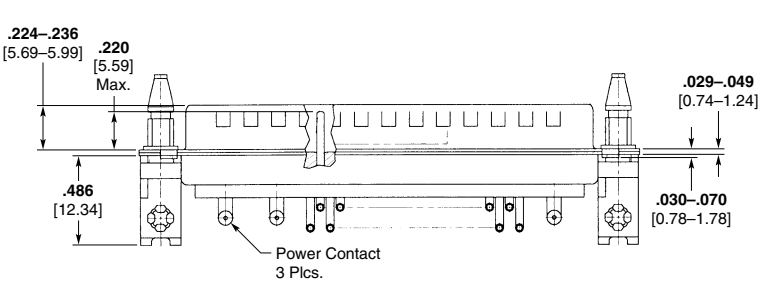

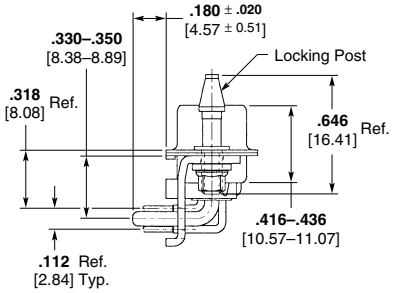

Typical Right-Angle Plug

Contact Config.	Shell Plating	Style	Hardware Options		4-40 Standoff			Contacts		Spacers	Part Number
			Screwlocks	Boardlocks	Clinchnuts	w/ Boardlocks	Locking Posts	Power	Coax		
3C3	Tin	Vertical Recept.	No	No	No	Yes	No	No	No	No	1218896-1[a]
11C1	Cad.	Vertical Plug	No	No	No	No	No	No	Yes	Yes	1218128-1[a]
11C1	Cad.	Vertical Recept.	No	No	No	No	No	No	Yes	Yes	1218129-1[a]
13C3	Tin	Vertical Plug	No	No	No	Yes	No	No	No	No	1218816-1[a]
17C5	Tin	Right-Angle Plug	Yes	Yes	No	No	No	Yes	No	No	1218939-1[a]
21C4	Tin	Vertical Recept.	No	No	No	Yes	No	No	No	No	1218887-1[a]
25C3	Tin	Right-Angle Plug	No	Yes	No	No	Yes	Yes	No	No	1218611-1[a]
36C4	Tin	Vertical Recept.	No	Yes	No	Yes	No	No	No	No	1218807-1[a] 5-1218807-1[b]

Notes:

1. Plug insert arrangements shown. Receptacle arrangement is mirror image.
2. See TE Connectivity customer drawing for PCB layouts.
3. The 3C3 arrangement can be mismated 180°. Contact your TE Sales Engineer or call Technical Support for keyed Part Numbers.

[a] See Tin Plated finish above.

[b] See Tin Plated RoHS compliant finish above.

Dimensions are shown for reference purposes only. Specifications subject to change.

Dimensions are in millimeters unless otherwise specified.

USA: +1 800 522 6752
Asia Pacific: +86 0 400 820 6015
UK: +44 800 267 666

For additional support numbers please visit www.te.com

AMPLIMITE Connectors, Coax Mix (Continued)

Size 8 Contacts (Power) for Standard Density, Series 109 Power/Coax/ Signal Connectors

Crimp Contacts

Material and Finish

Copper alloy, plated gold over nickel underplate

Retention Clips — Stainless steel or phosphor bronze

Note: clip may differ from view shown

Product Specification

For Crimp Contacts — 108-10045 (current rating and wire size)

For PCB Contacts — 108-10045-1

Hand Crimp Tool — AMP 608651-1 with positioner AMP 608651-2

Extraction Tool — 318813-1

Printed Circuit Board Contacts

(Use these contacts only with the **Standard** connectors on pages 8-62 and 8-63. Do not use with **Blindmate** connectors.)

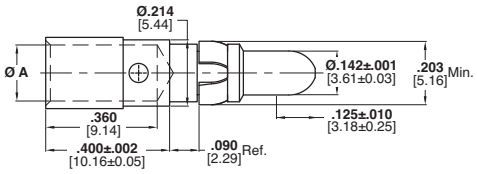

Pin

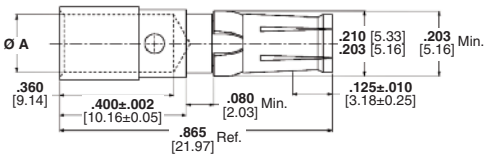

Socket

Wire Size Range AWG	Wire Size Range mm²	Dim. A	Part Numbers: 50 Gold Pins[3]	30 Gold Pins[3]	50 Gold Sockets	30 Gold Sockets	Blindmate 50 Gold Pins	30 Blindmate Gold Pins
8[2]	8	**.230** 5.84	211159-1	211159-3	211161-1	211161-3	1218385-1	—
10[2]	5	**.185** 4.69	211159-2	211159-4	211161-2	211161-4	—	—
12-14	2-3	**.150** 3.81	212007-1	212007-2	212008-1	212008-2	1218483-1	1218483-2
16-18	0.8-1.4	**.102** 2.59	212013-1[1]	212013-2[1]	212014-1[1]	212014-2[1]	—	—

Notes: 1. 16-18 size use 608668-1 with Positioner 608668-2.
2. Retention clip shown is for 12-14, 16-18 Awg. See TE Connectivity customer drawing for 8, 10 AWG Retention Clip.
3. Use these contacts only with the **Standard** connectors on pages 8-62 and 8-63. Do not use with **Blindmate** connectors.

Right-Angle

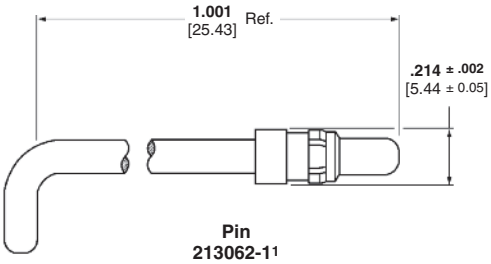

Pin
213062-1[1]
213062-2[2]

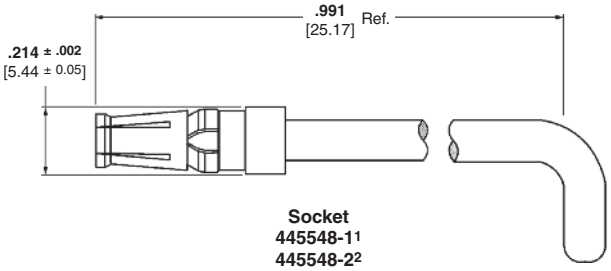

Socket
445548-1[1]
445548-2[2]

Vertical

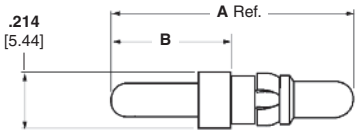

Pin
See Table

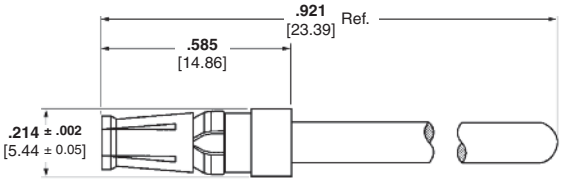

Socket
445798-1[1]
445798-2[2]

Part Number	Dim A	Dim B
449379-1[1]	**.931** [23.65]	**.461** [11.71]
449379-2[1]	**.845** [21.46]	**.375** [9.52]
1-449379-0[2]	**.931** [23.65]	**.461** [11.71]
1-449379-1[2]	**.845** [21.46]	**.375** [9.52]

Note: 1. Standard connector, .000050 [0.00127] gold plating.
2. Standard connector, .000030 [0.00076] gold plating.

AMPLIMITE Connectors, Coax Mix (Continued)

RF Contacts for Standard Density, Series 109 Power/ Coax/Signal Connectors

Performance Characteristics

Frequency Range — 0 to 500 MHz

Operating Voltage, Max. — 275 vac rms @ sea level

Termination Resistance, Max. — Center Contact — 6.0 milliohms
Outer Contact — 3.0 milliohms

Insulation Resistance, Min. — 5,000 megohms @ 500 vdc

Dielectric Withstanding Voltage — Sea Level — 800 Volts rms
30,000 ft [9,144 m] — 525 volts rms
70,000 ft [21,336m] — 275 volts rms

VSWR to 500MHz, Max.

Pin/Socket	VSWR
Straight/Straight	1.30
Right-Angle/Straight	1.35
Right-Angle/Right-Angle	1.40

RF Crosstalk — 90dB @ 5-500 MHz

Mating Force, Max. — 4.0 lb [17.8 N]

Unmating Force, Min. — 2.0 oz [0.556 N]

Contact Retention — 20 lb [89 N]

Contact Durability — 500 cycles

Cable RG/U	Force lb	Force [N]
316, 188, 174, 179, 179A, 179B	20	89
188-type Double-Braid	35	155.8
142, 142A, 142B	50	222.5

Operating Temperature — 131°F to 257°F [55°C to +125°C]

Thermal Shock — 131°F to 257°F [55°C to +125°C] per MIL-STD-1344, Method 1003, Cond. A

Physical Shock — 50 G's per MIL-STD-1344, Method 2004, Cond. A

Vibration — MIL-STD-1344, Method 2005, Cond. II

Moisture Resistance — 240 hours per MIL-STD-1344, Method 1002, Cond. II

Salt Fog — 48 hours per MIL-STD-1344, Method 1001, Cond. B

Extraction Tool Numbers

Subminiature D Housings — 58095-1 AMPLIMITE Connector

AMP-HDI Connector Housings — 58095-2

Material and Finish

Brass — per QQ-B-626 and MIL-C-50

Phosphor Bronze — per QQ-B-750

Beryllium Copper — per QQ-C-530

PTFE—per MIL-P-19468

Nylon—per MIL-M-20693

Finish

[a] **Bright Tin-Lead Plating** — per ASTM-B-571

[b] **Bright Tin Plating** — per ASTM-B-545

Copper Plating — per MIL-C-14550

Gold Plating — per MIL-G-45204

Nickel Plating — per QQ-N-290

Extraction Tool — 318813-1

Hand Crimp Tool — 69710-1

Pneu. Crimp Tool — 69365-8

Dies for Crimp Tools — See table

Instruction Sheet —
408-6755 Size 8 Coaxial RF 50-Ohm and Non-Impedance Matched Pin and Socket Contact Kits

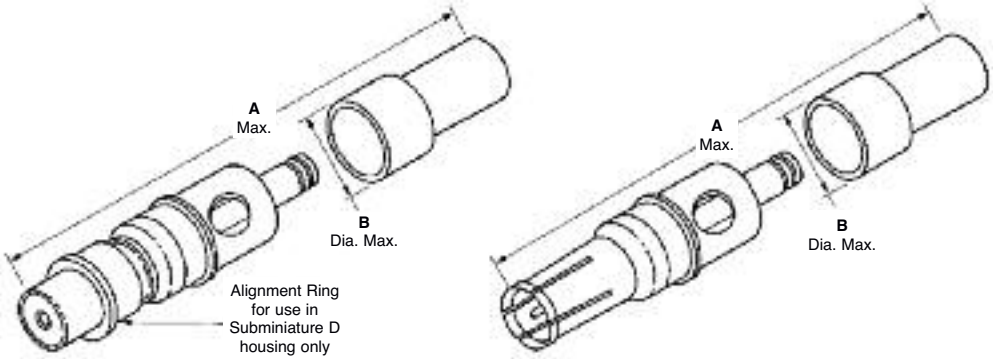

Pin Socket

Table I - Standard

RG/U Cable	Dimensions A	Dimensions B	Contact Part Numbers: Non-Impedance Matched Pin	Non-Impedance Matched Socket	50 Ohm Pin	50 Ohm Socket	Die Insert for Tools
178, 178A, 178B 196, 196A	**.950** 24.13	**.235** 5.94	228618-5[a] 5-228618-5[b]	—	—	—	59993-1
174, 316 188, 188A	**.956** 24.28	**.234** 5.94	228618-1[a] 5-228618-1[b]	228596-1[a] 5-228596-1[b]	221980-1	1883630-1	59993-1
179, 179A, 179B 187, 187A, 161 Belden 9221	**.956** 24.28	**.234** 5.94	228618-2[a] 5-228618-2[b]	228596-2[a] 5-228596-2[b]	221980-3	—	59993-1
188-Type Double Braid	**.956** 24.28	**.234** 5.94	228618-3	228596-3	—	—	59993-1
142, 142A, 142B 400, Belden 9246	**1.080** 27.43	**.255** 6.48	228618-4[a] 5-228618-4[b]	228596-4[a] 5-228596-4[b]	—	—	58212-1

Notes:
1. Non Impedance Matched contacts and 50 ohm contacts are not intermateable.
2. Use these contacts only with the **Standard** connectors on pages 8-62 and 8-64.
[a] See Material and Finish above.
[b] See Material and Finish for RoHS compliant Part Numbers above.

Dimensions are shown for reference purposes only. Specifications subject to change.

Dimensions are in millimeters unless otherwise specified.

USA: +1 800 522 6752
Asia Pacific: +86 0 400 820 6015
UK: +44 800 267 666

For additional support numbers please visit www.te.com

AMPLIMITE Connectors, Coax Mix (Continued)

RF Contacts for Standard Density, Series 109 Power/ Coax/Signal Connectors
(Continued)

Material and Finish

Center Contacts — Beryllium Copper or Brass per QQ-B-626, per QQ-C-530, gold plated

Outer Contacts — Beryllium copper per QQ-C-530, gold plated

Plugs — Beryllium copper per QQ-C-530, gold plated

Jack — Stainless steel per ASTM-A-582, gold plated

Shells — Stainless steel per ASTM-A-582, passivated

Panel Shells — Brass per QQ-B-626, nickel plated

Dielectrics — PTFE per ASTM-D-1457

Grip Rings — Brass per MIL-C-50 or Beryllium Copper per QQ-C-530, nickel plated

Springs — Steel wire per QQ-W-470

Bushings — Stainless steel per ASTM-A-582, passivated

Retention Springs — Beryllium Copper per QQ-C-530, Tin-Lead Plated

Finishes

Passivate per QQ-P-35
Gold per MIL-G-45204
Nickel per QQ-N-290
Tin-Lead per ASTM-B-545

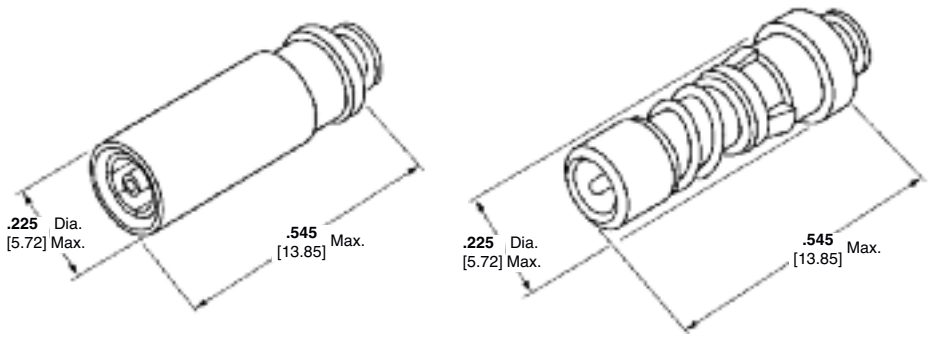

Pin Socket

Table II - 2.8 mm Blindmate

RG/U Cable	Contact Type	Part Number	Crimp Tool	Die Set	Locator	Insertion Tool	Extraction Tool
405 Semi-Rigid .086 [2.18]	Pin (Plug)	413242-1	59980-1	312253-2	852113-1	852115-1	2-305183-0
	Socket (Jack)	413249-1	59980-1	312253-2	852114-1	—	318813-1

Note:
1. Use these contacts only with the **Blindmate** connectors on page 8-63.

Performance Characteristics

Electrical Characteristics

Nominal Impedance — 50 ohms

Frequency Range —
2.8 mm: 0 to 26.5 GHz
2.8 mm for size 8 cavities: 0 to 40 GHz

Operating Voltage —
RG-402/U Cable (3.58 [.141] O.D.)
500 volts rms at 60 Hz (sea level)
125 volts rms at 60 Hz
(21 336 m [70,000 ft])

RG-405/U Cable (2.18 [.086] O.D.)
335 volts rms at 60 Hz (sea level)
85 volts rms at 60 Hz
70,000 ft [21,336 m]

Mechanical Characteristics

Cable Retention —
RG-402/U Cable (3.58 [.141] O.D.)–
60 lb [266.9 N], min.
RG-405/U Cable (2.18 [.086] O.D.)–
30 lb [133.4 N], min.

Connector Mating Force —
2.8 mm: 3 lbs Max.

Environmental Characteristics

Temperature Range —
–85°F to +221°F [–65°C to +105°C]

Technical Documents

Instruction Sheet —
408-9582 Insertion tool 852115-1 for blindmate 2.8mm plug contact 413242-1
408-9585 Blindmate 2.8mm contacts for semi-rigid .086 in. coaxial cable

Dimensions are shown for reference purposes only. Specifications subject to change.
Dimensions are in millimeters unless otherwise specified.
USA: +1 800 522 6752
Asia Pacific: +86 0 400 820 6015
UK: +44 800 267 666
For additional support numbers please visit www.te.com

AMPLIMITE Connectors, Coax Mix Cross Reference

Material and Finish

Shell — Steel, tin plated per ASTM-B-545, .000400–.000550 [0.01016–0.01397] thick.

Insert — Approved material per MIL-DTL-24308.

Retention Clips — Stainless steel or copper alloy.

Related Product Data

Coax Mix Connectors — page 8-62

Attention: Connector Marking

Connector marking may differ from package marking.

Note: Meets 48 hr. salt spray requirements of MIL-DTL-24308.

Coax Mix Connectors

Insert Arrangement (Shell Size)	Part Number	Description	Dimensions
11C1 (2)	—	Plug Only	Refer to page 8-43
	211111-6	Plug Only with Grounding Indents	
	211112-6	Receptacle Only	
21C1 (3)	212522-7	Plug Only	Refer to page 8-43
	212522-6	Plug Only with Grounding Indents	
	212526-6	Receptacle Only	
5C5 (3)	1-212491-0	Plug Only	Refer to page 8-43
	212491-9	Plug Only with Grounding Indents	
	1-212059-0	Receptacle Only	
21C4 (4)	212530-6	Plug Only	Refer to page 8-43
	212530-5	Plug Only with Grounding Indents	
	212534-5	Receptacle Only	
24C7 (5)	208743-5	Plug Only	Refer to page 8-43
	208743-7	Plug Only with Grounding Indents	
	208552-6	Receptacle Only	

Dimensions are shown for reference purposes only. Specifications subject to change.

Dimensions are in millimeters unless otherwise specified.

USA: +1 800 522 6752
Asia Pacific: +86 0 400 820 6015
UK: +44 800 267 666

For additional support numbers please visit www.te.com

AMPLIMITE Connectors, Series 90

Series 90 Connectors

Insert Arrangements

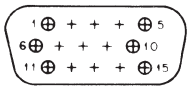

15 Position, Shell Size 1
MS 18273-2

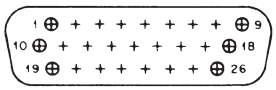

26 Position, Shell Size 2
MS 18274-2

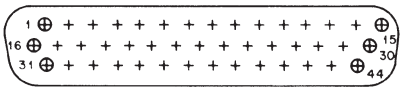

44 Position, Shell Size 3
MS 18275-2

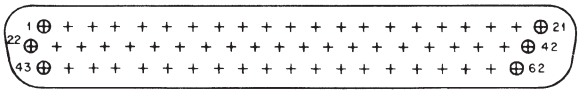

62 Position, Shell Size 4
MS 18276-2

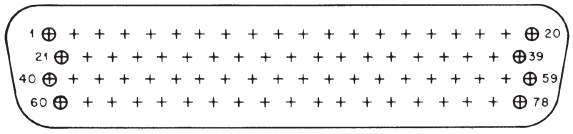

78 Position, Shell Size 5
MS 18277-2

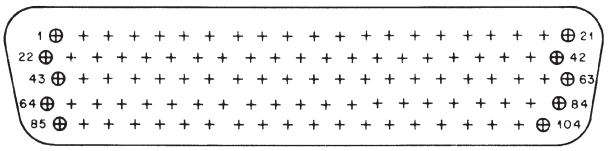

104 Position, Shell Size 6
MS 14004-1

Note: Mating face of plug shown: receptacle is mirror image.

Performance Specifications

All Series 90 AMPLIMITE military connectors conform to the latest amendments of military specification MIL-DTL-24308. For more detailed information, refer to MIL-DTL-24308.

All Series 90 connectors are designed for a –67°F to 257°F [–55°C to +125°C] temperature range.

Technical Documents List

The following is a list of technical documents that cover the application and performance of AMPLIMITE Series 90 military connectors, contacts, tooling and accessories.

Military Specifications

MIL-DTL-24308	Connectors, Electric, Rectangular, Miniature Polarized Shell, Rack and Panel, General Specifications for
MIL-C-39029	Contacts, Electrical Connector, General Specification for

NASA Specification

GSFC-S-311-P-4	Non-Magnetic Connectors, General Specification for

Instruction Sheets

408-7516	Application Tooling for MIL-C-39029 Contacts
408-7610	Application and Maintenance for Hand Crimping Tool 90294-1
408-7508	Insertion/Extraction Tools 91067-1, 91067-2 and 91067-3
408-7837	Female Screwlock Kit 205817-8 and Male Screw/Retainer Kit 211883-5

Catalog 1308940
Revised 9-14

www.te.com

Dimensions are shown for reference purposes only. Specifications subject to change.

Dimensions are in millimeters unless otherwise specified.

USA: +1 800 522 6752
Asia Pacific: +86 0 400 820 6015
UK: +44 800 267 666

For additional support numbers please visit www.te.com

AMPLIMITE Connectors, Series 90 (Continued)

Size 22 Crimp Contacts for Series 90 Connectors (AS39029)

Snap-In Contacts .030 [0.76] Pin Diameter

Material and Finish

[a] **Contact Body** — Copper alloy plated gold .000005 [0.000127] min. thick. over nickel underplate
[a] **Mating Area** — Gold .00005 [0.00127] min. thick. over nickel underplate
[b] **Contact Body and Mating Area** — Gold min. .00005 [0.00127] min. thick. over nickel underplate
Socket Hood — Passivated stainless steel

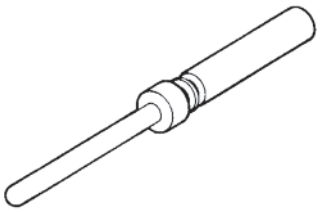

Pin
M39029/58-360
(Supersedes M24308/13-1)

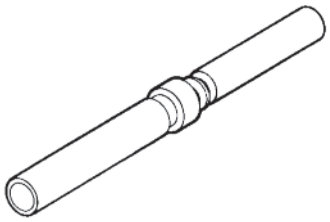

Socket
M39029/57-354
(Supersedes M24308/12-1)

Wire Size Range AWG	Wire Size Range [mm²]	Ins. Dia. (Max.)	Contact Configuration	Tape Mounted Contacts[1] AMP Part No.	Loose Piece Contacts Military Part No. (AS39029/)	Loose Piece Contacts AMP Part No.	Hand Tool Tool No. (M22520/)	Hand Tool Positioner No. (M22520/)	Contact Color Bands
22-28	0.4-0.8	**.054** 1.38	Pin	204370-5[a]	58-360	204370-2[a]	02-01	02-09	orange, blue, black
			Socket	204351-2[a]	57-354	204351-1[a]	02-01	02-06	orange, green, yellow
22-28	0.4-0.8	**.054** 1.38	Pin	1-204370-2[b]	58-360	1-204370-3[b]	02-01	02-09	orange, blue, black
			Socket	204351-6[b]	57-354	204351-5[b]	02-01	02-06	orange, green, yellow

[1]Tape mounted contacts are used in the AMP-TAPEMATIC Stripper/Crimper Machine Part Number **599406-7** (page 8-89).
Notes: 1. These contacts are used in Series 90 military connectors.
2. Insertion/Extraction Tool Part Number **91067-1** (Military Part Number **M81969/1-04**) is used to install and remove pin and socket contacts.
3. See Instruction Sheet 408-7516 for wire length, tool and selector settings.
4. Color bands are read in the direction of terminal (wire barrel) end to mating end.

Size 22 Crimp Contacts for Series 90 Connectors (Industrial Grade)

Snap-In Contacts .030 [0.76] Pin Diameter

Material and Finish

Pin Body — Copper alloy with .000050–.000100 [0.00127–0.00254] gold plate over .000050–.000150 [0.00127–0.00381] nickel underplate

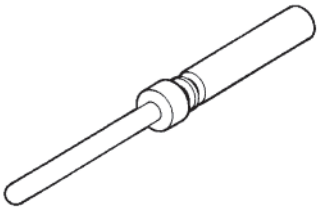

Pin

Wire Size Range AWG	Wire Size Range [mm²]	Ins. Dia. (Max.)	Contact Configuration	Tape Mounted Contacts[1] Part Number	Loose Piece Contacts Part Number	Hand Tool Tool No. (M22520/)	Hand Tool Positioner No. (M22520/)
22-28	0.4-0.8	**.054** 1.38	Pin	1218699-2	1218699-1	02-01	02-09
			Socket	—	—	—	—

[1]Tape mounted contacts are used in the AMP-TAPEMATIC Stripper/Crimper Machine Part Number **599406-7** (page 8-89).
Notes: 1. These contacts are used in Series 90 connectors.
2. Insertion/Extraction Tool Part Number **91067-1** (Military Part Number **M81969/1-04**) is used to install and remove pin and socket contacts.
3. See Instruction Sheet 408-7516 for wire length, tool and selector settings.

Catalog 1308940
Revised 9-14

www.te.com

Dimensions are shown for reference purposes only. Specifications subject to change.

Dimensions are in millimeters unless otherwise specified.

USA: +1 800 522 6752
Asia Pacific: +86 0 400 820 6015
UK: +44 800 267 666

For additional support numbers please visit www.te.com

AMPLIMITE Connectors, Series 90 (Continued)

Size 22 Posted Contacts for Series 90 Connectors

Material and Finish

Pin and Socket Body — Leaded nickel copper or beryllium copper

Socket Hood — See chart below

Pin and Socket Insertion/Extraction Tool

AMP Part Number 91067-1 or MIL Part Number M81969/1-04

Insertion tip, for replacement Part Number 126237-1

Extraction tip, for replacement Part Number 126195-2

Pin (See Drawing Number 207683 for Latest Configurations)

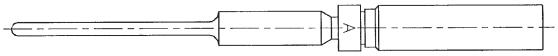

Socket (See Drawing Number 207684 for Latest Configurations)

Notes:
1. Contacts on this page can be used with connectors on pages 8-72 to 8-78, 8-85. See page 8-92 for PCB layouts.
2. Mating End of pin and socket complies with MIL-C-39029.

Post Diameter ± .002 [± .050]	Post Extension C ± .025 [± 0.63]	Part Numbers Pin	Part Numbers Socket	Contact Plating Pin	Contact Plating Socket	Socket Hood Material and Finish
.018 0.46	.175 4.45	207683-6	207684-3	.000050–.000100 [0.00127–0.00254] thick gold plate over .000100–.000150 [0.00254–0.00381] thick copper underplate	.000050–.000100 [0.00127–0.00254] thick gold plate over .000100–.000250 [0.00254–0.00635] thick copper underplate	Brass or Beryllium copper with .000050–.000100 [0.00127–0.00254] thick gold plate over .000100–.000250 [0.00254–0.00635] thick copper underplate
	.275 6.99	207683-2	207684-1			
	.525 13.34	207683-4	207684-2			
.025 0.64	.275 6.99	207683-8	207684-4	.000050–.000100 [0.00127–0.00254] thick gold plate over .000050–.000150 [0.00127–0.00381] thick nickel underplate		Passivated Stainless Steel
.018 0.46	.275 6.99	—	207684-5	.000050–.000100 [0.00127–0.00254] thick gold plate over .000050–.000150 [0.00127–0.00381] thick nickel underplate		Passivated Stainless Steel
	.525 13.34	207683-9	—			
	.175 4.45	1-207683-1	—	.000050–.000100 [0.00127–0.00254] thick gold plate over .000200–.000250 [0.00508–0.00635] thick nickel underplate		—

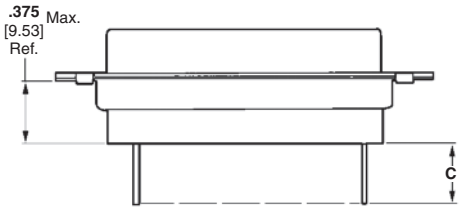

Post Extension When Used in a Standard Connector

Dimensions are shown for reference purposes only. Specifications subject to change.

Dimensions are in millimeters unless otherwise specified.

USA: +1 800 522 6752
Asia Pacific: +86 0 400 820 6015
UK: +44 800 267 666

For additional support numbers please visit www.te.com

AMPLIMITE Connectors, Series 90 (Continued)

Crimp Plugs, Series 90, High Density Connectors

(MIL Qualified)

Material and Finish

Shell — Steel, cadmium plated, yellow chromate

Insert — Approved material per MIL-DTL-24308

Retention Clips — Stainless steel or copper alloy

(Industrial Grade)

Material and Finish

Shell — Steel, zinc plated, yellow trivalent chromate or tin plated with grounding indents (not shown)

Insert — Polyphenylene Sulfide (PPS)

Retention Clips — Stainless steel or copper alloy

Related Product Data

Cavity Identification — page 8-69

Contacts — pages 8-70 and 8-71

Mounting, Mating Dimensions — page 8-90

Accessories — pages 8-95 to 8-97

Attention: MIL Qualified Connector Marking

Connector marking may differ from package marking. All connectors marked per MIL-DTL-24308.

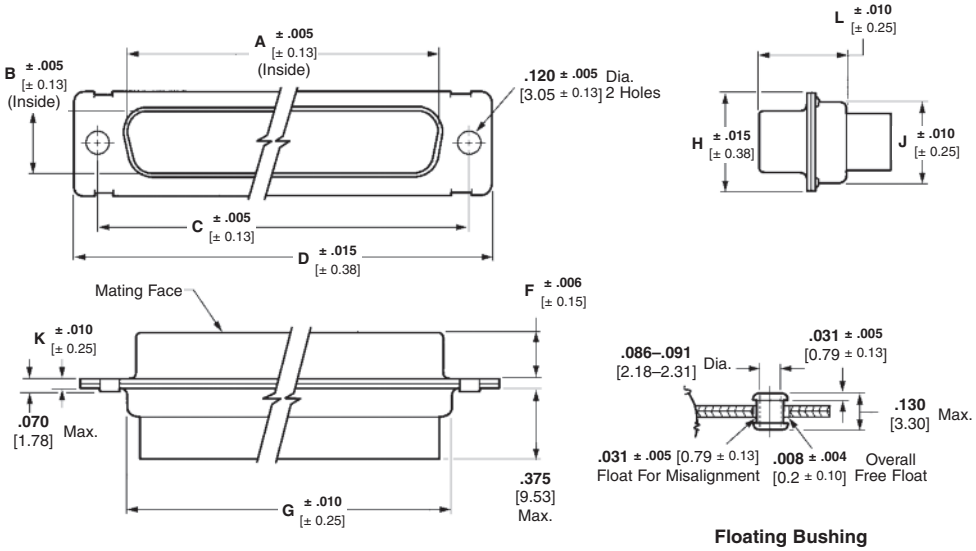

Floating Bushing Dual Mount

No. of Contact Pos. (Shell Size)	Dimensions A	B	C	D	F	G	H	J	K	L	MIL Qualified: Standard Mount Military Part No.[2] M24308/	Standard Mount AMP Part No.	Floating Bushing Mount Military Part No. M24308/	Floating Bushing Mount AMP Part No.	Description	Industrial Grade[3] Standard Mount RoHS Part No.
15 (1)	**.666** 16.92	**.329** 8.36	**.984** 24.99	**1.213** 30.81	**.235** 5.97	**.759** 19.28	**.494** 12.55	**.422** 10.72	**.030** 0.76	**.422** 10.72	4-264F	204501-1	4-329F	204525-1	Plug only	1218746-1[4] 204501-5[5]
											4-11F	204513-2	4-307F	204537-2	Plug with pins[1]	—
26 (2)	**.994** 25.25	**.329** 8.36	**1.312** 33.32	**1.541** 39.14	**.235** 5.97	**1.083** 27.51	**.494** 12.55	**.422** 10.72	**.030** 0.76	**.422** 10.72	4-265F	204503-1	4-330F	204527-1	Plug only	1218746-2[4] 204503-4[5]
											4-12F	204515-2	4-308F	204539-2	Plug with pins[1]	—
44 (3)	**1.534** 38.96	**.329** 8.36	**1.852** 47.04	**2.088** 53.04	**.230** 5.84	**1.625** 4.13	**.494** 12.55	**.422** 10.72	**.039** 0.99	**.426** 10.82	4-266F	204505-1	4-331F	204529-1	Plug only	1218746-3[4] 204505-5[5]
											4-13F	204517-2	4-309F	204541-2	Plug with pins[1]	—
62 (4)	**2.182** 55.42	**.329** 8.36	**2.500** 63.5	**2.729** 69.32	**.230** 5.84	**2.272** 57.7	**.494** 12.55	**.422** 10.72	**.039** 0.99	**.426** 10.82	4-267F	204507-1	4-332F	204531-1	Plug only	1218746-4[4] 204507-5[5]
											4-14F	204519-2	4-310F	204543-2	Plug with pins[1]	—
78 (5)	**2.079** 52.81	**.441** 11.2	**2.406** 61.11	**2.635** 66.93	**.230** 5.84	**2.178** 55.32	**.605** 15.37	**.534** 13.56	**.039** 0.99	**.426** 10.82	4-268F	204509-1	4-333F	204533-1	Plug only	1218746-5[4] 204509-7[5]
											4-15F	204521-2	4-311F	204545-2	Plug with pins[1]	—
104 (6)	**2.212** 56.18	**.503** 12.78	**2.500** 63.5	**2.729** 69.32	**.230** 5.84	**2.302** 58.47	**.668** 16.97	**.596** 15.14	**.039** 0.99	**.426** 10.82	4-269F	204511-1	4-334F	204535-1	Plug only	1218746-6[4]
											4-16F	204523-2	4-312F	204547-2	Plug with pins[1]	—

Notes: See pages 8-99 through 8-103 (military to AMP Part Number cross reference) for additional part numbers.

[1] Size 22 contacts supplied with connectors are loose piece.

[2] "F" is stamped on connectors following **M24308** part number as required. "F" designates cadmium shell plating.

[3] Meets requirements of MIL-DTL-24308.

[4] Zinc plated.

[5] Tin plated.

Catalog 1308940
Revised 9-14

www.te.com

Dimensions are shown for reference purposes only. Specifications subject to change.

Dimensions are in millimeters unless otherwise specified.

USA: +1 800 522 6752
Asia Pacific: +86 0 400 820 6015
UK: +44 800 267 666

For additional support numbers please visit www.te.com

AMPLIMITE Connectors, Series 90 (Continued)

Crimp Plugs, Series 90, High Density Connectors — Zinc Plated, RoHS Compliant

(MIL Qualified)

Material and Finish

Shell — Steel, zinc plated
Insert — Approved material per MIL-DTL-24308
Retention Clips — Stainless steel or copper alloy

(Industrial Grade)

Material and Finish

Shell — Steel, zinc plated
Insert — Polyphenylene Sulfide (PPS)
Retention Clips — Stainless steel or copper alloy

Related Product Data

Cavity Identification — page 8-69
Contacts — pages 8-70 and 8-71
Mounting, Mating Dimensions — page 8-90
Accessories — pages 8-95 to 8-97

Attention: MIL Qualified Connector Marking

Connector marking may differ from package marking. All connectors marked per MIL-DTL-24308.

RoHS Ready

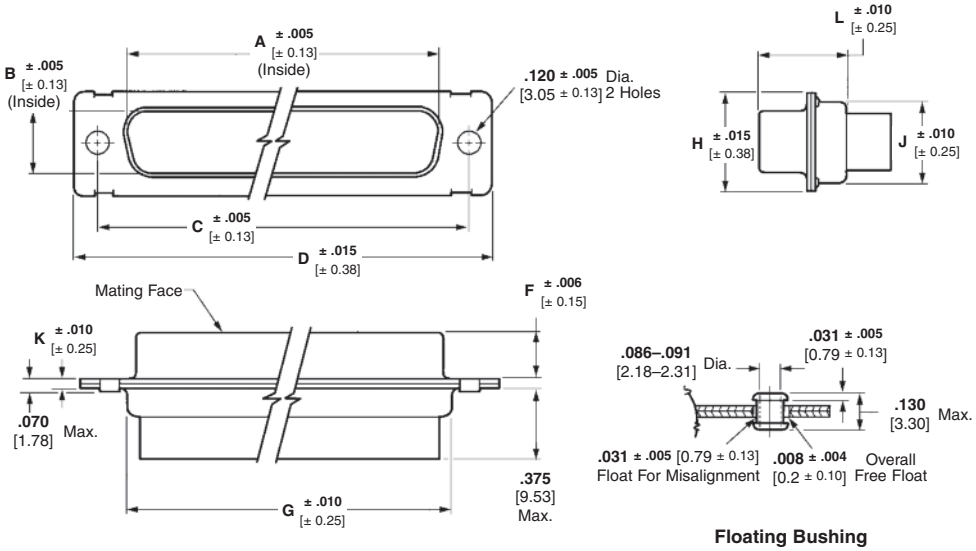

Floating Bushing Dual Mount

No. of Contact Pos. (Shell Size)	Dimensions A	B	C	D	F	G	H	J	K	L	MIL Qualified: Standard Mount, Military Part No. M24308/	Standard Mount, AMP Part No.	Floating Bushing Mount, Military Part No. M24308/	Floating Bushing Mount, AMP Part No.
15	**.666**	**.329**	**.984**	**1.213**	**.235**	**.759**	**.494**	**.422**	**.030**	**.422**	4-264	1757823-1	4-329	1757825-1
(1)	16.92	8.36	24.99	30.81	5.97	19.28	12.55	10.72	0.76	10.72	4-11	1757823-7	4-307	1757825-7
26	**.994**	**.329**	**1.312**	**1.541**	**.235**	**1.083**	**.494**	**.422**	**.030**	**.422**	4-265	1757823-2	4-330	1757825-2
(2)	25.25	8.36	33.32	39.14	5.97	27.51	12.55	10.72	0.76	10.72	4-12	1757823-8	4-308	1757825-8
44	**1.534**	**.329**	**1.852**	**2.088**	**.230**	**1.625**	**.494**	**.422**	**.039**	**.426**	4-266	1757823-3	4-331	1757825-3
(3)	38.96	8.36	47.04	53.04	5.84	4.13	12.55	10.72	0.99	10.82	4-13	1757823-9	4-309	1757825-9
62	**2.182**	**.329**	**2.500**	**2.729**	**.230**	**2.272**	**.494**	**.422**	**.039**	**.426**	4-267	1757823-4	4-332	1757825-4
(4)	55.42	8.36	63.5	69.32	5.84	57.7	12.55	10.72	0.99	10.82	4-14	1-1757823-0	4-310	1-1757825-0
78	**2.079**	**.441**	**2.406**	**2.635**	**.230**	**2.178**	**.605**	**.534**	**.039**	**.426**	4-268	1757823-5	4-333	1757825-5
(5)	52.81	11.2	61.11	66.93	5.84	55.32	15.37	13.56	0.99	10.82	4-15	1-1757823-1	4-311	1-1757825-1
104	**2.212**	**.503**	**2.500**	**2.729**	**.230**	**2.302**	**.668**	**.596**	**.039**	**.426**	4-269	1757823-6	4-334	1757825-6
(6)	56.18	12.78	63.5	69.32	5.84	58.47	16.97	15.14	0.99	10.82	4-16	1-1757823-2	4-312	1-1757825-2

Notes: See pages 8-99 through 8-103 (military to AMP Part Number cross reference) for additional part numbers.

Catalog 1308940
Revised 9-14
www.te.com

Dimensions are shown for reference purposes only. Specifications subject to change.

Dimensions are in millimeters unless otherwise specified.

USA: +1 800 522 6752
Asia Pacific: +86 0 400 820 6015
UK: +44 800 267 666

For additional support numbers please visit www.te.com

AMPLIMITE Connectors, Series 90 (Continued)

Crimp Receptacles, Series 90, High Density Connectors

(MIL Qualified)

Material and Finish

Shell — Steel, cadmium plated

Insert — Approved material per MIL-DTL-24308

Retention Clips — Stainless steel or copper alloy

(Industrial Grade)

Material and Finish

Shell — Steel, zinc plated, yellow trivalent chromate or tin plated

Insert — Polyphenylene Sulfide (PPS)

Retention Clips — Stainless steel or copper alloy

Related Product Data

Cavity Identification — page 8-69

Contacts — pages 8-70 and 8-71

Mounting, Mating Dimensions — page 8-90

Accessories — pages 8-95 to 8-97

Attention: Connector Marking

Connector marking may differ from package marking. All connectors marked per MIL-DTL-24308.

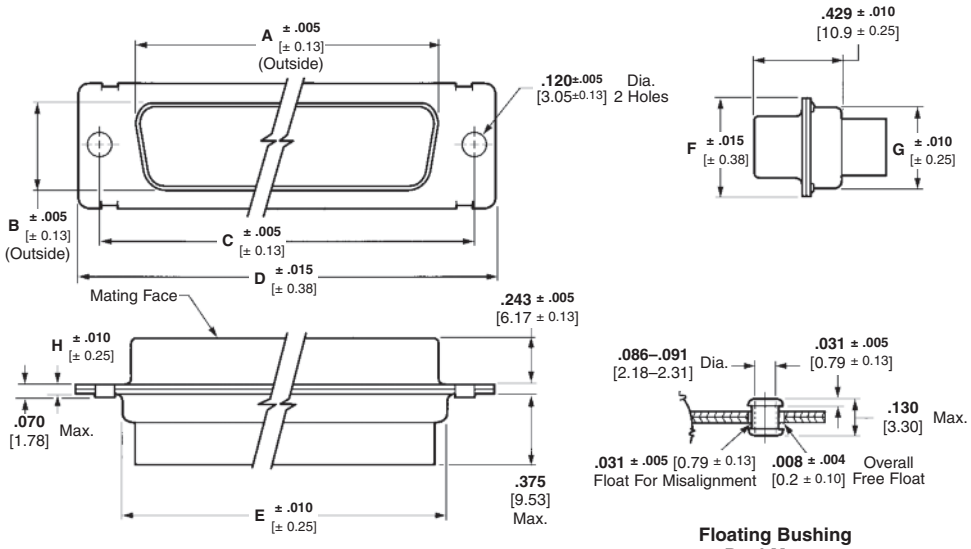

Floating Bushing Dual Mount

Clinch Nut Mount

No. of Contact Pos. (Shell Size)	Dimensions A	B	C	D	E	F	G	H	MIL Qualified: Standard Mount Military Part No.[2] M24308/	Standard Mount AMP Part No.	Floating Bushing Mount Military Part No. M24308/	Floating Bushing Mount AMP Part No.	Description	Industrial Grade[3] RoHS Part No.
15 (1)	**.643** 16.33	**.311** 7.9	**.984** 24.99	**1.213** 30.81	**.759** 19.28	**.494** 12.55	**.422** 10.72	**.030** 0.76	2-286F	204500-1	2-297F	204524-1	Recept. only	1218747-1[4] 204500-4[5]
									2-11F	204512-2	2-28F	204536-2	Recept. with sockets[1]	—
26 (2)	**.971** 24.66	**.311** 7.9	**1.312** 33.32	**1.541** 39.14	**1.083** 27.51	**.494** 12.55	**.422** 10.72	**.030** 0.76	2-287F	204502-1	2-298F	204526-1	Recept. only	1218747-2[4] 204502-4[5]
									2-12F	204514-2	2-29F	204538-2	Recept. with sockets[1]	—
44 (3)	**1.511** 38.38	**.311** 7.9	**1.852** 47.04	**2.088** 53.04	**1.625** 41.3	**.494** 12.55	**.422** 10.72	**.039** 0.99	2-288F	204504-1	2-299F	204528-1	Recept. only	1218747-3[4] 204504-5[5]
									2-13F	204516-2	2-30F	204540-2	Recept. with sockets[1]	—
62 (4)	**2.159** 54.84	**.311** 8.36	**2.500** 63.5	**2.729** 69.32	**2.272** 57.7	**494** 12.55	**.422** 10.72	**.039** 0.99	2-289F	204506-1	2-300F	204530-1	Recept. only	1218747-4[4]
									2-14F	204518-2	2-31F	204542-2	Recept. with sockets[1]	—
78 (5)	**2.064** 52.43	**.423** 10.74	**2.406** 61.11	**2.635** 66.93	**2.178** 55.32	**.605** 15.37	**.534** 13.56	**.039** 0.99	2-290F	204508-1	2-301F	204532-1	Recept. only	1218747-5[4]
									2-15F	204520-2	2-32F	204544-2	Recept. with sockets[1]	—
104 (6)	**2.189** 55.6	**.485** 12.32	**2.500** 63.5	**2.729** 69.32	**2.302** 58.47	**.668** 16.97	**.596** 15.14	**.039** 0.99	2-291F	204510-1	2-302F	204534-1	Recept. only	1218747-6[4]
									2-16F	204522-2	2-33F	204546-2	Recept. with sockets[1]	—

Notes: See pages 8-99 through 8-103 (military to AMP Part Number cross reference) for additional part numbers.

[1] Size 22 contacts supplied with connectors are loose piece.

[2] "F" is stamped on connectors following **M24308** part number as required. "F" designates cadmium shell plating.

[3] Meets requirements of MIL-DTL-24308.

[4] Clinch Nut Mount, Zinc plated.

[5] Standard Mount, Tin plated.

Dimensions are shown for reference purposes only. Specifications subject to change.

Dimensions are in millimeters unless otherwise specified.

USA: +1 800 522 6752
Asia Pacific: +86 0 400 820 6015
UK: +44 800 267 666

For additional support numbers please visit www.te.com

AMPLIMITE Connectors, Series 90 (Continued)

Crimp Receptacles, Series 90, High Density Connectors — Zinc Plated, RoHS Compliant

(MIL Qualified)

Material and Finish

Shell — Steel, zinc plated

Insert — Approved material per MIL-DTL-24308

Retention Clips — Stainless steel or copper alloy

(Industrial Grade)

Material and Finish

Shell — Steel, zinc plated

Insert — Polyphenylene Sulfide (PPS)

Retention Clips — Stainless steel or copper alloy

Related Product Data

Cavity Identification — page 8-69

Contacts — pages 8-70 and 8-71

Mounting, Mating Dimensions — page 8-90

Accessories — pages 8-95 to 8-97

Attention: Connector Marking

Connector marking may differ from package marking. All connectors marked per MIL-DTL-24308.

RoHS Ready

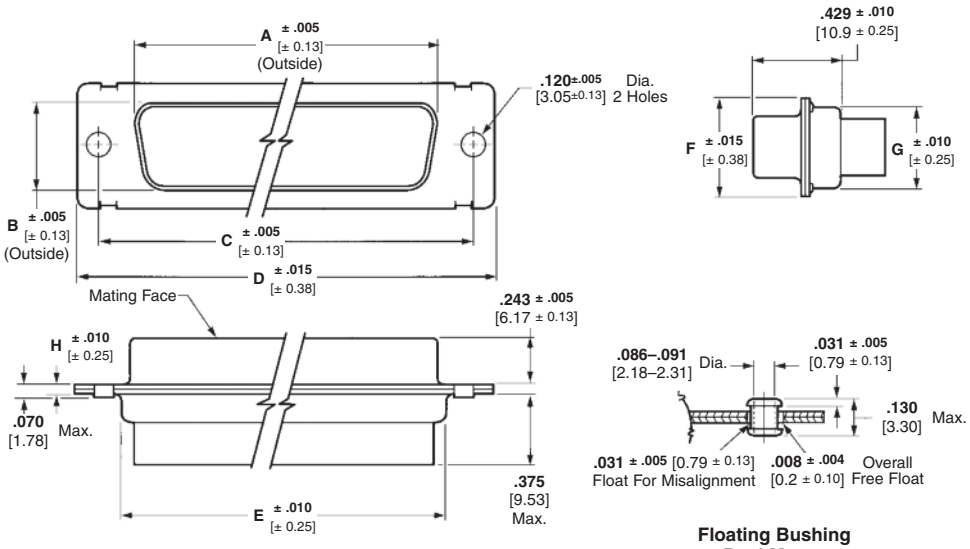

Floating Bushing Dual Mount

Clinch Nut Mount

No. of Contact Pos. (Shell Size)	Dimensions A	B	C	D	E	F	G	H	MIL Qualified: Standard Mount Military Part No. M24308/	Standard Mount AMP Part No.	Floating Bushing Mount Military Part No. M24308/	Floating Bushing Mount AMP Part No.	Description
15 (1)	**.643** 16.33	**.311** 7.9	**.984** 24.99	**1.213** 30.81	**.759** 19.28	**.494** 12.55	**.422** 10.72	**.030** 0.76	2-286	1757824-1	2-297	1757826-1	Recept. only
									2-11	1757824-7	2-28	1757826-7	Recept. with sockets[1]
26 (2)	**.971** 24.66	**.311** 7.9	**1.312** 33.32	**1.541** 39.14	**1.083** 27.51	**.494** 12.55	**.422** 10.72	**.030** 0.76	2-287	1757824-2	2-298	1757826-2	Recept. only
									2-12	1757824-8	2-29	1757826-8	Recept. with sockets[1]
44 (3)	**1.511** 38.38	**.311** 7.9	**1.852** 47.04	**2.088** 53.04	**1.625** 41.3	**.494** 12.55	**.422** 10.72	**.039** 0.99	2-288	1757824-3	2-299	1757826-3	Recept. only
									2-13	1757824-9	2-30	1757826-9	Recept. with sockets[1]
62 (4)	**2.159** 54.84	**.311** 8.36	**2.500** 63.5	**2.729** 69.32	**2.272** 57.7	**494** 12.55	**.422** 10.72	**.039** 0.99	2-289	1757824-4	2-300	1757826-4	Recept. only
									2-14	1-1757824-0	2-31	1-1757826-0	Recept. with sockets[1]
78 (5)	**2.064** 52.43	**.423** 10.74	**2.406** 61.11	**2.635** 66.93	**2.178** 55.32	**.605** 15.37	**.534** 13.56	**.039** 0.99	2-290	1757824-5	2-301	1757826-5	Recept. only
									2-15	1-1757824-1	2-32	1-1757826-1	Recept. with sockets[1]
104 (6)	**2.189** 55.6	**.485** 12.32	**2.500** 63.5	**2.729** 69.32	**2.302** 58.47	**.668** 16.97	**.596** 15.14	**.039** 0.99	2-291	1757824-6	2-302	1757826-6	Recept. only
									2-16	1-1757824-2	2-33	1-1757826-2	Recept. with sockets[1]

Notes: See pages 8-99 through 8-103 (military to AMP Part Number cross reference) for additional part numbers.

Catalog 1308940
Revised 9-14

www.te.com

Dimensions are shown for reference purposes only. Specifications subject to change.

Dimensions are in millimeters unless otherwise specified.

USA: +1 800 522 6752
Asia Pacific: +86 0 400 820 6015
UK: +44 800 267 666

For additional support numbers please visit www.te.com

AMPLIMITE Connectors, Series 90 (Continued)

Non-Magnetic Crimp Plugs, Series 90, High Density Connectors (NASA Qualified)

Connector Material and Finish

Shell — Brass, gold plated

Insert — Approved material per MIL-DTL-24308

Retention Clips — Copper alloy

Related Product Data

Cavity Identification — page 8-69

Mounting, Mating Specifications — page 8-90

Accessories — pages 8-95 to 8-97

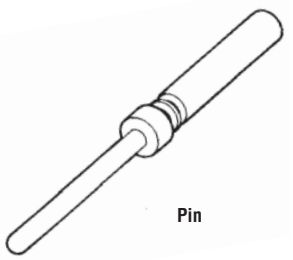

Wire Size Range	AMP Part No. / NASA No.
22-28 0.4-0.08	204370-8 G-08-P1
26-28 0.15-0.08	206495-3 —

Max. insulation diameter .054 [1.38]

Hand tool AMP Part Number 601966-1 or MIL Part Number M22520/2-01

Positioner AMP Part Number 601966-6 or MIL Part Number M22520/2-09

Contact Material and Finish

Copper alloy, .000050–.000100 [0.00127–0.0254] thick gold plate over .000100–.000150 [0.0254–0.00381] thick copper underplate

Pin and Socket Insertion/Extraction Tool

AMP Part Number 91067-1 or MIL Part Number M81969/1-04

Insertion tip, for replacement Part Number 126237-1

Extraction tip, for replacement Part Number 126195-2

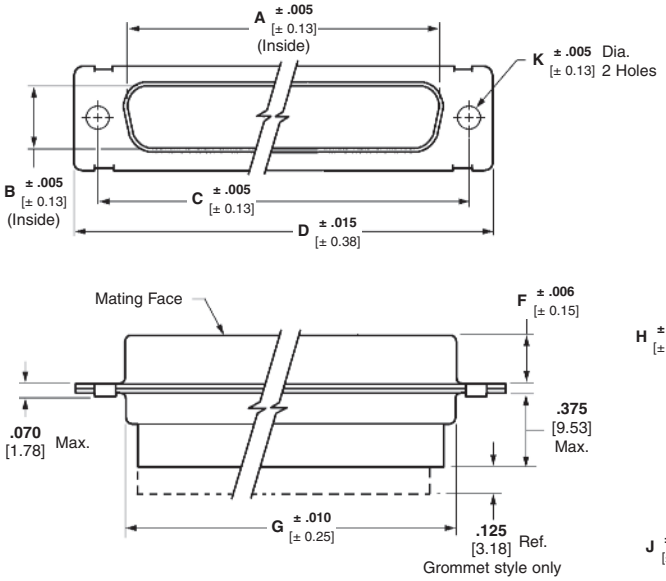

Non-Magnetic Plugs per NASA Specification

No. of Contact Pos. (Shell Size)	Dimensions A	B	C	D	F	G	H	J	L	K	NASA Part Number	AMP Part Number
15 (1)	**.666** 16.92	**.329** 8.36	**.984** 24.99	**1.213** 30.81	**.235** 5.97	**.759** 19.28	**.494** 12.55	**.422** 10.72	**.422** 10.72	**.154** 3.91	311P407-1P-B-15	206498-1
										.120 3.05	311P407-1P-B-12	206498-4
26 (2)	**.994** 25.25	**.329** 8.36	**1.312** 33.32	**1.541** 39.14	**.235** 5.97	**1.083** 27.51	**.494** 12.55	**.422** 10.72	**.422** 10.72	**.154** 3.91	311P407-2P-B-15	206500-1
										.120 3.05	311P407-2P-B-12	206500-4
44 (3)	**1.534** 38.96	**.329** 8.36	**1.852** 47.04	**2.088** 53.04	**.230** 5.84	**1.625** 4.13	**.494** 12.55	**.422** 10.72	**.426** 10.82	**.154** 3.91	311P407-3P-B-15	206063-2
										.120 3.05	311P407-3P-B-12	206063-4
62 (4)	**2.182** 55.42	**.329** 8.36	**2.500** 63.5	**2.729** 69.32	**.230** 5.84	**2.272** 57.7	**.494** 12.55	**.422** 10.72	**.426** 10.82	**.154** 3.91	311P407-4P-B-15	206502-1
										.120 3.05	311P407-4P-B-12	206502-4
78 (5)	**2.079** 52.81	**.441** 11.20	**2.406** 61.11	**2.635** 66.93	**.230** 5.84	**2.178** 57.7	**.605** 15.37	**.534** 13.56	**.426** 10.82	**.154** 3.91	311P407-5P-B-15	206504-1
										.120 3.05	311P407-5P-B-12	206504-4
104 (6)	**2.212** 56.18	**.503** 12.78	**2.500** 63.5	**2.729** 69.32	**.230** 5.84	**2.302** 58.47	**.668** 16.97	**.596** 15.14	**.426** 10.82	**.154** 3.91	311P407-6P-B-15	206066-2
										.120 3.05	311P407-6P-B-12	206066-4

Non-Magnetic Plugs With Silicone Rubber Rear Grommet[1]

No. of Contact Pos. (Shell Size)	Dimensions A	B	C	D	F	G	H	J	K	L	AMP Part Number
15 (1)	**.666** 16.92	**.329** 8.36	**.984** 24.99	**1.213** 30.81	**.235** 5.97	**.759** 19.28	**.494** 12.55	**.422** 10.72	**.120** 3.05	**.422** 10.72	211673-4
26 (2)	**.994** 25.25	**.329** 8.36	**1.312** 33.32	**1.541** 39.14	**.235** 5.97	**1.083** 27.51	**.494** 12.55	**.422** 10.72	**.120** 3.05	**.422** 10.72	211674-4
44 (3)	**1.534** 38.96	**.329** 8.36	**1.852** 47.04	**2.088** 53.04	**.230** 5.84	**1.625** 41.3	**.494** 12.55	**.422** 10.72	**.120** 3.05	**.426** 10.82	211675-4
62 (4)	**2.182** 55.42	**.329** 8.36	**2.500** 63.5	**2.729** 69.32	**.230** 5.84	**2.272** 57.7	**.494** 12.55	**.422** 10.72	**.120** 3.05	**.426** 10.82	211676-4
78 (5)	**2.079** 52.81	**.441** 11.20	**2.406** 61.11	**2.635** 66.93	**.230** 5.84	**2.178** 55.32	**.605** 15.37	**.534** 13.56	**.120** 3.05	**.426** 10.82	211677-4
104 (6)	**2.212** 56.18	**.503** 12.78	**2.500** 63.5	**2.729** 69.32	**.230** 5.84	**2.302** 58.47	**.668** 16.97	**.596** 15.14	**.120** 3.05	**.426** 10.82	211678-4

[1] Grommet provided for cable strain relief.

Dimensions are shown for reference purposes only. Specifications subject to change.

Dimensions are in millimeters unless otherwise specified.

USA: +1 800 522 6752
Asia Pacific: +86 0 400 820 6015
UK: +44 800 267 666

For additional support numbers please visit www.te.com

AMPLIMITE Connectors, Series 90 (Continued)

Non-Magnetic Crimp Receptacles, Series 90, High Density Connectors (NASA Qualified)

Connector Material and Finish

Shell — Brass, gold plated

Insert — Approved material per MIL-DTL-24308

Retention Clips — Copper alloy

Related Product Data

Cavity Identification — page 8-69

Mounting, Mating Specifications — page 8-90

Accessories — pages 8-95 to 8-97

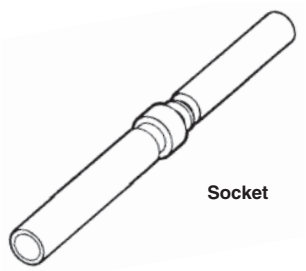

Wire Size Range	AMP Part No. / NASA No.
22-28 0.4-0.08	206071-1 G-08-S1
26-28 0.15-0.08	206496-1 —

Max. insulation diameter .054 [1.38]

Hand tool AMP Part Number 601966-1 or MIL Part Number M22520/2-01

Positioner AMP Part Number 601966-4 or MIL Part Number M22520/2-06

Contact and Hood Material and Finish

Copper alloy, .000050–.000100 [0.00127–0.0254] thick gold plate over .000100–.000150 [0.0254–0.00381] thick copper underplate

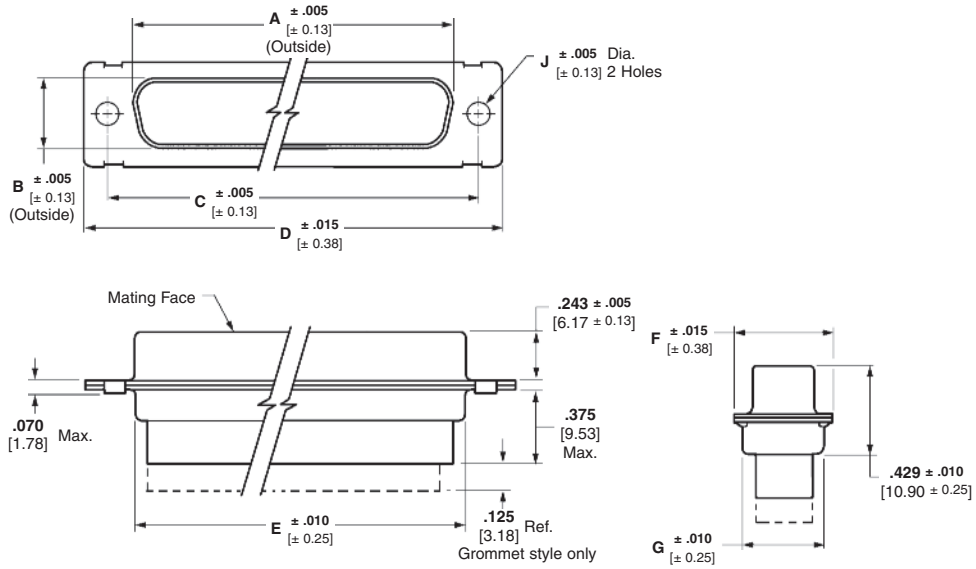

Non-Magnetic Receptacles per NASA Specification

No. of Contact Pos. (Shell Size)	Dimensions A	B	C	D	E	F	G	J	NASA Part Number	AMP Part Number
15 (1)	**.643** 16.33	**.311** 7.9	**.984** 24.99	**1.213** 30.81	**.759** 19.28	**.494** 12.55	**.422** 10.72	**.154** 3.91	311P407-1S-B-15	206499-1
								.120 3.05	311P407-1S-B-12	206499-4
26 (2)	**.971** 24.66	**.311** 7.9	**1.312** 33.32	**1.541** 39.14	**1.083** 27.51	**.494** 12.55	**.422** 10.72	**.154** 3.91	311P407-2S-B-15	206501-1
								.120 3.05	311P407-2S-B-12	206501-4
44 (3)	**1.511** 38.38	**.311** 7.9	**1.852** 47.04	**2.088** 53.04	**1.625** 41.3	**.494** 12.55	**.422** 10.72	**.154** 3.91	311P407-3S-B-15	206064-2
								.120 3.05	311P407-3S-B-12	206064-4
62 (4)	**2.159** 54.84	**.311** 7.9	**2.500** 63.5	**2.729** 69.32	**2.272** 57.7	**.494** 12.55	**.422** 10.72	**.154** 3.91	311P407-4S-B-15	206503-1
								.120 3.05	311P407-4S-B-12	206503-4
78 (5)	**2.064** 52.43	**.423** 10.74	**2.406** 61.11	**2.635** 66.93	**2.178** 55.32	**.605** 15.37	**.534** 13.56	**.154** 3.91	311P407-5S-B-15	206505-1
								.120 3.05	311P407-5S-B-12	206505-4
104 (6)	**2.189** 55.6	**.485** 12.32	**2.500** 63.5	**2.729** 69.32	**2.302** 58.47	**668** 16.97	**.596** 15.14	**.154** 3.91	311P407-6S-B-15	206065-2
								.120 3.05	311P407-6S-B-12	206065-4

Pin and Socket Insertion/Extraction Tool

AMP Part Number 91067-1 or MIL Part Number M81969/1-04

Insertion tip, for replacement Part Number 126237-1

Extraction tip, for replacement Part Number 126195-2

Non-Magnetic Receptacles With Silicone Rubber Rear Grommet[1]

No. of Contact Pos. (Shell Size)	Dimensions A	B	C	D	E	F	G	J	AMP Part Number
15 (1)	**.643** 16.33	**.311** 7.9	**.984** 24.99	**1.213** 30.81	**.759** 19.28	**.494** 12.55	**.422** 10.72	**.120** 3.05	211667-4
26 (2)	**.971** 24.66	**.311** 7.9	**1.312** 33.32	**1.541** 39.14	**1.083** 27.51	**.494** 12.55	**.422** 10.72	**.120** 3.05	211668-4
44 (3)	**1.511** 38.38	**.311** 7.9	**1.852** 47.04	**2.088** 53.04	**1.625** 41.3	**.494** 12.55	**.422** 10.72	**.120** 3.05	211669-4
62 (4)	**2.159** 54.84	**.311** 7.9	**2.500** 63.5	**2.729** 69.32	**2.272** 57.7	**.494** 12.55	**.422** 10.72	**.120** 3.05	211670-4
78 (5)	**2.064** 52.43	**.423** 10.74	**2.406** 61.11	**2.635** 66.93	**2.178** 55.32	**.605** 15.37	**.534** 13.56	**.120** 3.05	211671-4
104 (6)	**2.189** 55.6	**.485** 12.32	**2.500** 63.5	**2.729** 69.32	**2.302** 58.47	**.668** 16.97	**.596** 15.14	**.120** 3.05	211672-4

[1] Grommet provided for cable strain relief.

Dimensions are shown for reference purposes only. Specifications subject to change.

Dimensions are in millimeters unless otherwise specified.

USA: +1 800 522 6752
Asia Pacific: +86 0 400 820 6015
UK: +44 800 267 666

For additional support numbers please visit www.te.com

AMPLIMITE Connectors, Series 90 (Continued)

Crimp Blindmate Plugs, Series 90, High Density Connectors

Material and Finish

Shell, Front — Aluminum alloy, cadmium plated with yellow chromate

[1] **Shell, Front for RoHS Compliant** — Aluminum alloy, zinc plated with yellow trivalent chromate

Shell, Rear — Steel, cadmium plated with yellow chromate

[1] **Shell, Rear for RoHS Compliant** — Steel, zinc plated with yellow trivalent chromate

Insert Assembly — Approved material per MIL-DTL-24308

Retention Clips — Stainless steel

Related Product Data

Cavity Identification — page 8-69

Contacts — pages 8-70 and 8-71

Mounting Specifications — page 8-90

Flange to flange spacing can be a max. of .270 [6.86] for Blindmate connectors.

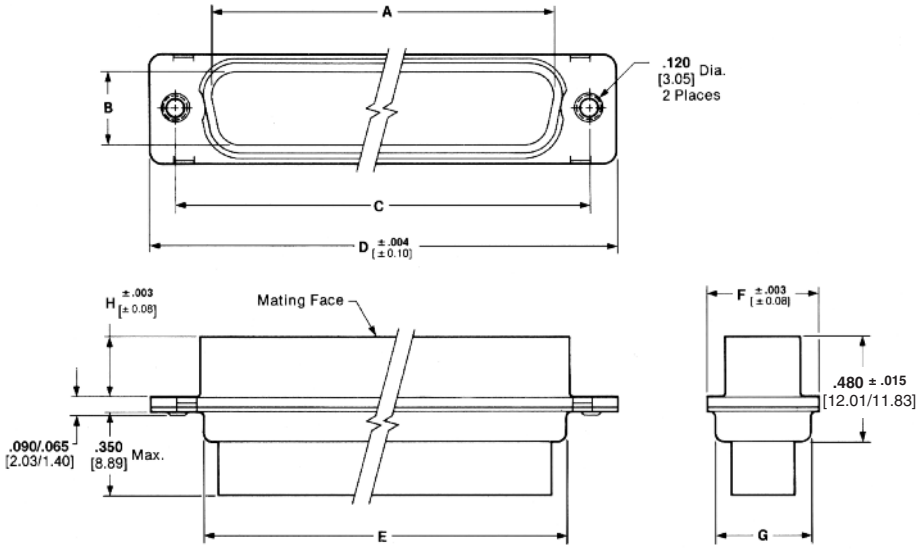

No. of Contact Pos. (Shell Size)	Dimensions A	B	C	D	E	F	G	H	Part Number
15 (1)	**.656** 16.66	**.324** 8.23	**.984** 24.99	**1.224** 31.09	**.769/.750** 19.53/19.05	**.506** 12.85	**.432/.413** 10.97/10.49	**.257** 6.53	213153-1
26 (2)	**.984** 25.0	**.324** 8.23	**1.312** 33.32	**1.552** 39.42	**1.093/1.074** 27.76/27.28	**.506** 12.85	**.432/.413** 10.97/10.49	**.257** 6.53	445010-1
44 (3)	**1.524** 38.71	**.324** 8.23	**1.852** 47.04	**2.099** 53.31	**1.635/1.616** 41.53/41.05	**.506** 12.85	**.432/.413** 10.97/10.49	**.257** 6.53	445011-1 5-445011-1[1]
62 (4)	**2.172** 55.17	**.324** 8.23	**2.500** 63.5	**2.740** 69.6	**2.282/2.263** 57.96/57.48	**.506** 12.85	**.432/.413** 10.97/10.49	**.257** 6.53	213118-1
78 (5)	**2.082** 52.88	**.444** 11.28	**2.406** 61.11	**2.646** 67.21	**2.188/2.167** 55.58/55.04	**.617** 15.67	**.544/.525** 13.82/13.34	**.257** 6.53	445012-1 5-445012-1[1]
104 (6)	**2.212** 56.18	**.503** 12.78	**2.500** 63.5	**2.740** 69.6	**2.302** 58.47	**.680** 17.27	**.606/.587** 15.39/14.91	**.267** 6.78	212933-3

[1] See Material and Finish for RoHS compliant Part Numbers above.

Blindmate Plugs with Floating Bushings

Material and Finish

Shell — Aluminum alloy per 6061, cadmium plated per QQ-P-416, Type II, Class 2 over copper per MIL-C-14550, Class 4.

Insert Assembly — Diallyl phthalate per MIL-M-14, Type SDG-F; or polyester per MIL-M-24519, Type GPT-30F; or polyphenylene sulfide (PPS) per MIL-M-24519, Type GST-40F.

Floating Bushing/Washer — Stainless steel per ASTM-A-582, passivated per QQ-P-35B. Floats .008 ± .004 [0.20 ± 0.10] vertically and .031 [0.79] horizontally.

Related Product Data

Cavity Identification — page 8-69

Contacts — pages 8-70 and 8-71

Mounting Specifications — page 8-90

Flange to flange spacing can be a max. of .270 [6.86] for Blindmate connectors.

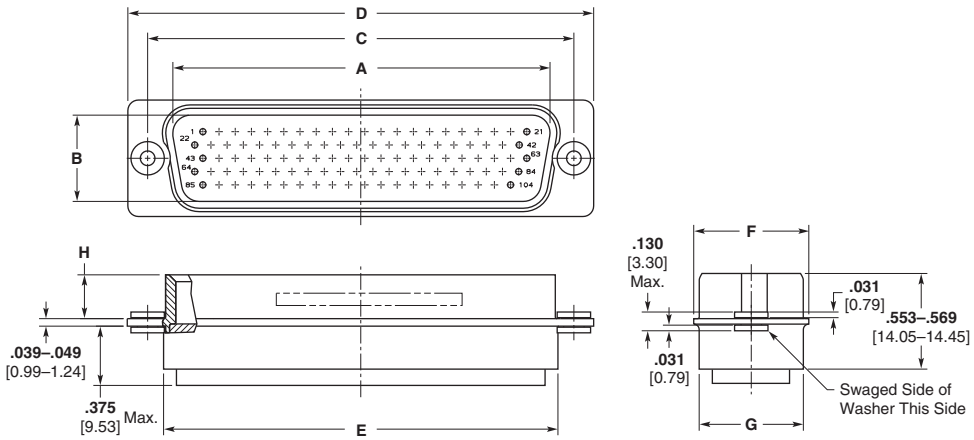

No. of Contact Pos. (Shell Size)	Dimensions A	B	C	D	E	F	G	H	Part Number
104 (6)	**2.213/2.217** 56.21/56.31	**.504/.508** 12.80/12.90	**2.495/2.505** 63.37/63.63	**2.714/2.744** 68.94/69.70	**2.307/2.319** 58.60/58.90	**.673/.683** 17.09/17.35	**.602/.614** 15.29/15.59	**.254/.260** 6.45/6.60	1757207-6
44 (3)	**1.522/1.526** 38.66/38.76	**.321/.327** 8.15/8.31	**1.847/1.857** 46.91/47.17	**2.073/2.103** 52.65/53.42	**1.630/1.642** 41.40/41.71	**.499/.509** 12.67/12.93	**.432/.444** 10.97/11.28	**.254/.260** 6.45/6.60	1757207-3

Note: Additional sizes available upon request.

Dimensions are shown for reference purposes only. Specifications subject to change.

Dimensions are in millimeters unless otherwise specified.

USA: +1 800 522 6752
Asia Pacific: +86 0 400 820 6015
UK: +44 800 267 666

For additional support numbers please visit www.te.com

AMPLIMITE Connectors, Series 90 (Continued)

Straight PCB, Series 90, High Density Connectors (Industrial Grade)

Material and Finish

[1] **Shell** — Steel, cadmium plated
[2] **Shell for RoHS Compliant** — Steel, zinc plated
Insert — Polyphenylene Sulfide (PPS)
Retention Clips — Stainless steel

Related Product Data

Cavity Identification — page 8-69
Contacts — page 8-71
Mounting, Mating Dimensions — page 8-90
Accessories — pages 8-95 to 8-97
PCB Layouts — See page 8-92 or TE Connectivity customer drawing

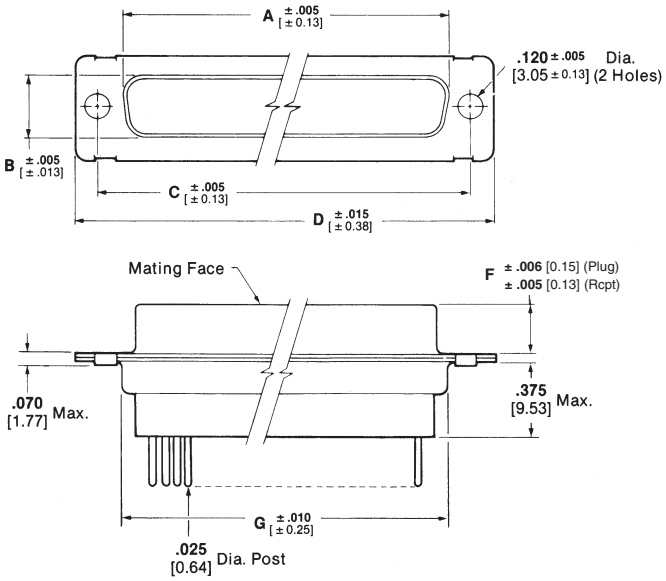

Replacement Pin Contact Part Number 207683-8

Plugs

No. of Contact Pos. (Shell Size)	Dimensions A (Inside)	B (Inside)	C	D	F	G	H	J	K	Part Number
15 (1)	**.666** 16.92	**.329** 8.36	**.984** 24.99	**1.213** 30.81	**.235** 5.97	**.759** 19.28	**.494** 12.55	**.422** 10.72	**.422** 10.72	208866-1[1] 5-208866-1[2]
26 (2)	**.994** 25.25	**.329** 8.36	**1.312** 33.32	**1.541** 39.14	**.235** 5.97	**1.083** 27.51	**.494** 12.55	**.422** 10.72	**.422** 10.72	208867-1[1] 5-208867-1[2]
44 (3)	**1.534** 38.96	**.329** 8.36	**1.852** 47.04	**2.088** 53.04	**.230** 5.84	**1.625** 41.3	**.494** 12.55	**.422** 10.72	**.426** 10.82	208868-1[1] 5-208868-1[2]
62 (4)	**2.182** 55.42	**.329** 8.36	**2.500** 63.5	**2.729** 69.32	**.230** 5.84	**2.272** 57.7	**.494** 12.55	**.422** 10.72	**.426** 10.82	208869-1[1] 5-208869-1[2]
78 (5)	**2.079** 52.81	**.441** 11.20	**2.406** 61.11	**2.635** 66.93	**.230** 5.84	**2.178** 55.32	**.605** 15.37	**.534** 13.56	**.426** 10.82	208870-1[1] 5-208870-1[2]
104 (6)	**2.212** 56.18	**.503** 12.78	**2.500** 63.5	**2.729** 69.32	**.230** 5.84	**2.302** 58.47	**.668** 16.97	**.596** 15.14	**.426** 10.82	208871-1[1] 5-208871-1[2]

[1] See Material and Finish above.
[2] See Material and Finish for RoHS compliant Part Numbers above.

Replacement Socket Contact Part Number 207684-4

Receptacles

No. of Contact Pos. (Shell Size)	Dimensions A (Outside)	B (Outside)	C	D	F	G	H	J	K	Part Number
15 (1)	**.643** 16.33	**.311** 7.9	**.984** 24.99	**1.213** 30.81	**.243** 6.17	**.759** 19.28	**.494** 12.55	**.422** 10.72	**.429** 10.9	208872-1[1] 5-208872-1[2]
26 (2)	**.971** 24.66	**.311** 7.9	**1.312** 33.32	**1.541** 39.14	**.243** 6.17	**1.083** 27.51	**.494** 12.55	**.422** 10.72	**.429** 10.9	208873-1[1] 5-208873-1[2]
44 (3)	**1.511** 38.38	**.311** 7.9	**1.852** 47.04	**2.088** 53.04	**.243** 6.17	**1.625** 41.3	**.494** 12.55	**.422** 10.72	**.429** 10.9	208874-1[1] 5-208874-1[2]
62 (4)	**2.159** 54.84	**.311** 7.9	**2.500** 63.5	**2.729** 69.32	**.243** 6.17	**2.272** 57.7	**.494** 12.55	**.422** 10.72	**.429** 10.9	208875-1[1] 5-208875-1[2]
78 (5)	**2.064** 52.43	**.423** 10.74	**2.406** 61.11	**2.635** 66.93	**.243** 6.17	**2.178** 55.32	**.605** 15.37	**.534** 13.56	**.429** 10.9	208876-1[1] 5-208876-1[2]
104 (6)	**2.189** 55.6	**.485** 12.32	**2.500** 63.5	**2.729** 69.32	**.243** 6.17	**2.302** 58.47	**.668** 16.97	**.596** 15.14	**.429** 10.9	208877-1[1] 5-208877-1[2]

[1] See Material and Finish above.
[2] See Material and Finish for RoHS compliant Part Numbers above.

Dimensions are shown for reference purposes only. Specifications subject to change.

Dimensions are in millimeters unless otherwise specified.

USA: +1 800 522 6752
Asia Pacific: +86 0 400 820 6015
UK: +44 800 267 666

For additional support numbers please visit www.te.com

AMPLIMITE Connectors, Series 90 (Continued)

Right-Angle PCB, Series 90, with Female Screwlocks

Material and Finish

Shell — Brass, gold over copper plated

Insert — Diallyl phthalate or polyester or Polyphenylene Sulfide (PPS)

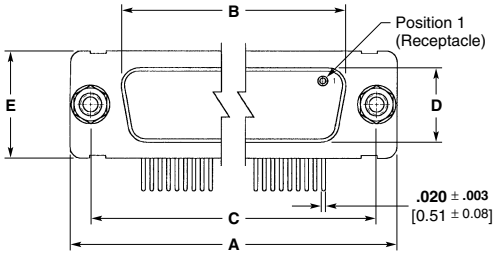

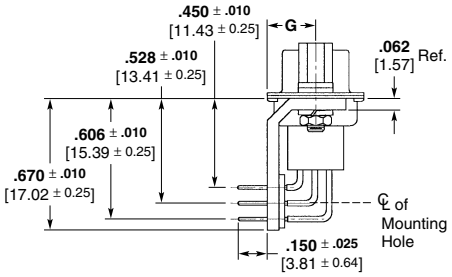

Shell Size 1 thru 4

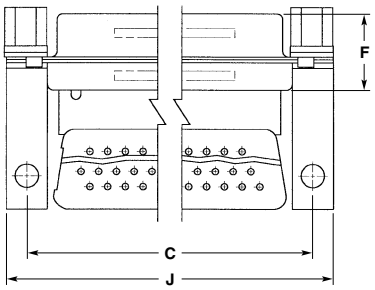

Plugs

No. of Contact Pos. (Shell Size)	Dimensions A	B	C	D	E	F	G	J	Part Number
15 (1)	**1.213** 30.81	**.666** 16.92	**.984** 24.99	**.329** 8.36	**.494** 12.55	**.422** 10.72	**.246** ±.010 6.25 ± 0.25	**1.204** 30.58	1-593326-7
26 (2)	**1.541** 39.14	**.994** 25.25	**1.312** 33.32	**.329** 8.36	**.494** 12.55	**.422** 10.72	**.246** ±.010 6.25 ± 0.25	**1.532** 38.91	1-593326-8
44 (3)	**2.088** 53.04	**1.534** 38.96	**1.852** 47.04	**.329** 8.36	**.494** 12.55	**.426** 10.82	**.246** ±.010 6.25 ± 0.25	**2.077** 52.76	1-593326-9
62 (4)	**2.729** 69.32	**2.182** 55.42	**2.500** 63.50	**.329** 8.36	**.494** 12.55	**.426** 10.82	**.246** ±.010 6.25 ± 0.25	**2.720** 69.09	2-593326-0
78 (5)	**2.635** 66.93	**2.079** 52.81	**2.406** 61.11	**.441** 11.20	**.605** 15.37	**.426** 10.82	**.246** ±.010 6.25 ± 0.25	**2.626** 66.70	2-593326-1
104 (6)	**2.729** 69.32	**2.213** 56.21	**2.500** 63.50	**.503** 12.78	**.668** 16.97	**.426** 10.82	**.246** ±.010 6.25 ± 0.25	**2.720** 69.09	2-593326-2

Receptacles

No. of Contact Pos. (Shell Size)	Dimensions A	B	C	D	E	F	G	J	Part Number
15 (1)	**1.213** 30.81	**.643** 16.33	**.984** 24.99	**.311** 7.90	**.494** 12.55	**.422** 10.72	**.248** ±.010 6.30 ± 0.25	**1.204** 30.58	1-593327-7
26 (2)	**1.541** 39.14	**.971** 24.66	**1.312** 33.32	**.311** 7.90	**.494** 12.55	**.422** 10.72	**.248** ±.010 6.30 ± 0.25	**1.532** 38.91	1-593327-8
44 (3)	**2.088** 53.04	**1.511** 38.38	**1.852** 47.04	**.311** 7.90	**.494** 12.55	**.426** 10.82	**.248** ±.010 6.30 ± 0.25	**2.077** 52.76	1-593327-9
62 (4)	**2.729** 69.32	**2.159** 54.84	**2.500** 63.50	**.311** 7.90	**.494** 12.55	**.426** 10.82	**.248** ±.010 6.30 ± 0.25	**2.720** 69.09	2-593327-0
78 (5)	**2.635** 66.93	**2.064** 52.43	**2.406** 61.11	**.423** 10.74	**.605** 15.37	**.426** 10.82	**.248** ±.010 6.30 ± 0.25	**2.626** 66.70	2-593327-1
104 (6)	**2.729** 69.32	**2.188** 55.58	**2.500** 63.50	**.485** 12.32	**.668** 16.97	**.426** 10.82	**.248** ±.010 6.30 ± 0.25	**2.726** 69.24	2-593327-2

Dimensions are shown for reference purposes only. Specifications subject to change.

Dimensions are in millimeters unless otherwise specified.

USA: +1 800 522 6752
Asia Pacific: +86 0 400 820 6015
UK: +44 800 267 666

For additional support numbers please visit www.te.com

AMPLIMITE Connectors, Series 90 (Continued)

Connector Savers, Series 90, High Density Connectors

Connector savers prolong the life of permanently installed connectors which would otherwise be subjected to repeated cycles of mating and unmating, in applications such as test interfaces or on testing devices.

Material and Finish

Standard

Shell — Steel, cadmium plated

Contact Body — Beryllium copper, .000050 [0.00127] min. gold plate over .000050 [0.00127] min. nickel underplate

Socket Hood — Passivated stainless steel

Insert — Polyphenylene Sulfide (PPS)

Spacer — Black nylon

Non Magnetic

Shell — Brass, gold plated

Contact Body — Beryllium copper, .000050 [0.00127] min. gold plate over .000050 [0.00127] min. copper underplate

Socket Hood — Brass, .000050 [0.00127] min. gold plate over .000100 [0.00254] min. copper underplate

Insert — Polyphenylene Sulfide (PPS)

Spacer — Black nylon

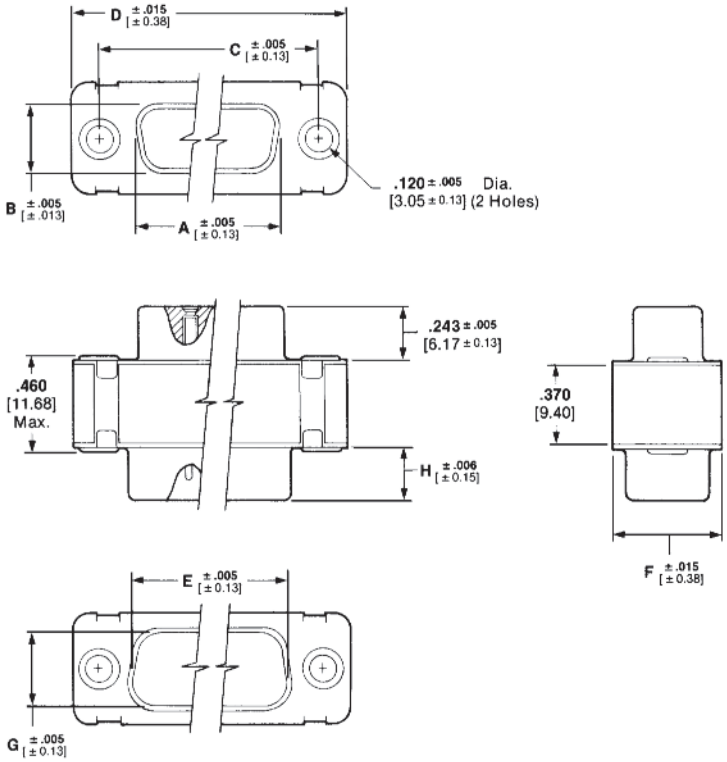

Dimensions							
A (Outside)	B (Outside)	C	D	E (Inside)	F	G (Inside)	H
.643 16.33	**.311** 7.9	**.984** 24.99	**1.213** 30.81	**.666** 16.92	**.494** 12.55	**.329** 8.36	**.235** 5.97
.971 24.66	**.311** 7.9	**1.312** 33.32	**1.541** 39.14	**.994** 25.25	**.494** 12.55	**.329** 8.36	**.235** 5.97
1.511 38.38	**.311** 7.9	**1.852** 47.04	**2.088** 53.04	**1.534** 38.96	**.494** 12.55	**.329** 8.36	**.230** 5.84
2.159 54.84	**.311** 7.9	**2.500** 63.5	**2.729** 69.32	**2.182** 55.42	**.494** 12.55	**.329** 8.36	**.230** 5.84
2.064 52.43	**.423** 10.74	**2.406** 61.11	**2.635** 66.93	**2.079** 52.81	**.605** 15.37	**.441** 11.20	**.230** 5.84
2.189 55.60	**.485** 12.32	**2.500** 63.5	**2.729** 69.32	**2.212** 56.18	**.668** 16.97	**.503** 12.78	**.230** 5.84

No. of Contact Pos. (Shell Size)	Standard (Cadmium Over Steel)	Non-Magnetic (Gold Over Brass)
15 (1)	211010-1	211010-4
26 (2)	211011-1	211011-4
44 (3)	211012-1	211012-4
62 (4)	211013-1	211013-4
78 (5)	211014-1	211014-4
104 (6)	211015-1	211015-4

Dimensions are shown for reference purposes only. Specifications subject to change.

Dimensions are in millimeters unless otherwise specified.

USA: +1 800 522 6752
Asia Pacific: +86 0 400 820 6015
UK: +44 800 267 666

For additional support numbers please visit www.te.com

AMPLIMITE Connectors, Series 90 Cross Reference

Material and Finish

Shell — Steel, tin plated per ASTM-B-545, .000400–.000550 [0.01016–0.01397] thick.

Insert — Approved material per MIL-DTL-24308.

Retention Clips — Stainless steel or copper alloy.

Related Product Data

Series 90 Connectors — pages 8-72 to 8-75

Attention: Connector Marking

Connector marking may differ from package marking.

Note: Meets 48 hr. salt spray requirements of MIL-DTL-24308.

Series 90 Connectors

No. of Contact Pos. (Shell Size)	Part Number	Description	Dimensions
15 (1)	204501-6	Plug Only	Refer to pages 6-69 to 6-72
	204501-5	Plug Only with Grounding Indents	
	204500-4	Receptacle Only	
26 (2)	204503-5	Plug Only	Refer to pages 6-69 to 6-72
	204503-4	Plug Only with Grounding Indents	
	204502-4	Receptacle Only	
44 (3)	204505-6	Plug Only	Refer to pages 6-69 to 6-72
	204505-5	Plug Only with Grounding Indents	
	204504-5	Receptacle Only	
62 (4)	204507-6	Plug Only	Refer to pages 6-69 to 6-72
	204507-5	Plug Only with Grounding Indents	
	204506-6	Receptacle Only	
78 (5)	204509-7	Plug Only	Refer to pages 6-69 to 6-72
	204509-8	Plug Only with Grounding Indents	
	204508-5	Receptacle Only	
104 (6)	—	Plug Only	Refer to pages 6-69 to 6-72
	—	Plug Only with Grounding Indents	
	—	Receptacle Only	

AMPLIMITE Connectors, ULTRA-LITE Connectors

Product Facts

- **One-piece aluminum shells for light-weight and enhanced EMI performance**
- **Connectors are typically 15–20% lighter than brass counterparts**
- **Intermates/interchanges with existing designs**
- **Enhanced EMI performance over brass shells by 10–20 dB**
- **Series 109 Plugs & Receptacles shell size 1 through 5 (9-50 positions)**
- **Series 90 Plugs & Receptacles in shell size 1 through 6 (15-104 positions)**
- **Can be provided with or without grommet**
- **Plug shells include grounding indents**
- **Designed to meet NASA 311P**
- **Designed to meet MIL-DTL-24308D specification**
- **DSCC Drawings 99012 through 99015**

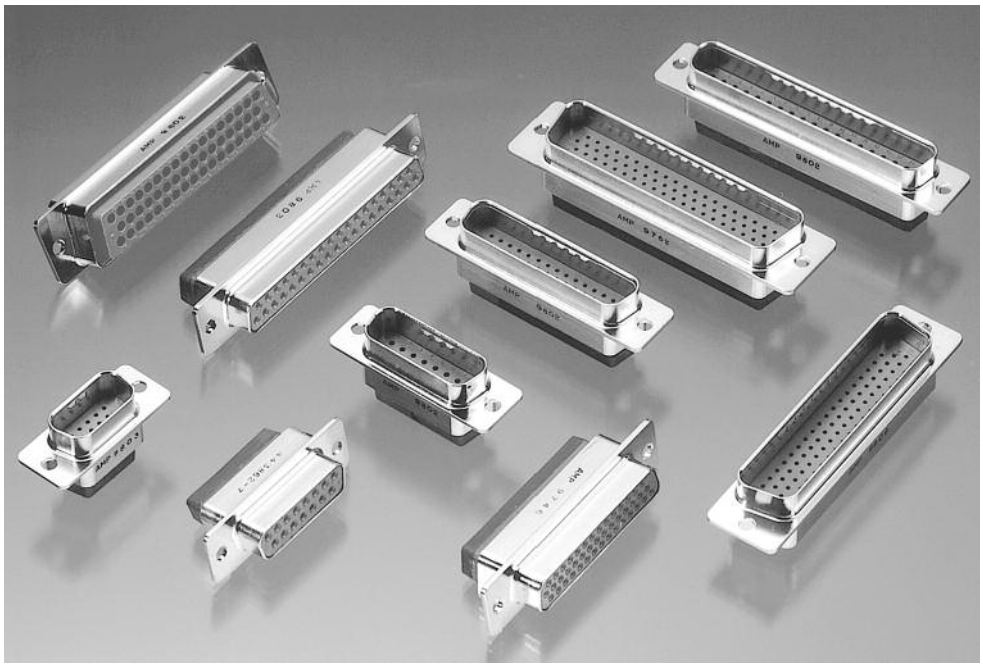

Material and Finish

Housing Material — Polyphenylene Sulfide (PPS)

Shell Finish — .000050 [0.00127] min. gold plate over .00100–.00125 [0.0254–0.0318] nickel underplate

Shell Material — Aluminum alloy

Temperature Range — –67°F to 257°F [–55°C to 125°C]

Voltage Rating — 300 V

Current Rating — Contact current rating per MIL-C-39029
Size 20 — 7.5 amps in free air
Size 22 — 5.0 amps in free air
(refer to MIL Spec. for cable specifications)

Low Level Termination Resistance — 11 Ohm max. 109 Series, 17 milliohms only for 90 Series per MIL-C-39029

Performance Characteristics

Dielectric Withstanding Voltage — 1000 VAC between adjacent pos.

Insulation Resistance — Min. 1000 milliohm between adjacent pos.

Voltage Rating — 300 V

Durability — Up to 500 matings/cycle

Vibration — 3.13 G's RMS between 5–500 Hz 15 minutes per plane

Physical Shock — 18 drops, half-sine 30 G's at 11 millisecond

Temperature Range — –67°F to 257°F [–55°C to 125°C]

Thermal Shock — –67°F to 257°F [–55°C to 125°C]

Temperature-Humidity — 77°F to 149°F [+25°C to +65°C] at 95% relative humidity

Corrosion — Mixed flowing gas, class II

Product Specifications — 108-1834 (Design objectives)

Weight Comparisons for the AMPLIMITE Connector Series 90 (1) PC AL vs the (2) PC Brass NASA Grade Connector Assemblies

Receptacles

Shell Size	Connector Position	Aluminum Shell Assy. Without Grommet	Brass Shell Assy. Without Grommet	Brass to Aluminum % Difference Without Grommet
1	15	4	5.2	23.1%
2	26	6.2	7.5	17.3%
3	44	9	10.9	17.4%
4	62	12.4	15.3	19.0%
5	78	15.3	17.9	14.5%
6	104	17.2	20	14.0%

Note: All weight values are in grams.

Plugs

Shell Size	Connector Position	Aluminum Shell Assy. Without Grommet	Brass Shell Assy. Without Grommet	Brass to Aluminum % Difference Without Grommet
1	15	3.6	4.6	21.7%
2	26	5.3	6.2	14.5%
3	44	7.8	10.3	24.3%
4	62	10.9	14.1	22.7%
5	78	12.7	15.9	20.1%
6	104	14.3	17.5	18.3%

Note: All weight values are in grams.

Catalog 1308940
Revised 9-14

www.te.com

Dimensions are shown for reference purposes only. Specifications subject to change.

Dimensions are in millimeters unless otherwise specified.

USA: +1 800 522 6752
Asia Pacific: +86 0 400 820 6015
UK: +44 800 267 666

For additional support numbers please visit www.te.com

AMPLIMITE Connectors, ULTRA-LITE Connectors (Continued)

ULTRA-LITE Connector Plugs and Receptacles, Series 109

Connector Material and Finish

Shell — Aluminum alloy, gold plated per MIL-G-45204 over nickel per MIL-C-26074.

Insert — Blue diallyl phthalate per MIL-M-14 or black Polyphenylene Sulfide (PPS) per MIL-M-24519 or blue thermoplastic per MIL-M-24519

Retention Clips — Beryllium copper

Grommet — Silicon rubber per ZZ-R-765, color: red

Contacts — Uses size 20 crimp or posted contacts, ref. pages 8-40 to 8-42.

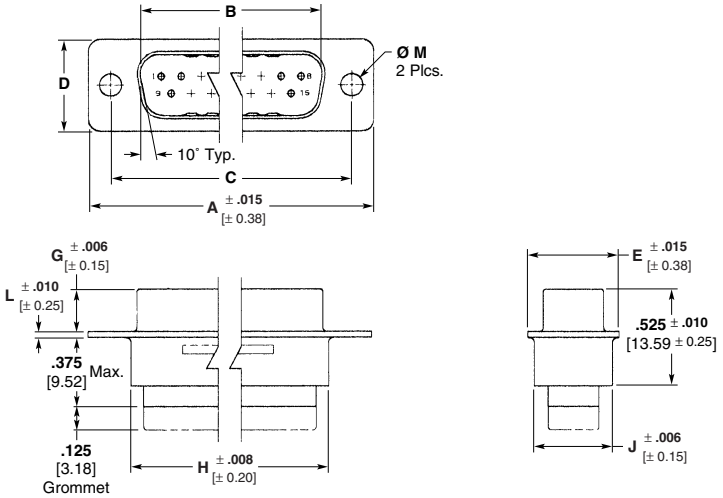

Plugs

No. of Contact Pos. (Shell Size)	Dimensions A	B	C	D	E	G	H	J	L	NASA[1] Part Number for reference only	AMP RoHS Part Number M = .120 [3.05]	M = .154 [3.91]
9 (1)	**1.213** 30.81	**.666** 16.92	**.984** 24.99	**.329** 8.36	**.494** 12.55	**.235** 5.97	**.770** 19.56	**.438** 11.13	**.030** 0.76	311P409-1P-B-15	1218234-1 / 1218234-6*	1883005-1
15 (2)	**1.541** 39.14	**.994** 25.25	**1.312** 33.32	**.329** 8.36	**.494** 12.55	**.235** 5.97	**1.094** 27.79	**.438** 11.13	**.030** 0.76	311P409-2P-B-15	1218234-2 / 1218234-7*	1883005-2
25 (3)	**2.088** 53.04	**1.534** 38.96	**1.852** 47.04	**.329** 8.36	**.494** 12.55	**.230** 5.84	**1.636** 41.55	**.438** 11.13	**.039** 0.99	311P409-3P-B-15	1218234-3 / 1218234-8*	1883005-3
37 (4)	**2.729** 69.32	**2.182** 55.42	**2.500** 63.50	**.329** 8.36	**.494** 12.55	**.230** 5.84	**2.284** 58.01	**.438** 11.13	**.039** 0.99	311P409-4P-B-15	1218234-4 / 1218234-9*	1883005-4
50 (5)	**2.635** 66.93	**2.079** 52.81	**2.406** 61.11	**.441** 11.20	**.605** 15.38	**.230** 5.84	**2.189** 55.60	**.550** 13.97	**.039** 0.99	311P409-5P-B-15	1218234-5 / 1-1218234-0*	1883005-5

*Rubber Grommet

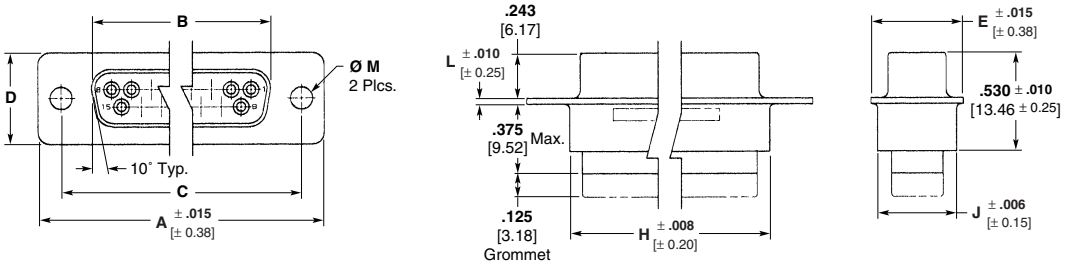

Receptacles

No. of Contact Pos. (Shell Size)	Dimensions A	B	C	D	E	H	J	L	NASA[1] Part Number for reference only	AMP RoHS Part Number M = .120 [3.05]	M = .154 [3.91]
9 (1)	**1.213** 30.81	**.643** 16.33	**.984** 24.99	**.311** 7.90	**.494** 12.55	**.770** 19.56	**.438** 11.13	**.030** 0.76	311P409-1S-B-15	1218235-1 / 1218235-6*	1883006-1
15 (2)	**1.541** 39.14	**.971** 24.66	**1.312** 33.32	**.311** 7.90	**.494** 12.55	**1.094** 27.79	**.438** 11.13	**.030** 0.76	311P409-2S-B-15	1218235-2 / 1218235-7*	1883006-2
25 (3)	**2.088** 53.04	**1.511** 38.38	**1.852** 47.04	**.311** 7.90	**.494** 12.55	**1.636** 41.55	**.438** 11.13	**.039** 0.99	311P409-3S-B-15	1218235-3 / 1218235-8*	1883006-3
37 (4)	**2.729** 69.32	**2.159** 54.84	**2.500** 63.50	**.311** 7.90	**.494** 12.55	**2.284** 58.01	**.438** 11.13	**.039** 0.99	311P409-4S-B-15	1218235-4 / 1218235-9*	1883006-4
50 (5)	**2.635** 66.93	**2.064** 52.43	**2.406** 61.11	**.423** 10.74	**.605** 15.38	**2.189** 55.60	**.550** 13.97	**.039** 0.99	311P409-5S-B-15	1218235-5 / 1-1218235-0*	1883006-5

*Rubber Grommet
[1]Tyco Electronic part numbers are not NASA qualified parts but can replace referenced NASA part numbers.

Dimensions are shown for reference purposes only. Specifications subject to change.

Dimensions are in millimeters unless otherwise specified.

USA: +1 800 522 6752
Asia Pacific: +86 0 400 820 6015
UK: +44 800 267 666

For additional support numbers please visit www.te.com

AMPLIMITE Connectors, ULTRA-LITE Connectors (Continued)

ULTRA-LITE Connector Plugs and Receptacles, Series 90

Connector Material and Finish

Shell — Aluminum alloy, gold plated per MIL-G-45204 over nickel per MIL-C-26074.

Insert — Blue diallyl phthalate per MIL-M-14 or black Polyphenylene Sulfide (PPS) per MIL-M-24519 or blue thermoplastic per MIL-M-24519

Retention Clips — Beryllium copper

Grommet — Silicon rubber per ZZ-R-765, color: red

Contacts — Uses size 22 crimp and posted contacts, ref. pages 8-70 and 8-71.

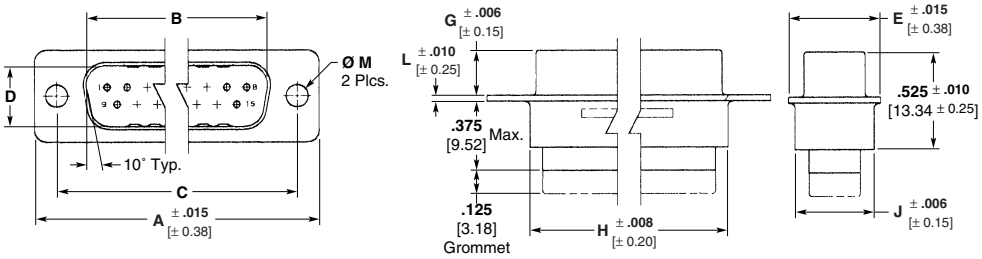

Plugs

No. of Contact Pos. (Shell Size)	Dimensions A	B	C	D	E	G	H	J	L	NASA[1] Part Number for reference only	AMP RoHS Part Number M = .120 [3.05]	M = .154 [3.91]
15 (1)	**1.213** 30.81	**.666** 16.92	**.984** 24.99	**.329** 8.36	**.494** 12.55	**.235** 5.97	**.770** 19.56	**.438** 11.13	**.030** 0.76	311P407-1P-B-15	1218232-1 / 1218232-7*	1883007-1
26 (2)	**1.541** 39.14	**.994** 25.25	**1.312** 33.32	**.329** 8.36	**.494** 12.55	**.235** 5.97	**1.094** 27.79	**.438** 11.13	**.030** 0.76	311P407-2P-B-15	1218232-2 / 1218232-8*	1883007-2
44 (3)	**2.088** 53.04	**1.534** 38.96	**1.852** 47.04	**.329** 8.36	**.494** 12.55	**.230** 5.84	**1.636** 41.55	**.438** 11.13	**.039** 0.99	311P407-3P-B-15	1218232-3 / 1218232-9*	1883007-3
62 (4)	**2.729** 69.32	**2.182** 55.42	**2.500** 63.50	**.329** 8.36	**.494** 12.55	**.230** 5.84	**2.284** 58.01	**.438** 11.13	**.039** 0.99	311P407-4P-B-15	1218232-4 / 1-1218232-0*	1883007-4
78 (5)	**2.635** 66.93	**2.079** 52.81	**2.406** 61.11	**.441** 11.20	**.605** 15.38	**.230** 5.84	**2.189** 55.60	**.550** 13.97	**.039** 0.99	311P407-5P-B-15	1218232-5 / 1-1218232-1*	1883007-5
104 (6)	**2.729** 69.32	**2.212** 56.18	**2.500** 63.50	**.503** 12.78	**.668** 16.97	**.230** 5.84	**2.313** 58.75	**.608** 15.44	**.039** 0.99	311P407-6P-B-15	1218232-6 / 1-1218232-2*	1883007-6

*Rubber Grommet

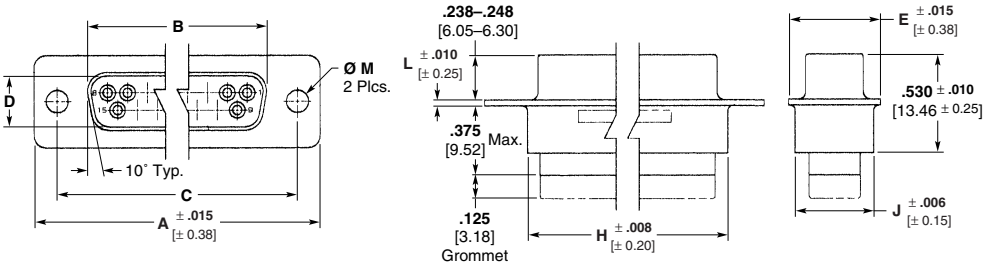

Receptacles

No. of Contact Pos. (Shell Size)	Dimensions A	B	C	D	E	H	J	L	NASA[1] Part Number for reference only	AMP RoHS Part Number M = .120 [3.05]	M = .154 [3.91]
15 (1)	**1.213** 30.81	**.644** 16.36	**.984** 24.99	**.311** 7.90	**.494** 12.55	**.770** 19.56	**.438** 11.13	**.030** 0.76	311P407-1S-B-15	1218233-1 / 1218233-7*	-1
26 (2)	**1.541** 39.14	**.972** 24.69	**1.312** 33.32	**.311** 7.90	**.494** 12.55	**1.094** 27.79	**.438** 11.13	**.030** 0.76	311P407-2S-B-15	1218233-2 / 1218233-8*	1883008-2
44 (3)	**2.088** 53.04	**1.512** 38.40	**1.852** 47.04	**.311** 7.90	**.494** 12.55	**1.636** 41.55	**.438** 11.13	**.039** 0.99	311P407-3S-B-15	1218233-3 / 1218233-9*	1883008-3
62 (4)	**2.729** 69.32	**2.160** 54.86	**2.500** 63.50	**.311** 7.90	**.494** 12.55	**2.284** 58.01	**.438** 11.13	**.039** 0.99	311P407-4S-B-15	1218233-4 / 1-1218233-0*	1883008-4
78 (5)	**2.635** 66.93	**2.065** 52.45	**2.406** 61.11	**.423** 10.74	**.605** 15.38	**2.189** 55.60	**.550** 13.97	**.039** 0.99	311P407-5S-B-15	1218233-5 / 1-1218233-1*	1883008-5
104 (6)	**2.729** 69.32	**2.190** 55.63	**2.500** 63.50	**.485** 12.32	**.668** 16.97	**2.313** 58.75	**.608** 15.44	**.039** 0.99	311P407-6S-B-15	1218233-6 / 1-1218233-2*	1883008-6

*Rubber Grommet
[1]Tyco Electronic part numbers are not NASA qualified parts but can replace referenced NASA part numbers.

Dimensions are shown for reference purposes only. Specifications subject to change.

Dimensions are in millimeters unless otherwise specified.

USA: +1 800 522 6752
Asia Pacific: +86 0 400 820 6015
UK: +44 800 267 666

For additional support numbers please visit www.te.com

AMPLIMITE Connectors, ULTRA-LITE Connectors (Continued)

ULTRA-LITE Connector Plugs and Receptacles, Series 109, Crimp

Meets EU Directive 2002/95/EC RoHS

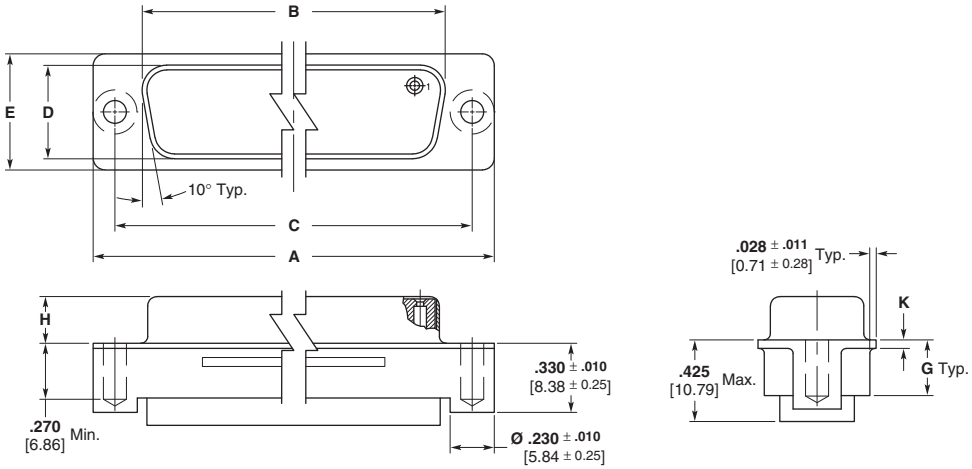

Plugs

No. of Contact Pos. (Shell Size)	Dimensions A	B	C	D	E	G ± .010 [0.25]	H	K	NASA[1] Part Number for reference only	AMP Part Number
9 (1)	**1.208/1.218** 30.68/30.94	**.661/.671** 16.79/17.04	**.979/.989** 24.87/25.12	**.324/.334** 8.23/8.48	**.489/.499** 12.42/12.67	**.294** 7.47	**.229/.241** 5.82/6.12	**.035** 0.89	311P409-1P-B-440	1883053-1
15 (2)	**1.536/1.546** 39.01/39.27	**.989/.999** 25.12/25.37	**1.307/1.317** 33.20/33.45	**.324/.334** 8.23/8.48	**.489/.499** 12.42/12.67	**.294** 7.47	**.229/.241** 5.82/6.12	**.035** 0.89	311P409-2P-B-440	1883053-2
25 (3)	**2.083/2.093** 52.91/53.16	**1.529/1.239** 38.84/39.09	**1.848/1.857** 46.91/47.17	**.324/.334** 8.23/8.48	**.489/.499** 12.42/12.67	**.299** 7.59	**.224/.236** 5.69/5.99	**.044** 1.12	311P409-3P-B-440	1883053-3
37 (4)	**2.724/2.734** 69.20/69.44	**2.177/2.187** 55.30/55.55	**2.495/2.505** 63.37/63.63	**.324/.334** 8.23/8.48	**.489/.499** 12.42/12.67	**.299** 7.59	**.224/.236** 5.69/5.99	**.044** 1.12	311P409-4P-B-440	1883053-4
50 (5)	**2.630/2.640** 66.80/67.06	**2.074/2.084** 52.68/52.93	**2.401/2.411** 60.99/61.24	**.436/.446** 11.07/11.33	**.500/.610** 15.24/15.49	**.299** 7.59	**.224/.236** 5.69/5.99	**.044** 1.12	311P409-5P-B-440	1883053-5

Receptacles

No. of Contact Pos. (Shell Size)	Dimensions A	B	C	D	E	G ± .010 [0.25]	H	K	NASA[1] Part Number for reference only	AMP Part Number
9 (1)	**1.208/1.218** 30.68/30.94	**.638/.648** 16.21/16.46	**.979/.989** 24.87/25.12	**.306/.316** 7.77/8.03	**.489/.499** 12.42/12.67	**.290** 7.37	**.270** 6.86	**.035** 0.89	311P409-1S-B-440	1883054-1
15 (2)	**1.536/1.546** 39.01/39.27	**.966/.976** 24.54/24.79	**1.307/1.317** 33.20/33.45	**.306/.316** 7.77/8.03	**.489/.499** 12.42/12.67	**.290** 7.37	**.270** 6.86	**.035** 0.89	311P409-2S-B-440	1883054-2
25 (3)	**2.083/2.093** 52.91/53.16	**1.506/1.516** 38.25/38.51	**1.847/1.857** 46.91/47.17	**.306/.316** 7.77/8.03	**.489/.499** 12.42/12.67	**.290** 7.37	**.270** 6.86	**.044** 1.12	311P409-3S-B-440	1883054-3
37 (4)	**2.724/2.734** 69.20/69.44	**2.154/2.164** 54.71/54.97	**2.495/2.505** 63.37/63.63	**.306/.316** 7.77/8.03	**.489/.499** 12.42/12.67	**.290** 7.37	**.270** 6.86	**.044** 1.12	311P409-4S-B-440	1883054-4
50 (5)	**2.630/2.640** 66.80/67.06	**2.059/2.069** 52.30/52.55	**2.401/2.411** 60.99/61.24	**.418/.428** 10.62/10.87	**.600/.610** 15.24/15.49	**.290** 7.37	**.270** 6.86	**.044** 1.12	311P409-5S-B-440	1883054-5

[1]Tyco Electronic part numbers are not NASA qualified parts but can replace referenced NASA part numbers.

Dimensions are shown for reference purposes only. Specifications subject to change.

Dimensions are in millimeters unless otherwise specified.

USA: +1 800 522 6752
Asia Pacific: +86 0 400 820 6015
UK: +44 800 267 666

For additional support numbers please visit www.te.com

AMPLIMITE Connectors, ULTRA-LITE Connectors (Continued)

ULTRA-LITE Connector Plugs and Receptacles, Series 109, Crimp (Continued)

Meets EU Directive 2002/95/EC RoHS

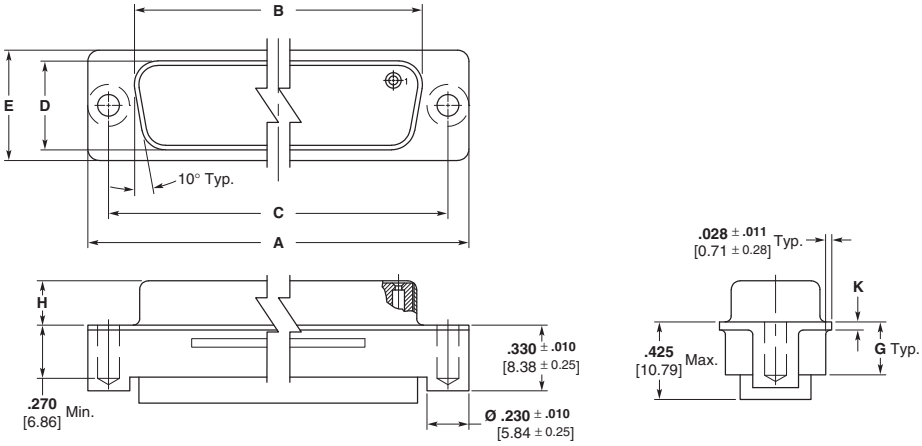

Plugs

No. of Contact Pos. (Shell Size)	Dimensions A	B	C	D	E	G ± .010 [0.25]	H	K	NASA[1] Part Number for reference only	AMP Part Number
15 (1)	**1.208/1.218** 30.68/30.94	**.661/.671** 16.79/17.04	**.979/.989** 24.87/25.12	**.324/.334** 8.23/8.48	**.489/.499** 12.42/12.67	**.294** 7.47	**.229/.241** 5.82/6.12	**.035** 0.89	311P407-1P-B-440	1883055-1
26 (2)	**1.536/1.546** 39.01/39.27	**.989/.999** 25.12/25.37	**1.307/1.317** 33.20/33.45	**.324/.334** 8.23/8.48	**.489/.499** 12.42/12.67	**.294** 7.47	**.229/.241** 5.82/6.12	**.035** 0.89	311P407-2P-B-440	1883055-2
44 (3)	**2.083/2.093** 52.91/53.16	**1.529/1.539** 38.84/39.09	**1.847/1.857** 46.91/47.17	**.324/.334** 8.23/8.48	**.489/.499** 12.42/12.67	**.299** 7.59	**.224/.236** 5.69/5.99	**.044** 1.12	311P407-3P-B-440	1883055-3
62 (4)	**2.724/2.734** 69.20/69.44	**2.177/2.187** 55.30/55.55	**2.495/2.505** 63.37/63.63	**.324/.334** 8.23/8.48	**.489/4.99** 12.42/12.67	**.299** 7.59	**.224/.236** 5.69/5.99	**.044** 1.12	311P407-4P-B-440	1883055-4
78 (5)	**2.630/2.640** 66.80/67.06	**2.074/2.084** 52.68/52.93	**2.401/2.411** 60.99/61.24	**.436/.446** 11.07/11.33	**.600/.610** 15.24/15.49	**.299** 7.59	**.224/.236** 5.69/5.99	**.044** 1.12	311P407-5P-B-440	1883055-5

Receptacles

No. of Contact Pos. (Shell Size)	Dimensions A	B	C	D	E	G ± .010 [0.25]	H	K	NASA[1] Part Number for reference only	AMP Part Number
15 (1)	**1.208/1.218** 30.68/30.94	**.638/.648** 16.21/16.46	**.979/.989** 24.87/25.12	**.306/.316** 7.77/8.03	**.489/.499** 12.42/12.67	**.290** 7.37	**.243** 6.17	**.035** 0.89	311P407-1S-B-440	1883056-1
26 (2)	**1.536/1.546** 39.01/39.27	**.966/.976** 24.54/24.79	**1.307/1.317** 33.20/33.45	**.306/.316** 7.77/8.03	**.489/.499** 12.42/12.67	**.290** 7.37	**.243** 6.17	**.035** 0.89	311P407-2S-B-440	1883056-2
44 (3)	**2.083/2.093** 52.91/53.16	**1.506/1.516** 38.25/38.51	**1.847/1.857** 46.91/47.17	**.306/.316** 7.77/8.03	**.489/.499** 12.42/12.67	**.290** 7.37	**.243** 6.17	**.044** 1.12	311P407-3S-B-440	1883056-3
62 (4)	**2.724/2.734** 69.20/69.44	**2.154/2.164** 54.71/54.97	**2.495/2.505** 63.37/63.63	**.306/.316** 7.77/8.03	**.489/.499** 12.42/12.67	**.290** 7.37	**.243** 6.17	**.044** 1.12	311P407-4S-B-440	1883056-4
78 (5)	**2.630/2.640** 66.80/67.06	**2.059/2.069** 52.30/52.55	**2.401/2.411** 60.99/61.24	**.418/.428** 10.62/10.87	**.600/.610** 15.24/15.49	**.290** 7.37	**.243** 6.17	**.044** 1.12	311P407-5S-B-440	1883056-5

ULTRA-LITE Connector Plugs and Receptacles, Coax Mix

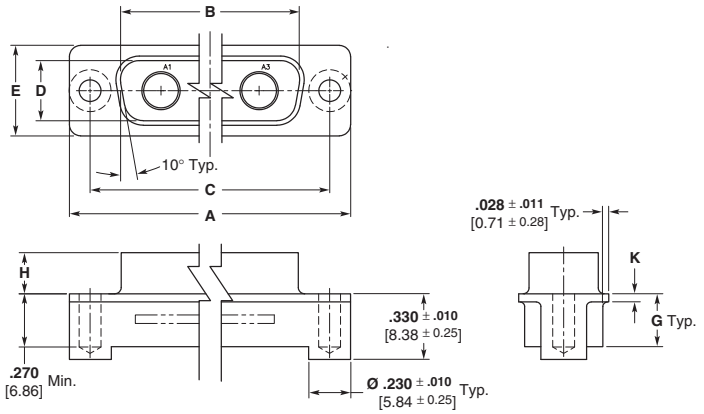

Insert Arrangement (Shell Size)	Dimensions A	B	C	D	E	G ± .010 [0.25]	H	K	NASA Part Number	AMP Part Number
3C3 (2)	**1.536/1.546** 39.01/39.27	**.989/.999** 25.12/25.37	**1.307/1.317** 33.20/33.45	**.324/.334** 8.23/8.48	**.489/.499** 12.42/12.67	**.294** 7.47	**.229/.241** 5.82/6.12	**.035** 0.89	311P405-7P-B-440	1883057-1
3C3 (2)	**1.536/1.546** 39.01/39.27	**.966/.976** 24.54/24.79	**1.307/1.317** 33.20/33.45	**.306/.316** 7.77/8.03	**.489/.499** 12.42/12.67	**.290** 7.37	**.243** 6.17	**.035** 0.89	311P405-7S-B-440	1883058-1
5C5 (3)	**2.083/2.093** 52.91/53.16	**1.529/1.539** 38.84/39.09	**1.847/1.857** 46.91/47.17	**.324/.334** 8.23/8.48	**.489/.499** 12.42/12.67	**.299** 7.59	**.224/.236** 5.69/5.99	**.044** 1.12	311P405-10P-B-440	1883059-1
5C5 (3)	**2.083/2.093** 52.91/53.16	**1.506/1.516** 38.25/38.51	**1.847/1.857** 46.91/47.17	**.306/.316** 7.77/8.03	**.489/.499** 12.42/12.67	**.290** 7.37	**.243** 6.17	**.044** 1.12	311P405-10S-B-440	1883060-1

[1]Tyco Electronic part numbers are not NASA qualified parts but can replace referenced NASA part numbers.

Dimensions are shown for reference purposes only. Specifications subject to change.

Dimensions are in millimeters unless otherwise specified.

USA: +1 800 522 6752
Asia Pacific: +86 0 400 820 6015
UK: +44 800 267 666

For additional support numbers please visit www.te.com

AMPLIMITE Connectors, ULTRA-LITE Connectors (Continued)

ULTRA-LITE AMPLIMITE Connector Part Numbers vs. NASA's 311P Part Numbers and DSCC Part Numbers

AMPLIMITE Connector Series 90 (High Density Sub "D"'s)

DSCC[1] Part No. w/Grommet for reference only	DSCC[1] Part No. w/out Grommet for reference only	NASA[1] Part No. w/out Grommet for reference only	Plug / Receptacle	Shell Size	Position	ULTRA-LITE Connectors	
						Part No. w/out Grommet	Part No. with Grommet
99012SAFPRA-1	99012NAFPR-1	311P407-1P-B-12	Plug	1	15	1218232-1	1218232-7
99012SAFPRA-2	99012NAFPR-2	311P407-2P-B-12	Plug	2	26	1218232-2	1218232-8
99012SAFPRA-3	99012NAFPR-3	311P407-3P-B-12	Plug	3	44	1218232-3	1218232-9
99012SAFPRA-4	99012NAFPR-4	311P407-4P-B-12	Plug	4	62	1218232-4	1-1218232-0
99012SAFPRA-5	99012NAFPR-5	311P407-5P-B-12	Plug	5	78	1218232-5	1-1218232-1
99012SAFPRA-6	99012NAFPR-6	311P407-6P-B-12	Plug	6	104	1218232-6	1-1218232-2
99014SAESR-1	99014NAESR-1	311P407-1S-B-12	Receptacle	1	15	1218233-1	1218233-7
99014SAESR-2	99014NAESR-2	311P407-2S-B-12	Receptacle	2	26	1218233-2	1218233-8
99014SAESR-3	99014NAESR-3	311P407-3S-B-12	Receptacle	3	44	1218233-3	1218233-9
99014SAESR-4	99014NAESR-4	311P407-4S-B-12	Receptacle	4	62	1218233-4	1-1218233-0
99014SAESR-5	99014NAESR-5	311P407-5S-B-12	Receptacle	5	78	1218233-5	1-1218233-1
99014SAESR-6	99014NAESR-6	311P407-6S-B-12	Receptacle	6	104	1218233-6	1-1218233-2

AMPLIMITE Connector Series 109 (Standard Density Sub "D"'s)

DSCC[1] Part No. w/Grommet for reference only	DSCC[1] Part No. w/out Grommet for reference only	NASA[1] Part No. w/out Grommet for reference only	Plug / Receptacle	Shell Size	Position	ULTRA-LITE Connectors	
						Part No. w/out Grommet	Part No. with Grommet
99013SAEPR-1	99013NAEPR-1	311P409-1P-B-12	Plug	1	9	1218234-1	1218234-7
99013SAEPR-2	99013NAEPR-2	311P409-2P-B-12	Plug	2	15	1218234-2	1218234-8
99013SAEPR-3	99013NAEPR-3	311P409-3P-B-12	Plug	3	25	1218234-3	1218234-9
99013SAEPR-4	99013NAEPR-4	311P409-4P-B-12	Plug	4	37	1218234-4	1-1218234-0
99013SAEPR-5	99013NAEPR-5	311P409-5P-B-12	Plug	5	50	1218234-5	1-1218234-1
99015SAESR-1	99015NAESR-1	311P409-1S-B-12	Receptacle	1	9	1218235-1	1218235-7
99015SAESR-2	99015NAESR-2	311P409-2S-B-12	Receptacle	2	15	1218235-2	1218235-8
99015SAESR-3	99015NAESR-3	311P409-3S-B-12	Receptacle	3	25	1218235-3	1218235-9
99015SAESR-4	99015NAESR-4	311P409-4S-B-12	Receptacle	4	37	1218235-4	1-1218235-0
99015SAESR-5	99015NAESR-5	311P409-5S-B-12	Receptacle	5	50	1218235-5	1-1218235-1

[1]Tyco Electronic part numbers are not DSCC or NASA qualified parts but can replace referenced NASA part numbers.

Dimensions are shown for reference purposes only. Specifications subject to change.

Dimensions are in millimeters unless otherwise specified.

USA: +1 800 522 6752
Asia Pacific: +86 0 400 820 6015
UK: +44 800 267 666

For additional support numbers please visit www.te.com

AMPLIMITE Connectors

Application Tools for Series 109 (Size 20) Crimp Contacts

Pin and Socket Insertion/Extraction Tool

AMP Part Number 91067-2 or
MIL Part Number M81969/1-02

Insertion tip, for replacement
Part Number 126195-3

Extraction tip, for replacement
Part Number 126195-4

AMP-TAPEMATIC Stripper/ Crimper Machine Part Number 599406-7

Funnel Part Number 125905-1 for Size 20 Contacts

The AMP-TAPEMATIC Stripper/Crimper Machine strips wire and applies an 8-indent crimp termination per MIL-C-22520. The machine terminates pin and socket contacts which are tape mounted and reel fed. It offers production rates of up to 1200 finished leads per hour, provides overall lower applied costs and maintains a high degree of termination reliability.

Hand Crimping Tool
AMP Part Number 601966-1 or MIL Part Number M22520/2-01

Positioner
AMP Part Number 601966-5 or MIL Part Number M22520/2-08

This standard military-type hand tool terminates pins and sockets to wire with an 8-indent, M22520/2 crimp. It is ideally suited for prototype, field maintenance and other applications where volume production is not a factor.

Application Tools for Series 90 (Size 22) Crimp Contacts

Pin and Socket Insertion/Extraction Tool

AMP Part Number 91067-1 or
MIL Part Number M81969/1-04

Insertion tip, for replacement
Part Number 126237-1

Extraction tip, for replacement
Part Number 126195-2

AMP-TAPEMATIC Stripper/ Crimper Machine Part Number 599406-7

Funnel Part Number 125905-2 for Size 22 Contacts

The AMP-TAPEMATIC Stripper/Crimper Machine strips wire and applies an 8-indent crimp termination per MIL-C-22520. The machine terminates pin and socket contacts which are tape mounted and reel fed. It offers production rates of up to 1200 finished leads per hour, provides overall lower applied costs and maintains a high degree of termination reliability.

Hand Crimping Tool
AMP Part Number 601966-1 or MIL Part Number M22520/2-01

Positioner (Pin)
AMP Part Number 601966-6 or MIL Part Number M22520/2-09

Positioner (Socket)
AMP Part Number 601966-4 or MIL Part Number M22520/2-06

This standard military-type hand tool terminates pins and sockets to wire with an 8-indent, M22520/2 crimp. It is ideally suited for prototype, field maintenance and other applications where volume production is not a factor.

Dimensions are shown for reference purposes only. Specifications subject to change.

Dimensions are in millimeters unless otherwise specified.

USA: +1 800 522 6752
Asia Pacific: +86 0 400 820 6015
UK: +44 800 267 666

For additional support numbers please visit www.te.com

AMPLIMITE Connectors (Continued)

Mating and Mounting Specifications for Series 109 and Series 90 Connectors

Plug Receptacle Mating

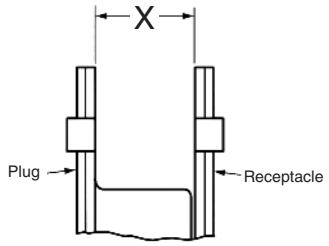

Shell Sizes 1 and 2 —
x = .280/.250 [7.11/6.35]

Shell Sizes 3, 4, 5 and 6 —
x = .271/.241 [6.88/6.12]

Blindmate Connectors (all sizes) —
x = .270 [6.86] max.

The X dimension is necessary for full mating of connector halves. This dimension must be taken into consideration when determining the method of mounting, panel thickness, etc.

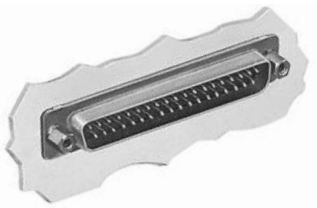

AMPLIMITE Plug, Front-Panel Mounted

AMPLIMITE Receptacle, Rear-Panel Mounted

Attention: Front-Panel Mount

When front mounting a MIL-DTL-24308 connector utilizing the tab method of securing shell halves, it is recommended to utilize a .032 [0.81] thick washer (not supplied) to prevent deformation of connector flange.

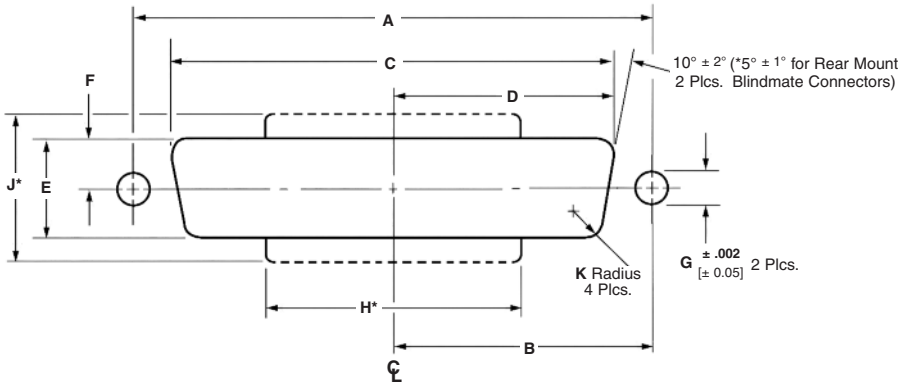

Panel Cutout

Shell Size (No. of Contact Pos.)		Mounting Method		Dimensions									
Series 109 Connectors	Series 90 Connectors	Front/Rear Panel	With/Without Flouting Bushing	A	B	C	D	E	F	G	H*	J*	K
1 (9 Pos.)	1 (15 Pos.)	Front	With	.984 24.99	.492 12.5	.906 23.01	.453 11.51	.545 13.84	.273 6.93	.088 2.24	—	—	.083 2.11
			Without			.874 22.2	.437 11.1	.513 13.03	.257 6.53	.120 3.05	—	—	
		Rear	With			.838 21.29	.419 10.64	.481 12.22	.241 6.12	.088 2.24	.332 8.43	.662 16.81	.132 3.35
			Without			.806 20.47	.403 10.24	.449 11.4	.225 5.72	.120 3.05	.300 7.62	.630 16	
2 (15 Pos.)	2 (26 Pos.)	Front	With	1.312 33.32	.656 16.66	1.234 31.34	.617 15.67	.545 13.84	.273 6.93	.088 2.24	—	—	.083 2.11
			Without			1.202 30.53	.601 15.27	.513 13.03	.257 6.53	.120 3.05	—	—	
		Rear	With			1.166 29.62	.583 14.81	.481 12.22	.241 6.12	.088 2.24	.665 6.64	.662 16.81	.132 3.35
			Without			1.134 28.8	.567 14.4	.449 11.4	.225 5.72	.120 3.05	.623 15.82	.630 16	
3 (25 Pos.)	3 (44 Pos.)	Front	With	1.852 47.04	.926 23.52	1.775 45.09	.888 22.55	.545 13.84	.273 6.93	.088 2.24	—	—	.083 2.11
			Without			1.743 44.27	.872 22.15	.513 13.03	.257 6.53	.120 3.05	—	—	
		Rear	With			1.706 43.33	.853 21.67	.481 12.22	.241 6.12	.088 2.24	1.197 30.4	.662 16.81	.132 3.35
			Without			1.674 42.52	.837 21.26	.449 11.4	.225 5.72	.120 3.05	1.165 29.59	.630 16	
4 (37 Pos.)	4 (62 Pos.)	Front	With	2.500 63.5	1.250 31.75	2.423 61.17	1.212 30.78	.545 13.84	.273 6.93	.088 2.24	—	—	.083 2.11
			Without			2.391 60.73	1.196 30.38	.513 13.03	.257 6.53	.120 3.05	—	—	
		Rear	With			2.354 59.79	1.777 29.9	.481 12.22	.241 6.12	.088 2.24	1.845 46.86	.662 16.81	.132 3.35
			Without			2.326 59.08	1.163 29.54	.449 11.4	.225 5.72	.120 3.05	1.813 46.05	.630 16	
5 (50 Pos.)	5 (78 Pos.)	Front	With	2.406 61.11	1.203 30.56	2.329 59.16	1.165 29.59	.655 16.64	.328 8.33	.088 2.24	—	—	.083 2.11
			Without			2.297 58.34	1.149 29.18	.623 15.82	.312 7.92	.120 3.05	—	—	
		Rear	With			2.250 57.15	1.125 28.58	.587 14.91	.294 7.47	.088 2.24	1.740 44.2	.772 19.61	.132 3.35
			Without			2.218 56.34	1.109 28.17	.555 14.1	.278 7.06	.120 3.05	1.708 43.38	.740 18.8	
—	6 (104 Pos.)	Front	With	2.500 63.5	1.250 31.75	2.453 62.31	1.227 31.17	.717 18.21	.359 9.12	.088 2.24	—	—	.083 2.11
			Without			2.421 61.49	1.211 30.76	.685 17.4	.343 8.71	.120 3.05	—	—	
		Rear	With			2.388 60.66	1.194 30.33	.654 16.61	.327 8.31	.088 2.24	1.875 47.64	.835 21.21	.132 3.35
			Without			2.356 59.84	1.179 29.92	.622 5.8	.311 7.9	.120 3.05	1.843 46.81	.803 20.4	

* Panel cutout configuration with these dimensions provides clearance for mounting connectors with cable clamp assemblies.

Catalog 1308940
Revised 9-14

www.te.com

Dimensions are shown for reference purposes only. Specifications subject to change.

Dimensions are in millimeters unless otherwise specified.

USA: +1 800 522 6752
Asia Pacific: +86 0 400 820 6015
UK: +44 800 267 666

For additional support numbers please visit www.te.com

AMPLIMITE Connectors (Continued)

PCB Layouts — Series 109 (Standard Density)

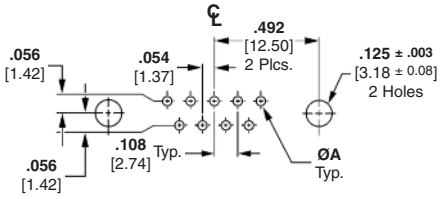

Shell Size 1
(9 Position)

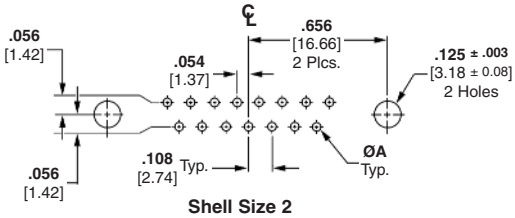

Shell Size 2
(15 Position)

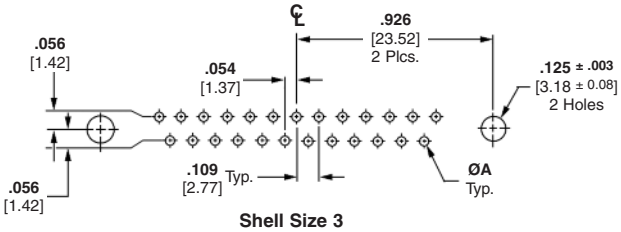

Shell Size 3
(25 Position)

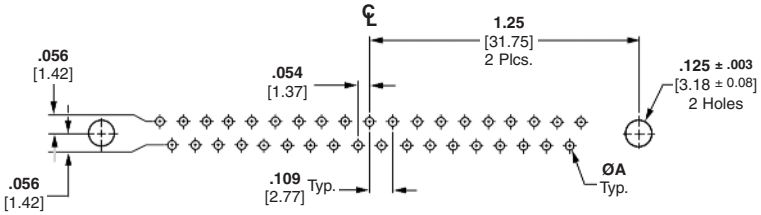

Shell Size 4
(37 Position)

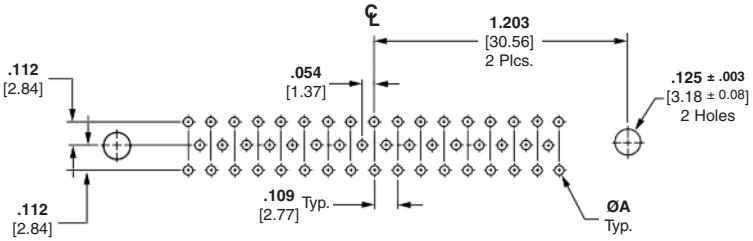

Shell Size 5
(50 Position)

Post Diameter	ØA
.018 [0.46]	**.028** [0.71] — **.038** [0.96]
.025 [0.64]	**.035** [0.89] — **.045** [1.14]
.030 [0.76]	**.040** [1.02] — **.050** [1.27]
.040 [1.02]	**.050** [1.27] — **.060** [1.52]

Notes: 1. Mating face of plug is shown, receptacle is mirror image.
2. PCB mounting hole diameters are provided for connectors with .120 [3.05] diameter mounting holes. For connectors with .154 [3.91] mounting holes, use PCB mounting hole diameter .160 ± .003 [4.06 ± 0.08].
3. PC layouts illustrated above serve as a guide only; they are not to be used for actual design or construction of customer equipment. Consult TE Connectivity customer print for detailed PC board layout requirements.

AMPLIMITE Connectors (Continued)

PCB Layouts — Series 90 (High Density)

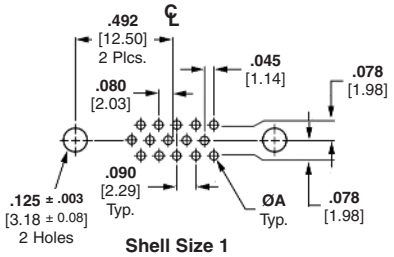

Shell Size 1
(15 Position)

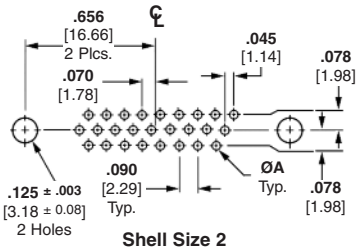

Shell Size 2
(26 Position)

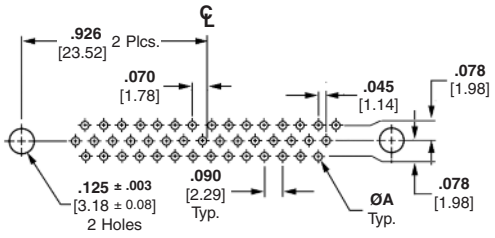

Shell Size 3
(44 Position)

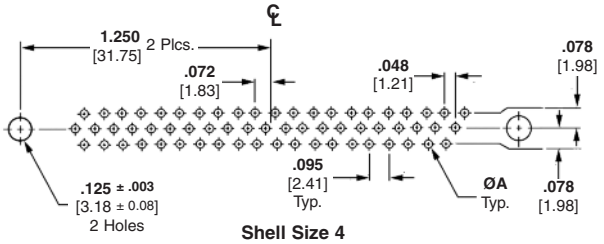

Shell Size 4
(62 Position)

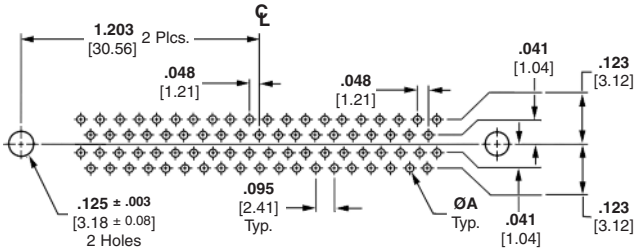

Shell Size 5
(78 Position)

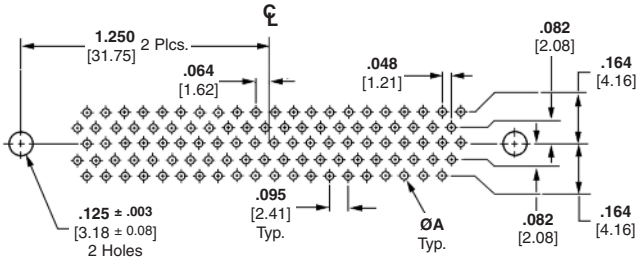

Shell Size 6
(104 Position)

Post Diameter	ØA
.018 [0.46]	**.028** [0.71] — **.038** [0.96]
.025 [0.64]	**.035** [0.89] — **.045** [1.14]
.030 [0.76]	**.040** [1.02] — **.050** [1.27]
.040 [1.02]	**.050** [1.27] — **.060** [1.52]

Notes: 1. Mating face of plug is shown, receptacle is mirror image.
2. PCB mounting hole diameters are provided for connectors with .120 [3.05] diameter mounting holes. For connectors with .154 [3.91] mounting holes, use PCB mounting hole diameter .160 ± .003 [4.06 ± 0.08].
3. PC layouts illustrated above serve as a guide only; they are not to be used for actual design or construction of customer equipment. Consult TE Connectivity customer print for detailed PC board layout requirements.

AMPLIMITE Connectors (Continued)

PCB Layouts (Power/Coax/Signal)

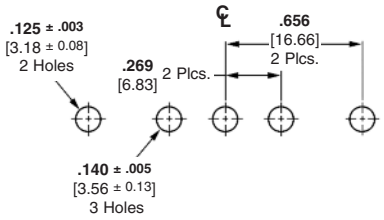

3C3

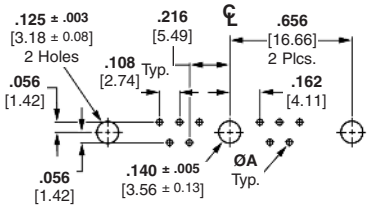

11C1

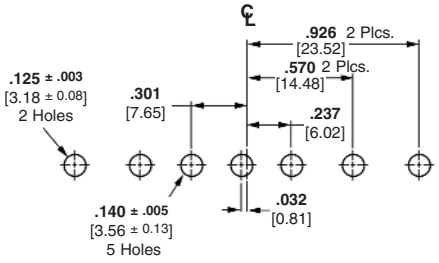

5C5

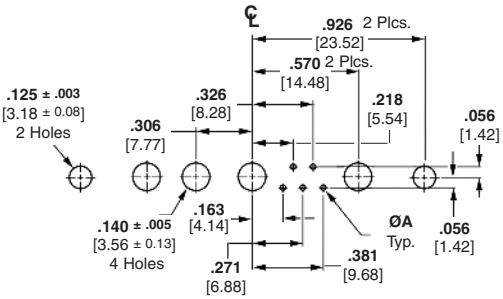

9C4

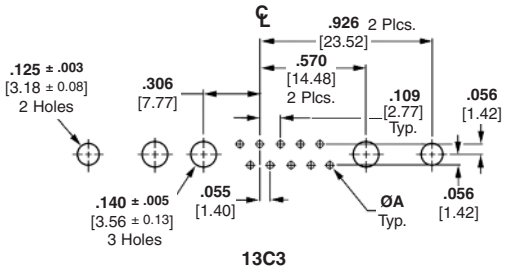

13C3

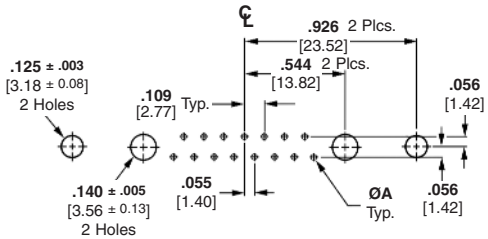

17C2

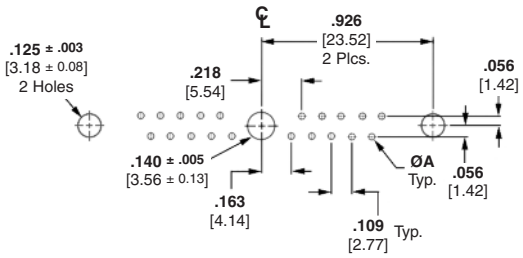

21C1

Post Diameter	ØA
.018 [0.46]	**.028** [0.71] — **.038** [0.96]
.025 [0.64]	**.035** [0.89] — **.045** [1.14]
.030 [0.76]	**.040** [1.02] — **.050** [1.27]
.040 [1.02]	**.050** [1.27] — **.060** [1.52]

Notes: 1. Mating face of plug is shown, receptacle is mirror image.
2. PCB mounting hole diameters are provided for connectors with .120 [3.05] diameter mounting holes. For connectors with .154 [3.91] mounting holes, use PCB mounting hole diameter .160 ± .003 [4.06 ± 0.08].
3. PC layouts illustrated above serve as a guide only; they are not to be used for actual design or construction of customer equipment. Consult TE Connectivity customer print for detailed PC board layout requirements.

AMPLIMITE Connectors (Continued)

PCB Layouts (Power/Coax/Signal) (Continued)

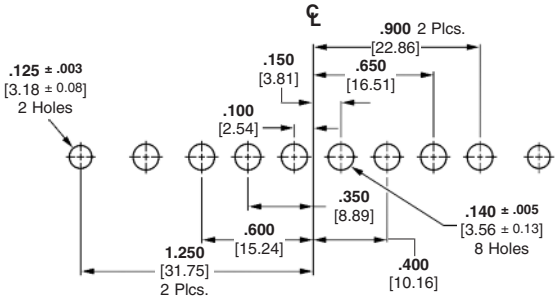

8C8

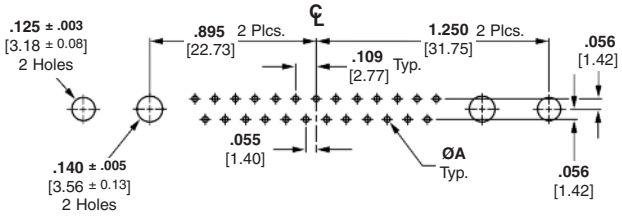

27C2

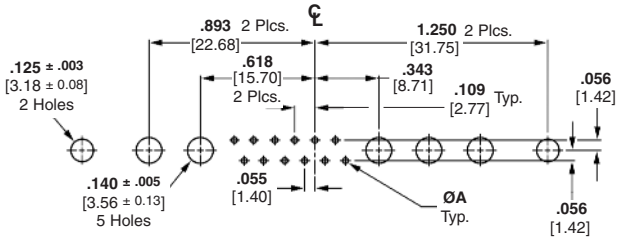

17C5

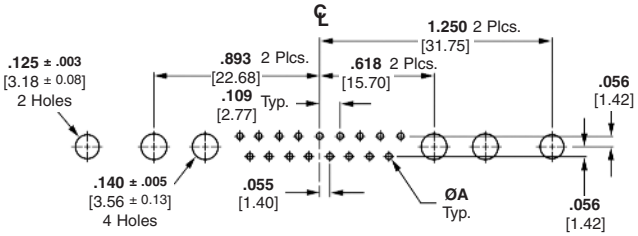

21C4

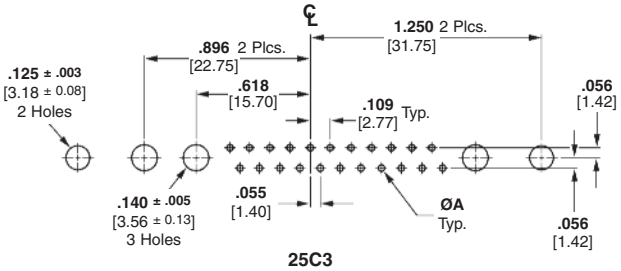

25C3

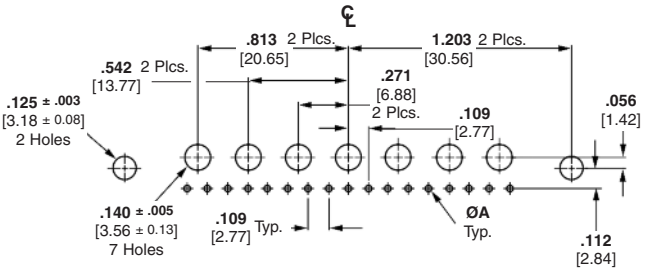

24C7

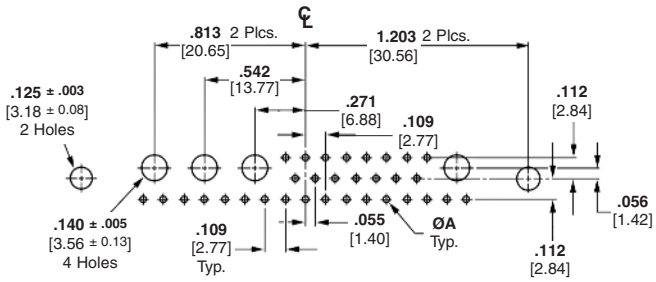

36C4

Post Diameter	ØA
.018 [0.46]	**.028** [0.71] – **.038** [0.96]
.025 [0.64]	**.035** [0.89] – **.045** [1.14]
.030 [0.76]	**.040** [1.02] – **.050** [1.27]
.040 [1.02]	**.050** [1.27] – **.060** [1.52]

Notes: 1. Mating face of plug is shown, receptacle is mirror image.
2. PCB mounting hole diameters are provided for connectors with .120 [3.05] diameter mounting holes. For connectors with .154 [3.91] mounting holes, use PCB mounting hole diameter .160 ± .003 [4.06 ± 0.08].
3. PC layouts illustrated above serve as a guide only; they are not to be used for actual design or construction of customer equipment. Consult TE Connectivity customer print for detailed PC board layout requirements.

AMPLIMITE Connectors (Continued)

Accessories

Female Screwlocks for Metal-Shell Connectors

Material and Finish

Standard Steel Parts — Cold rolled steel per ASTM A108, zinc plated per ASTM B633, Type II, Class SCI

Stainless Steel — Passivated stainless steel

Technical Documents

Instruction Sheet — 408-7837

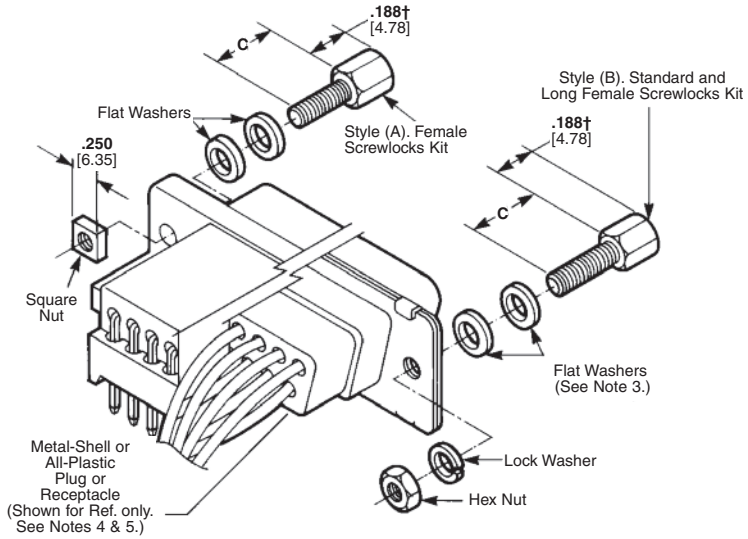

Nut Driver, Part Number 811262-1
(Used for assembling female screwlocks to connector flange)

Connector Used with	Style	Dim. C	Thread Size	Finish	Steel Kit Number Individual	Steel Kit Number Bulk Packed	Stainless Steel Standard Kit	Stainless Steel Long Special
6	(B)	**.312** 7.93	4-40	Yellow Chromate	5205817-1	5205817-2	—	—
					5748271-1†	—	—	—
				Clear Chromate	5205817-3	5205817-4	—	—
			M3 (Metric)	Yellow Chromate	5207872-1	—	—	—
				Clear Chromate	5207872-3	—	—	—
.090 Thick Panels †	(B)	**.312** 7.93	4-40	Yellow Chromate	5748271-3	—	—	—
6	(B)	**.312** 7.93	4-40	Yellow Chromate	—	—	212447-1	—
6	(B)	**.500** 12.7	4-40	Yellow Chromate	—	—	—	212452-1

Individual Screwlocks
(Washers and Nuts not included)

Connector Used with	Style	Dimension C	Thread Size	Finish	Screwlocks Individual	Screwlocks Bulk Packed
6	(B)	**.312** 7.93	4-40	Yellow Chromate	5205818-2	—
				Clear Chromate	5205818-3	—
				Clear Chromate	5748558-3	748558-4
			M2.6** (Metric)	Clear Chromate	5749765-3	—
			4-40	Yellow Chromate	5748270-2†	—
			M3*** (Metric)	Clear Chromate	5747404-3	—
	(Special)	**.185** 4.70	4-40	Clear Chromate	5747877-3	—

Each part is individually bulk packed for multiple kit orders.
With captivated star washer. No additional hardware included.
†Part Number 5748270-2 and 5748271-1 Dimension .158 [4.01]
**M2.6 is the female thread size. The male thread size is 4-40.
***M3 is the female thread size. The male thread size is 4-40.

Notes: 1. All parts are packaged unassembled.
2. Each female screwlock kit is comprised of two assemblies as illustrated above.
3. One or two flat washers may be required for panel thicknesses less than .060 [1.52]. Female screwlocks are not recommended for panel thicknesses greater than .060 [1.52].
4. Female screwlocks with 2-56 thread size are to be used with cable clamps with mounting flanges. Female screwlocks with 4-40 and M3 (Metric) thread sizes can be used with all other cable clamps.

Notes: 5. Female screwlocks mate with male screw retainers (page 8-96).
6. Series 90 and 109 Connectors without eyelets or floating bushings.

AMPLIMITE Connectors (Continued)

Accessories (Continued)

Male Screw Retainers for Metal-Shell Connectors

Material and Finish

Male Screw — Steel, zinc plated clear or yellow chromate

Retaining Clip — .012 [0.31] stainless steel

Technical Documents

Instruction Sheet — 408-7837

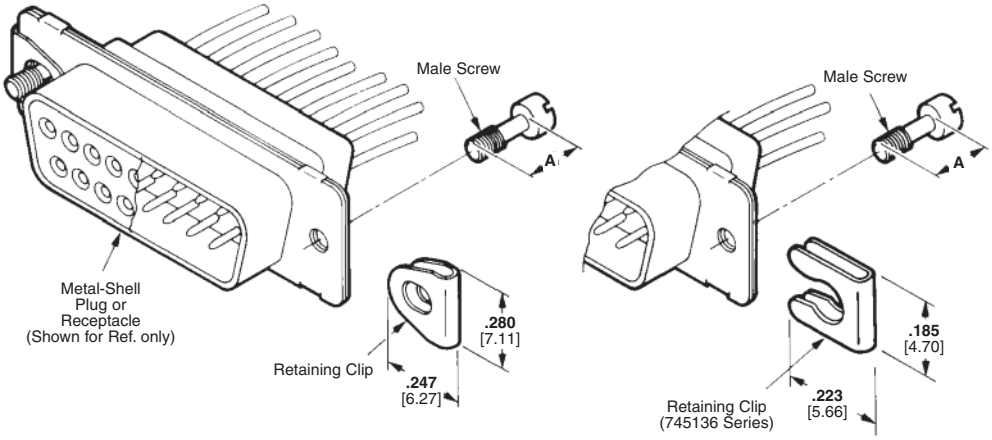

Male Screw Finish	Thread Size	Dimension A	Male Screw Retainer Kit No. Individual	Male Screw Retainer Kit No. Bulk Packed*
Yellow Chromate	4-40	**.220** 5.59	5205980-1	5205980-3
		.200 5.08	5745136-1	5745136-2
	M3 (Metric)	**.225** 5.72	5207871-1	—
Clear Chromate	4-40	**.220** 5.59	5205980-4	5205980-5
		.200 5.08	5745136-3	5745136-4

*Each part is individually bulk packed for multiple kit orders.

Notes: 1. All parts are packaged unassembled.
2. Each kit is comprised of two male screws and two retaining clips. Male screw retainers are also furnished as part of cable clamp kits (pages 8-95 and 8-96).

Notes: 3. Male screw retainers mate with female screwlocks (page 8-95) and with metal-shell board mount connectors featuring 4-40 threaded inserts or female screwlocks.

Notes: 4. Retaining clip must be assembled onto connector flanges with threaded hole toward wire side of connector.

Stainless Steel Kit

Materials

All Parts — Stainless steel, passivated per QQ-P-35B.

AMP Part Number 211883-5 or MIL Part Number M24308/25-6P

Notes:
1. Each kit includes two screws and two retainers.
2. Retainer is assembled onto connector flange with threaded hole toward the wire side of the connector.

Male Screw Retainer Kits

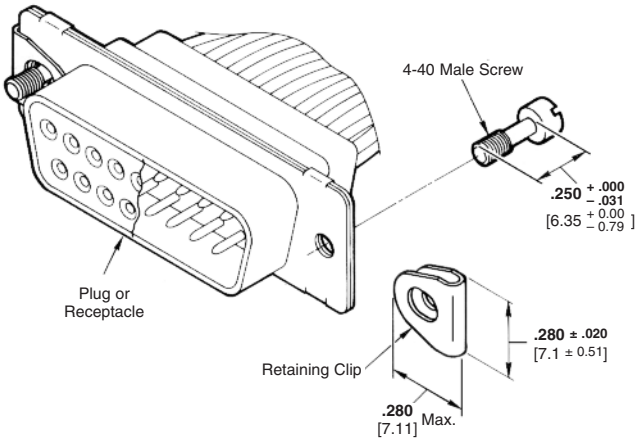

AMPLIMITE Connectors (Continued)

Accessories (Continued)

Standard Bushings (for Connectors with Straight Posted Contacts, PC Board Mounted)

Material
Aluminum

Kit Numbers
*Parts are individually bulk packed for multiple kit orders.

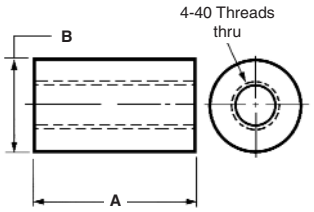

Note: Standoff Bushings are used with a plug or receptacle of PC board mounted connectors.

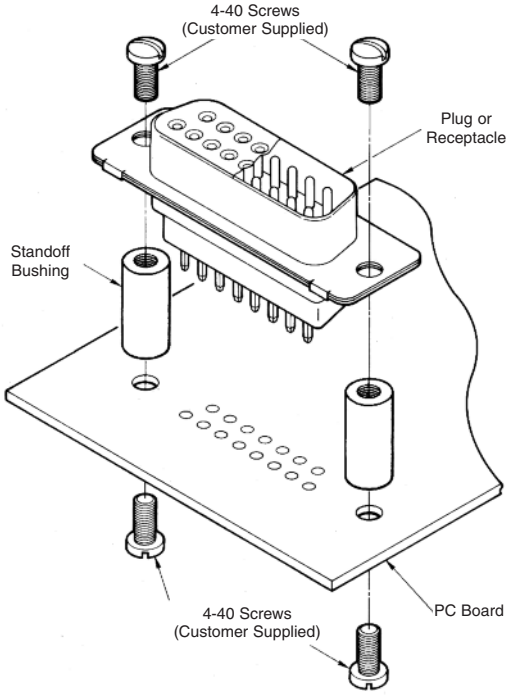

Part No.	Dim. A	Dim. B	Packaged
5205933-3	**.435** 11.05	**.250** 6.35	2 Per Bag
5205933-4	**.435** 11.05	**.250** 6.35	*Bulked Pack
443279-2	**.246** 6.25	**.190** 4.83	2 Per Bag
443279-3	**.246** 6.25	**.190** 4.83	*Bulk Pack

Dust Covers

Dust covers for subminiature D connectors are not manufactured by TE Connectivity. They may be purchased from:**

Caplugs
2150 Elmwood Avenue
Buffalo, NY 14207
Phone: (716) 876-9855
Fax: (716) 874-1680

See Catalog 1307612 for additional hardware such as cable clamps, strain reliefs, etc.

Notes:

1. There are no cable clamp/strain relief hardware available for size 6 connectors.
2. Cable clamp/strain relief hardware cannot be used with the Power/Coax/Combination Product shown on pages 8-62 to 8-64 of this catalog.

** Caplugs is not an affiliate of TE.

EMI/RFI Gaskets

Material and Finish
Brass, .006 [0.15] thick; bright tin-lead plated

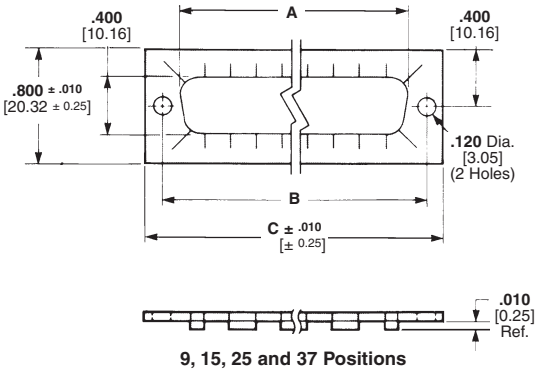

9, 15, 25 and 37 Positions

Shell Size (No. of Contact Pos.)	Dimensions A	Dimensions B	Dimensions C	Gasket Part No.
1 (9)	**.746** 18.95	**.984** 24.99	**1.220** 30.99	747024-3
2 (15)	**1.074** 27.28	**1.312** 33.32	**1.555** 39.50	747025-3
3 (25)	**1.614** 41.00	**1.852** 47.04	**2.100** 53.34	745776-3
4 (37)	**2.266** 57.56	**2.500** 63.50	**2.730** 69.34	745777-3

Dimensions are shown for reference purposes only. Specifications subject to change.

Dimensions are in millimeters unless otherwise specified.

USA: +1 800 522 6752
Asia Pacific: +86 0 400 820 6015
UK: +44 800 267 666

For additional support numbers please visit www.te.com

AMPLIMITE Connectors (Continued)

Accessories (Continued)

Shielded Cable Clamps 45° Exit

Product Facts

- **Dual cable entry**
- **Rugged and durable diecast construction**
- **Available in 9 to 37 way (shell sizes 1 to 4)**
- **Choice of screw cable clamp or crimped ferrule**
- **Blanking plate included for single cable entry applications**
- **Supplied with jackscrews for locking with mating connector**

Material and Finish

Cable Clamp Housing — Zinc alloy, plated bright nickel

Screws and Cable Clamps — Steel, zinc plate with supplementary chromate

Dummy Plate — Steel

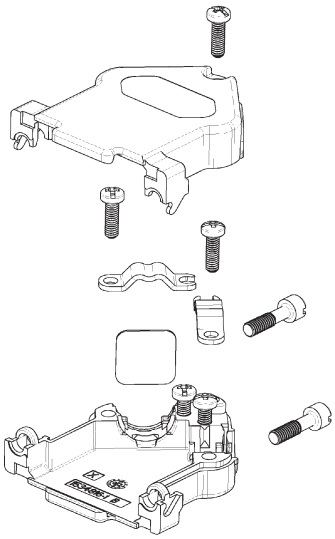

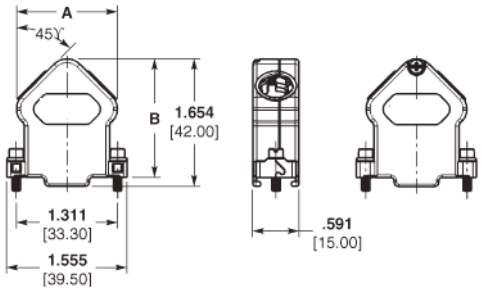

Shell Size	Dimensions A	Dimensions B	Max. Cable Dia.	4-40 Mounting Screw	Cable Clamp Kit No.	Cable Clamp Kit No. for Coax Contacts
1	**1.063** 27.00	**1.378** 35.00	**.354** 9.00	Phillips Head	1534805-1	—
				Hex Head	1534805-2	—
			.365 9.27	Phillips Head	—	1534806-1
				Hex Head	—	1534806-2
2	**1.299** 33.00	**1.535** 39.00	**.433** 11.00	Phillips Head	1534807-1	—
				Hex Head	1534807-2	—
			.430 10.92	Phillips Head	—	1534808-1
				Hex Head	—	1534808-2

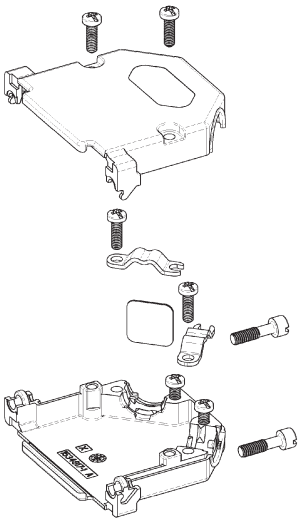

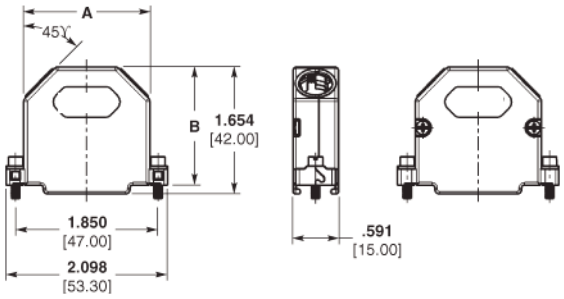

Shell Size	Dimensions A	Dimensions B	Max. Cable Dia.	4-40 Mounting Screw	Cable Clamp Kit No.	Cable Clamp Kit No. for Coax Contacts
3	**1.642** 41.70	**1.535** 39.00	**.433** 11.00	Phillips Head	1534809-1	—
				Hex Head	1534809-2	—
			.430 10.92	Phillips Head	—	1534810-1
				Hex Head	—	1534810-2
4	**2.291** 58.20	**1.535** 39.00	**.433** 11.00	Phillips Head	1534811-1	—
				Hex Head	1534811-2	—
			.430 10.92	Phillips Head	—	1534812-1
				Hex Head	—	1534812-2

Dimensions are shown for reference purposes only. Specifications subject to change.

Dimensions are in millimeters unless otherwise specified.

USA: +1 800 522 6752
Asia Pacific: +86 0 400 820 6015
UK: +44 800 267 666

For additional support numbers please visit www.te.com

AMPLIMITE Connectors vs. MIL-DTL-24308 Cross Reference

This list is provided for reference only. In the event that a discrepancy exists between this catalog and the respective military QPL, then the QPL shall take precedence.

MILITARY PART NUMBER FOR ORDERING	MILITARY PART NUMBER ON CONNECTOR	AMP PART NUMBER FOR ORDERING	AMP PART NUMBER ON CONNECTOR	REMARKS (All connectors provided with contacts unless otherwise specified)
/1 M24308/1-1F	M24308/1-1F	593007-1	593007-1	
M24308/1-2F	M24308/1-2F	593007-2	593007-2	
M24308/1-3F	M24308/1-3F	593007-3	593007-3	
M24308/1-4F	M24308/1-4F	593007-4	593007-4	
M24308/1-5F	M24308/1-5F	593007-5	593007-5	
M24308/1-12F	M24308/1-12F	593008-1	593008-1	
M24308/1-13F	M24308/1-13F	593008-2	593008-2	
M24308/1-14F	M24308/1-14F	593008-3	593008-3	
M24308/1-15F	M24308/1-15F	593008-4	593008-4	
M24308/1-16F	M24308/1-16F	593008-5	593008-5	
M24308/1-23F	M24308/1-23F	593009-1	593009-1	
M24308/1-24F	M24308/1-24F	593009-2	593009-2	
M24308/1-25F	M24308/1-25F	593009-3	593009-3	
M24308/1-26F	M24308/1-26F	593009-4	593009-4	
M24308/1-27F	M24308/1-27F	593009-5	593009-5	
/2 M24308/2-1F	M24308/2-1F	205555-2	205555-2	
M24308/2-2F	M24308/2-2F	205557-2	205557-2	
M24308/2-3F	M24308/2-3F	205559-2	205559-2	
M24308/2-4F	M24308/2-4F	205561-2	205561-2	
M24308/2-5F	M24308/2-5F	205563-2	205563-2	
M24308/2-6F	M24308/2-1F	205555-3	205555-2	WITH TOOL
M24308/2-7F	M24308/2-2F	205557-3	205557-2	WITH TOOL
M24308/2-8F	M24308/2-3F	205559-3	205559-2	WITH TOOL
M24308/2-9F	M24308/2-4F	205561-3	205561-2	WITH TOOL
M24308/2-10F	M24308/2-5F	205563-3	205563-2	WITH TOOL
M24308/2-11F	M24308/2-11F	204512-2	204512-2	
M24308/2-12F	M24308/2-12F	204514-2	204514-2	
M24308/2-13F	M24308/2-13F	204516-2	204516-2	
M24308/2-14F	M24308/2-14F	204518-2	204518-2	
M24308/2-15F	M24308/2-15F	204520-2	204520-2	
M24308/2-16F	M24308/2-16F	204522-2	204522-2	
M24308/2-17F	M24308/2-11F	204512-3	204512-2	WITH TOOL
M24308/2-18F	M24308/2-12F	204514-3	204514-2	WITH TOOL
M24308/2-19F	M24308/2-13F	204516-3	204516-2	WITH TOOL
M24308/2-20F	M24308/2-14F	204518-3	204518-2	WITH TOOL
M24308/2-21F	M24308/2-15F	204520-3	204520-2	WITH TOOL
M24308/2-22F	M24308/2-16F	204522-3	204522-2	WITH TOOL
M24308/2-23F	M24308/2-23F	205483-2	205483-2	
M24308/2-24F	M24308/2-24F	205433-2	205433-2	
M24308/2-25F	M24308/2-25F	205484-2	205484-2	
M24308/2-26F	M24308/2-26F	205485-2	205485-2	
M24308/2-27F	M24308/2-27F	205432-2	205432-2	
M24308/2-28F	M24308/2-28F	204536-2	204536-2	
M24308/2-29F	M24308/2-29F	204538-2	204538-2	
M24308/2-30F	M24308/2-30F	204540-2	204540-2	
M24308/2-31F	M24308/2-31F	204542-2	204542-2	
M24308/2-32F	M24308/2-32F	204544-2	204544-2	
M24308/2-33F	M24308/2-33F	204546-2	204546-2	
M24308/2-281F	M24308/2-1F	205161-1	205555-2	LESS CONTACTS
M24308/2-282F	M24308/2-2F	205163-1	205557-2	LESS CONTACTS
M24308/2-283F	M24308/2-3F	205165-1	205559-2	LESS CONTACTS
M24308/2-284F	M24308/2-4F	205167-1	205561-2	LESS CONTACTS
M24308/2-285F	M24308/2-5F	205169-1	205563-2	LESS CONTACTS
M24308/2-286F	M24308/2-11F	204500-1	204512-2	LESS CONTACTS
M24308/2-287F	M24308/2-12F	204502-1	204514-2	LESS CONTACTS
M24308/2-288F	M24308/2-13F	204504-1	204516-2	LESS CONTACTS
M24308/2-289F	M24308/2-14F	204506-1	204518-2	LESS CONTACTS
M24308/2-290F	M24308/2-15F	204508-1	204520-2	LESS CONTACTS
M24308/2-291F	M24308/2-16F	204510-1	204522-2	LESS CONTACTS

Note: The suffix “F” on M24308 part numbers designates cadmium shell plating.

Dimensions are shown for reference purposes only. Specifications subject to change.

Dimensions are in millimeters unless otherwise specified.

USA: +1 800 522 6752
Asia Pacific: +86 0 400 820 6015
UK: +44 800 267 666

For additional support numbers please visit www.te.com

AMPLIMITE Connectors vs. MIL-DTL-24308 Cross Reference (Continued)

	MILITARY PART NUMBER FOR ORDERING	MILITARY PART NUMBER ON CONNECTOR	AMP PART NUMBER FOR ORDERING	AMP PART NUMBER ON CONNECTOR	REMARKS (All connectors provided with contacts unless otherwise specified)
/2	M24308/2-292F	M24308/2-23F	205416-1	205483-2	LESS CONTACTS
	M24308/2-293F	M24308/2-24F	205417-1	205433-2	LESS CONTACTS
	M24308/2-294F	M24308/2-25F	205418-1	205484-2	LESS CONTACTS
	M24308/2-295F	M24308/2-26F	205419-1	205485-2	LESS CONTACTS
	M24308/2-296F	M24308/2-27F	205420-1	205432-2	LESS CONTACTS
	M24308/2-297F	M24308/2-28F	204524-1	204536-2	LESS CONTACTS
	M24308/2-298F	M24308/2-29F	204526-1	204538-2	LESS CONTACTS
	M24308/2-299F	M24308/2-30F	204528-1	204540-2	LESS CONTACTS
	M24308/2-300F	M24308/2-31F	204530-1	204542-2	LESS CONTACTS
	M24308/2-301F	M24308/2-32F	204532-1	204544-2	LESS CONTACTS
	M24308/2-302F	M24308/2-33F	204534-1	204546-2	LESS CONTACTS
	M24308/2-342F	M24308/2-342F	211525-2	211525-2	
	M24308/2-343F	M24308/2-343F	211526-2	211526-2	
	M24308/2-344F	M24308/2-344F	211527-2	211527-2	
	M24308/2-345F	M24308/2-345F	211528-2	211528-2	
	M24308/2-346F	M24308/2-346F	211529-2	211529-2	
	M24308/2-347F	M24308/2-347F	211536-2	211536-2	
	M24308/2-348F	M24308/2-348F	211537-2	211537-2	
	M24308/2-349F	M24308/2-349F	211538-2	211538-2	
	M24308/2-350F	M24308/2-350F	211539-2	211539-2	
	M24308/2-351F	M24308/2-351F	211540-2	211540-2	
	M24308/2-352F	M24308/2-352F	211541-2	211541-2	
	M24308/2-482F	M24308/2-342F	211525-1	211525-2	LESS CONTACTS
	M24308/2-483F	M24308/2-343F	211526-1	211526-2	LESS CONTACTS
	M24308/2-484F	M24308/2-344F	211527-1	211527-2	LESS CONTACTS
	M24308/2-485F	M24308/2-345F	211528-1	211528-2	LESS CONTACTS
	M24308/2-486F	M24308/2-346F	211529-1	211529-2	LESS CONTACTS
	M24308/2-487F	M24308/2-347F	211536-1	211536-2	LESS CONTACTS
	M24308/2-488F	M24308/2-348F	211537-1	211537-2	LESS CONTACTS
	M24308/2-489F	M24308/2-349F	211538-1	211538-2	LESS CONTACTS
	M24308/2-490F	M24308/2-350F	211539-1	211539-2	LESS CONTACTS
	M24308/2-491F	M24308/2-351F	211540-1	211540-2	LESS CONTACTS
	M24308/2-492F	M24308/2-352F	211541-1	211541-2	LESS CONTACTS
/3	M24308/3-1F	M24308/3-1F	593002-1	593002-1	
	M24308/3-2F	M24308/3-2F	593002-2	593002-2	
	M24308/3-3F	M24308/3-3F	593002-3	593002-3	
	M24308/3-4F	M24308/3-4F	593002-4	593002-4	
	M24308/3-5F	M24308/3-5F	593002-5	593002-5	
	M24308/3-12F	M24308/3-12F	593004-1	593004-1	
	M24308/3-13F	M24308/3-13F	593004-2	593004-2	
	M24308/3-14F	M24308/3-14F	593004-3	593004-3	
	M24308/3-15F	M24308/3-15F	593004-4	593004-4	
	M24308/3-16F	M24308/3-16F	593004-5	593004-5	
/4	M24308/4-1F	M24308/4-1F	205556-2	205556-2	
	M24308/4-2F	M24308/4-2F	205558-2	205558-2	
	M24308/4-3F	M24308/4-3F	205560-2	205560-2	
	M24308/4-4F	M24308/4-4F	205562-2	205562-2	
	M24308/4-5F	M24308/4-5F	205564-2	205564-2	
	M24308/4-6F	M24308/4-1F	205556-3	205556-2	WITH TOOL
	M24308/4-7F	M24308/4-2F	205558-3	205558-2	WITH TOOL
	M24308/4-8F	M24308/4-3F	205560-3	205560-2	WITH TOOL
	M24308/4-9F	M24308/4-4F	205562-3	205562-2	WITH TOOL
	M24308/4-10F	M24308/4-5F	205564-3	205564-2	WITH TOOL
	M24308/4-11F	M24308/4-11F	204513-2	204513-2	
	M24308/4-12F	M24308/4-12F	204515-2	204515-2	
	M24308/4-13F	M24308/4-13F	204517-2	204517-2	
	M24308/4-14F	M24308/4-14F	204519-2	204519-2	
	M24308/4-15F	M24308/4-15F	204521-2	204521-2	
	M24308/4-16F	M24308/4-16F	204523-2	204523-2	

Note: The suffix “F” on M24308 part numbers designates cadmium shell plating.

AMPLIMITE Connectors vs. MIL-DTL-24308 Cross Reference (Continued)

	MILITARY PART NUMBER FOR ORDERING	MILITARY PART NUMBER ON CONNECTOR	AMP PART NUMBER FOR ORDERING	AMP PART NUMBER ON CONNECTOR	REMARKS (All connectors provided with contacts unless otherwise specified)
/4	M24308/4-17F	M24308/4-11F	204513-3	204513-2	WITH TOOL
	M24308/4-18F	M24308/4-12F	204515-3	204515-2	WITH TOOL
	M24308/4-19F	M24308/4-13F	204517-3	204517-2	WITH TOOL
	M24308/4-20F	M24308/4-14F	204519-3	204519-2	WITH TOOL
	M24308/4-21F	M24308/4-15F	204521-3	204521-2	WITH TOOL
	M24308/4-22F	M24308/4-16F	204523-3	204523-2	WITH TOOL
	M24308/4-259F	M24308/4-1F	205162-1	205556-2	LESS CONTACTS
	M24308/4-260F	M24308/4-2F	205164-1	205558-2	LESS CONTACTS
	M24308/4-261F	M24308/4-3F	205166-1	205560-2	LESS CONTACTS
	M24308/4-262F	M24308/4-4F	205168-1	205562-2	LESS CONTACTS
	M24308/4-263F	M24308/4-5F	205170-1	205564-2	LESS CONTACTS
	M24308/4-264F	M24308/4-11F	204501-1	204513-2	LESS CONTACTS
	M24308/4-265F	M24308/4-12F	204503-1	204515-2	LESS CONTACTS
	M24308/4-266F	M24308/4-13F	204505-1	204517-2	LESS CONTACTS
	M24308/4-267F	M24308/4-14F	204507-1	204519-2	LESS CONTACTS
	M24308/4-268F	M24308/4-15F	204509-1	204521-2	LESS CONTACTS
	M24308/4-269F	M24308/4-16F	204511-1	204523-2	LESS CONTACTS
	M24308/4-302F	M24308/4-302F	205486-2	205486-2	
	M24308/4-303F	M24308/4-303F	205409-2	205409-2	
	M24308/4-304F	M24308/4-304F	205487-2	205487-2	
	M24308/4-305F	M24308/4-305F	205488-2	205488-2	
	M24308/4-306F	M24308/4-306F	205431-2	205431-2	
	M24308/4-307F	M24308/4-307F	204537-2	204537-2	
	M24308/4-308F	M24308/4-308F	204539-2	204539-2	
	M24308/4-309F	M24308/4-309F	204541-2	204541-2	
	M24308/4-310F	M24308/4-310F	204543-2	204543-2	
	M24308/4-311F	M24308/4-311F	204545-2	204545-2	
	M24308/4-312F	M24308/4-312F	204547-2	204547-2	
	M24308/4-324F	M24308/4-302F	205412-1	205486-2	LESS CONTACTS
	M24308/4-325F	M24308/4-303F	205408-1	205409-2	LESS CONTACTS
	M24308/4-326F	M24308/4-304F	205413-1	205487-2	LESS CONTACTS
	M24308/4-327F	M24308/4-305F	205414-1	205488-2	LESS CONTACTS
	M24308/4-328F	M24308/4-306F	205415-1	205431-2	LESS CONTACTS
	M24308/4-329F	M24308/4-307F	204525-1	204537-2	LESS CONTACTS
	M24308/4-330F	M24308/4-308F	204527-1	204539-2	LESS CONTACTS
	M24308/4-331F	M24308/4-309F	204529-1	204541-2	LESS CONTACTS
	M24308/4-332F	M24308/4-310F	204531-1	204543-2	LESS CONTACTS
	M24308/4-333F	M24308/4-311F	204533-1	204545-2	LESS CONTACTS
	M24308/4-334F	M24308/4-312F	204535-1	204547-2	LESS CONTACTS
/5	M24308/5-1F	M24308/5-1F	593036-1	593036-1	
	M24308/5-2F	M24308/5-2F	593036-2	593036-2	
	M24308/5-3F	M24308/5-3F	593036-3	593036-3	
	M24308/5-4F	M24308/5-4F	593036-4	593036-4	
	M24308/5-5F	M24308/5-5F	593036-5	593036-5	
	M24308/5-12F	M24308/5-12F	593037-1	593037-1	
	M24308/5-13F	M24308/5-13F	593037-2	593037-2	
	M24308/5-14F	M24308/5-14F	593037-3	593037-3	
	M24308/5-15F	M24308/5-15F	593037-4	593037-4	
	M24308/5-16F	M24308/5-16F	593037-5	593037-5	
	M24308/5-23F	M24308/5-23F	593038-1	593038-1	
	M24308/5-24F	M24308/5-24F	593038-2	593038-2	
	M24308/5-25F	M24308/5-25F	593038-3	593038-3	
	M24308/5-26F	M24308/5-26F	593038-4	593038-4	
	M24308/5-27F	M24308/5-27F	593038-5	593038-5	
/23	M24308/23-1F	M24308/23-1F	443975-1	443975-1	
	M24308/23-2F	M24308/23-2F	443975-2	443975-2	
	M24308/23-3F	M24308/23-3F	443975-3	443975-3	
	M24308/23-4F	M24308/23-4F	443975-4	443975-4	
	M24308/23-5F	M24308/23-5F	443975-5	443975-5	

Note: The suffix "F" on M24308 part numbers designates cadmium shell plating.

AMPLIMITE Connectors vs. MIL-DTL-24308 Cross Reference (Continued)

	MILITARY PART NUMBER FOR ORDERING	MILITARY PART NUMBER ON CONNECTOR	AMP PART NUMBER FOR ORDERING	AMP PART NUMBER ON CONNECTOR	REMARKS (All connectors provided with contacts unless otherwise specified)
/23	M24308/23-7F	M24308/23-7F	443976-1	443976-1	
	M24308/23-8F	M24308/23-8F	443976-2	443976-2	
	M24308/23-9F	M24308/23-9F	443976-3	443976-3	
	M24308/23-10F	M24308/23-10F	443976-4	443976-4	
	M24308/23-11F	M24308/23-11F	443976-5	443976-5	
	M24308/23-13F	M24308/23-13F	443977-1	443977-1	
	M24308/23-14F	M24308/23-14F	443977-2	443977-2	
	M24308/23-15F	M24308/23-15F	443977-3	443977-3	
	M24308/23-16F	M24308/23-16F	443977-4	443977-4	
	M24308/23-17F	M24308/23-17F	443977-5	443977-5	
	M24308/23-19F	M24308/23-19F	443978-1	443978-1	
	M24308/23-20F	M24308/23-20F	443978-2	443978-2	
	M24308/23-21F	M24308/23-21F	443978-3	443978-3	
	M24308/23-22F	M24308/23-22F	443978-4	443978-4	
	M24308/23-23F	M24308/23-23F	443978-5	443978-5	
	M24308/23-25F	M24308/23-25F	1218434-1	1218434-1	
	M24308/23-26F	M24308/23-26F	1218434-2	1218434-2	
	M24308/23-27F	M24308/23-27F	1218434-3	1218434-3	
	M24308/23-28F	M24308/23-28F	1218434-4	1218434-4	
	M24308/23-29F	M24308/23-29F	1218434-5	1218434-5	
	M24308/23-31F	M24308/23-31F	1218408-1	1218408-1	
	M24308/23-32F	M24308/23-32F	1218408-2	1218408-2	
	M24308/23-33F	M24308/23-33F	1218408-3	1218408-3	
	M24308/23-34F	M24308/23-34F	1218408-4	1218408-4	
	M24308/23-35F	M24308/23-35F	1218408-5	1218408-5	
	M24308/23-37F	M24308/23-37F	1218435-1	1218435-1	
	M24308/23-38F	M24308/23-38F	1218435-2	1218435-2	
	M24308/23-39F	M24308/23-39F	1218435-3	1218435-3	
	M24308/23-40F	M24308/23-40F	1218435-4	1218435-4	
	M24308/23-41F	M24308/23-41F	1218435-5	1218435-5	
	M24308/23-43F	M24308/23-43F	1218436-1	1218436-1	
	M24308/23-44F	M24308/23-44F	1218436-2	1218436-2	
	M24308/23-45F	M24308/23-45F	1218436-3	1218436-3	
	M24308/23-46F	M24308/23-46F	1218436-4	1218436-4	
	M24308/23-47F	M24308/23-47F	1218436-5	1218436-5	
	M24308/23-49F	M24308/23-49F	1218437-1	1218437-1	
	M24308/23-50F	M24308/23-50F	1218437-2	1218437-2	
	M24308/23-51F	M24308/23-51F	1218437-3	1218437-3	
	M24308/23-52F	M24308/23-52F	1218437-4	1218437-4	
	M24308/23-53F	M24308/23-53F	1218437-5	1218437-5	
	M24308/23-55F	M24308/23-55F	1218438-1	1218438-1	
	M24308/23-56F	M24308/23-56F	1218438-2	1218438-2	
	M24308/23-57F	M24308/23-57F	1218438-3	1218438-3	
	M24308/23-58F	M24308/23-58F	1218438-4	1218438-4	
	M24308/23-59F	M24308/23-59F	1218438-5	1218438-5	
/24	M24308/24-1F	M24308/24-1F	1218124-1	1218124-1	
	M24308/24-2F	M24308/24-2F	1218124-2	1218124-2	
	M24308/24-3F	M24308/24-3F	1218124-3	1218124-3	
	M24308/24-4F	M24308/24-4F	1218124-4	1218124-4	
	M24308/24-5F	M24308/24-5F	1218124-5	1218124-5	
	M24308/24-7F	M24308/24-7F	1218125-1	1218125-1	
	M24308/24-8F	M24308/24-8F	1218125-2	1218125-2	
	M24308/24-9F	M24308/24-9F	1218125-3	1218125-3	
	M24308/24-10F	M24308/24-10F	1218125-4	1218125-4	
	M24308/24-11F	M24308/24-11F	1218125-5	1218125-5	
	M24308/24-13F	M24308/24-13F	1218126-1	1218126-1	
	M24308/24-14F	M24308/24-14F	1218126-2	1218126-2	
	M24308/24-15F	M24308/24-15F	1218126-3	1218126-3	
	M24308/24-16F	M24308/24-16F	1218126-4	1218126-4	
	M24308/24-17F	M24308/24-17F	1218126-5	1218126-5	

Dimensions are shown for reference purposes only. Specifications subject to change.

Dimensions are in millimeters unless otherwise specified.

USA: +1 800 522 6752
Asia Pacific: +86 0 400 820 6015
UK: +44 800 267 666

For additional support numbers please visit www.te.com

AMPLIMITE Connectors vs. MIL-DTL-24308 Cross Reference (Continued)

	MILITARY PART NUMBER FOR ORDERING	MILITARY PART NUMBER ON CONNECTOR	AMP PART NUMBER FOR ORDERING	AMP PART NUMBER ON CONNECTOR	REMARKS (All connectors provided with contacts unless otherwise specified)
/24	M24308/24-19F	M24308/24-19F	1218127-1	1218127-1	
	M24308/24-20F	M24308/24-20F	1218127-2	1218127-2	
	M24308/24-21F	M24308/24-21F	1218127-3	1218127-3	
	M24308/24-22F	M24308/24-22F	1218127-4	1218127-4	
	M24308/24-23F	M24308/24-23F	1218127-5	1218127-5	
	M24308/24-25F	M24308/24-25F	1218440-1	1218440-1	
	M24308/24-26F	M24308/24-26F	1218440-2	1218440-2	
	M24308/24-27F	M24308/24-27F	1218440-3	1218440-3	
	M24308/24-28F	M24308/24-28F	1218440-4	1218440-4	
	M24308/24-29F	M24308/24-29F	1218440-5	1218440-5	
	M24308/24-31F	M24308/24-31F	1218441-1	1218441-1	
	M24308/24-32F	M24308/24-32F	1218441-2	1218441-2	
	M24308/24-33F	M24308/24-33F	1218441-3	1218441-3	
	M24308/24-34F	M24308/24-34F	1218441-4	1218441-4	
	M24308/24-35F	M24308/24-35F	1218441-5	1218441-5	
	M24308/24-37F	M24308/24-37F	1218442-1	1218442-1	
	M24308/24-38F	M24308/24-38F	1218442-2	1218442-2	
	M24308/24-39F	M24308/24-39F	1218442-3	1218442-3	
	M24308/24-40F	M24308/24-40F	1218442-4	1218442-4	
	M24308/24-41F	M24308/24-41F	1218442-5	1218442-5	
	M24308/24-43F	M24308/24-43F	1218443-1	1218443-1	
	M24308/24-44F	M24308/24-44F	1218443-2	1218443-2	
	M24308/24-45F	M24308/24-45F	1218443-3	1218443-3	
	M24308/24-46F	M24308/24-46F	1218443-4	1218443-4	
	M24308/24-47F	M24308/24-47F	1218443-5	1218443-5	
	M24308/24-49F	M24308/24-49F	1218444-1	1218444-1	
	M24308/24-50F	M24308/24-50F	1218444-2	1218444-2	
	M24308/24-51F	M24308/24-51F	1218444-3	1218444-3	
	M24308/24-52F	M24308/24-52F	1218444-4	1218444-4	
	M24308/24-53F	M24308/24-53F	1218444-5	1218444-5	
	M24308/24-55F	M24308/24-55F	1218445-1	1218445-1	
	M24308/24-56F	M24308/24-56F	1218445-2	1218445-2	
	M24308/24-57F	M24308/24-57F	1218445-3	1218445-3	
	M24308/24-58F	M24308/24-58F	1218445-4	1218445-4	
	M24308/24-59F	M24308/24-59F	1218445-5	1218445-5	
/25	M24308/25-6P	—	211883-5	—	Male screw retainer kit
/26	M24308/26-1P	—	212447-1	—	Female screwlock kit
	M24308/26-1	—	205817-8	—	Female screwlock kit

Note: The suffix “F” on M24308 part numbers designates cadmium shell plating.
The suffix “P” designates passivated stainless steel.

AMPLIMITE Connectors vs. M39029, M22520 and M81969 Cross Reference

MILITARY PART NUMBER FOR ORDERING	AMP PART NUMBER FOR ORDERING	REMARKS (All connectors provided with contacts unless otherwise specified)
M39029/57-354	204351-1	Size 22 Socket
M39029/58-360	204370-2	Size 22 Pin
M39029/63-368	205090-1	Size 20 Socket
M39029/64-369	205089-1	Size 20 Pin
M22520/2-01	601966-1	Crimp Tool
M22520/2-06	601966-4	Size 22 Socket Positioner
M22520/2-08	601966-5	Size 20 Positioner
M22520/2-09	601966-6	Size 22 Pin Positioner
M81969/1-02	91067-2	Size 20 Ins/Ext Tool
M81969/1-04	91067-1	Size 22 Ins/Ext Tool

AMPLIMITE Connectors vs. NASA Power/Coax/Signal Combination Cross Reference

AMP PART NUMBER	ASSEMBLY NASA P/N 311-P-4/	DESCRIPTION
448153-2	05-7P-B-12	PLUG,3C3,NON-MAG,.120 MTG HOLE
448153-3	05-7P-B-15	PLUG,3C3,NON-MAG,.154 MTG HOLE
448154-2	05-8P-B-12	PLUG,7C2,NON-MAG,.120 MTG HOLE
448154-3	05-8P-B-15	PLUG,7C2,NON-MAG,.154 MTG HOLE
211111-2	05-9P-B-12	PLUG,11C1,NON-MAG,.120 MTG HOLE
211111-3	05-9P-B-15	PLUG,11C1,NON-MAG,.154 MTG HOLE
212491-6	05-10P-B-12	PLUG,5C5,NON-MAG,.120 MTG HOLE
212491-7	05-10P-B-15	PLUG,5C5,NON-MAG,.154 MTG HOLE
212498-2	05-11P-B-12	PLUG,9C4,NON-MAG,.120 MTG HOLE
212498-3	05-11P-B-15	PLUG,9C4,NON-MAG,.154 MTG HOLE
208810-3	05-12P-B-12	PLUG,13C3,NON-MAG,.120 MTG HOLE
208810-4	05-12P-B-15	PLUG,13C3,NON-MAG,.154 MTG HOLE
212506-2	05-13P-B-12	PLUG,17C2,NON-MAG,.120 MTG HOLE
212506-4	05-13P-B-15	PLUG,17C2,NON-MAG,.154 MTG HOLE
212522-3	05-14P-B-12	PLUG,21C1,NON-MAG,.120 MTG HOLE
212522-4	05-14P-B-15	PLUG,21C1,NON-MAG,.154 MTG HOLE
446405-2	05-15P-B-12	PLUG,8C8,NON-MAG,.120 MTG HOLE
446405-3	05-15P-B-15	PLUG,8C8,NON-MAG,.154 MTG HOLE
212514-3	05-17P-B-12	PLUG,17C5,NON-MAG,.120 MTG HOLE
212514-4	05-17P-B-15	PLUG,17C5,NON-MAG,.154 MTG HOLE
212530-2	05-18P-B-12	PLUG,21C4,NON-MAG,.120 MTG HOLE
212530-3	05-18P-B-15	PLUG,21C4,NON-MAG,.154 MTG HOLE
208742-2	05-20P-B-12	PLUG,25C3,NON-MAG,.120 MTG HOLE
208742-3	05-20P-B-15	PLUG,25C3,NON-MAG,.154 MTG HOLE
212538-2	05-21P-B-12	PLUG,27C2,NON-MAG,.120 MTG HOLE
212538-3	05-21P-B-15	PLUG,27C2,NON-MAG,.154 MTG HOLE
208743-2	05-22P-B-12	PLUG,24C7,NON-MAG,.120 MTG HOLE
208743-6	05-22P-B-15	PLUG,24C7,NON-MAG,.154 MTG HOLE
208744-3	05-23P-B-12	PLUG,36C4,NON-MAG,.120 MTG HOLE
208744-4	05-23P-B-15	PLUG,36C4,NON-MAG,.154 MTG HOLE
445705-2	05-7S-B-12	RECPT,3C3,NON-MAG,.120 MTG HOLE
445705-3	05-7S-B-15	RECPT,3C3,NON-MAG,.154 MTG HOLE
211112-2	05-9S-B-12	RECPT,11C1,NON-MAG,.120 MTG HOLE
211112-3	05-9S-B-15	RECPT,11C1,NON-MAG,.154 MTG HOLE
212059-2	05-10S-B-12	RECPT,5C5,NON-MAG,.120 MTG HOLE
212059-6	05-10S-B-15	RECPT,5C5,NON-MAG,.154 MTG HOLE
212502-2	05-11S-B-12	RECPT,9C4,NON-MAG,.120 MTG HOLE
212502-3	05-11S-B-15	RECPT,9C4,NON-MAG,.154 MTG HOLE
208811-3	05-12S-B-12	RECPT,13C3,NON-MAG,.120 MTG HOLE
208811-4	05-12S-B-15	RECPT,13C3,NON-MAG,.154 MTG HOLE
212510-2	05-13S-B-12	RECPT,17C2,NON-MAG,.120 MTG HOLE
212510-3	05-13S-B-15	RECPT,17C2,NON-MAG,.154 MTG HOLE
212526-3	05-14S-B-12	RECPT,21C1,NON-MAG,.120 MTG HOLE
212526-4	05-14S-B-15	RECPT,21C1,NON-MAG,.154 MTG HOLE
445730-3	05-15S-B-12	RECPT,8C8,NON-MAG,.120 MTG HOLE
445730-4	05-15S-B-15	RECPT,8C8,NON-MAG,.154 MTG HOLE
212518-3	05-17S-B-12	RECPT,17C5,NON-MAG,.120 MTG HOLE
212518-4	05-17S-B-15	RECPT,17C5,NON-MAG,.154 MTG HOLE
212534-2	05-18S-B-12	RECPT,21C4,NON-MAG,.120 MTG HOLE
212534-3	05-18S-B-15	RECPT,21C4,NON-MAG,.154 MTG HOLE
208551-2	05-20S-B-12	RECPT,25C3,NON-MAG,.120 MTG HOLE
208551-3	05-20S-B-15	RECPT,25C3,NON-MAG,.154 MTG HOLE
212542-2	05-21S-B-12	RECPT,27C2,NON-MAG,.120 MTG HOLE
212542-3	05-21S-B-15	RECPT,27C2,NON-MAG,.154 MTG HOLE
208552-2	05-22S-B-12	RECPT,24C7,NON-MAG,.120 MTG HOLE
208552-5	05-22S-B-15	RECPT,24C7,NON-MAG,.154 MTG HOLE
208550-2	05-23S-B-12	RECPT,36C4,NON-MAG,.120 MTG HOLE
208550-3	05-23S-B-15	RECPT,36C4,NON-MAG,.154 MTG HOLE

Dimensions are shown for reference purposes only. Specifications subject to change.

Dimensions are in millimeters unless otherwise specified.

USA: +1 800 522 6752
Asia Pacific: +86 0 400 820 6015
UK: +44 800 267 666

For additional support numbers please visit www.te.com

AMPLIMITE Connectors vs. NASA Series 109 and 90 Cross Reference

NASA PART NUMBER FOR ORDERING	NASA PART NUMBER ON CONNECTOR	AMP PART NUMBER FOR ORDERING	AMP PART NUMBER ON CONNECTOR	REMARKS (All connectors provided with contacts unless otherwise specified)
311P407-1P-B-15	311P407-1P-B-15	206498-1	206498-1	LESS CONTACTS
311P407-1P-B-12	311P407-1P-B-12	206498-4	206498-4	LESS CONTACTS
311P407-2P-B-15	311P407-2P-B-15	206500-1	206500-1	LESS CONTACTS
311P407-2P-B-12	311P407-2P-B-12	206500-4	206500-4	LESS CONTACTS
311P407-3P-B-15	311P407-3P-B-15	206063-2	206063-2	LESS CONTACTS
311P407-3P-B-12	311P407-3P-B-12	206063-4	206063-4	LESS CONTACTS
311P407-4P-B-15	311P407-4P-B-15	206502-1	206502-1	LESS CONTACTS
311P407-4P-B-12	311P407-4P-B-12	206502-4	206502-4	LESS CONTACTS
311P407-5P-B-15	311P407-5P-B-15	206504-1	206504-1	LESS CONTACTS
311P407-5P-B-12	311P407-5P-B-12	206504-4	206504-4	LESS CONTACTS
311P407-6P-B-15	311P407-6P-B-15	206066-2	206066-2	LESS CONTACTS
311P407-6P-B-12	311P407-6P-B-12	206066-4	206066-4	LESS CONTACTS
311P407-1S-B-15	311P407-1S-B-15	206499-1	206499-1	LESS CONTACTS
311P407-1S-B-12	311P407-1S-B-12	206499-4	206499-4	LESS CONTACTS
311P407-2S-B-15	311P407-2S-B-15	206501-1	206501-1	LESS CONTACTS
311P407-2S-B-12	311P407-2S-B-12	206501-4	206501-4	LESS CONTACTS
311P407-3S-B-15	311P407-3S-B-15	206064-2	206064-2	LESS CONTACTS
311P407-3S-B-12	311P407-3S-B-12	206064-4	206064-4	LESS CONTACTS
311P407-4S-B-15	311P407-4S-B-15	206503-1	206503-1	LESS CONTACTS
311P407-4S-B-12	311P407-4S-B-12	206503-4	206503-4	LESS CONTACTS
311P407-5S-B-15	311P407-5S-B-15	206505-1	206505-1	LESS CONTACTS
311P407-5S-B-12	311P407-5S-B-12	206505-4	206505-4	LESS CONTACTS
311P407-6S-B-15	311P407-6S-B-15	206065-2	206065-2	LESS CONTACTS
311P407-6S-B-12	311P407-6S-B-12	206065-4	206065-4	LESS CONTACTS
311P409-1P-B-15	311P409-1P-B-15	207252-1	207252-1	LESS CONTACTS
311P409-1P-B-12	311P409-1P-B-12	207252-2	207252-2	LESS CONTACTS
311P409-2P-B-15	311P409-2P-B-15	206798-1	206798-1	LESS CONTACTS
311P409-2P-B-12	311P409-2P-B-12	206798-2	206798-2	LESS CONTACTS
311P409-3P-B-15	311P409-3P-B-15	206800-1	206800-1	LESS CONTACTS
311P409-3P-B-12	311P409-3P-B-12	206800-2	206800-2	LESS CONTACTS
311P409-4P-B-15	311P409-4P-B-15	206802-1	206802-1	LESS CONTACTS
311P409-4P-B-12	311P409-4P-B-12	206802-2	206802-2	LESS CONTACTS
311P409-5P-B-15	311P409-5P-B-15	206804-1	206804-1	LESS CONTACTS
311P409-5P-B-12	311P409-5P-B-12	206804-2	206804-2	LESS CONTACTS
311P409-1S-B-15	311P409-1S-B-15	207253-1	207253-1	LESS CONTACTS
311P409-1S-B-12	311P409-1S-B-12	207253-2	207253-2	LESS CONTACTS
311P409-2S-B-15	311P409-2S-B-15	206799-1	206799-1	LESS CONTACTS
311P409-2S-B-12	311P409-2S-B-12	206799-2	206799-2	LESS CONTACTS
311P409-3S-B-15	311P409-3S-B-15	206801-1	206801-1	LESS CONTACTS
311P409-3S-B-12	311P409-3S-B-12	206801-2	206801-2	LESS CONTACTS
311P409-4S-B-15	311P409-4S-B-15	206803-1	206803-1	LESS CONTACTS
311P409-4S-B-12	311P409-4S-B-12	206803-2	206803-2	LESS CONTACTS
311P409-5S-B-15	311P409-5S-B-15	206805-1	206805-1	LESS CONTACTS
311P409-5S-B-12	311P409-5S-B-12	206805-2	206805-2	LESS CONTACTS
G-08-P1		204370-8		SIZE 22 PIN
G-08-S1		206071-1		SIZE 22 SOCKET
G-10-P1		205089-4		SIZE 20 PIN
G-10-S1		206793-1		SIZE 20 SOCKET

Catalog 1308940
Revised 9-14

www.te.com

Dimensions are shown for reference purposes only. Specifications subject to change.

Dimensions are in millimeters unless otherwise specified.

USA: +1 800 522 6752
Asia Pacific: +86 0 400 820 6015
UK: +44 800 267 666

For additional support numbers please visit www.te.com

High Density Rectangular Connectors

Product Facts

- **Plug and receptacle connectors are molded plastic blocks categorized by the number of contact positions and type of material**
- **The pin body is fabricated from brass and conforms to MIL-C-50 or ASTM-B-36. The plating is gold per MIL-G-45204 over nickel per QQ-N-290. The retention spring sleeve is fabricated from stainless steel and conforms to QQ-S-766.**
- **The socket body is made of brass per MIL-C-50 or ASTM-B-36. Plating is gold per MIL-G-45204 over nickel per QQ-N-290. The stainless steel retention spring sleeve conforms to QQ-S-766**
- **Shields and cable clamps are molded polysulfone components conforming to MIL-P-46120**
- **Brass keying pins and sockets conform to QQ-B-626 or ASTM-B-16, with zinc plating per QQ-Z-325 or stainless steel per QQ-S-763**
- **Locking rings, washers, bushings, retaining rings, nuts and screws are stainless steel conforming to QQ-S-763 or QQ-S-766**
- **Recognized under the Component Program of Underwriters Laboratories Inc., File No. E28476**

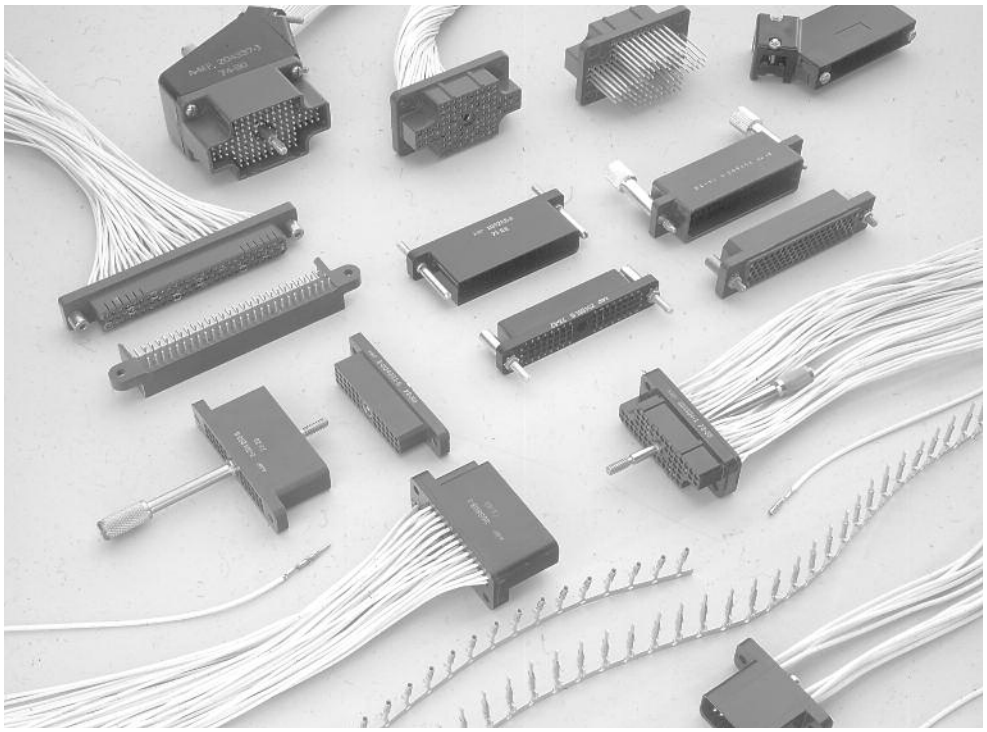

High Density Rectangular (HDR) connectors are designed in response to ever-increasing demands for miniaturization. The grid spacing of .100 x .100 [2.54 x 2.54] provides density for a connector accommodating a 20 thru 30 AWG [0.6 thru 0.05 mm^2] wire range.

A variety of contact configurations and platings permits great design flexibility. Machine terminated, crimp snap-in contacts are available for the entire wire range. Also available are .025 [0.64] square posts on pin and socket contacts suitable for wrap-type wiring.

This unique connector is available in 12, 24, 36, 48, 54 and 106 positions in a rectangular housing. A special 95-position connector rounds out this group of rack and panel configured connectors.

A two piece, 80-position connector has been developed for printed circuit boards.

Versatility is designed into this family of connectors. Housings are available with or without center fasteners. Housing material for most connectors is diallyl phthalate or phenolic. When mounting connectors with jackscrews, the receptacle half should be mounted to the chassis or panel. The turnable jackscrews should be positioned on the plug half containing the cable assembly.

Tooling for terminating leads is also available to meet production requirements. For limited production or prototype applications, the CERTI-CRIMP hand tool is ideal. Automatic machines are designed to fit various in-plant production needs.

Technical Features

Available Number of Positions — 12, 24, 36, 48, 54, 106

Center Spacing — .100 [2.54] x .100 [2.54]

Housing material — Diallyl Phthalate or Phenolic

Flammability Rating — UL 94V-0, UL File No. E28476

Contact Material — Brass

Contact Finish — .000030 [0.00076] Au

Contact Size — 20

Wire Size Range — 20–30 AWG

Termination Resistance —

AWG	Gold	Tin
20	8.0	16.5
24	14.5	27.0
26	22.0	—
30	48.0	—

Connector Mating Per Circuit — Gold 25 oz./Contact

Performance Characteristics

Dielectric Withstanding Voltage — 1000 VAC

Insulation Resistance — DAP 50,000 megohms min. (initial), Phenolic 5000 megohms min. (initial)

Voltage Rating — 440 VAC Sea Level @ 3 Amp max.

Connector Mating/Unmating — Gold 25 oz. max., Tin 50 oz. max.

Contact Retention Force — DAP – 5.0 lb., Phenolic – 7.5 lb.

Durability — 500 Matings per Cycle Gold, 250 Matings per Cycle Tin

Temperature Range — DAP –85°F to 257°F [–65°C to 125°C], Phenolic - 131°F to 302°F [55°C to 150°C]

Thermal Shock — DAP –85°F to 257°F [–65°C to 125°C], Phenolic - 131°F to 302°F [55°C to 125°C]

Maximum Current — 3 Amp max.

Wire Size —

AWG	Test Current
20	3.0
24	2.25
26	1.75
30	1.00

Technical Documents

Product Specifications — Connectors/PC Board Headers — 108-10015

Application Specification — 114-10002

Instruction Sheet — 408-7357, 408-7472, 408-7484

Catalog 1308940
Revised 9-14

www.te.com

Dimensions are shown for reference purposes only. Specifications subject to change.

Dimensions are in millimeters unless otherwise specified.

USA: +1 800 522 6752
Asia Pacific: +86 0 400 820 6015
UK: +44 800 267 666

For additional support numbers please visit www.te.com

High Density Rectangular Connectors (Continued)

Contacts

Type XI Crimp Snap-In Contacts

Contact Size — 20
Pin Diameter — .040 [1.02]

Plated as follows

A — .000030 [0.00076] gold over .000050 [0.00127] nickel

B — Gold flash over .000050 [0.00127] nickel on entire contact with additional .000030 [0.00076] gold in contact area

Contact Sleeve — Stainless Steel

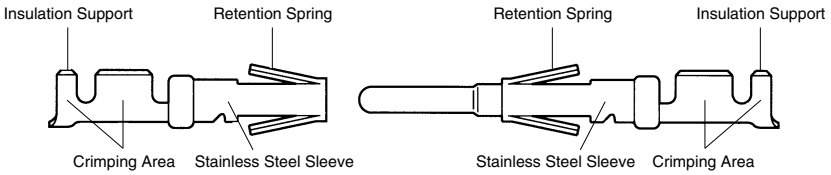

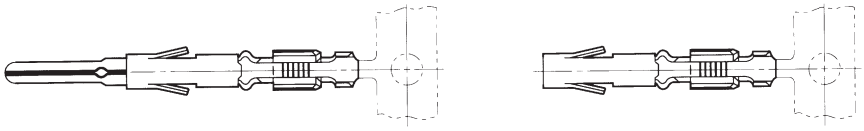

Pin

Socket

Insertion Tool

Part Number 91042-1

Wire Size Range AWG	Wire Size Range mm²	Ins. Dia. Max.	Contact Finish	Part Numbers: Strip Form Pin	Part Numbers: Strip Form Socket	Part Numbers: Loose Piece Pin	Part Numbers: Loose Piece Socket	CERTI-CRIMP Hand Tool No.	Quick-Change Applicator No.: AMP-O-LECTRIC Machine Model G	Quick-Change Applicator No.: AMP-O-MATIC Stripper/Crimper II Machine
20-24	0.6-0.2	**.062** 1.57	A	203816-1	203802-1	203816-3	203802-3	91544-1	—	466904-1
			B	203816-2	203802-2	203816-4	203802-4			
26-30	0.15-0.05	**.048** 1.22	A	203874-1	203875-1	203874-3	203875-3	90223-5	—	—
			B	203874-2	203875-2	203874-4	203875-4			

Wrap-Type Contacts with .025 x .025 [0.64 x 0.64] Posts

Contact Size — 20
Pin Diameter — .040 [1.02]

Plated as follows

A — .000030 [0.00076] gold over .000050 [.00127] nickel

B — Gold flash over .000050 [.00127] nickel on entire contact with additional .000030 [.00076] gold in contact area

Contact Sleeve — Stainless Steel

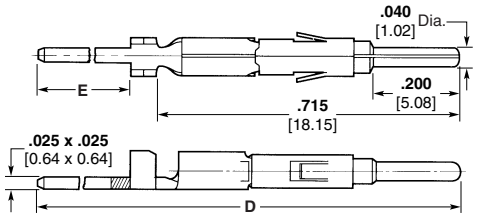

Pin

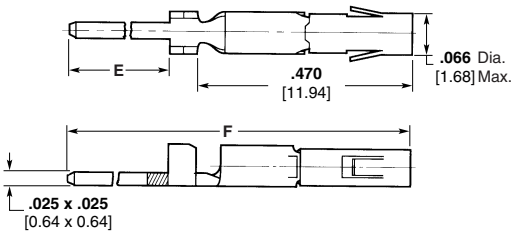

Socket

Extraction Tool

Part Number 91038-3

Max. Terminations Per Post	Dimensions D	Dimensions E	Dimensions F	Contact Finish	Contact Part Numbers* Pin	Contact Part Numbers* Socket
1	**1.022** 25.96	**.257** 6.53	**.767** 19.48	A	1-205171-0	1-205172-0
				B	205171-7	205172-7
2	**1.236** 31.39	**.471** 11.96	**.981** 24.92	A	1-205171-1	1-205172-1
				B	205171-8	205172-8
3	**1.450** 36.83	**.685** 17.40	**1.195** 30.35	A	1-205171-2	1-205172-2
				B	205171-9	205172-9

*Loose piece contacts for maintenance and repair only. Packaged 100 pieces per bag.

Dimensions are shown for reference purposes only. Specifications subject to change.

Dimensions are in millimeters unless otherwise specified.

USA: +1 800 522 6752
Asia Pacific: +86 0 400 820 6015
UK: +44 800 267 666

For additional support numbers please visit www.te.com

High Density Rectangular Connectors (Continued)

Housings

12, 24, 36, & 48 Positions

Material — See chart on page 8-109

Related Product Data

Contacts — page 8-107

Accessories — pages 8-115 and 8-116

Technical Documents — page 8-106

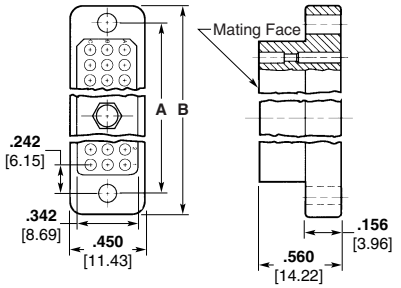

Plug

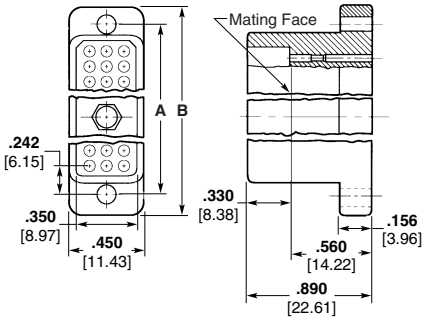

Receptacle

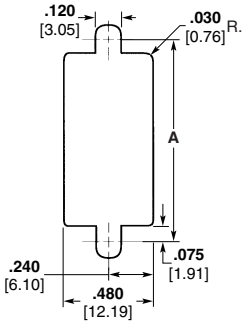

Recommended Panel Cutout

54 Position

Material — See chart on page 8-109

Related Product Data

Contacts — page 8-107

Accessories — pages 8-115 and 8-116

Technical Documents — page 8-106

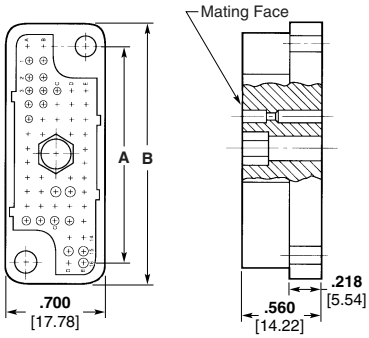

Plug

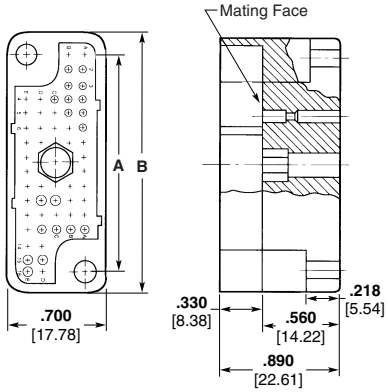

Receptacle

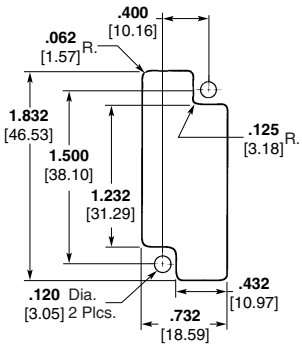

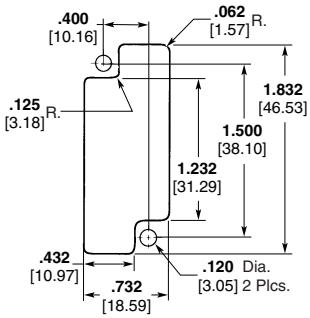

Recommended Panel Cutout

Catalog 1308940
Revised 9-14

www.te.com

Dimensions are shown for reference purposes only. Specifications subject to change.

Dimensions are in millimeters unless otherwise specified.

USA: +1 800 522 6752
Asia Pacific: +86 0 400 820 6015
UK: +44 800 267 666

For additional support numbers please visit www.te.com

High Density Rectangular Connectors (Continued)

Housings (Continued)

106 Position

Material — see chart below

Related Product Data

Contacts — page 8-107

Accessories — pages 8-115 and 8-116

Technical Documents — page 8-106

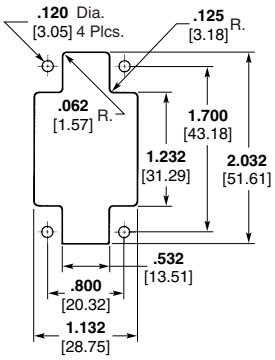

Recommended Panel Cutout

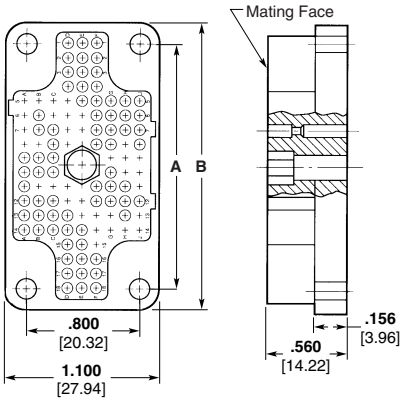

Plug

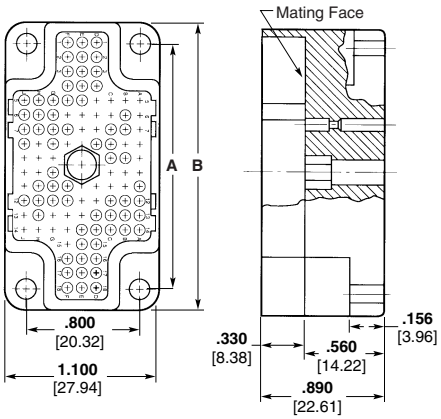

Receptacle

Center Fastener	No. of Positions	Dimensions A	Dimensions B	Center Fastener Type	Part Numbers: Plug Half Phenolic	Part Numbers: Plug Half Diallyl Phthalate	Part Numbers: Receptacle Half Phenolic	Part Numbers: Receptacle Half Diallyl Phthalate
With Center Fastener	12	**1.084** 24.43	**1.334** 33.88	Fixed Female	204727-1	204727-2	—	204728-2
				Long Male Turnable	—	—	204740-1	204740-2
	24	**1.484** 37.69	**1.734** 44.04	Fixed Female	204729-1	204729-2	—	—
				Long Male Turnable	—	204741-2	204742-1	204742-2
				Short Male Turnable	—	—	—	204742-4
	36	**1.884** 47.85	**2.134** 54.20	Fixed Female	204731-1	204731-2	—	204732-2
				Long Male Turnable	204743-1	204743-2	204744-1	204744-2
				Short Male Turnable	204743-3	—	—	—
	48	**2.284** 58.01	**2.534** 64.36	Fixed Female	204733-1	—	204734-1	204734-2
				Long Male Turnable	—	204745-2	204746-1	204746-2
				Short Male Turnable	—	204745-4	—	—
	54	**1.500** 38.10	**1.800** 45.72	Fixed Female	204735-1	—	204736-1	—
				Long Male Turnable	204747-1	204747-2	204748-1	204748-2
				Short Male Turnable	—	—	—	204748-4
	106	**1.700** 43.18	**2.000** 50.80	Fixed Female	204737-1	204737-2	204738-1	204738-2
				Long Male Turnable	204749-1	204749-2	204750-1	204750-2
				Short Male Turnable	—	204749-4	—	204750-4
Without Center Fastener	12	**1.084** 24.43	**1.334** 33.88	—*	204281-2	2-204281-2	204282-2	—
	24	**1.484** 37.69	**1.734** 44.04	—*	—	2-204281-4	204282-4	2-204282-4
	36	**1.884** 47.85	**2.134** 54.20	—*	204281-6	2-204281-6	204282-6	2-204282-6
	48	**2.284** 58.01	**2.534** 64.36	—*	204281-8	2-204281-8	204282-8	—
	54	**1.500** 38.10	**1.800** 45.72	—*	203804-1	203804-2	203803-1	203803-2
	106	**1.700** 43.18	**2.000** 50.80	—*	204260-1	204260-2	204259-1	204259-2

*See page 8-115 for jackscrews.

Dimensions are shown for reference purposes only. Specifications subject to change.

Dimensions are in millimeters unless otherwise specified.

USA: +1 800 522 6752
Asia Pacific: +86 0 400 820 6015
UK: +44 800 267 666

For additional support numbers please visit www.te.com

High Density Rectangular Connectors (Continued)

Housings (Continued)

95 Position Connector with Jackscrews

Material

Housing — Diallyl Phthalate
Jackscrews — Stainless Steel

Related Product Data

Contacts — page 8-107
Technical Documents — page 8-106

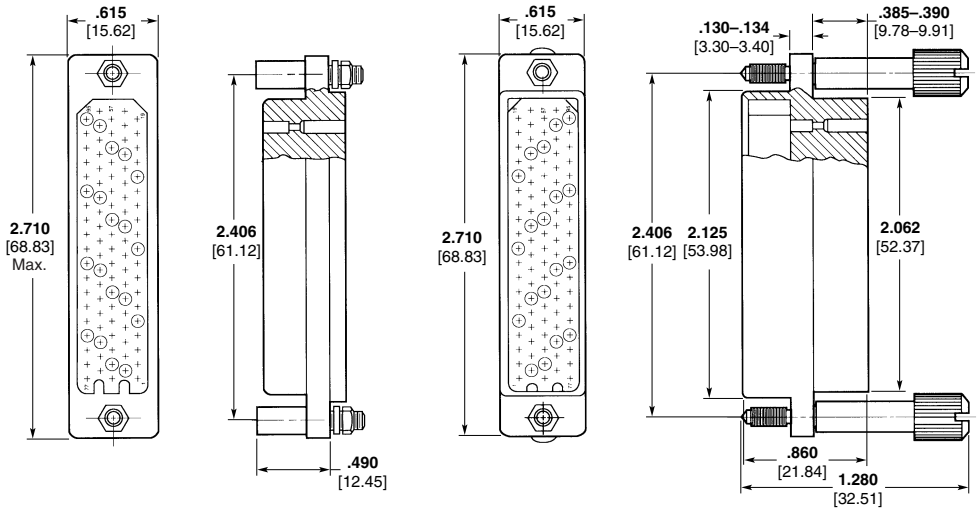

Plug
Part Number 204694-1

Receptacle
Part Number 204693-2

95 Position Connector with Floating Bushings

Material

Housing — Diallyl Phthalate
Floating Bushings — Stainless Steel

Related Product Data

Contacts — page 8-107
Technical Documents — page 8-106

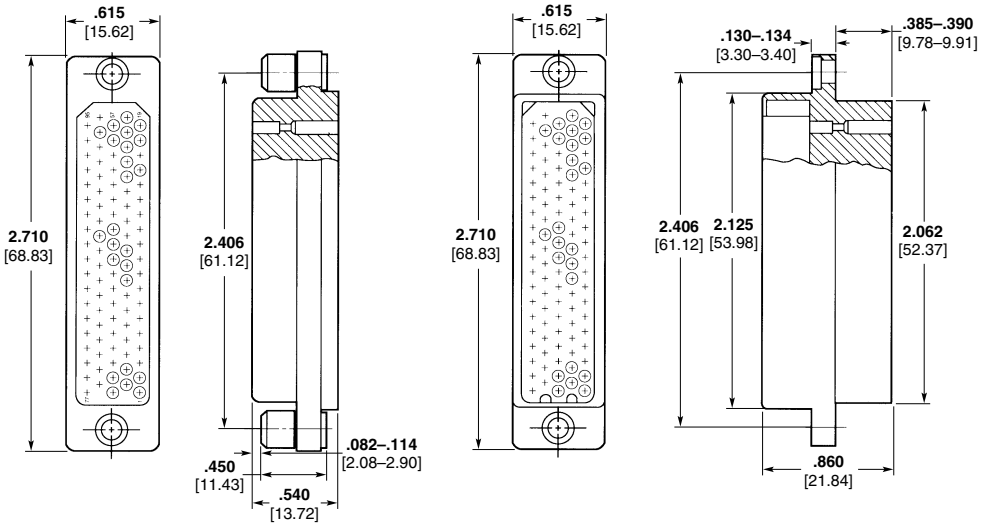

Plug
Part Number 204030-1

Receptacle
Part Number 204027-2

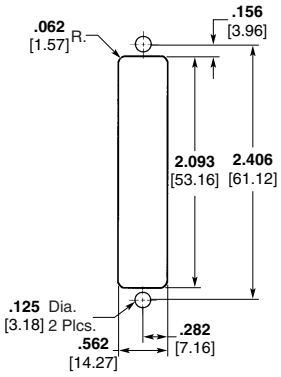

Recommended Panel Cutout

Note: Marking on receptacles are on wiring side only.

High Density Rectangular Connectors (Continued)

Printed Circuit Board Connector

80 Position Pin Header

Material and Finish

Housing — Diallyl Phthalate

Contacts — Brass Plated .000030 [0.00076] Gold over .000030 [0.00076] Nickel

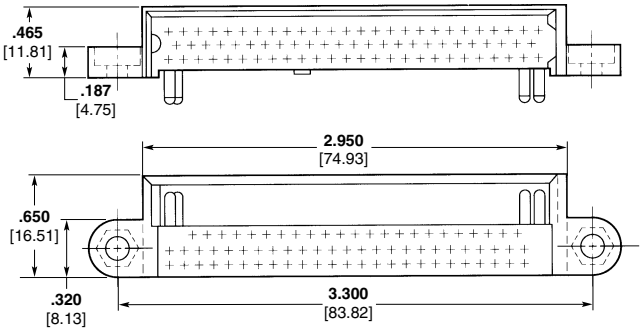

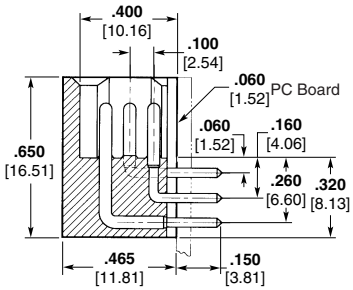

Part Number 204818-4

80 Position Plug with Floating Bushings

Material and Finish

Housing — Diallyl Phthalate

Floating Bushings — Stainless Steel

Related Product Data

Contacts — page 8-107

Technical Documents — page 8-106

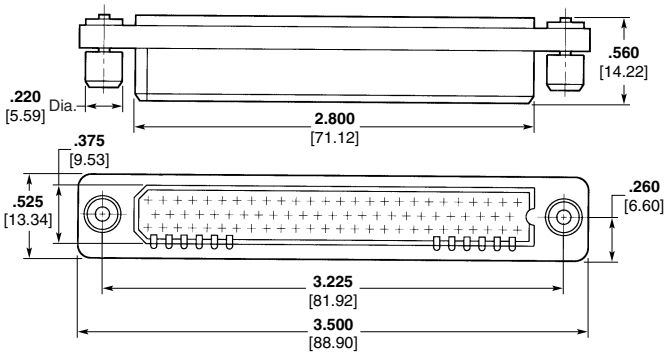

Part Number 204819-1

Catalog 1308940
Revised 9-14

www.te.com

Dimensions are shown for reference purposes only. Specifications subject to change.

Dimensions are in millimeters unless otherwise specified.

USA: +1 800 522 6752
Asia Pacific: +86 0 400 820 6015
UK: +44 800 267 666

For additional support numbers please visit www.te.com

High Density Rectangular Connectors (Continued)

Preloaded Housings, .025 x .025 [0.64 x 0.64] Posted Contacts for Automatic Wiring

12, 24, 36, & 48 Position

Material and Finish

Housing — See Chart

Contact Body — Brass Plated as follows

A — .000030 [0.00076] Gold over .000050 [0.00127] Nickel

B — Gold Flash over .000050 [0.00127] Nickel on entire contact, with additional .000030 [0.00076] Gold in contact area

Contact Sleeve — Stainless Steel

Related Product Data

Contact Size — 20

Pin Diameter — .040 [1.02]

Current Rating — 3.0 Amperes (20 AWG [0.5–0.6 mm2] wire)

Replacement Contacts — page 8-107

Mateable Connectors — pages 5-226 and 5-227

Technical Documents — page 8-106

Plug Assembly

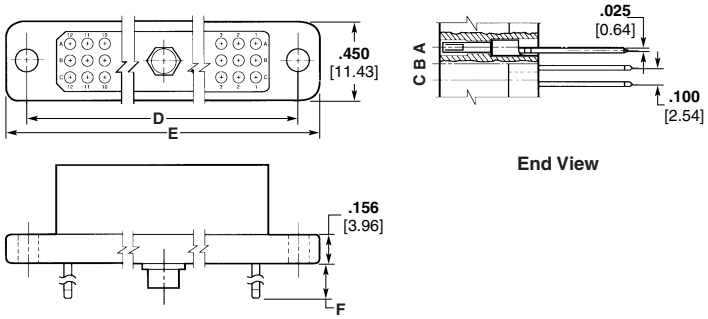

Receptacle Assembly

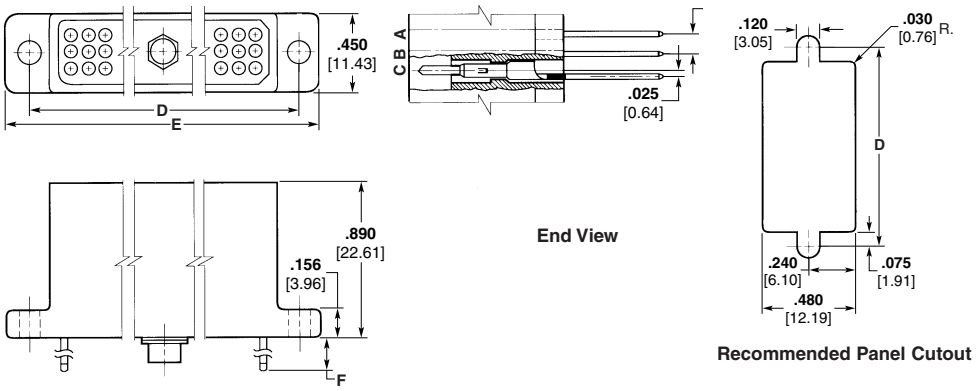

No. of Positions	Dimensions D	Dimensions E	Contact Finish	Max. Termination Per Post	Dim. F	Part Numbers: Plug Assembly Socket Contacts, Phenolic	Part Numbers: Plug Assembly Socket Contacts, Diallyl Phthalate	Part Numbers: Receptacle Assembly Pin Contacts, Phenolic	Part Numbers: Receptacle Assembly Pin Contacts, Diallyl Phthalate
12	**1.084** 27.43	**1.334** 33.88	A	1	**.242** 6.15	—	—	—	2-204682-8
				3	**.670** 17.02	—	—	—	3-204682-0
24	**1.484** 37.69	**1.734** 44.04	A	1	**.242** 6.15	—	6-204683-4	1-204684-9	—
				3	**.670** 17.02	—	6-204683-6	2-204684-1	3-204684-0
			B	1	**.242** 6.15	6-204683-1	7-204683-0	—	—
				3	**.670** 17.02	6-204683-3	—	2-204684-7	—
36	**1.884** 48.85	**2.134** 54.20	A	1	**.242** 6.15	—	—	1-204686-9	2-204686-8
				3	**.670** 17.02	5-204685-7	6-204685-6	—	3-204686-0
			B	1	**.242** 6.15	—	—	—	3-204686-4
				3	**.670** 17.02	6-204685-3	7-204685-2	—	3-204686-6
48	**2.284** 58.01	**2.534** 64.36	A	1	**.242** 6.15	5-204687-5	—	—	2-204688-8
				3	**.670** 17.02	5-204687-7	6-204687-6	—	3-204688-0
			B	1	**.242** 6.15	—	7-204687-0	—	—
				3	**.670** 17.02	6-204687-3	7-204687-2	—	—

Notes: 1. Markings on receptacle assembly are on wiring side only.
2. In addition to combinations listed, all sizes are available with or without female jackscrews. Plugs are available with pins, and receptacles are available with sockets. Consult TE Connectivity for details.
3. Fixed female jackscrews are included with these assemblies.

Catalog 1308940
Revised 9-14
www.te.com

Dimensions are shown for reference purposes only. Specifications subject to change.

Dimensions are in millimeters unless otherwise specified.

USA: +1 800 522 6752
Asia Pacific: +86 0 400 820 6015
UK: +44 800 267 666

For additional support numbers please visit www.te.com

High Density Rectangular Connectors (Continued)

Preloaded Housings, .025 x .025 [0.64 x 0.64] Posted Contacts for Automatic Wiring (Continued)

54 Position

Material and Finish

Housing — See Chart

Contact Body —
Brass Plated as follows
A — .000030 [0.00076] Gold over .000050 [0.00127] Nickel
B — Gold Flash over .000050 [0.00127] Nickel on entire contact, with additional .000030 [0.00076] Gold in contact area

Contact Sleeve — Stainless Steel

Related Product Data

Contact Size — 20

Pin Diameter — .040 [1.02]

Current Rating — 3.0 Amperes (20 AWG [0.5–0.6 mm2] wire)

Replacement Contacts — page 8-107

Mateable Connectors — pages 5-226 and 5-227

Technical Documents — page 8-106

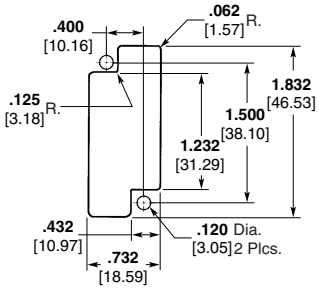

Recommended Panel Cutout for Receptacle

Plug Assembly

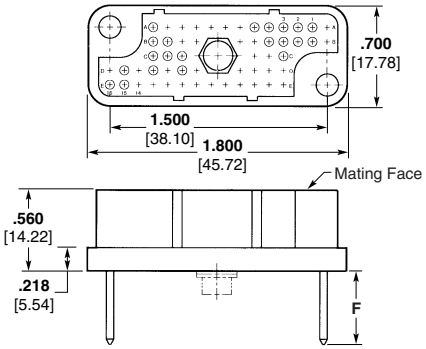

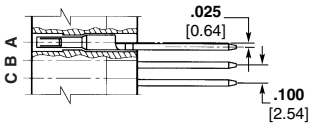

End View

Receptacle Assembly

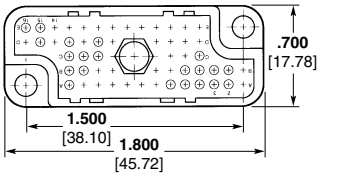

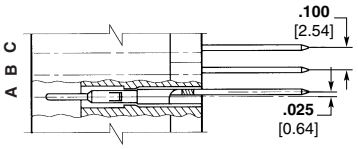

End View

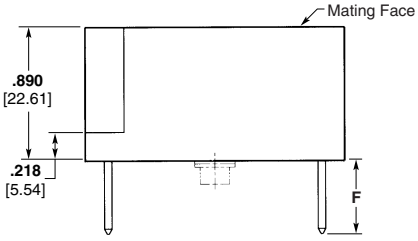

Contact Finish	Max. Termination Per Post	Dim. F	Part Numbers: Plug Assembly Socket Contacts — Phenolic	Plug Assembly Socket Contacts — Diallyl Phthalate	Receptacle Assembly Pin Contacts — Phenolic	Receptacle Assembly Pin Contacts — Diallyl Phthalate
A	1	.242 6.15	5-204689-5	6-204689-4	1-204690-9	—
	2	.456 11.58	5-204689-6	6-204689-5	—	—
	3	.670 17.02	5-204689-7	6-204689-6	2-204690-1	3-204690-0
B	1	.242 6.15	6-204689-1	—	—	—
	3	.670 17.02	—	7-204689-2	2-204690-7	—

Notes: 1. Markings on receptacle assembly are on wiring side only.
2. In addition to combinations listed, all sizes are available with or without female jackscrews. Plugs are available with pins, and receptacles are available with sockets. Consult TE Connectivity for details.
3. Fixed female jackscrews are included with these assemblies.

Dimensions are shown for reference purposes only. Specifications subject to change.
Dimensions are in millimeters unless otherwise specified.
USA: +1 800 522 6752
Asia Pacific: +86 0 400 820 6015
UK: +44 800 267 666
For additional support numbers please visit www.te.com

High Density Rectangular Connectors (Continued)

Preloaded Housings, .025 x .025 [0.64 x 0.64] Posted Contacts for Automatic Wiring (Continued)

106 Position

Material and Finish

Housing — See Chart

Contact Body — Brass Plated as follows

A — .000030 [0.00076] Gold over .000050 [0.00127] Nickel

B — Gold Flash over .000050 [0.00127] Nickel on entire contact, with additional .000030 [0.00076] Gold in contact area

Contact Sleeve — Stainless Steel

Related Product Data

Contact Size — 20

Pin Diameter — .040 [1.02]

Current Rating — 3.0 Amperes (20 AWG [0.5–0.6 mm2] wire)

Replacement Contacts — page 8-107

Mateable Connectors — pages 5-226 and 5-227

Technical Documents — page 8-106

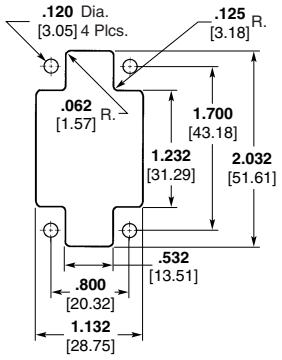

Recommended Panel Cutout

Plug Assembly

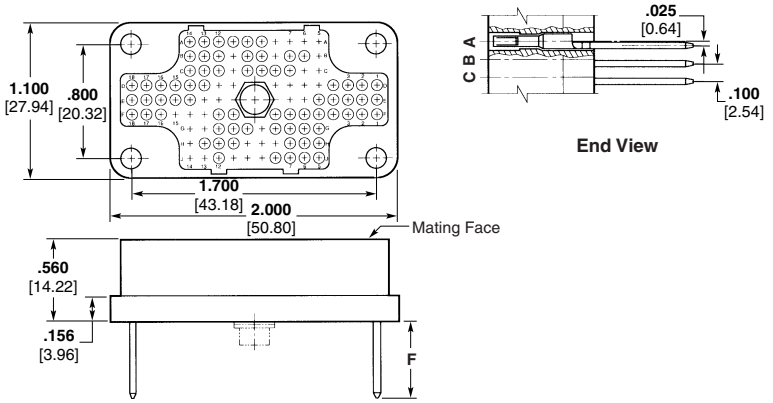

Receptacle Assembly

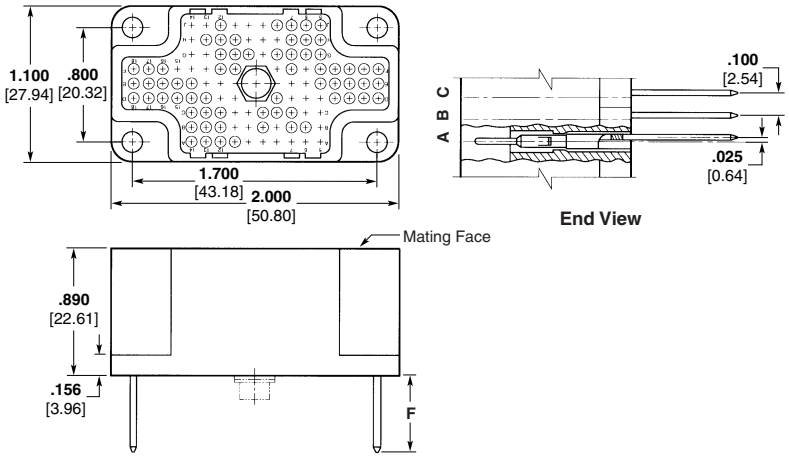

Contact Finish	Max. Termination Per Post	Dim. F	Part Numbers: Plug Assembly Socket Contacts — Phenolic	Plug Assembly Socket Contacts — Diallyl Phthalate	Receptacle Assembly Pin Contacts — Phenolic	Receptacle Assembly Pin Contacts — Diallyl Phthalate
A	1	**.242** 6.15	5-204691-5	—	—	2-204692-8
	3	**.670** 17.02	5-204691-7	6-204691-6	2-204692-1	3-204692-0
B	1	**.242** 6.15	6-204691-1	7-204691-0	—	3-204692-4
	3	**.670** 17.02	6-204691-3	7-204691-2	2-204692-7	3-204692-6

Notes: 1. Markings on receptacle assembly are on wiring side only.
2. In addition to combinations listed, all sizes are available with or without female jackscrews. Plugs are available with pins, and receptacles are available with sockets. Consult TE Connectivity for details.
3. Fixed female jackscrews are included with these assemblies.

High Density Rectangular Connectors (Continued)

Accessories

Center Fasteners

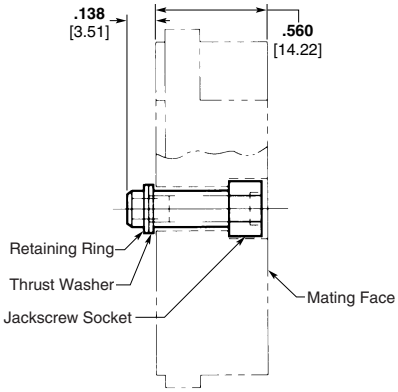

Fixed Female Jackscrew

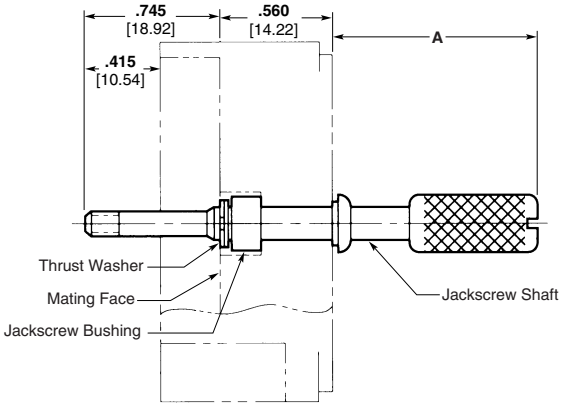

Male Turnable Jackscrew

No. of Positions	Type	A	Part No.
12, 24 36, 48	Fixed Female	—	204299-1
	Short Male Turnable	**1.01** 25.65	204298-1
	Long Male Turnable	**1.76** 44.70	204298-2
54, 106	Fixed Female	—	203879-1
	Short Male Turnable	**1.01** 25.65	203880-1
	Long Male Turnable	**1.76** 44.70	203880-2

Note: Short male jackscrews cannot be used with shield and cable clamp assemblies.

Keying

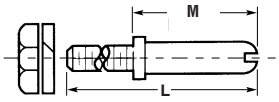

Guide Pin

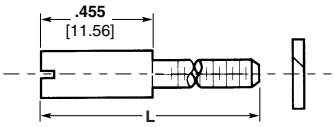

Guide Socket

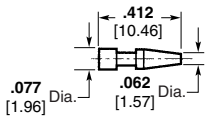

Keying Plug
Part Number 205120-1

Material	Pin			Socket	
	Dim. L	Dim. M	Part No.	Dim. L	Part No.
Zinc Plated Brass	**1.100** 27.94	**.515** 13.08	203881-1	**1.045** 26.54	203882-1
Stainless Steel	**1.100** 27.94	**.515** 13.08	203881-2	**1.045** 26.54	203882-2
Zinc Plated Brass	**1.300** 33.02	**.725** 18.42	205694-1	—	—

Catalog 1308940
Revised 9-14

www.te.com

Dimensions are shown for reference purposes only. Specifications subject to change.

Dimensions are in millimeters unless otherwise specified.

USA: +1 800 522 6752
Asia Pacific: +86 0 400 820 6015
UK: +44 800 267 666

For additional support numbers please visit www.te.com

High Density Rectangular Connectors (Continued)

Accessories (Continued)

45° Shield and Cable Clamps

Material — Black Polysulfone

12, 24, 36 & 48 Position

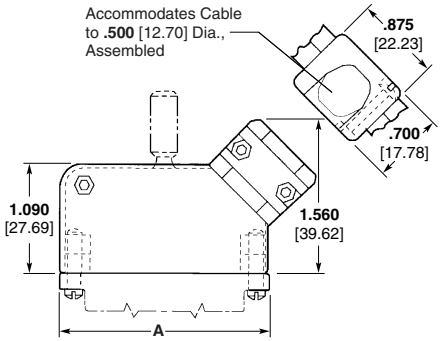

No. of Positions	Dim. A	Part No.
12	**1.334** 33.88	205083-1
24	**1.734** 44.04	205083-2
36	**2.134** 54.20	205083-3
48	**2.534** 64.36	205083-4

54 Position

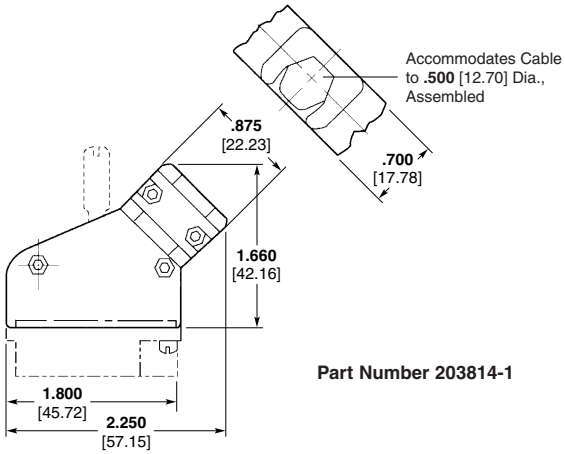

Part Number 203814-1

106 Position

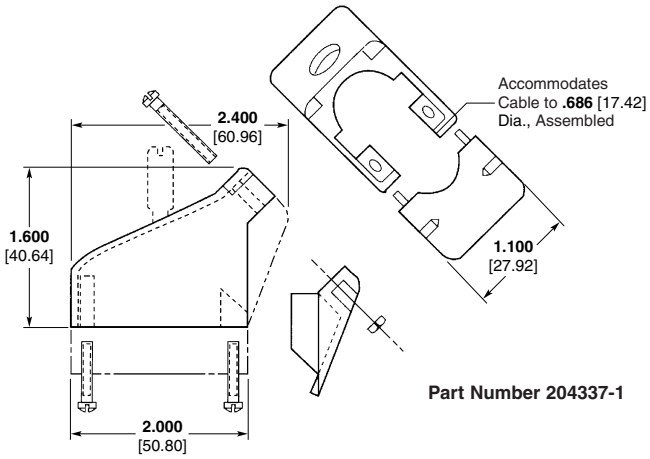

Part Number 204337-1

Dimensions are shown for reference purposes only. Specifications subject to change.

Dimensions are in millimeters unless otherwise specified.

USA: +1 800 522 6752
Asia Pacific: +86 0 400 820 6015
UK: +44 800 267 666

For additional support numbers please visit www.te.com

High Density Rectangular Connectors (Continued)

Application Tooling

Type XI crimp/snap-in contacts may be applied with hand tools, semi-automatic bench equipment or fully-automatic lead-making machines.

CERTI-CRIMP II Straight Action Hand Tools (SAHT)

Premium grade hand tools. Feature ratchet control to provide complete crimp cycle. Die sets close in a straight line. Include a contact locator and wire stop, plus an insulation crimp adjustment lever, when applicable. Approximate weight 1.3 lb [0.59 kg].

AMP-O-LECTRIC Model "K" Terminating Machine, 1-471273-3

Semiautomatic bench machine for use with standard-style applicators. It is an electrically-powered, clutched, flywheel-energy-style machine, equipped with a mechanical strip feed mechanism. Products commonly applied with this machine include AMP splices, AMPLIVAR splices, and FASTON flag receptacles.

Specifications

Width — 21 [533]

Depth — 20 [508]

Height — 24 [610] without reel

Weight — 230 lb [104 kg]

Electrical — 120 VAC, 60 Hz, 6 A

Air — 90-110 psi [6.21-7.59 bar], 6 scfm [0.00282 m^3/s] when required with air-feed applicators

Wire Range — 26-10 AWG [0.12-6 mm^2] solid or stranded, depending on product applied

For more information, contact TE Connectivity.

AMPOMATOR CLS IV+ Lead-Making Machines, 356500-1, -2

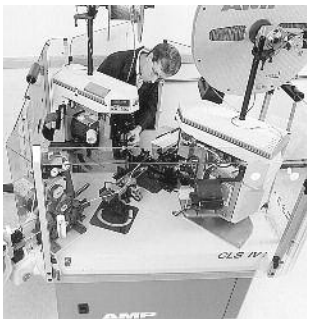

Fully-automatic machines that measure, cut, strip and terminate single leads. Microprocessor-controlled, and programmed and operated using an easy-to-follow, menu-driven touch-screen. Features include direct-drive terminating units with precision crimp height adjustment, fully programmable setups, wire runout and splice detection, and motorized pre-feed with wire straightener. Crimp quality monitoring is also available.

Specifications

Width — 159 [4 040]

Depth — 68 [1 730]

Height — 86 [2 185] with 24 [610] dia. reel

Weight — 2 000 lb [907 kg]

Electrical — 220 VAC, 50 or 60 Hz, single phase, 25 A, with neutral and ground

Air — 90 psi [6.21 bar], 15 scfm [0.0071 m^3/s] sustained

Wire Range — 26-10 AWG [0.12-6 mm^2] stranded, 26-16 AWG [0.12-1.4 mm^2] solid

Lead Lengths — 3-90 [76.2-2 285], 90-1 000 [2 285-25 400] with long lead conveyors

For more information, request Catalog 124324.

Crimp Quality Monitor (CQM), 1320420-1, -2

This unique system provides 100% on-the-fly crimp inspection. It measures the crimp height of each termination, and evaluates the quality of each crimp. If a crimp is questionable, the monitor alerts the operator with both visual and audible alarms. It also provides ports for printing and networking. When used with AMP-O-LECTRIC Model "G" Termination Machines, the monitor is mounted to the machine. When used with AMPOMATOR CLS IV+ Lead-Making Machines, it is integrated into the machine's operating system.

Specifications

Width — 8.8 [220]

Depth — 8.1 [205]

Height — 4.6 [115]

Weight — 5 lb [2.3 kg]

Electrical — 100-240 VAC, 50/60 Hz, 3.2 A

For more information, request Catalog 82275.

Catalog 1308940
Revised 9-14

www.te.com

Dimensions are shown for reference purposes only. Specifications subject to change.

Dimensions are in millimeters unless otherwise specified.

USA: +1 800 522 6752
Asia Pacific: +86 0 400 820 6015
UK: +44 800 267 666

For additional support numbers please visit www.te.com

High Density Rectangular Connectors (Continued)

Application Tooling
(Continued)

AMP-O-LECTRIC Model "G" Terminating Machines, 354500-1, -9, -11

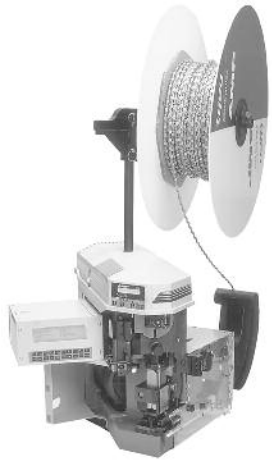

Semiautomatic bench machines for crimping reeled terminals and contacts, featuring a quiet and reliable direct motor drive, microprocessor controls for ease of setup and operation, and guarding and lighting designed for operator convenience. All models are equipped with either manual or automatic precision adjustment of crimp height. Machine-mounted sensors are available for crimp quality monitoring using conventional miniature-style applicators.

Specifications

Width — 18.7-25.3 [475-643] depending on applicator type

Depth — 21.5-28.1 [546-713] depending on applicator type

Height — 20 [508]

Weight — 240 lb [110 kg]

Electrical — 120 or 220 VAC, 50 or 60 Hz; 310 VA

Air — 90-110 psi [6.21-7.59 bar], 6 scfm [0.00282 m^3/s] when required with air-feed applicators

Wire Range — 26-10 AWG [0.12-6 mm^2] solid or stranded, depending on product applied

For more information, request Catalog 65828.

Entry Level Terminator (ELT), 1338600-1, -2, -3, -4 ,-5, -6

Semiautomatic Bench Terminator for side- and end-feed reeled terminals and contacts. The ELT uses a DC motor with gear box drive. The result is a small-footprint design that is fast and quiet. Cycle time is less than 0.400 seconds with an operation sound level of 76dBa. With a crimp force capacity of 3,000 pounds, the ELT is available for all but the highest crimp force applications. A wide range of optional equipment is also available to meet your specific application requirements.

Specifications

Width — 16.8 [427]

Depth — 20.6 [523]

Height — 20 [510] without reel support

Weight — approx. 150 lb [68 kg]

Electrical — 100-240 VAC, 50/60 Hz, 6A *(Note: Avg <1 A at 120 VAC when used as a bench-top unit at 2,000 cycles per hour operating rate)*

Air — 90-100 psi [6.21-6.90 bar], 6 scfm [0.00282 m^3/s] when required for use with air-feed applicators *(Note: Optional Air Feed Valve Assembly Required)*

Wire Range — Up to 14 AWG [2.5 mm^2]

For more information, request catalog 1308382.

AMP-O-MATIC Stripper/Crimper Machine, 1320895-1

Semiautomatic bench crimping machines that also strip the wire, and are therefore used for terminating jacketed cable. Feature manual precision adjustment of crimp height, keyed strip blades for faster, more accurate setups, and an efficient scrap removal system. All adjustments can be made from the front of the machines without special tools. Available with crimp quality monitoring.

Specifications

Width — 14 [355]

Depth — 18 [457]

Height — 33 [838] without reel

Weight — 150 lb [68 kg]

Electrical — 120 VAC, 50 or 60 Hz, .5 A

Air — 80-100 psi [5.52-6.90 bar], 3.5 scfm [0.00165 m^3/s]

Wire Range — 32-14 AWG [0.03-2 mm^2]

For more information, request Catalog 65004.

Stripping Module

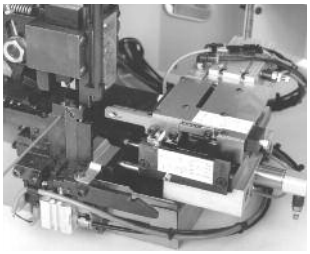

The combination of the Stripping Module with the Entry Level Terminator (ELT) or the AMP-O-LECTRIC Model G Terminator provides an economical and proficient method of stripping wire and crimping terminals on the same machine. Wires are stripped moments before crimping, meaning there is virtually no chance of damaging wire conductors during handling or storage. Once the wire is fed into the start sensor the Stripping Module does the rest, improving placement accuracy.

Specifications

Wire Range Base Module — 0.03 mm^2 - 2.0 mm^2 (32-14 AWG) (30-32 AWG may require special kit.)

Max. Insulation — .200 [5.08]

Cable Breakout — > 1.100 [29.00]

Strip Length — .100 - .400 [2.50 - 10.16]

Noise — Less than 82 dBA (Typical at operator position with standard mechanical feed applicator)

Weight — 4.53 Kilograms (10 lb)

Height — 5.000 [127.00]

Electrical — 100-240 VAC, 50/60 Hz, single phase current, obtains power from the terminator

Air — 620-760 kPa (90-100 psi), 2.83 liters/sec (6 scfm)

Wire Sensor — Gold plated contacts with laser etched target

For more information, request Catalog 1309085.

Dimensions are shown for reference purposes only. Specifications subject to change.

Dimensions are in millimeters unless otherwise specified.

USA: +1 800 522 6752
Asia Pacific: +86 0 400 820 6015
UK: +44 800 267 666

For additional support numbers please visit www.te.com

Introduction

Product Facts

- **Low-profile rectangular design for high packaging density**
- **Environmental sealing for aerospace applications**
- **Modular components for design versatility and logistics savings**
- **Lightweight materials for weight savings**
- **Quick-disconnect or jackscrew mating hardware**

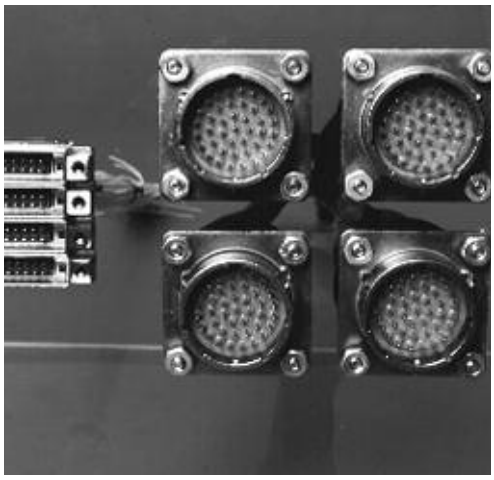

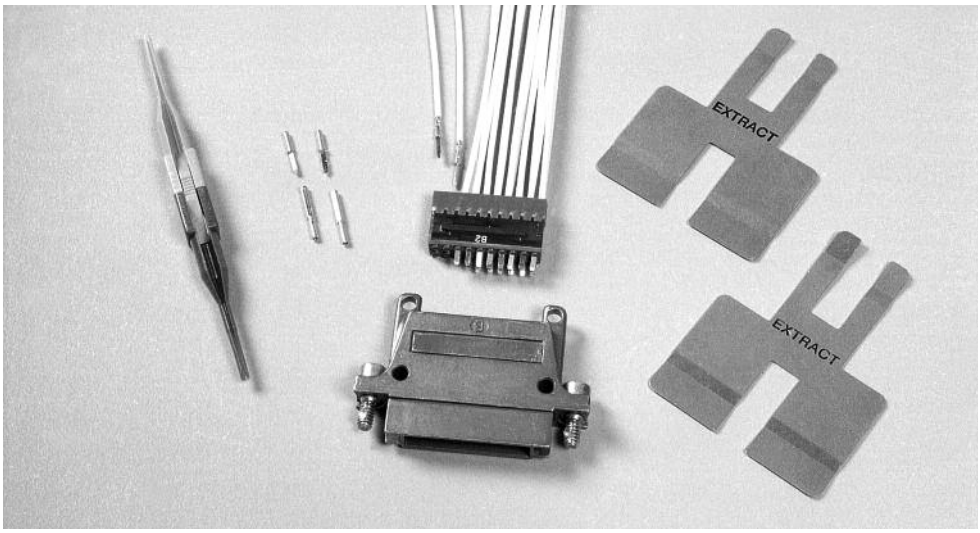

System

TE Connectivity MTC product line is a complete modular connector system consisting of lightweight, environmentally sealed miniature rectangular connectors (shell housings with removable inserts) and individually removable rear-release contacts.

Components

MTC connectors are now available with quick-disconnect mating hardware, EME shielding accessories, and modular inserts that can accommodate a mix of signal and power crimp contacts and coaxial contacts. The need for special termination tooling has been minimized, while the ease of manufacturing and maintenance has been improved.

Configurations

MTC rectangular connectors using jack screws or quick-disconnect hardware can be stacked or panel-mounted next to each other without any provision for grip space, a feature that can save significant panel area.

MTC connectors are available in 1-inch and 2-inch configurations. Modular removable inserts with size 22 and/or size 16 contact cavities can be combined into the 1-inch and 2-inch MTC housings.

Inserts

MTC inserts are available in 20-cavity and 5-cavity versions. The 20-cavity insert accepts size 20-22 (24 AWG to 20 AWG wire) crimp contacts. The 5-cavity insert accepts size 16–14 crimp contacts. Insertion/extraction of the contacts is rear release.

Note:
Other configurations are available in the MTC family (size 12 contacts; 50 mil spacing for double density; accessories). Please contact TE.

Catalog 1308940
Revised 9-14

www.te.com

Dimensions are shown for reference purposes only. Specifications subject to change.

Dimensions are in millimeters unless otherwise specified.

USA: +1 800 522 6752
Asia Pacific: +86 0 400 820 6015
UK: +44 800 267 666

For additional support numbers please visit www.te.com

20-Cavity Inserts

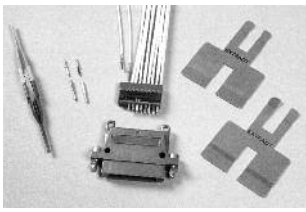

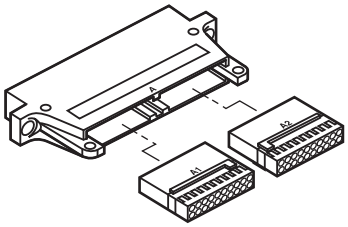

2-inch shell with inserts

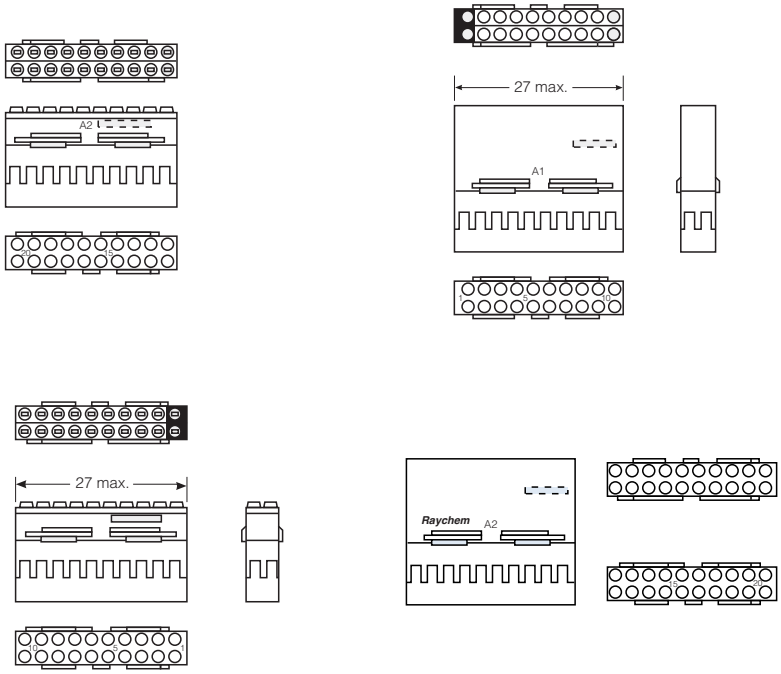

MTCP-122-20 inserts are used with MTC100 1-inch and 2-inch shells.
The 1-inch shell takes:

- One MTCP-122-20P (pin contact) **or**
- One MTCP-122-20S (socket contact)

The 2-inch shell takes:

- One MTCP-122-20P1 and one MTCP-122-20P2 (pin contact) **or**
- One MTCP-122-20S1 and one MTCP-122-20S2 (socket contact)

2 x 20 Cavity Inserts (Size 20–22)—2-Inch Shell

Pin Insert	Socket Insert
MTCP-122-20P1	MTCP-122-20S1
MTCP-122-20P2	MTCP-122-20S2

Catalog 1308940
Revised 9-14

www.te.com

Dimensions are shown for reference purposes only. Specifications subject to change.

Dimensions are in millimeters unless otherwise specified.

USA: +1 800 522 6752
Asia Pacific: +86 0 400 820 6015
UK: +44 800 267 666

For additional support numbers please visit www.te.com

20-Cavity Inserts (Continued)

1 x 20 Cavity Inserts (Size 20–22)—1-Inch Shell

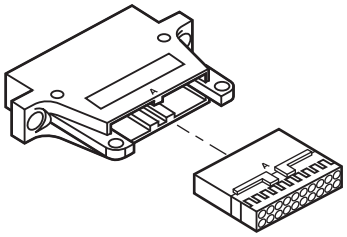

1-inch shell with insert

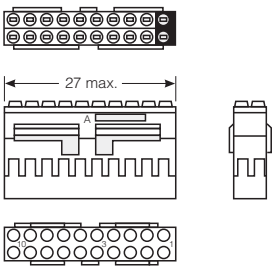

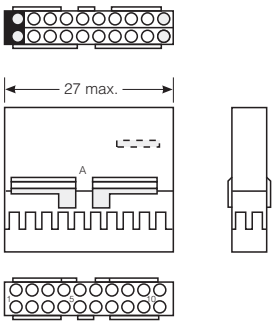

Pin Insert	Socket Insert
MTCP-122-20P	MTCP-122-20S

Contacts for 20-Cavity Inserts
The contacts for 20-cavity inserts must be ordered separately. They are:
■ CTA-0166—pin contact
■ CTA-0165—socket contact

Contacts accept 24 AWG to 20 AWG wires.

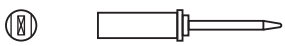

Pin Contact
CTA-0166

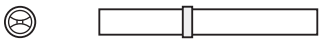

Socket Contact
CTA-0165

Tools		Tools	
Positioner for pin contact	CE-1605900	Positioner for socket contact	CE-1606000
Installation process	ES-61413	Installation process	ES-61413
Contact removal tool (plastic)	CTA-1160	Contact removal tool (plastic)	CTA-1160
Extraction tool for MTCP inserts	CTA-0161	Extraction tool for MTCP inserts	CTA-0161

Catalog 1308940
Revised 9-14

www.te.com

Dimensions are shown for reference purposes only. Specifications subject to change.

Dimensions are in millimeters unless otherwise specified.

USA: +1 800 522 6752
Asia Pacific: +86 0 400 820 6015
UK: +44 800 267 666

For additional support numbers please visit www.te.com

5-Cavity Inserts

5-Cavity Inserts (Size 16)

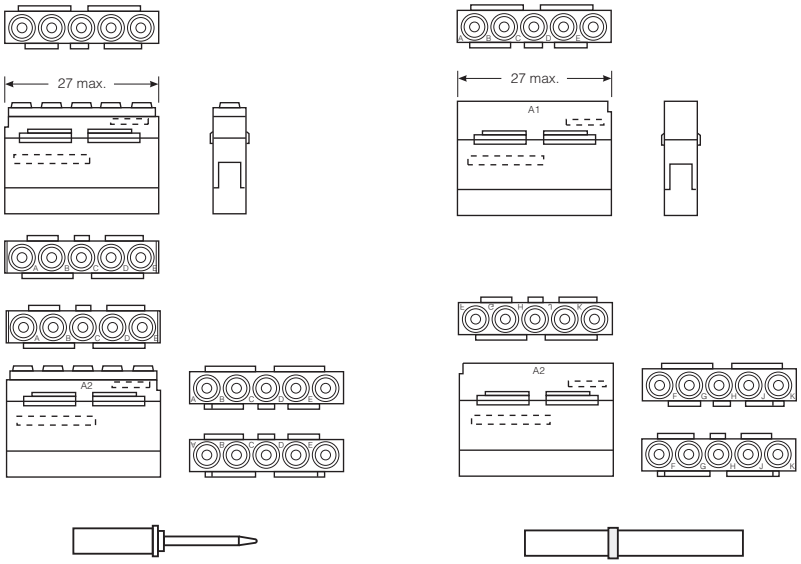

MTCP-116-05 inserts are used with MTC100 1-inch and 2-inch shells.
The 1-inch shell takes:

- One MTCP-116-05-P1 (pin contact) **or**
- One MTCP-116-05-S1 (socket contact)

The 2-inch shell takes:

- One MTCP-116-05P1 and one MTC-116-05P2 (pin contact) **or**
- One MTCP-116-05-S1 and one MTCP-116-05-S2 (socket contact)

5-Cavity Inserts (Size 16)	
Pin Insert	**Socket Insert**
MTCP-116-05P1	MTCP-116-05S1
MTCP-116-05P2	MTCP-116-05S2

Contacts for 5-Cavity Inserts

The contacts for 5-cavity inserts must be ordered separately. They include:

- CTA-0079 - pin contact (MS 27493-16) (MIL-C-39029/58 intermateable)
- CTA-0078 - socket contact (MS 27491-16) (MIL-C-39029/57 intermateable)
- D-602-0140 - coaxial pin contact (MIL-C-39029/76 intermateable)
- D-602-0171 - coaxial socket contact (MIL-C-39029/78 intermateable)

Other contacts designed for M38999 Series II connectors can be used.

Pin Contact	Socket Contact
D-602-0140 (coaxial)	D-602-0171 (coaxial)
CTA-0079 (power)	CTA-0078 (power)

Dimensions are shown for reference purposes only. Specifications subject to change.

Dimensions are in millimeters unless otherwise specified.

USA: +1 800 522 6752
Asia Pacific: +86 0 400 820 6015
UK: +44 800 267 666

For additional support numbers please visit www.te.com

Hybrid Inserts

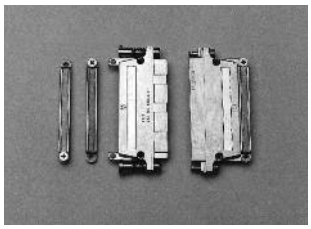

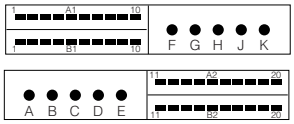

Plug **Receptacle**

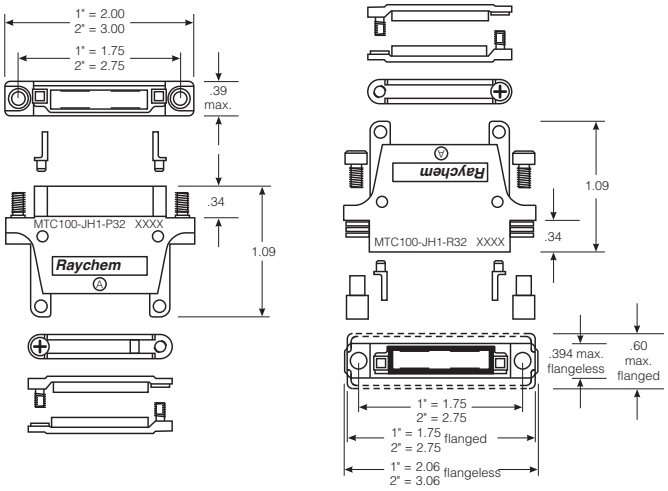

Hybrids

Hybrid insert combinations of size 22 and size 16 contact cavities are also possible.
2-Inch Shell—Hybrid Assembly
Power and signal

Shells

MTC connector housing shells are available with nickel plating (48-hr salt spray performance) or cadmium over nickel plating (500-hr salt spray performance).

MTC connector housings are offered with quick-disconnect or jack-screw mating hardware. Each connector shell is polarized and has 64 user-defined keying combinations. Lightweight, low-profile EME backshells are also available for increased shielding effectiveness of the connector.

Dimensions are shown for reference purposes only. Specifications subject to change.

Dimensions are in millimeters unless otherwise specified.

USA: +1 800 522 6752
Asia Pacific: +86 0 400 820 6015
UK: +44 800 267 666

For additional support numbers please visit www.te.com

MTC Shells Ordering Information

M T C 1 0 0 X - X H X - X X2

2 = Nickel plating.
48-hr salt spray test performance
3 = Cadmium over nickel plating.*
500-hr salt spray test performance

P = Plug housing
R = Receptacle housing, flangeless
F = Receptacle housing, flanged

1 = 1"
2 = 2"

J = Standard housing
S = EMI housing

Q = Quick-disconnect mating hardware (connector performance per Tyco Electronics specification C-6114)

Blank = Jack-screw mating hardware (connector performance per Tyco Electronics specification C-6115)

*Some combinations of shells, mating hardware and EME shielding accessories are not available. Contact TE Connectivity for product information.

Catalog 1308940
Revised 9-14

www.te.com

Dimensions are shown for reference purposes only. Specifications subject to change.

Dimensions are in millimeters unless otherwise specified.

USA: +1 800 522 6752
Asia Pacific: +86 0 400 820 6015
UK: +44 800 267 666

For additional support numbers please visit www.te.com

Accessories

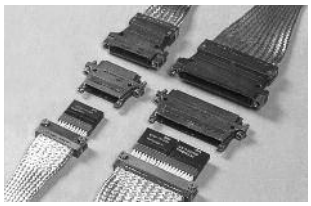

Low-Profile EME Backshells

Lightweight rectangular EME backshells connect the overall bundle shield to the MTC connector housing. Individual cable shields can also be terminated to the backshell braid by using SolderSleeve devices.

The backshell is mounted on the MTC housing via the cable clamp screws.

MTC backshell features include a low profile, light weight, and Level II EME performance.

EME Backshell Adapters

CHA-0275	2-inch adapter (plug or receptacle)
CHA-0276	1-inch adapter (plug or receptacle)

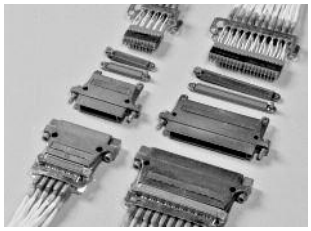

MTC Shield-Grounding BusBars

MTC shield-grounding busbars allow for simple, cost-effective termination of cable shielding to MTC aluminum housings.

Two-inch shield-grounding busbars terminate up to 20 shielded twisted pairs on a 2-inch MTC connector. The individual shields are terminated to “fingers” on the busbar with SolderSleeve devices.

The busbar is mounted on the MTC housing via cable clamp screws.

MTC busbar features include a simple termination, cost effectiveness, light weight, and Level I EME performance.

Shield-Grounding Busbars

CTA-0022	1-inch busbar (with 5 SolderSleeve terminators)
CTA-0023	2-inch busbar (with 10 SolderSleeve terminators)

EME Shielding Accessories for MTC Connectors

Grounding Block (Externally attached)
Allows for cable shield termination grounding on the MTC shell housing via crimp-removable contacts. This grounding scheme allows individual cables to be removed from the connector without cutting a ganged ground connection. Sufficient ground contacts are available to handle shielded twisted-pair cables.

Grounding Block

CHA-0305	1-inch grounding block receptacle shell
CHA-0306	2-inch grounding block receptacle shell
CHA-0307	1-inch grounding block plug shell
CHA-0308	2-inch grounding block plug shell

Catalog 1308940
Revised 9-14

www.te.com

Dimensions are shown for reference purposes only. Specifications subject to change.

Dimensions are in millimeters unless otherwise specified.

USA: +1 800 522 6752
Asia Pacific: +86 0 400 820 6015
UK: +44 800 267 666

For additional support numbers please visit www.te.com

MTCR Size 12 Connectors

Product Facts

- **Low-profile rectangular design for high packaging density**
- **Environmental sealing for aerospace applications**
- **64 user-defined keying positions for logistics savings**
- **4 contact cavities per 1” shell**

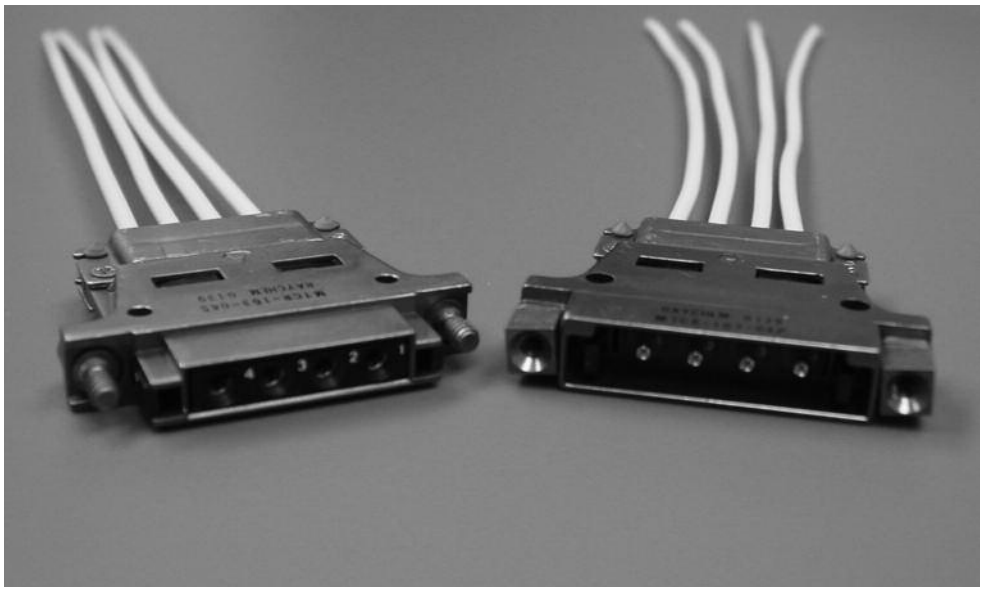

TE Connectivity MTCR connectors are rectangular, lightweight, and environmentally-sealed, with individually removable rear-release size 12 contacts.

The MTCR connector’s size 12 cavities accept four standard MIL-C-83723 Series III contacts for twisted pairs, coax, triax, and 12 to 14 AWG power cables.

MTCR connectors are available with flanged receptacles and a variety of accessories, including EME backshells.

MTCR connectors are qualified to TE Specification C-6115.

Catalog 1308940
Revised 9-14

www.te.com

Dimensions are shown for reference purposes only. Specifications subject to change.

Dimensions are in millimeters unless otherwise specified.

USA: +1 800 522 6752
Asia Pacific: +86 0 400 820 6015
UK: +44 800 267 666

For additional support numbers please visit www.te.com

MTCR Size 12 Connectors (Continued)

Connectors

Pin-Cavity Plug Shell
MTCR-163-04P

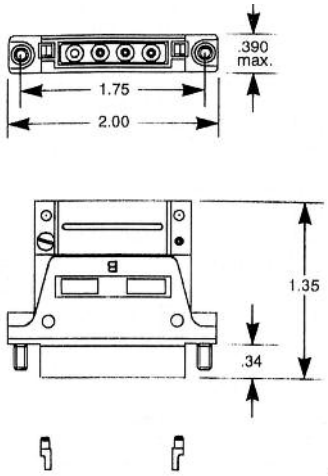

Pin-Cavity Receptacle Shell
MTCR-103-04P

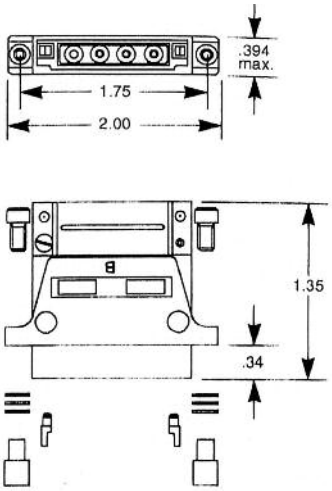

Socket-Cavity Plug Shell
MTCR-163-04S

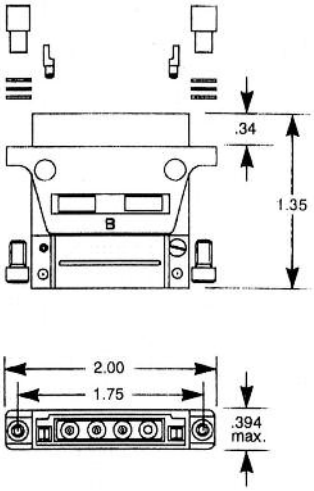

Socket-Cavity Receptacle Shell
MTCR-103-04S

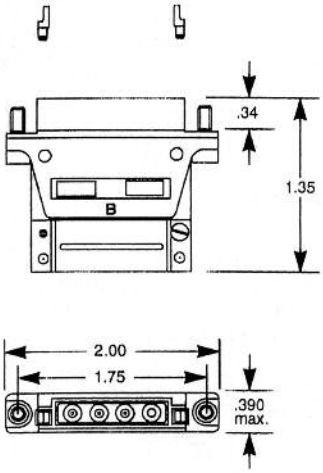

Contacts

Cable Type	12 AWG Power Cable	0.100" Max. Coaxial Cable	0.126" Max Coaxial Cable	Twisted Pair Cable
Pin Contact	CTA-0114 (MIL-C-39029/4)	D-602-0094 (MIL-C-39029/74)	D-602-0106 (MIL-C-39029/74)	D-602-0104 (MIL-C-39029/74)
Socket Contact	CTA-0115 (MIL-C-39029/5)	D-602-0095 (MIL-C-39029/73)	D-602-0107 (MIL-C-39029/73)	D-602-0105 (MIL-C-39029/73)

Note:
Various options are available. Please see customer drawings or contact TE Connectivity.

Tooling

Sealing Plugs (for unused cavities): MS27488-12
Contact Insertion/Removal Tool: M81969/14-04

Catalog 1308940
Revised 9-14

www.te.com

Dimensions are shown for reference purposes only. Specifications subject to change.

Dimensions are in millimeters unless otherwise specified.

USA: +1 800 522 6752
Asia Pacific: +86 0 400 820 6015
UK: +44 800 267 666

For additional support numbers please visit www.te.com

EME Shielding Accessories for MTC Connectors

Low Profile EME Backshells

Product Facts

- Low profile
- Lightweight
- Level II EME performance for hardened applications*

MTC Busbar

Product Facts

- Simple termination
- Lightweight
- Cost effective
- Level I EME performance*

TE Connectivity Raychem brand of MTC Shield-Grounding Busbars allow for simple, cost-effective termination of cable shielding to MTC aluminum housings.

Two-inch shield-grounding busbars terminate up to 20 shielded twisted pairs on a 2” MTC connector. The individual shields are terminated to “fingers” on the busbar with Raychem brand SolderSleeve devices.

The busbar is mounted on the MTC housing via the cable clamp screws.

TE also offers lightweight, rectangular EME backshells that connect the overall bundle shield to the MTC connector housing. Individual cable shields can also be terminated to the backshell braid by using Raychem brand SolderSleeve devices.

The backshell is mounted on the MTC housing via the cable clamp screws.

Screening

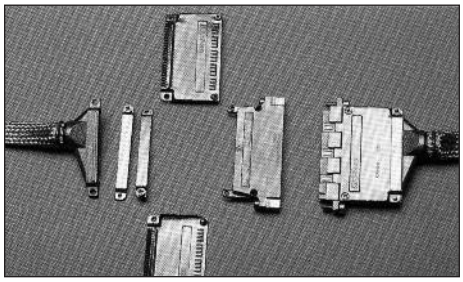

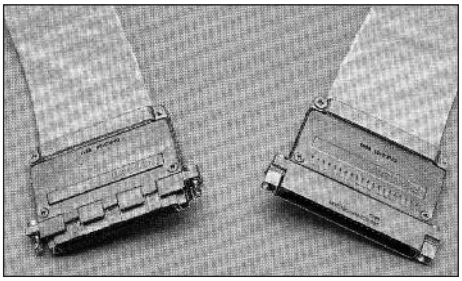

*Per TE Specifications C-6111 for connectors with fixed contacts and C-6115 for connectors with removable contacts.

Catalog 1308940
Revised 9-14

www.te.com

Dimensions are shown for reference purposes only. Specifications subject to change.

Dimensions are in millimeters unless otherwise specified.

USA: +1 800 522 6752
Asia Pacific: +86 0 400 820 6015
UK: +44 800 267 666

For additional support numbers please visit www.te.com

EME Shielding Accessories for MTC Connectors (Continued)

Shielding-Grounding Busbars

CTA-0022 = 1-inch busbar
(with 5 SolderSleeve terminators)
CTA-0023 = 2-inch busbar
(with 10 SolderSleeve terminators)
CTA-0024 = SolderSleeve terminator

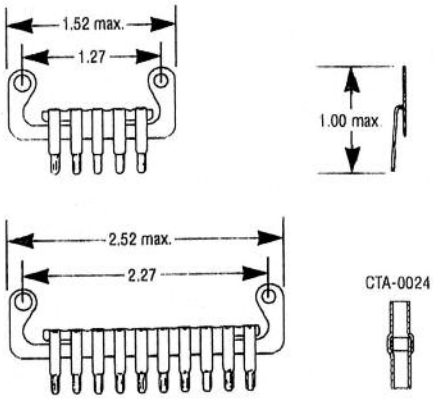

Typical Surface Transfer Impedance (Z_t)
2-inch CTA-0023
(with shielded twisted pairs)

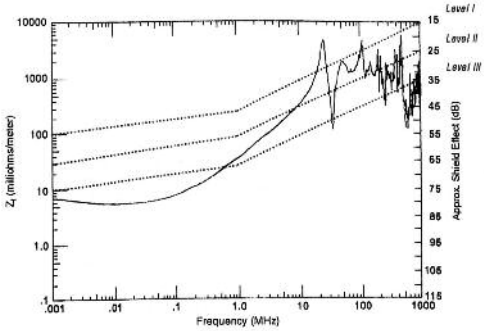

EME Backshell Adapters

CHA-0275 = 2-inch adapter
(plug or receptacle)
CHA-0276 = 1-inch adapter
(plug or receptacle)

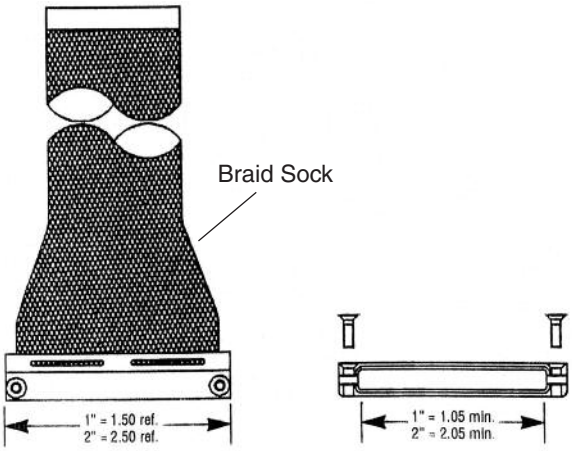

Typical Surface Transfer Impedance (Zt)
1-inch CTA-0276 (with overall shielded wire bundle)

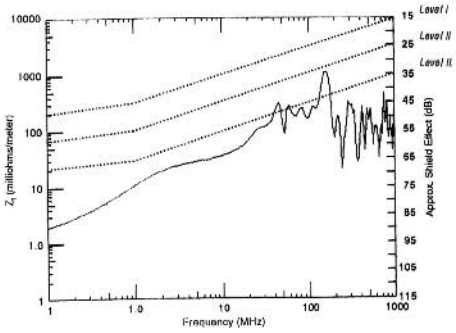

Dimensions are shown for reference purposes only. Specifications subject to change.

Dimensions are in millimeters unless otherwise specified.

USA: +1 800 522 6752
Asia Pacific: +86 0 400 820 6015
UK: +44 800 267 666

For additional support numbers please visit www.te.com

MTC Boxmount Connectors

Size 22 Connectors

Product Facts

- **Fixed size 22 contacts on 100-mil centers**
- **Compact, lightweight design**
- **Variety of configurations**
- **Termination flexibility:**

  Direct mount onto circuit boards
  Solderless wire wrap
  Variety of SolderSleeve terminations

Size 16 Connectors

Product Facts

- **Removable size 16 MIL-C-38999 Series II contacts on 200-mil centers**
- **Compact, lightweight design**

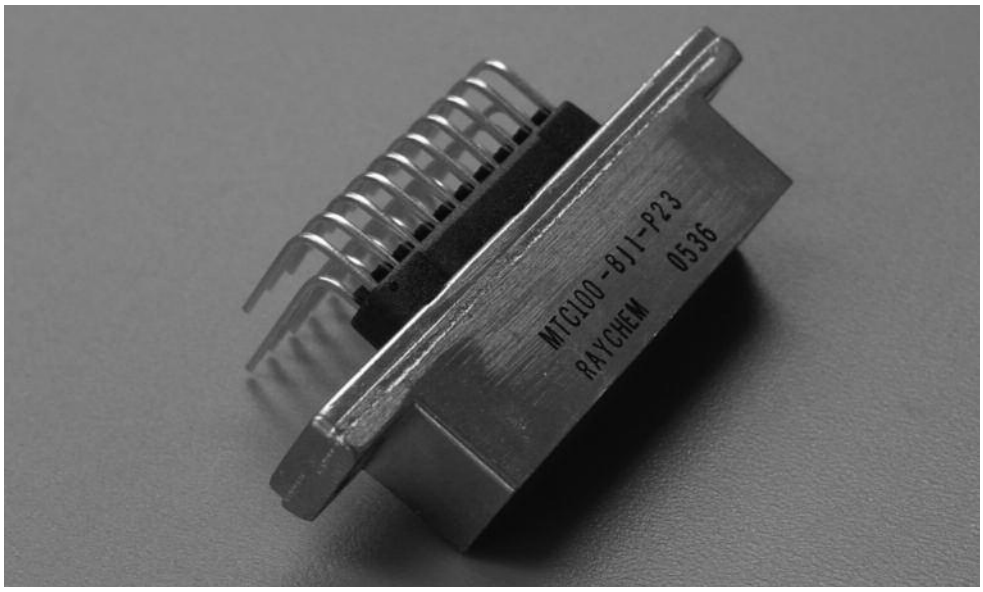

TE Connectivity offers an extensive line of MTC boxmounted connectors to complement the MTC cable connectors.

MTC boxmount connectors are lightweight, high-density, one-piece receptacles with fixed pin or socket inserts.

Boxmounted MTC connectors allow for a high density of interconnections while utilizing a minimum of interior box space.

MTC boxmounts are available with either size 22 or size 16 contacts.

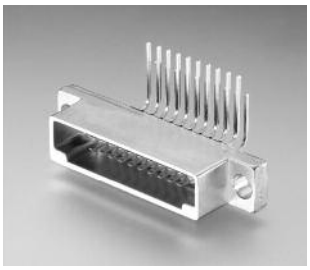

Boxmount Connector Part Numbers

M T C X X X - B X X - X 3 X

- Tail Type
  1 = Long tail; 2 = Short tail; 3 = 90˚; 4 = Removable contact
- Plating
  Cadmium over nickel
- Contact Type
  P = Pin; S = Socket
- Connector Size
  1 = 1 inch; 2 = 2 inch
- Shell Type
  F = Flanged with standard gasket
  S = Shielded/EME gasket included
- Insert/Cavity Type
  100 = 100 mil/size 22; P = 200 mil/size 16

Catalog 1308940
Revised 9-14

www.te.com

Dimensions are shown for reference purposes only. Specifications subject to change.

Dimensions are in millimeters unless otherwise specified.

USA: +1 800 522 6752
Asia Pacific: +86 0 400 820 6015
UK: +44 800 267 666

For additional support numbers please visit www.te.com

MTC Selection Guide

Total Number	Contacts Number	Contacts Size	Arrangement	Possible Round Wire AWG Min.	Possible Round Wire AWG Max.	Possible Flat Cable AWG Min.	Possible Flat Cable AWG Max.	Family Shell	Shell Size
4	4	12		16	12			MTCR	1
5	5	16		20	16			MTC100	1
10	2x5	16		20	16			MTC100	2
10	10 Dummy wafer	22		26	20	24	22	MTC100	1
20	2x10	22		26	20	24	22	MTC100	1
20	20 Dummy wafer	26		28	24		28	MTC50	1
20	2x10 Dummy wafer	22		26	20	24*	22*	MTC100	2
20	20 Dummy wafer	22		26	20	24	22	MTC100	2
25	5 2x10	16 22		20 26	16 20	 24	 22	MTC100	2
30	10 20	22 26		26 28	20 24	24	22 28	MTC50	1
40	2x20	26		28	24		28	MTC50	1
40	20 2x10	22		26	20	24*	22*	MTC100	2
40	4x10	22		26	20	24*	22*	MTC100	2
40	40 Dummy wafer	26		28	24		28	MTC50	2
40	2x20	22		26	20	24	22	MTC100	2
60	20 40	22 26		26 28	20 24	24	22 28	MTC50	2
60	2x10 40	22 26		26 28	20 24	24*	22* 28	MTC50	2
80	2x40	26		28	24		28	MTC50	2

*Two 4-way wafers FCC cannot be mounted together in a same size 2 shell.

Catalog 1308940
Revised 9-14

www.te.com

Dimensions are shown for reference purposes only. Specifications subject to change.

Dimensions are in millimeters unless otherwise specified.

USA: +1 800 522 6752
Asia Pacific: +86 0 400 820 6015
UK: +44 800 267 666

For additional support numbers please visit www.te.com

MTC100 Connectors

Product Facts

- 10 or 20 contacts size 22 2.54 mm (0.100 in.) spacing
- 20 or 40 contacts size 22 2.54 mm (0.100 in.) spacing
- Round wire 20-26 AWG or flat cable 22-24 AWG
- -65˚C to +125˚C -65˚C to +150˚C
- TE Connectivity Specification C-6111
- Three shell finishes: Black anodized (non-conductive), Nickel plated (conductive) and Cadmium over nickel (500 h salt spray)

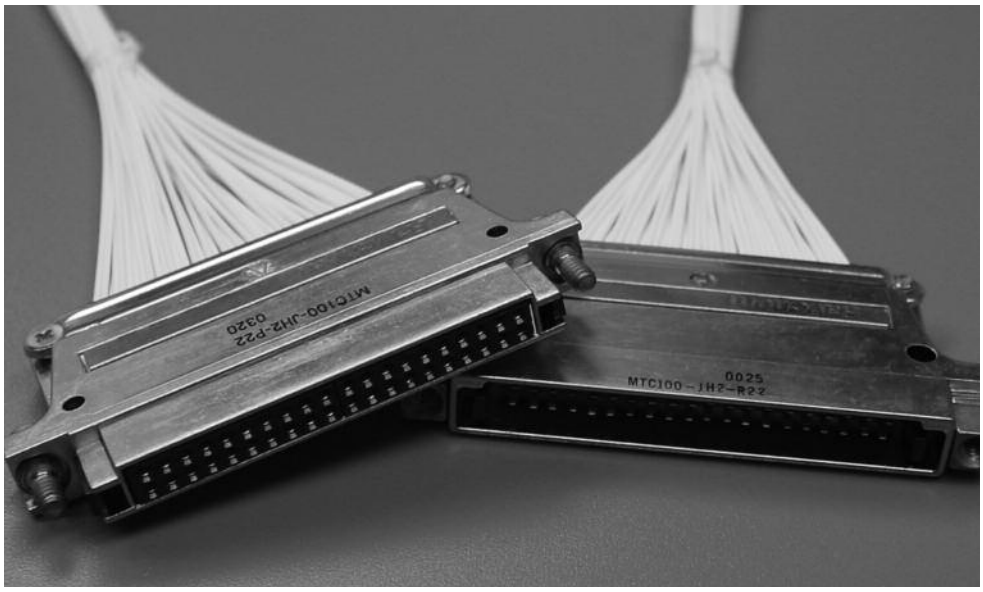

The basic connector consists of the following modular components: two shells (plug and receptacle), mounting hardware and keying pins. In each shell are included two removable wafers with either 10 or 20 fixed contacts, 2.54mm (0.100 in.) spacing.

These wafers, pin or socket, are available in two versions to receive either round wire or flat conductor cable or flexible printed circuits. It is recommended to use TE flat cable with rectangular section conductors, perfectly adapted to the contacts shape of the connector.

The wafers use a tuning fork type contact design, which corresponds to the requirements of MIL-C-28754. Both pin and socket contacts are fixed in the wafer. The pin contact is molded into the wafer while the socket contact has a degree of free movement.

Environmental sealing is achieved by:

- an integral interfacial seal which is attached to the face of the pin wafer. This seal is compressed when the connector is mated.
- a thermoplastic material which seals the wafer body to the wire during soldering

The MTC100 is available in two sizes:

Size 1:
20 contacts, 2.54mm (0.100 in.) spacing 2 rows of contacts

Size 2:
40 contacts, 2.54mm (0.100 in.) spacing 2 rows of contacts

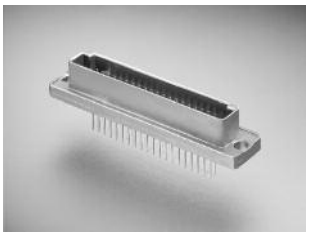

The connector contact is terminated to the wire by controlled soldering using a heat-shrinkable SolderSleeve. This well-known technology achieves a high degree of electrical performance and allows semi-automated termination.

The EME protection continuity can be achieved by additional components. Polarization of shells and wafers prevents mis-mating.

Catalog 1308940
Revised 9-14

www.te.com

Dimensions are shown for reference purposes only. Specifications subject to change.

Dimensions are in millimeters unless otherwise specified.

USA: +1 800 522 6752
Asia Pacific: +86 0 400 820 6015
UK: +44 800 267 666

For additional support numbers please visit www.te.com

MTC100 Connectors (Continued)

Technical Specification

Materials	
Shell	Aluminum alloy per QQ-A-591
Shell Finish	Nickel plated (MIL-C-26074) or Black anodized (MIL-C-8625) or Cadmium plated (QQ-P-416)
Hardware	Passivated stainless steel
Wafer	Polyarylene thermoplastic
Interfacial Seal	Silicone elastomer
Termination Insulation	Transparent blue heat-shrinkable radiation cross-linked PVF2
Contact	Engaging end: copper alloy gold plated over nickel underplate per MIL-G-45204; type 1, Grade C, class 1 Termination end: Sn 63 pre-tinning (125˚C) or SN96 (150˚C) per QQ-S-571
Technical Data and Performance	
Contact Spacing	2.54 mm
Insulation Resistance	5000 MΩmin. / 23˚C
DWV	1500 VAC-RMS 50-60 Hz/Sea level 1500 V eff (round wire) 1000 V eff (flat conductor flat cable)
Current Rating	1.5A per request
Temperature Range	-65˚C to 125˚C or -65˚C to 150˚C
Contact Resistance (low current)	MIL-STD-1344 method 3002 before aging 18mΩ/ after aging 21 mΩ/ wire size 0.4mm²
Shell to shell conductivity (except black anodized non-conductive)	2.5mV (1 A dc)
Vibration	MIL-STD-1344, method 2005 condition VI-Letter J
Mechanical Shock	MIL-STD-1344, method 2004 condition D
Temperature Aging	1000 h 125˚C 1000 MΩmin. at T max. 5000 MΩmin. 23˚C
Humidity	90-98% RH 10 cycles 100 MΩmin.
Altitude Immersion	30 minutes at 21000 M 5000MΩmin. (MIL-STD-1344, method 1004)
Salt Spray	5% salt / 48h or 500 h (cadmium plated) (MIL-STD-1344 method 1001 Condition B)
Fluid Resistance	MIL-STD-1344 method 1016
Contact engagement and separation forces	Engagement: 3.3 N Max. per contact Separation: 0.2 N min. per contact
Durability	500 cycles (including mounting hardware)
Contact Retention	45 N min. (MIL-STD-1344 method 2007)
Wafer Retention	Size 1: 178N Size 2: 356N (MIL-STD-1344, method 2010)
Wire Sizes	FCC MIL-C-49059: 0.25mm²-0.4mm² (22-24 AWG) Round wire 0.15mm²-0.34mm² (20-26 AWG) For AWG 18 or 20, contact TE Connectivity.

Dimensions are shown for reference purposes only. Specifications subject to change.

Dimensions are in millimeters unless otherwise specified.

USA: +1 800 522 6752
Asia Pacific: +86 0 400 820 6015
UK: +44 800 267 666

For additional support numbers please visit www.te.com

MTC50 Connectors

Product Facts

- 20 or 40 contacts size 26 1.27 mm (0.050 in.) spacing
- 40 or 80 contacts size 26 1.27 mm (0.050 in.) spacing
- AWG 24-28 (round wire) or 28 (flat cable)
- -65˚C to +125˚C
- TE Connectivity Specification C-6111
- Three shell finishes: Black anodized (non-conductive), Nickel plated (conductive) and Cadmium over nickel (500 h salt spray)

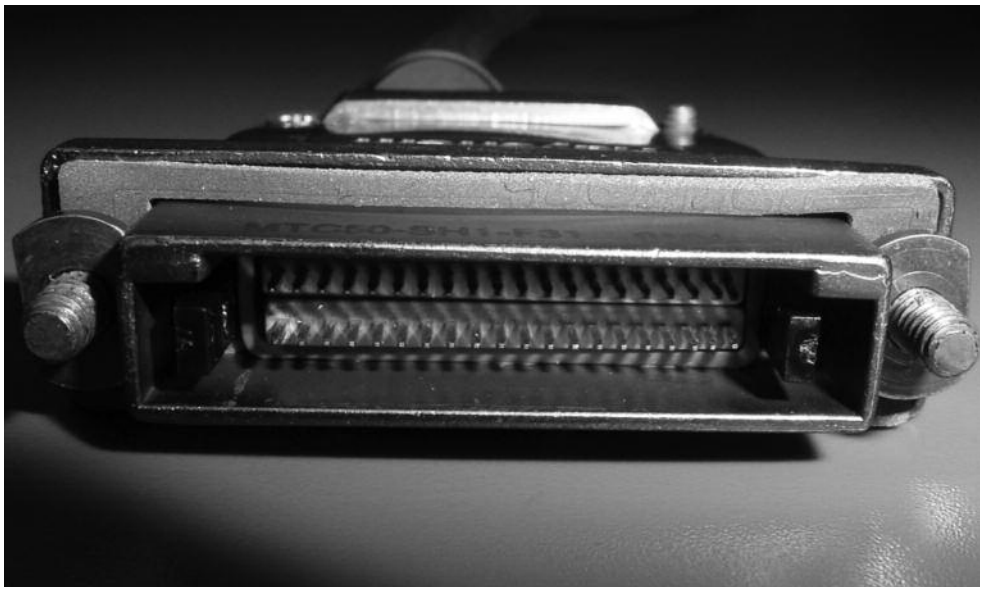

The basic connector consists of the following modular components: two shells (plug and receptacle), mounting hardware and keying pins. In each shell are included two removable wafers with either 20 or 40 fixed contacts, 1.27mm spacing.

These wafers, pin or socket, are available in two versions to receive either round wire or flat conductor cable or flexible printed circuits. It is recommended to use TE flat cable with rectangular section conductors, perfectly adapted to the contacts shape of the connector.

The wafers use a tuning fork type contact design. Both pin and socket contacts are fixed in the wafer. The pin contact is molded into the wafer while the socket contact has a degree of free movement.

Environmental sealing is achieved by:

- an integral interfacial seal which is attached to the face of the pin wafer. This seal is compressed when the connector is mated.
- a thermoplastic material which seals the wafer body to the wire during soldering

The MTC50 is available in two sizes:

Size 1:
40 contacts, 1.27mm (0.050 in.) spacing 2 rows of contacts

Size 2:
80 contacts, 1.27 mm (0.050 in.) spacing 2 rows of contacts

The connector contact is terminated to the wire by controlled soldering using a heat-shrinkable boot. This well-known technology achieves a high degree of electrical performance and allows semi-automated termination.

The EME protection continuity can be achieved by additional components. Polarization of shells and wafers prevents mis-mating.

Catalog 1308940
Revised 9-14

www.te.com

Dimensions are shown for reference purposes only. Specifications subject to change.

Dimensions are in millimeters unless otherwise specified.

USA: +1 800 522 6752
Asia Pacific: +86 0 400 820 6015
UK: +44 800 267 666

For additional support numbers please visit www.te.com

MTC50 Connectors (Continued)

Technical Specification

Materials	
Shell	Aluminum alloy per QQ-A-591
Shell Finish	Nickel plated (MIL-C-26074) or Black anodized (MIL-C-8625) or Cadmium plated (QQ-P-416)
Hardware	Passivated stainless steel
Wafer	Polyarylene thermoplastic
Interfacial Seal	Silicone elastomer
Termination Insulation	Transparent blue heat-shrinkable radiation cross-linked PVF2
Contact	Engaging end: copper alloy gold plated over nickel underplate per MIL-G-45204; type 1, Grade C, class 1 Termination end: Sn 63 pre-tinning (125˚C) or SN96 (150˚C) per QQ-S-571
Technical Data and Performance	
Contact Spacing	1.27 mm
Insulation Resistance	5000 MΩmin. / 23˚C
DWV	750 VAC-RMS 50-60 Hz/Sea level
Current Rating	1.5A per request
Temperature Range	-65˚C to 125˚C
Contact Resistance (low current)	Wire size/before aging/after aging 0.1mm² 43mΩ51mΩ
Shell to shell conductivity (except black anodized non-conductive)	2.5mV (1 A dc)
Vibration	MIL-STD-1344, method 2005 condition VI-Letter J
Mechanical Shock	MIL-STD-1344, method 2004 condition D
Temperature Aging	1000 h 125˚C 1000 MΩmin. 125˚C 5000 MΩmin. 23˚C
Humidity	MIL-STD-1344 Method 1002 Type II, 100 MΩmin.
Altitude Immersion	30 minutes at 21000 M 5000MΩmin. (MIL-STD-1344, method 1004)
Salt Spray	5% salt / 48h or 500 h (cadmium plated) (MIL-STD-1344 method 1001 Condition B)
Fluid Resistance	MIL-STD-1344 method 1016
Contact engagement and separation forces	Engagement: 2.20 N Max. per contact Separation: 0.14 N min. per contact
Durability	500 cycles (including mounting hardware)
Contact Retention	22 N min. (MIL-STD-1344 method 2007)
Wafer Retention	Size 1: 178N Size 2: 356N (MIL-STD-1344, method 2010)
Wire Sizes	FCC MIL-C-49059: 0.1mm² (28 AWG) Round wire 0.1mm²-0.15mm² (24-28 AWG)

Catalog 1308940
Revised 9-14

www.te.com

Dimensions are shown for reference purposes only. Specifications subject to change.

Dimensions are in millimeters unless otherwise specified.

USA: +1 800 522 6752
Asia Pacific: +86 0 400 820 6015
UK: +44 800 267 666

For additional support numbers please visit www.te.com

MTCP 20 Cavity Inserts

Product Facts

- **20 cavity inserts**
- **Size 22-20 contacts**

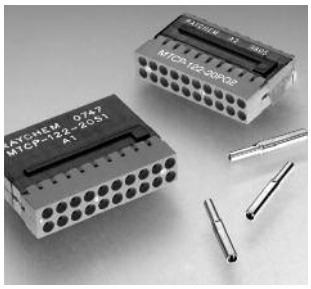

MTCP inserts have been redesigned to include size 22 cavity which can accept 22-20 crimp contacts.

Insertion/extraction of contacts are rear release.

This series completes the MTC100 and MTC50 mass termination families. It extends the crimp version product range from size 12 (MTCR) to size 16 and 20 (MTCP).

MCTP 22-20 inserts are intermateable and changeable with MTC100 connectors.

They keep the same high performance level.

2" shell Pin Insert
MTCP-122-20P1
MTCP-122-20P2

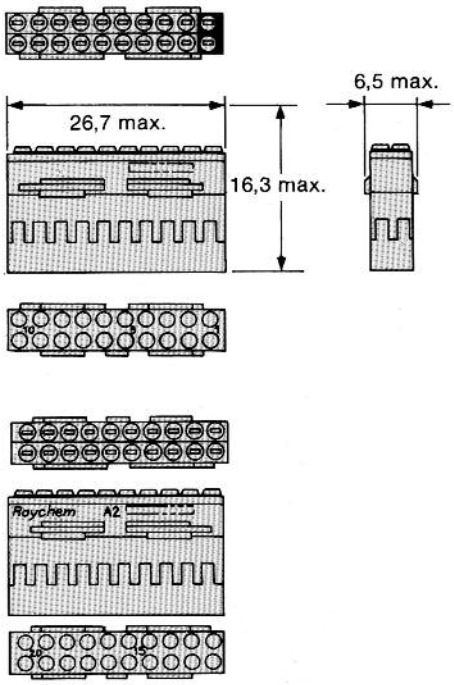

2" shell Socket Insert
MTCP-122-20S1
MTCP-122-20S2

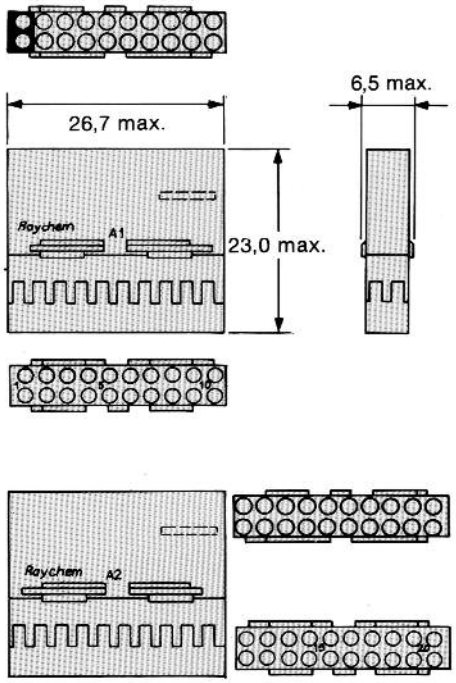

1" shell Pin Insert
MTCP-122-20P

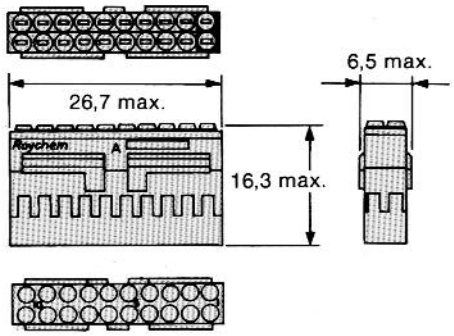

1" shell Socket Insert
MTCP-122-20S

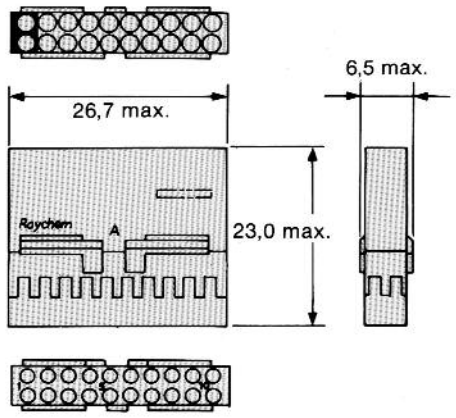

Pin Contact
CTA-0166

Socket Insert
CTA-0165

Contact removal tool (plastic):
CTA-1160
Extraction tool for MTCP inserts:
CTA-0161
Positioner for pin contact:
CE-1605900
Positioner for socket socket:
CE-1606000

Catalog 1308940
Revised 9-14

www.te.com

Dimensions are shown for reference purposes only. Specifications subject to change.

Dimensions are in millimeters unless otherwise specified.

USA: +1 800 522 6752
Asia Pacific: +86 0 400 820 6015
UK: +44 800 267 666

For additional support numbers please visit www.te.com

MTCT High Performance Modular Rectangular Connectors

for use with ARINC 801 Optical Termini

Product Facts

- **Available in aluminum or corrosion resisting steel**
- **Utilizes the industry standard ARINC 801 optical termini - no empty cavities requiring sealing**
- **Mating hardware options - available in quick disconnect or jack screw styles for optimized space utilization**
- **Accommodates four ARINC 801 optical termini**
- **Enhanced MTCT mating interface**
- **Uses commonly available tooling for installation - no need to carry extra specialized tooling**

TE Connectivity MTCT connector is a compact, lightweight design connector for use with ARINC 801 fiber optic termini.

Ideal for applications such as avionics, in-flight entertainment systems, communications, production breaks and other areas.

Part Number Information

MTCTQ KT 1 X 4 X F XX

- XX = Keying Pin Codes (See Table 1)
- F = Without Ground Block
- X = P: Pin Insert / S: Socket Insert
- 4 = 4: Cavities
- X = P: Plug Shell / R: Receptacle Shell
- 1 = 1 Inch
- KT = Kit
- MTCTQ = Fiber Optic Connector with Quick Disconnect Hardware

TABLE I KEYING CODES

POSITION OF PROJECTING TAB (TYP)		
	–A A–	
	–A B–	
	–A C–	
	–A D–	
	–B A–	
	–B B–	
	–B C–	
	–B D–	
	–C A–	
	–C B–	
	–C C–	
	–C D–	
	–D A–	
	–D B–	
	–D C–	
	–D D–	
UNKEYED	–X X–	UNKEYED
RECEPTACLE	CODE	PLUG

Catalog 1308940
Revised 9-14

www.te.com

Dimensions are shown for reference purposes only. Specifications subject to change.

Dimensions are in millimeters unless otherwise specified.

USA: +1 800 522 6752
Asia Pacific: +86 0 400 820 6015
UK: +44 800 267 666

For additional support numbers please visit www.te.com

MTCT High Performance Modular Rectangular Connectors (Continued)

Kit, Plug and Receptacle

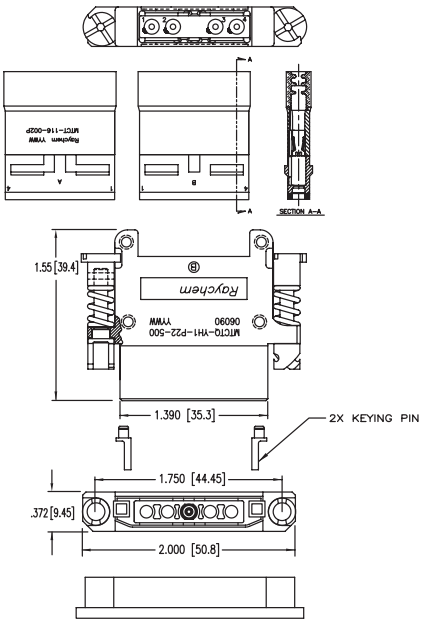

PLUG SHELL WITH PIN INSERT
MTCTQKT1P4PF

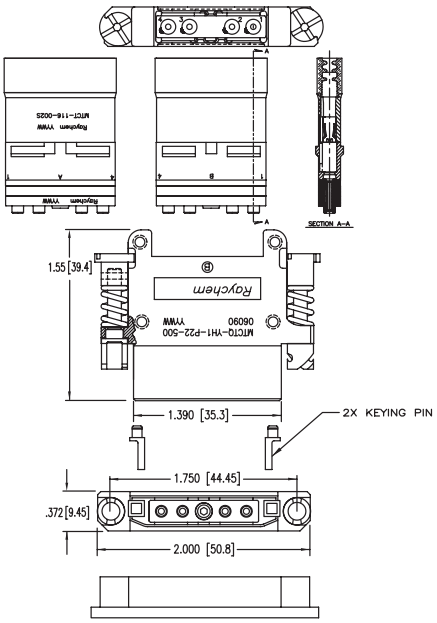

PLUG SHELL WITH SOCKET INSERT
MTCTQKT1P4SF

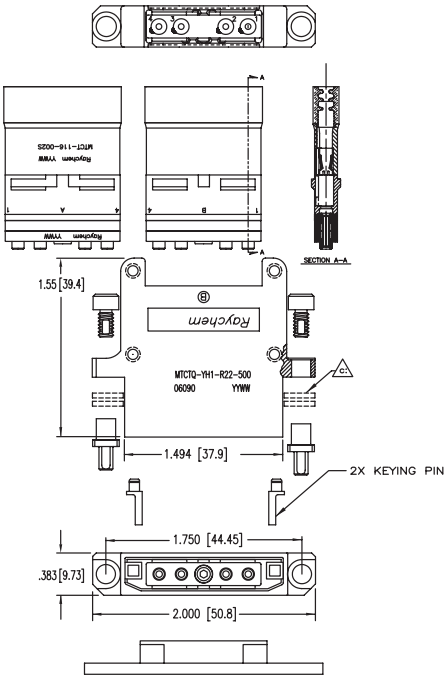

RECEPTACLE SHELL WITH SOCKET INSERT
MTCTQKT1R4SF

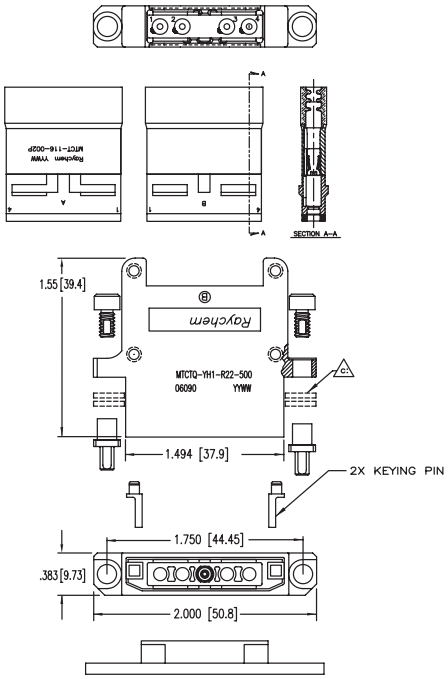

RECEPTACLE SHELL WITH PIN INSERT
MTCTQKT1R4PF

Catalog 1308940
Revised 9-14

www.te.com

Dimensions are shown for reference purposes only. Specifications subject to change.

Dimensions are in millimeters unless otherwise specified.

USA: +1 800 522 6752
Asia Pacific: +86 0 400 820 6015
UK: +44 800 267 666

For additional support numbers please visit www.te.com

Screening

Round Wire

The following terminal strips must be used to connect screening to the body of an MTC 100 housing:

Size 1 housing:
Type CTA-0022
Size 2 housing:
Type CTA-0023

The strips are connected to the screening using SolderSleeve devices, and secured by the connector cable clamp.

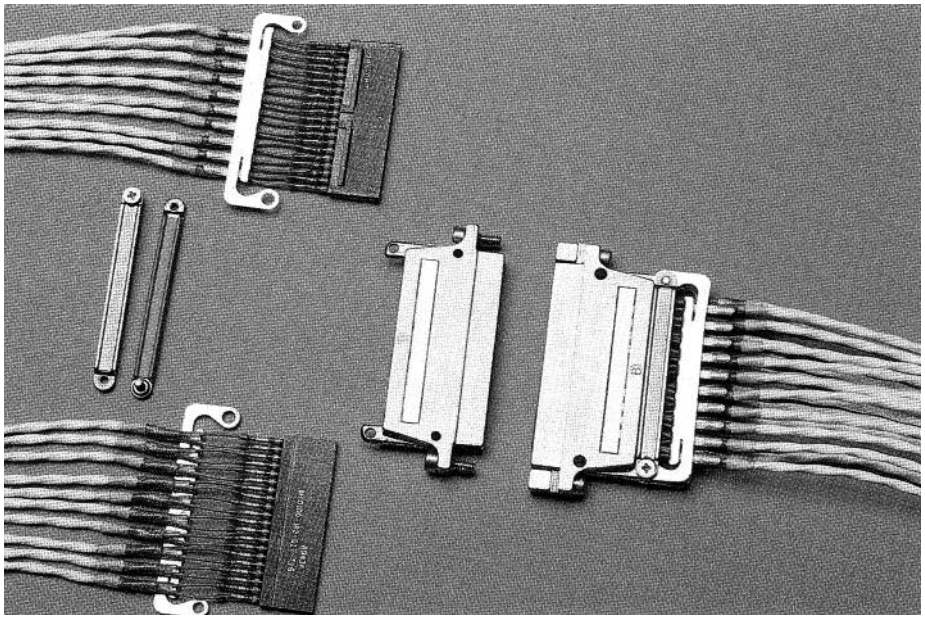

Ribbon Cable

With ribbon cables, the screening is provided by a copper strip.

The copper strip is connected using different terminal strips in accordance with the electrical diagram (contact TE Connectivity).

In any case, the terminal strips and block must be connected at the same time in the T.C.W.I. heating device (CE-1404300).

The assembly is contained in the connector housing, and does not alter the overall dimensions of the latter.

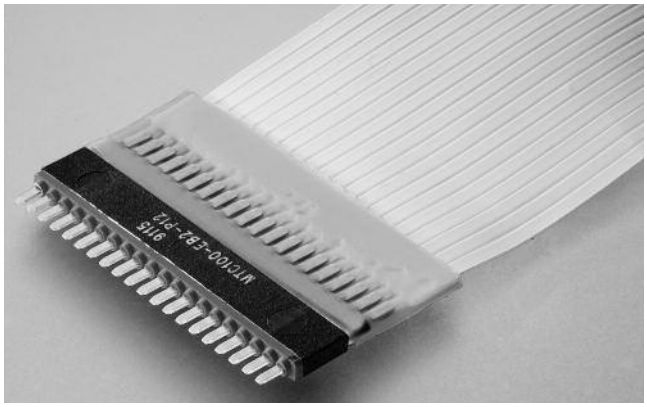

Unscreened cable shown above.

Catalog 1308940
Revised 9-14

www.te.com

Dimensions are shown for reference purposes only. Specifications subject to change.

Dimensions are in millimeters unless otherwise specified.

USA: +1 800 522 6752
Asia Pacific: +86 0 400 820 6015
UK: +44 800 267 666

For additional support numbers please visit www.te.com

Application and Installation

Panel cut out for boxmount connectors and receptacle shells

Cut out dimensions opposite are for guidance only. Panel cut out and spacing dimensions must be derived from the current Specification Control Drawing.

Hole Pattern for PCB

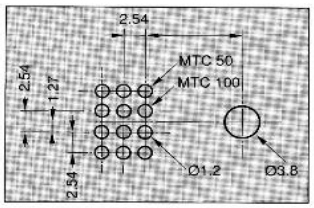

Panel Cut Out for 1" Shell

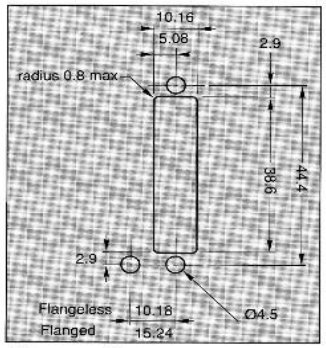

* (Rear mounting)

Panel Cut Out for 2" Shell

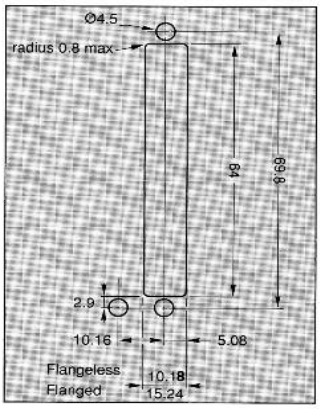

Keying Chart

Both the shell and the wafer have their own built in polarization.

Keying of the shell is completed by the user. Two square keying pins are supplied with each shell and should be inserted into the square sockets in the shell according to one of the 16 keying codes to the right.

Any "keyed" shell may be modified to a different polarization by repositioning the keying pins.

A triangular keying pin is available, giving up to 64 different polarizations.

Triangular keying pin:
CHA-0036

Triangular keying chart:
D-659-0080

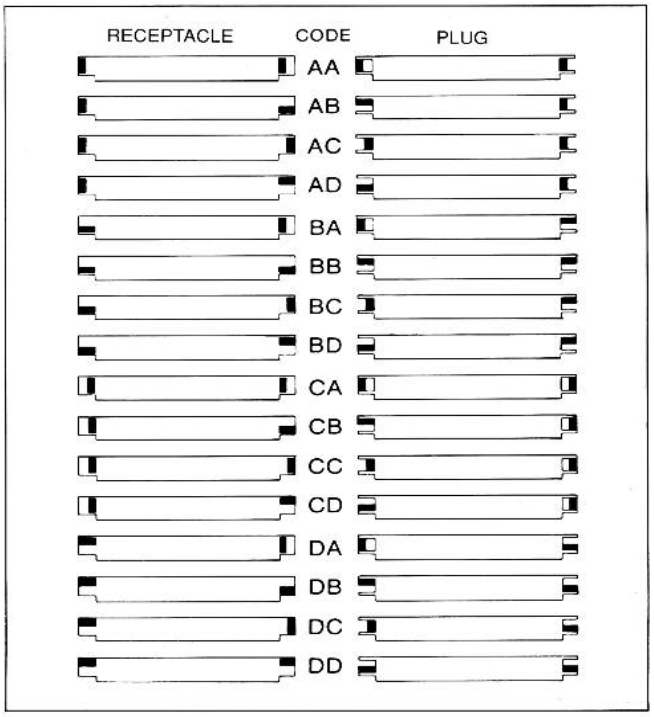

Catalog 1308940
Revised 9-14

www.te.com

Dimensions are shown for reference purposes only. Specifications subject to change.

Dimensions are in millimeters unless otherwise specified.

USA: +1 800 522 6752
Asia Pacific: +86 0 400 820 6015
UK: +44 800 267 666

For additional support numbers please visit www.te.com

Application and Installation (Continued)

Mating possibilities

The mating possibilities of the MTC100 and MTC50 series are depicted below by using a 1" plug shell with cadmium finish. The same mating possibilities are available for 2" shells and other shell finishes. Part numbers should be substituted as necessary.

The wafers shown in the plug and receptacle shells are for flat conductor cable. For round wire wafers, consult text.

Because of the multiple fitting possibilities of pin or socket waters, the user must ensure that the types of wafer in the plug and receptacle shells match each other.

The MTCR plug shell can only be mated with an MTCR receptacle shell; contact types must match each other.

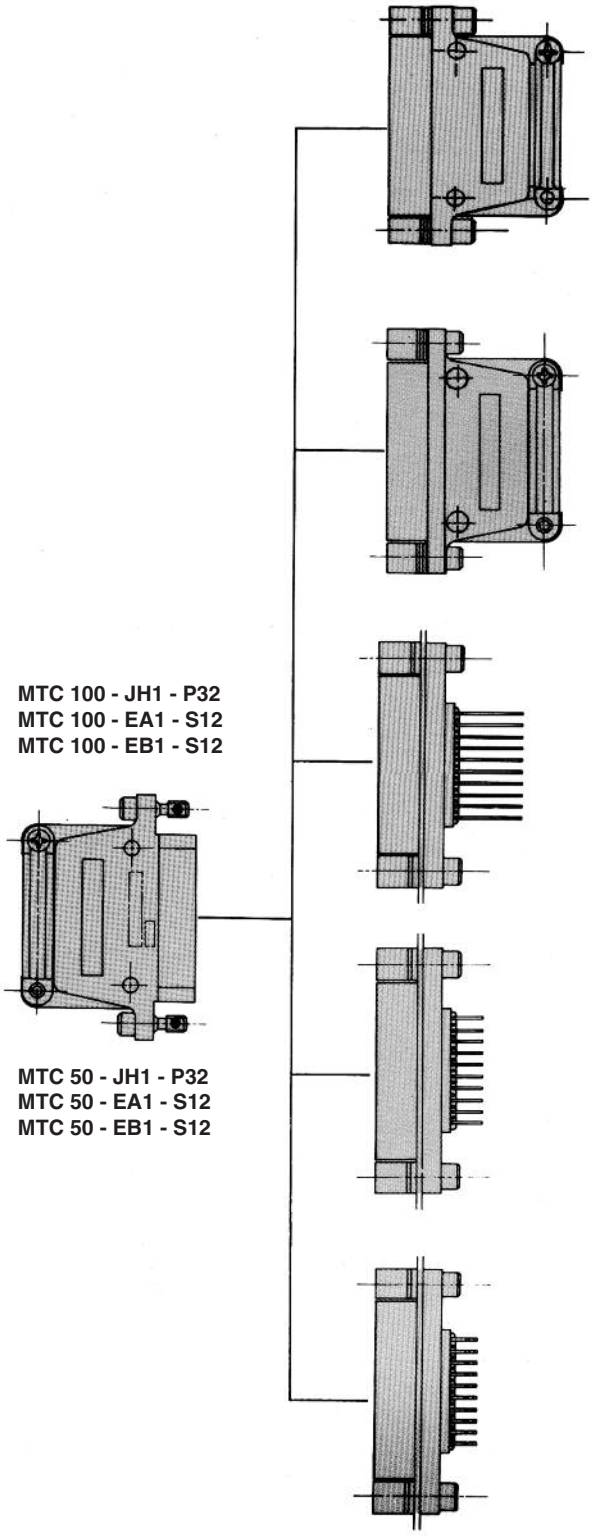

Receptacle
MTC 100 - JH1 - R32
MTC 100 - EA1 - P12
MTC 100 - EB1 - P12

MTC 50 - JH1 - R32
MTC 50 - EA1 - P12
MTC 50 - EB1 - P12

Flanged Receptacle
MTC 100 - JH1 - F32
MTC 100 - EA1 - P12
MTC 100 - EB1 - P12

MTC 50 - JH1 - F32
MTC 50 - EA1 - P12
MTC 50 - EB1 - P12

Boxmount connectors with wire wrap tails
Flanged MTC 100 - BF1 - P31
Flangeless MTC 100 - BJ1 - P31
Flanged MTC 50 - BF1 - P31

Boxmount solder tails
Flanged MTC 100 - BF1 - P32
Flangeless MTC 100 - BJ1 - P32
Flanged MTC 50 - BF1 - P32

Boxmount 90˚ angled solder tails
Flanged MTC 100 - BF1 - P33
Flangeless MTC 100 - BJ1 - P33

Dimensions are shown for reference purposes only. Specifications subject to change.

Dimensions are in millimeters unless otherwise specified.

USA: +1 800 522 6752
Asia Pacific: +86 0 400 820 6015
UK: +44 800 267 666

For additional support numbers please visit www.te.com

Application and Installation (Continued)

Installation dimensions for receptacle shells and box-mount connectors

The installation dimensions for the MTC100 and MTC50 series are the same.

All receptacle and box-mount shells are suitable for rear panel mounting. Differences in panel thickness between 0.8mm min. and 2.4mm max. are to be adjusted with the 0.8mm thick spacer washers supplied.

Boxmounts with straight wire wrap or solder tails may also be front panel mounted. Front panel and PCB mounting kits are available (consult TE Connectivity).

All receptacle shells are suitable for flat or stack mounting. It is not necessary to dismantle the stack to remove the mating plug shells.

The MTCR connector has a different cable clamp and is therefore longer than a standard receptacle shell.

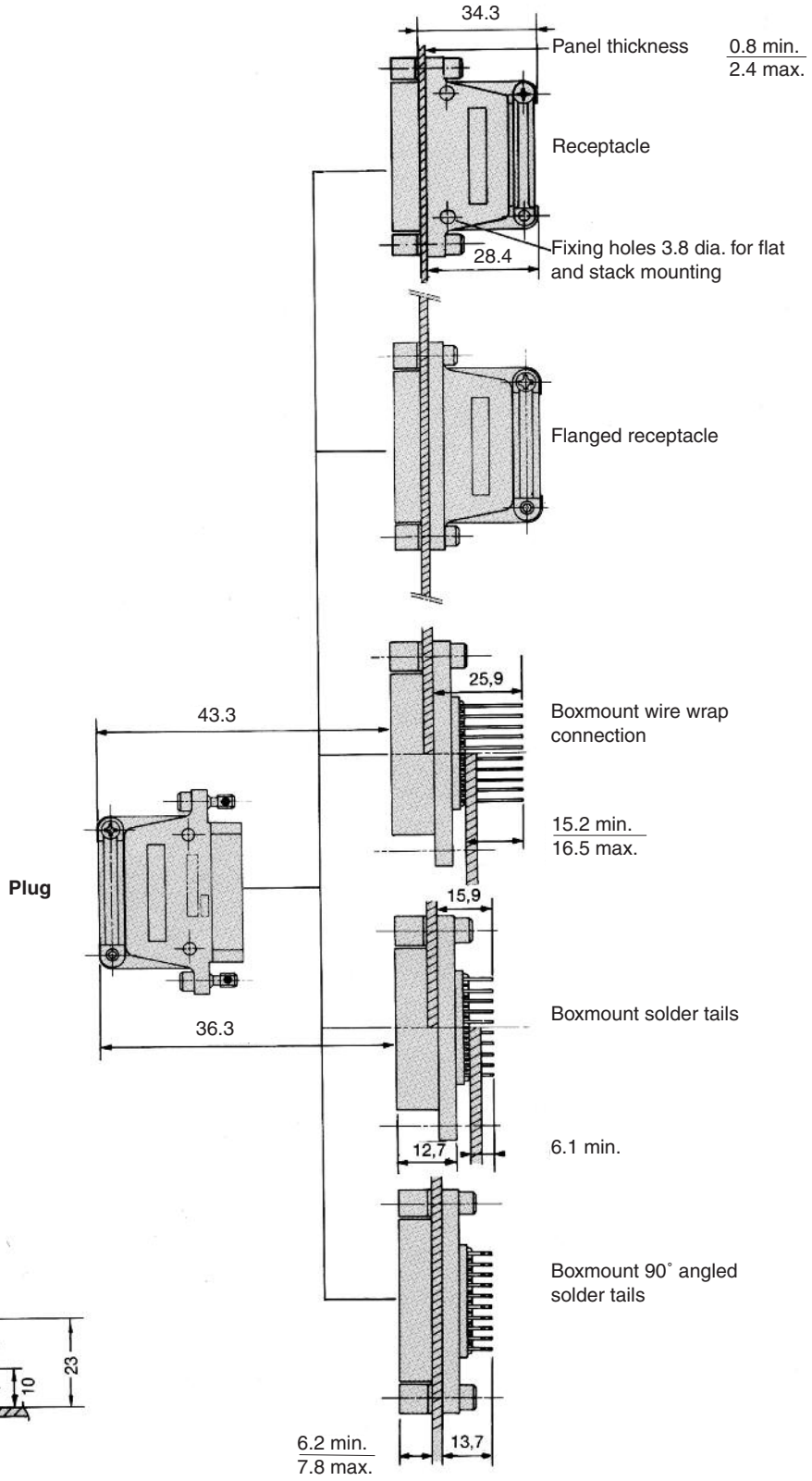

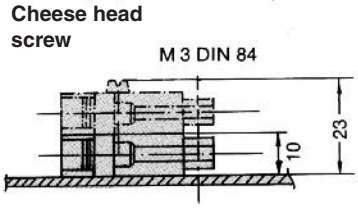

Catalog 1308940
Revised 9-14

www.te.com

Dimensions are shown for reference purposes only. Specifications subject to change.

Dimensions are in millimeters unless otherwise specified.

USA: +1 800 522 6752
Asia Pacific: +86 0 400 820 6015
UK: +44 800 267 666

For additional support numbers please visit www.te.com

Introduction

Product Facts

- **Modular versatility with Multimate contact capabilities permit multiple combinations of power, signal, coaxial and fiber optic circuits in one basic connector configuration**
- **Choice of shell sizes for housing one, two or three contact modules**
- **Modules available accommodating various circuit arrangements**
- **Polarized shells, with and without floating bushings**
- **Machine-applied terminations provide high production rates at low applied cost**
- **Recognized under the Component Program of Underwriters Laboratories Inc., File No. E28476**
- **Certified by Canadian Standards Association, File No. LR 7189**

AMP G Series connectors provide a practical means of mixing various types of electrical circuits in one basic connector configuration. They offer modular versatility as well as Multimate contact capabilities which permit use of multiple combinations of power, signal, coaxial and fiber optic circuits in the same connectors.

The "G" Series connector line provides a choice of shell sizes for housing either one, two, or three contact modules. The modules, in turn, are available in a variety of circuit densities to accommodate Type XII power contacts; Size 12 Type I and miniature COAXICON contacts (interchangeable in the same contact cavity); and Size 16 Type II, III+, VI, X, subminiature COAXICON contacts.

Each shell includes a retainer plate for easy drop-in assembly of the contact modules. Both shell and retainer are made of cast aluminum. Shells also are available with and without floating bushings and are polarized with keyways in the receptacles and matching keys in the plugs. The modules are made of either diallyl phthalate or general purpose phenolic.

Complementing the "G" Series modular connectors are latching hardware, cable clamps and strain relief which ensure the integrity of all mated connections.

Technical Documents

The following is a list of technical documents covering the application, performance and maintenance of "G" Series Connectors.

Product Specifications describe technical performance characteristics and verification tests. They are intended for the Design, Component and Quality Engineer.

108-10002 — AMP G Series Connectors

108-10037 — Type XII Contacts

Instruction Sheets provide instructions for assembling or applying the product. They are intended for the Manufacturing Assembler or Operator.

Product —

Connectors, Contacts and Accessories — 408-7171, 408-7184, 408-7189, 408-7190, 408-7230

Locking Latch — 408-7268

Locking Spring — 408-7187

Cable Clamps — 408-7185

Strain Relief — 408-7186, 408-7263

Tooling —

Crimping Dies:

- Type I Contacts 1 — 408-7225
- Type II Contacts — 408-7420, 408-7453
- Type XII Contacts — 408-7175
- Miniature COAXICON Contacts — 408-1770

Hand Crimping:

- Type I Contacts — 408-7192
- Type II Contacts — 408-6810, 408-1786, 408-7267
- Type III+ Contacts — 408-7414, 408-9819
- Type VI Contacts — 408-9819, 408-7680, 408-7716
- Type XII Contacts — 408-2095

Catalog 1308940
Revised 9-14

www.te.com

Dimensions are shown for reference purposes only. Specifications subject to change.

Dimensions are in millimeters unless otherwise specified.

USA: +1 800 522 6752
Asia Pacific: +86 0 400 820 6015
UK: +44 800 267 666

For additional support numbers please visit www.te.com

Introduction (Continued)

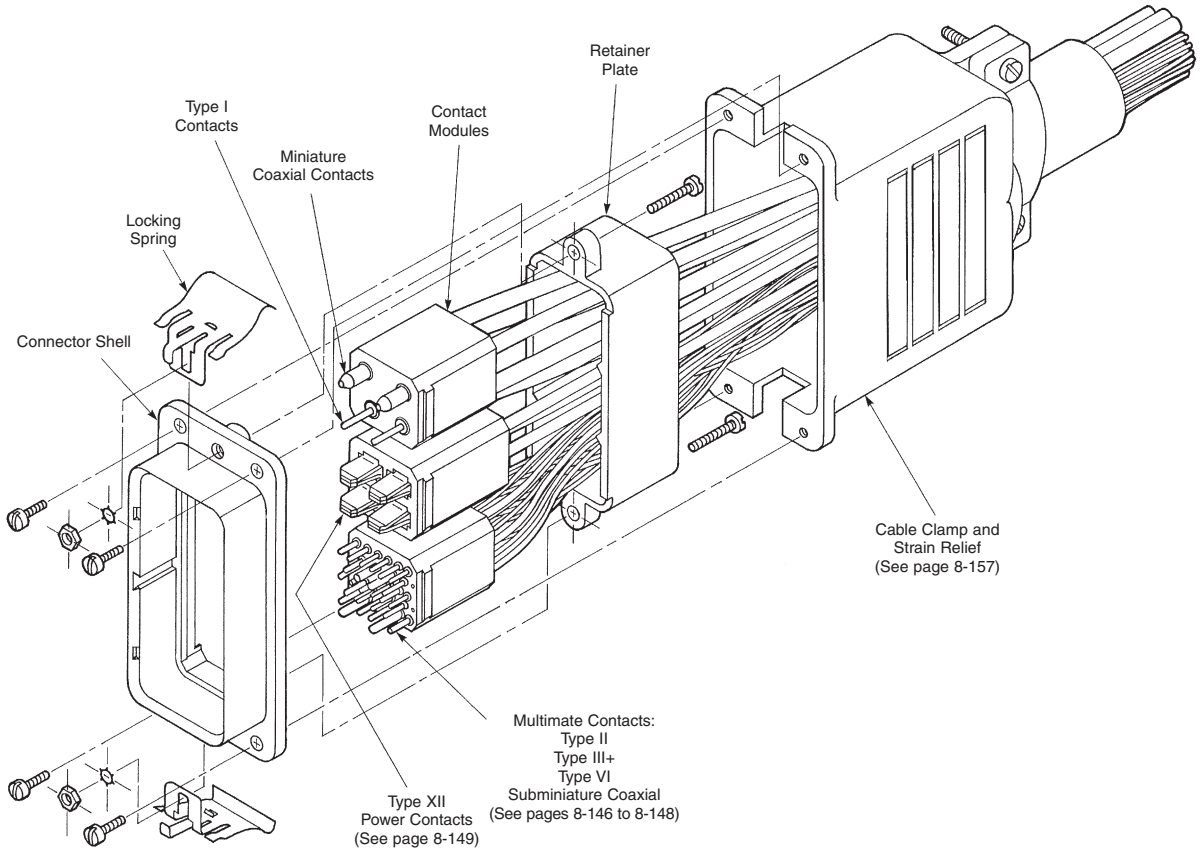

Contact Current Carrying Capability

The total current capacity of each contact is dependent upon the heat rise resulting from the combination of electrical loads on all the contacts in the connector arrangement and the maximum ambient temperature in which the connector will be operating. Caution must be taken to assure that these combinations of conditions do not cause the internal temperature of the connector to exceed the maximum operating temperature of the housing material. There are several variables which must be considered when determining the maximum current capability of your application.

These variables are:

a) Wire Size — Larger wire will carry more current since it has less internal resistance to current flow and generates less heat. The wire also conducts heat away from the connector.

b) Connector Size — In general, the more circuits in a connector, the less current per contact can be carried.

c) Ambient Temperature — The higher the ambient temperature, the less current can be carried.

Module Specifications

Contact Modules

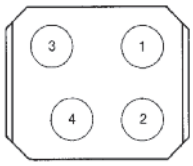

4 Position (Type I and/or Miniature COAXICON Contacts)

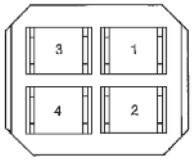

4 Position (Type XII Power Contacts)

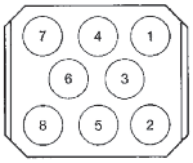

8 Position (Type I and/or Miniature COAXICON Contacts)

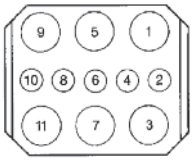

11 Position (Type I and/or Miniature COAXICON Contacts and Multimate Contacts)

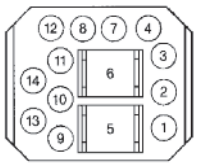

14 Position (Type XII and Multimate Contacts)

23 Position (Multimate Contacts)

Note: Mating face of Pin Module shown. Socket Module is mirror image.

No. of Positions	Module Will Accommodate These Contact Variations†	Part Numbers			
		Phenolic		Diallyl Phthalate	
		Pin Module	Socket Module	Pin Module	Socket Module
4	4 Type XII Contacts	202624-2	202625-2	—	—
4	4 Miniature COAXICON Contacts or Type I (Size 12) Contacts	—	—	213092-2	213093-2
8	8 Any combination of Miniature COAXICON Contacts and Type I (Size 12) Contacts	—	—	213090-4* 213090-2	213091-4* 213091-2
11	6 Miniature COAXICON Contacts or Type I (Size 12) Contacts and 5 Type II (Size 16), Type III+ (Size 16), Type VI (Size 16) or Subminiature COAXICON Contacts	202648-4	202649-4	202648-2	202649-2
14	2 Type XII Contacts and 12 Type II (Size 16), Type III+ (Size 16), Type VI (Size 16), or Subminiature COAXICON Contacts	202759-2	202760-2	202759-4	202760-4
23	23 Type II (Size 16), Type III+ (Size 16), Type VI (Size 16) or Subminiature COAXICON Contacts	202650-4	202651-4	202650-2	202651-2

* Type I contacts cannot be used in cavities 1, 2, 7 and 8.
† Order contacts separately, see below and pages 8-148 to 8-151.

Multimate Contacts

Type I Contacts

Contact Size — 12
Pin Diameter — .094 [2.39]
Test Current — 23 amperes*

Materials

Contact Body — Copper alloy
Spring — Stainless steel
Finish — .000030 [0.00076] gold over .000030 [0.00076] nickel

***Note:** Current carrying capability depends on wire size, connector size and ambient temperature.

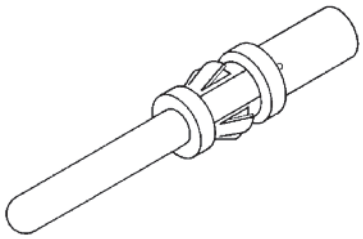

Pin

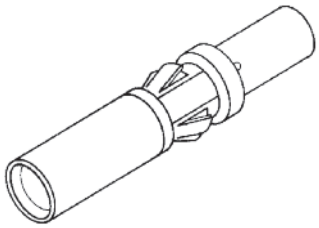

Socket

Wire Size Range		Wire Strip Length	Ins. Dia. Range	Loose Piece Contact Part No.		Tooling Part Number	
						Contact	
AWG	[mm²]			Pin	Socket	Hand Tool	Dies for Pneumatic Tool 69365
18-16	0.8-1.4	**.234** 5.95	No Ins. Support	202421-1	202418-1	90121	90122
14-12	2-3	**.234** 5.95	No Ins. Support	202422-1	202417-1		

Extraction Tool Part Number 305183-8.

Dimensions are shown for reference purposes only. Specifications subject to change.

Dimensions are in millimeters unless otherwise specified.

USA: +1 800 522 6752
Asia Pacific: +86 0 400 820 6015
UK: +44 800 267 666

For additional support numbers please visit www.te.com

Signal Contacts

Type II, Screw Machined, Crimp

Material

Contact Body — Brass

Retention Spring — Stainless steel

Finish

Contact Body — 000030 [0.00076] gold over .000050 [0.00127] nickel. Gold thickness controlled on socket O.D.

Retention Spring — Stainless steel

Pin

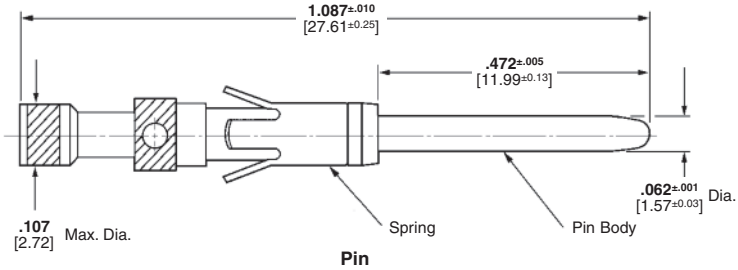

Pin

Socket

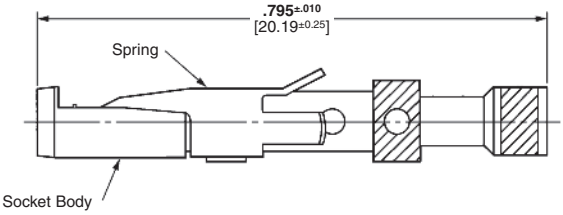

Socket

Contact Size 16—Pin Diameter .062 [1.57] (Test Current, 13 Ampere)‡

Wire Size Range AWG	Wire Size Range mm²	Ins. Dia. Range[1]	Tape Mounted Contact No.[2] Pin	Tape Mounted Contact No.[2] Socket	Loose Piece Contact No. Pin	Loose Piece Contact No. Socket	Contact Color Code	Tooling Part No. Tape Mounted: Dies for AMP-TAPETRONIC Machine 69875	Tooling Part No. Loose Piece: Die Set for 626 Pneumatic Tool System	Tooling Part No. Loose Piece: Hand Tool
28-24	0.08-0.20	**.035-.055** 0.89-1.40	201611-4	—	201611-1[4]	201613-1[5]	Red/Red	90249-2	90230-1[7]	91538-1 or 601967-1
		.048-.065 1.22-1.65	—	—	201334-1[4]	201332-1[5]	Red/Red			
		.095-.110 2.41-2.79	—	—	202410-1[4]	202411-1[5]	Green		—	601967-1
24-20	0.2-0.6	**.040-.062** 1.02-1.57	201578-4	—	201578-1[4]	201580-1[5]	Yellow/Red	90249-2	90230-1[7]	91538-1 or 58541-1*
		.055-.088 1.40-2.16	201330-6	201328-9	201330-1[4]	201328-1[5]	Yellow/Red			601967-1
18 (Two)	0.9-0.9 (Two)	No. Ins. Support	—	—	202725-1[4]	202726-1[4]	Blue	—	90231-2[7]	91539-1 or 601967-1
18-16	0.8-1.4	**.080-.105** 2.03-2.67	—	—	202507-1[4]	202508-1[5]	—	—	—	90136-1 or 601967-1
		No Ins. Support	200336-6	200333-8	200336-1[4]	200333-1[4]	Blue/Blue	90250-1	90231-2[7]	91539-1 58541-1* or 601967-1
			—	—	204219-1[5,6]	—	Blue/Blue	—	—	
14	2	No Ins. Support	212618-2[3]	201568-3	201570-1[4]	201568-1[5]	Violet/Blue	90250-1	90231-2[7]	91539-1 58541-1* or 601967-1
			—	—	212618-1[3,6,†]	—	—	—	—	

[1] Overall insulation crimp diameter, including crimp barrel, must not exceed .125 [3.18].
[2] For AMP-TAPETRONIC Machine Part Number 69875, order contacts by Tape Mounted Contact No., plus packaging code "IM REEL" (5000 parts per reel).
[3] Grounding pin is used to provide a make-first/break-last condition when mating and unmating connector halves.
[4] Use turret TH502 (1-601967-6) with hand tool 601967-1.
[5] Use turret TH501 (1-601967-5) with hand tool 601967-1.
[6] Pin length is .630 ± .005 [16.002 ± .127] on these two pins.
[7] Die Set requires "C" Head Adapter Part Number 318161-1; Adapter Holder Part Number 356304-1 (with ratchet) or 189928-1 (without); and Power Unit Part Number 189721-2 (hand actuated) or 189722-2 (foot actuated).
* Commercial PRO-CRIMPER II Hand Tool for field repair use only. Note: Die Set can be adapted for use with the 626 Pneumatic Tool System.
† Does not use Hand Tool 91539-1 or 601967-1.
‡ Single contact, free-air test current is not to be construed as contact rating current.
Insertion Tool Part Number 200893-2 (for insulation diameters .070 [1.78] or less).
Extraction Tool Part Number 305183.

Dimensions are shown for reference purposes only. Specifications subject to change.

Dimensions are in millimeters unless otherwise specified.

USA: +1 800 522 6752
Asia Pacific: +86 0 400 820 6015
UK: +44 800 267 666

For additional support numbers please visit www.te.com

Signal Contacts (Continued)

Type III+ Precision Formed, Crimp

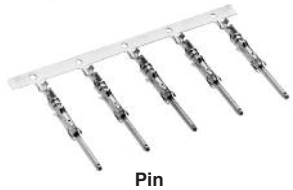

Pin

Socket

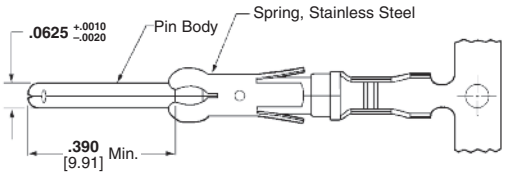

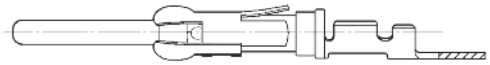

Pin

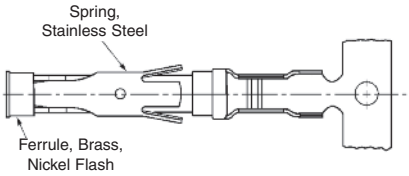

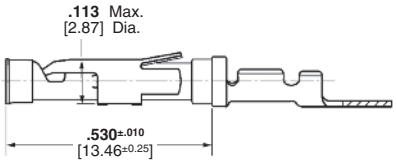

Socket

Material and Finish

Contact Body — Brass
Retention Spring — Stainless steel

Contact Size 16—Pin Diameter .062 [1.57] (Test Current, 13 Ampere)‡

Wire Size Range AWG	Wire Size Range mm²	Ins. Dia. Range	Contact Finish	Strip Form Contact No. Pin	Strip Form Contact No. Socket	Loose Piece Contact No. Pin	Loose Piece Contact No. Socket	Tooling Part No. Loose Piece Hand Tool	Tooling Part No. Strip Form Applicators
30-26	0.05-0.15	.040-.060[1] 1.02-1.52	Bright Tin-Lead	66425-6	66424-6	—	—	91515-1[5]	466598-□**
			Gold/Nickel[2]	66425-7	66424-7	66429-3	66428-3		
			Sel. Gold/Nickel[3]	66425-8	66424-8	66429-4	66428-4		
		.014-.030[1] 0.36-0.76	Gold/Nickel[2]	66393-7	66394-7	—	—	90225-2[5]	466585-3**
			Sel. Gold/Nickel[3]	66393-8	66394-8	66406-4	66405-4		
26-24	0.12-0.2	.035-.055[1] 0.89-1.40	Bright Tin-Lead	66106-6	66108-6	66107-2	66109-2	91515-1[5] or 58495-1*	466321-□** or 466908-2**
			Gold/Nickel[2]	66106-7	66108-7	66107-3	66109-3		
			Sel. Gold/Nickel[3]	66106-8	66108-8	66107-4	66109-4		
24-20	0.2-0.6	.040-.080[1] 1.02-2.03	Bright Tin-Lead	66102-7	66104-7	66103-2	66105-2	91515-1[5] or 58495-1*	466323-□** or 466907-2**
			Gold/Nickel[2]	66102-8	66104-8	66103-3	66105-3		
			Sel. Gold/Nickel[3]	66102-9	66104-9	66103-4	66105-4		
		.060-.120[4] 1.52-3.05	Bright Tin-Lead	66564-6	66563-6	66566-2	66565-2	91542-1[5]	466383-4** or 466979-1** or 567363-□**
			Sel. Gold/Nickel[3]	66564-8	66563-8	66566-4	66565-4		
		.080-.100[1] 2.03-2.54	Bright Tin-Lead	66332-5	66331-5	66400-1	66399-1	91523-1[5] or 90225-2[5]	466324-□** or 466942-1**
			Gold/Nickel[2]	66332-7	66331-7	66400-3	66399-3		
			Sel. Gold/Nickel[3]	66332-8	66331-8	66400-4	66399-4		
18-16	0.8-1.4	.080-.100[1] 2.03-2.54	Bright Tin-Lead	66098-7	66100-7	66099-2	66101-2	91505-1[5] or 91523-1[5] or 58495-1*	466325-□** or 466906-1**
			Gold/Nickel[2]	66098-8	66100-8	66099-3	66101-3		
			Sel. Gold/Nickel[3]	66098-9	66100-9	66099-4	66101-4		
18-14	0.8-2.0	.080-.100[1] 2.03-2.54	Bright Tin-Lead	66359-6	66358-6	66361-2	66360-2	91519-1[5]	466326-□** or 466923-2**
			Gold/Nickel[2]	66359-9	66358-9	66361-3	66360-3		
			Sel. Gold/Nickel[3]	1-66359-0	1-66358-0	66361-4	66360-4		
		.110-.150[4] 2.79-3.81	Bright Tin-Lead	66597-1	66598-1	66602-1	66601-1	91521-1[5]	466958-1** or 567364-□**
			Gold/Nickel[2]	—	—	—	—		
			Sel. Gold/Nickel[3]	66597-2	66598-2	66602-2	66601-2		

[1] Overall insulation crimp diameter, including crimp barrel, must not exceed .125 [3.18].
[2] .000015 [0.00038] gold in the mating area over .000030 [0.00076] min. nickel.
[3] .000030 [0.00076] gold in the mating area over .000030 [0.00076] min. nickel.
[4] Contacts can only be used in Metrimate, Series 1 (Arr. 23-24), Series 4 (Arr. 23-13M, 23-16M, 23-22M), and VDE connectors.
[5] To use with the 626 Pneumatic Tool System: remove the crimping head from the Straight Action Hand Tool (SAHT) Assembly, order SAHT Adapter (Contact Technical Support for Part Number), Adapter Holder Part Number 356304-1 (with ratchet) or 189928-1 (without), and Power Unit Part Number 189721-1 (hand actuated) or 189722-1 (foot actuated).
* Commercial PRO-CRIMPER II hand tool for field repair only. Note: Die Set can be adapted for use with the 626 Pneumatic Tool System.
** Contact Technical Support for Automatic Machine Applicator Part Numbers.
‡ Single contact, free-air test current is not to be construed as contact rating current. Use only for testing.
Insertion Tool Part Number 91002-1 (for insulation diameters .070 [1.78] or less), Number 200893-2 (for insulation diameters .090 [2.29] max.).
Extraction Tool Part Number 305183.

Dimensions are shown for reference purposes only. Specifications subject to change.
Dimensions are in millimeters unless otherwise specified.
USA: +1 800 522 6752
Asia Pacific: +86 0 400 820 6015
UK: +44 800 267 666
For additional support numbers please visit www.te.com

Multimate Contacts

Type VI Contacts

Contact Size — 16
Pin Diameter — .062 [1.57]
Test Current — 13 amperes*
Material — Copper alloy

Contact Finish

A — Tin
B — Gold flash over .000050 [0.00127] nickel on entire contact with .000030 [0.00076] selective gold plating on contact area

***Note:** Current carrying capability depends on wire size, connector size and ambient temperature.

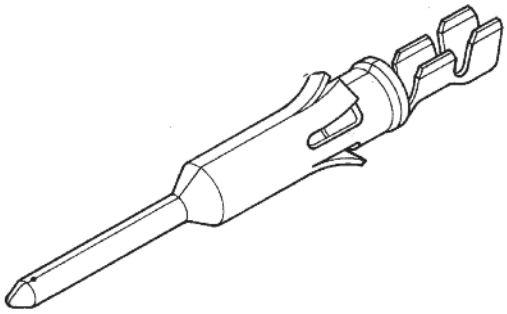

Pin

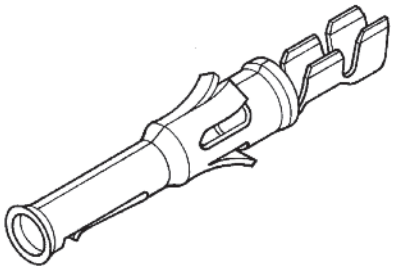

Socket

Wire Size Range[1]		Ins. Dia. Range	Contact Finish	Contact Part Number (reeled for Standard Applicator)		Contact Part Numbers (reeled for Quick-Change Applicator)		Loose Piece Contact Part No.		Tooling Part Numbers
AWG	[mm²]			Pin	Socket	Pin	Socket	Pin	Socket	Hand Tool
28-26	0.08-0.15	**.035-.055** 0.89-1.4	A	66585-1	—	66585-2	—	—	—	91515-1 58495-1[3]
			B	—	—	66585-4	66586-4	66595-2	66596-2	
24-20	0.2-0.6	**.040-.080** 1.02-2.03	A	66583-1	66584-1	66583-2	66584-2	66593-1	66594-1	91515-1 58495-1[3]
			B	—	—	66583-4	66584-4	66593-2	66594-2	
22-18	0.3-0.9	**.055-.110** 1.40-2.79	A	66581-1	66582-1	66581-2	66582-2	66591-1	66592-1	90327-1
			B	—	—	66581-4	66582-4	66591-2	66592-2	
18-16	0.8-1.4	**.080-.100** 2.03-2.54	A	66579-1	66580-1	66579-2	66580-2	66589-1	66590-1	91515-1 58495-1[3]
			B	—	—	66579-4	66580-4	66589-2	66590-2	
14	2	**.080-.135[2]** 2.03-3.43	A	66577-1	66578-1	66577-2	66578-2	66587-1	—	91550-1
			B	—	—	66577-4	66578-4	66587-2	66588-2	

[1] Wire strip length—.156 [.396] (all wire sizes).
[2] Maximum insulation diameter recommended for "G" Series connectors with Multimate contact cavities is .110 [2.79].
[3] Economy Hand Tool for field repair only.
Insertion Tool Part Number 91002-1 for insulation diameters .070 [1.78] or less.
Extraction Tool Part Number 305183.

Applicator Nos. for Terminating Machines

Wire Size Range		Model K	Model T	Model G	Model Stripper/Crimper
AWG	mm²				
28-26	0.08-0.15	466321-4	466321-3	466321-6	466908-2
24-20	0.2-0.6	466323-4	466323-3	—	466907-2
22-18	0.3-0.9	466384-4	466384-3	—	466914-1
18-16	0.8-1.4	466325-2	466325-1	466325-5	—
14	2	687997-2[4] 687997-4[4]	—	—	—

[4] Insulation Dia. Range—Part Number 687997-2, .080-.105 [2.03-2.67]; Part Number 687997-4, .105-.135 [2.67-3.43].

Dimensions are shown for reference purposes only. Specifications subject to change.

Dimensions are in millimeters unless otherwise specified.

USA: +1 800 522 6752
Asia Pacific: +86 0 400 820 6015
UK: +44 800 267 666

For additional support numbers please visit www.te.com

Multimate Contacts (Continued)

Type XII Power Contacts

Continuous Operating Current

Silver or Gold — 25 amperes max.
Tin-lead — 15 amperes max.
Material — Copper

Contact Finish

A — Tin-Lead
B — .000030 [0.00076] selective gold over .000030 [0.00076] nickel
C — .000100 [0.00254] silver plated contacts with lubricant added
D — Tin

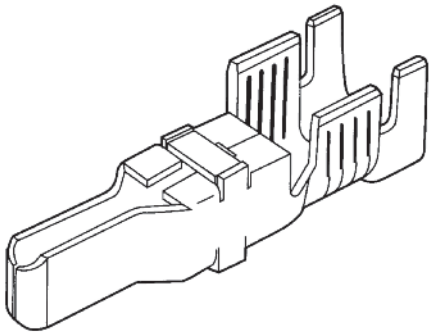

Male

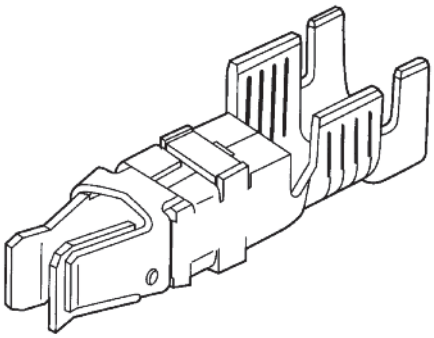

Female

Wire Size Range[1] AWG	Wire Size Range[1] [mm²]	Ins. Dia. Range	Contact Finish	Strip Form Contact Part Number for Standard Applicator Male	Strip Form Contact Part Number for Standard Applicator Female	Strip Form Contact Part Number for Quick-Change Applicator* Male	Strip Form Contact Part Number for Quick-Change Applicator* Female	Loose Piece Contact Part No. Male	Loose Piece Contact Part No. Female	Die Insert Number for Hand Tool 69710-1 or 626 Pneumatic Tool System**
16 and 14-12	1.25-1.4 and 2-3	**.135-.160** 3.43-4.06	A	66255-1	66740-7	66255-5	1-66740-2	66261-1	66740-8	90145-2[3] and 90145-1[4]
				66256-1[2]	—	66256-5[2]	—	66262-1[2]	—	
			B	66255-2	66740-5	66255-6	1-66740-1	66261-2	66740-6	
				66256-2[2]	—	66256-4[2]	—	66262-2[2]	—	
			C	66255-7	66740-1	66255-8	66740-9	66261-4	66740-2	
				66256-6[2]	—	66256-7[2]	—	66262-4[2]	—	
			D	1-66255-1	1-66740-9	1-66255-2	2-66740-0	66261-5	2-66740-1	
				66256-8[2]	—	66256-9[2]	—	66262-5[2]	—	
10	5-6	**.190-.220** 4.83-5.59	A	66253-1	66741-7	66253-5	1-66741-2	66259-1	66741-8	90140-1
				66254-1[2]	—	—	—	66260-1[2]	—	
			B	66253-2	66741-5	66253-6	1-66741-1	66259-2	66741-6	
				66254-2[2]	—	—	—	66260-2[2]	—	
			C	66253-4	66741-1	66253-8	66741-9	66259-4	66741-2	
				66254-4[2]	—	—	—	66260-4[2]	—	
			D	66253-4	66741-1	66253-8	66741-9	66259-5	66741-1	
				66254-4[2]	—	—	—	66260-5[2]	—	

[1] Wire strip length—.281 [7.14]
[2] Grounding Contact
[3] Die Insert Part Number 90145-2 is for crimping 16 AWG [1.25-1.4 mm²] wire
[4] Die Insert Part Number 90145-1 is for crimping 14-12 AWG [2-3 mm²] wire
Extraction Tool Part Number 91019-3
* Quick-Change Applicators for—16-14-12 AWG: Model K–Part Number 567455-2, Model T–Part Number 567455-1, Model G–Part Number 567455-3
10 AWG: Model K—Part Number 567021-2, Model T—Part Number 567021-1, Model G—Part Number 567021-4
** Use 626 adapter 318161-1

Dimensions are shown for reference purposes only. Specifications subject to change.

Dimensions are in millimeters unless otherwise specified.

USA: +1 800 522 6752
Asia Pacific: +86 0 400 820 6015
UK: +44 800 267 666

For additional support numbers please visit www.te.com

Multimate Contacts (Continued)

Miniature COAXICON Contacts

Material

Outer Shell — Brass per MIL-C-50

Center Conductor — Beryllium copper

Inner Dielectric — Polypropylene

Retention Spring — Passivated stainless steel

Ferrule — Copper

Finish

Outer Shell, Center Conductor — .000030 [0.00076] gold over .000030 [0.00076] nickel

Retention Spring — Nickel per QQ-N-290

Ferrule — Bright tin-lead per MIL-T-10727

Contacts

A — .000030 [0.00076] gold

B — .000100 [0.00254] gold

Test Method for Electronic and Electrical Component Parts: MIL-STD-202

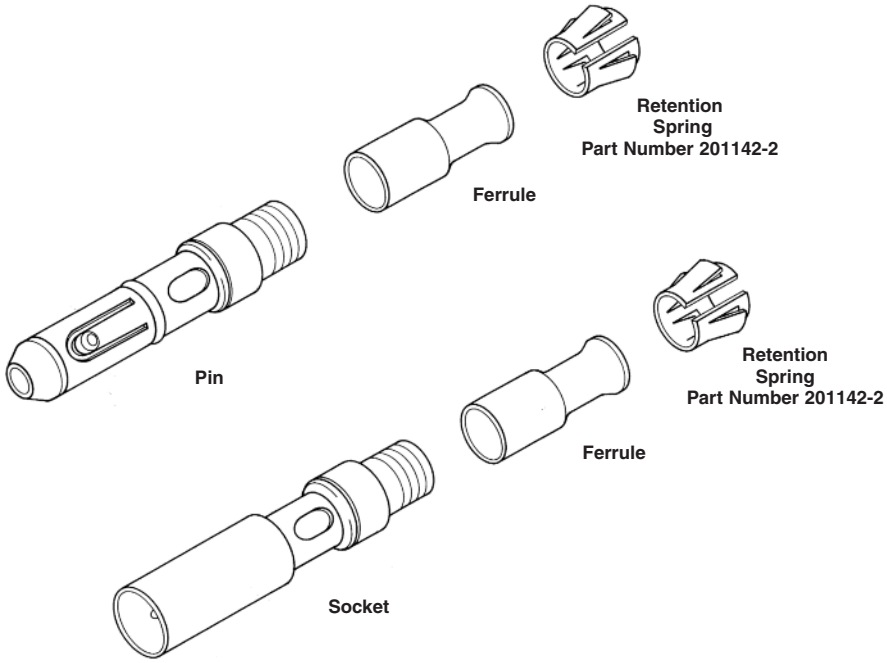

Selection Chart for Coaxial Cable

Cable Size (RG/U)	Contact Finish	Loose Piece Contact Part Number		Ferrule Part Number	Tooling Part Number		Tool Handle, Die Insert and Plastic Collar Color Code**
		Pin	Socket		Die Insert for Hand Tool 69710 or 626 Pneumatic Tool System[2]	Hand Tool Number	
55, 55A, 55B, 141, 142, 223	A	201145-4	201146-4	330478	69315-4	69248-4	Blue & Orange
	B	—	201146-9				
58, 58A, 58B, 58C	A	201145-4	201146-4	—	69220-2	—	Blue
	B	—	201146-9				
59, 59A, 59B, 62, 62A, 62B 124, 140, 210 (4-Position Only)	A	201097-1	201098-1	329006	69675-1	91912-4[1]	Yellow
179, 179A, 187, 21-598	A	201143-1	201144-1	328666	69227-2	91912-3[1]	White
	B	—	201144-6				
180, 180A, 195, 21-597	A	201145-2	201146-2	328664	69222-2	—	Red
	B	1-201145-0	1-201146-0				
178, 178A, 196	A	201511-1	—	328667	69373	69186-2	Brown
174, 188, 316	A	201143-5	201144-5	328666	69227-2	91912-3[1]	White
	B	201143-7	201144-7				
122	A	201145-1	201146-4	328664	69222-2	45639-2	Red

* Includes bench mount and foot control.
** Match Plastic Collar and Tool colors for application to cable, Inner Insulator color identifies Wire Barrel of Center Contact
Note: A ferrule and retention spring (Part Number 201142-2) are required for each pin and socket.
Extraction Tool Part Number 305183-8
[1] SDE die used with tool frame 354940-1
[2] Use 626 adapter 318161-1

Catalog 1308940
Revised 9-14

www.te.com

Dimensions are shown for reference purposes only. Specifications subject to change.

Dimensions are in millimeters unless otherwise specified.

USA: +1 800 522 6752
Asia Pacific: +86 0 400 820 6015
UK: +44 800 267 666

For additional support numbers please visit www.te.com

Multimate Contacts (Continued)

Selection Chart for Twisted Pair Leads

Wire Size Range AWG	Wire Size Range [mm²]	Max. Ins. Dia. (Two Wires Combined)	Contact Finish	Loose Piece Contact Part Number Pin	Loose Piece Contact Part Number Socket	Ferrule Part Number	Tooling Part Number: Die Inserts for Hand Tool 69710-1 or 626 Pneumatic Tool System[1]	Tooling Part Number: Hand Tool	Tool Handle, Die Insert and Plastic Collar Color Code **
28-26 (Solid)	0.08-0.15	**.080** 2.03	A	201511-1	—	328667	69373	69186-2	Brown
24-22 (Stranded)	0.2-0.4	**.115** 2.92	A	201143-5	201144-5	328666	69672	91912-4[2]	Gray and White
			B	201143-7	201144-7				
24-22 (Solid or Stranded)	0.2-0.4	**.160** .406	A	50079-1	50080-1	329029	69222-2	45639-2	Red

Selection Chart for Shielded Wire

Cable Size (RG/U)	Contact Finish	Loose Piece Contact Part Number Pin	Loose Piece Contact Part Number Socket	Ferrule Part Number	Tooling Part Number: Die Inserts for Hand Tool 69710 or 626 Pneumatic Tool System[1]	Tooling Part Number: Hand Tool	Tool Handle, Die Insert and Plastic Collar Color Code **
No. 26, NAS-702, Class A & C No. 26, MIL-W-16878, Types E & EE No. 24, NAS-702, Class A & C No. 24, MIL-W-16878, Types E & EE No. 22, NAS 702, Class C No. 22, MIL-W-16878, Type E No. 22, MIL-C-7078 A, Type I No. 1 Dielectric, .068 [1.73] O.D.	A	201143-2	201144-2	328666	—	69147-2	Gray
No. 22, NAS-702, Class A No. 22, MIL-C-7078 A, Type II	A	201143-3	201144-3	328666	69227-2	91912-3[2]	White
No. 22, MIL-C-7078 A, Types I & II No. 2 Dielectric, .075 [1.91] O.D. No. 3 Dielectric, .085 [2.16] O.D.	A	201145-1	201146-4	—	69222-2	45639-2	Red
No. 22, NAS-702, Class B	A	201145-4	201146-4	328663	69220-2	45740-2	Blue
	B	—	201146-9				

Selection Chart for Various Manufacturers' Cables

Center Conductor Wire AWG/Type	Center Conductor Wire [mm²]	Dielectric O.D. (Max.)	Cable O.D. Range	Braid	Loose Piece Contact Part No. Pin	Loose Piece Contact Part No. Socket	Ferrule Part Number	Tooling Part Number: Die Inserts for Hand Tool 69710-1 or 626 Pneumatic Tool System[1]	Tooling Part Number: Hand Tool	Tool Handle, Die Insert and Plastic Collar Color Code**
Brand Rex T209A 29 AWG	0.7-0.08	**.076** 1.93	**.112-.122** 2.84-3.1	Single	—	201146-2	330587	69440	—	Orange
Brand Rex T5788A 26 AWG	0.12-0.15	**.106** 2.69	**.160** 4.06	Single	201145-2	201146-2	328664	69222-2	45639-2	Red
32-26	0.03-0.15	**.129** 3.28	**.122-.137** 3.1-3.48	Single	—	201146-2	330587	69440	—	Orange
Raychem 0030D1314										
Army Ordnance 11207177										

*Includes bench mount and foot control; requires Manual Take-Up Attachment Part Number 69689
**Match Plastic Collar and Tool colors for application to cable. Inner Insulator color identifies Wire Barrel of Center Contact.
Note: A ferrule and retention spring (Part Number 201142-2) are required for each pin and socket.
Extraction Tool Part Number 305183-8
[1] Use 626 adapter 318161-1
[2] SDE die used with tool frame 354940-1

Dimensions are shown for reference purposes only. Specifications subject to change.
Dimensions are in millimeters unless otherwise specified.
USA: +1 800 522 6752
Asia Pacific: +86 0 400 820 6015
UK: +44 800 267 666
For additional support numbers please visit www.te.com

Coaxial Contacts

Subminiature Coax, Size 16 Precision Formed, Crimp

Pin

Socket

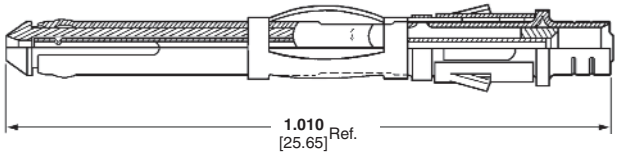

Pin

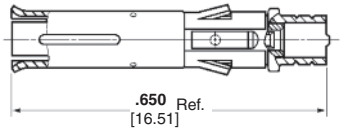

Socket

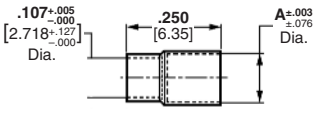

Ferrule
Part Number 225088-1— A .120 [3.05] Dia.
225088-3— A .123 [3.12] Dia.

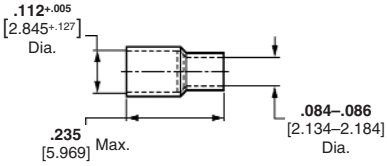

Ferrule
Part Number 1-332057-0

Material

Outer Shell — Brass per MIL-C-50
Center Conductor — Beryllium copper per QQ-C-533 (Pin); Brass per QQ-B-626 (Socket)
Inner Dielectric — Polypropylene
Retention Spring — Stainless steel per QQ-S-766
Ferrule — Copper per QQ-C-576

Finish

Outer Shell, Center Conductor— See charts
Ferrule† — Bright tin-lead per MIL-T-10727

Selection Chart for Coaxial Cable

Cable Size (RG/U)	Contact Finish	Loose Piece Contact No. Pin	Loose Piece Contact No. Socket	Ferrule Part No.	Tooling Part No. Die Sets for Hand Tool 69710-1 or 626 Pneumatic Tool System	Tooling Part No. Hand Tool
178, 196	Gold/Nickel Gold/Copper[1]	226537-2	51565-2	1-332057-0†	69690-2[3]	69656-2
	Gold/Nickel Gold/Copper[2]	—	51565-5			
196 (Double Braid)	Gold/Nickel Gold/Copper[1]	226537-2	51565-2	225088-1† or 5-225088-1[4]	—	69656-9
	Gold/Nickel Gold/Copper[2]	—	51565-5			
174, 188, 316	Gold/Nickel Gold/Copper[1]	226537-1	51565-1	1-332056-0	69690[3]	91911-3*
	Gold/Nickel Gold/Copper[2]	226537-4	51565-4			
174 (Double Braid)	Gold/Nickel Gold/Copper[1]	226537-1	51565-1	225088-3 or 5-225088-3[4]	—	69656-7
	Gold/Nickel Gold/Copper[2]	226537-4	51565-4			
179, 187	Gold/Nickel Gold/Copper[1]	226537-1	51565-1	1-332056-0	69690-1[3]	91911-4*
	Gold/Nickel Gold/Copper[2]	226537-4	51565-4			
187 (Double Braid)	Gold/Nickel Gold/Copper[1]	226537-1	51565-1	225088-1†	—	69656-8
	Gold/Nickel Gold/Copper[2]	226537-4	51565-4			
161	Gold/Nickel Gold/Copper[1]	226537-1	51565-1	1-332056-0	—	—
	Gold/Nickel Gold/Copper[2]	226537-4	51565-4			

[1] .000030 [0.00076] gold over .000050 [0.00127] nickel—outer shell and socket center conductor; .000030 [0.00076] gold over .000100 [0.00254] copper—pin center conductor.
[2] .000050 [0.00127] gold over .000050 [0.00127] nickel—outer shell and socket center conductor; .000050 [0.00127] gold over .000100 [0.00254] copper—pin center conductor.
[3] Die Set requires "C" Head Adapter Part Number 318161-1; Adapter Holder Part Number 356304-1 (with ratchet) or 189928-1 (without); and Power Unit Part Number 189721-2 (hand actuated) or 189722-2 (foot actuated).
[4] RoHS compliant Part Numbers.
† Does not use Hand Tool 45098 or 601967-1.
Extraction Tool Part Number 305183
* SDE die used with tool frame 354940-1

Catalog 1308940
Revised 9-14

www.te.com

Dimensions are shown for reference purposes only. Specifications subject to change.

Dimensions are in millimeters unless otherwise specified.

USA: +1 800 522 6752
Asia Pacific: +86 0 400 820 6015
UK: +44 800 267 666

For additional support numbers please visit www.te.com

Coaxial Contacts (Continued)

Subminiature Coax, Size 16 Precision Formed, Crimp
(Continued)

Finish

Ferrule† — Bright tin-lead per MIL-T-10727

Selection Chart for Twisted Pair and Shielded Wire

Wire Size AWG	Wire Size mm²	Contact Finish	Loose Piece Contact No. Pin	Loose Piece Contact No. Socket	Ferrule Part No.	Tooling Part No. Die Sets for Hand Tool 69710-1 or 626 Pneumatic Tool System	Tooling Part No. Hand Tool
30 (Twisted Pair, Solid)	0.05	Gold/Nickel Gold/Copper[1]	226537-3	51565-3	1-332057-0†	69690-2[3]	69656-2
		Gold/Nickel Gold/Copper[2]	226537-6	51565-6			
28 (Twisted Pair, Solid)	0.08-0.09	Gold/Nickel Gold/Copper[1]	226537-3	51565-3	1-332057-0†	69690[3]	91911-3*
		Gold/Nickel Gold/Copper[2]	226537-6	51565-6			
28 (Twisted Pair, Stranded 7 Str., .0050 [0.13] Dia.)	0.08-0.09	Gold/Nickel Gold/Copper[1]	226537-3	51565-3	1-332057-0†	69690-1[3] or 69690-2[3]	91911-4* or 69656-2
		Gold/Nickel Gold/Copper[2]	226537-6	51565-6			
26 (Twisted Pair, Solid or Stranded 7 Str., .0063 [0.16] Dia.)	0.12-0.15	Gold/Nickel Gold/Copper[1]	226537-3	51565-3	1-332057-0†	69690[3]	91911-3*
		Gold/Nickel Gold/Copper[2]	226537-6	51565-6			
26 (Shielded, .075 [1.91] Max. O.D.)	0.12-0.15	Gold/Nickel Gold/Copper[1]	226537-1	51565-1	1-332057-0†	69690-3[3]	69656-3
		Gold/Nickel Gold/Copper[2]	226537-4	51565-4			

[1] .000030 [0.00076] gold over .000050 [0.00127] nickel—outer shell and socket center conductor; .000030 [0.00076] gold over .000100 [0.00254] copper—pin center conductor.
[2] .000050 [0.00127] gold over .000050 [0.00127] nickel—outer shell and socket center conductor; .000050 [0.00127] gold over .000100 [0.00254] copper—pin center conductor.
[3] Die Set requires "C" Head Adapter Part Number 318161-1; Adapter Holder Part Number 356304-1 (with ratchet) or 189928-1 (without); and Power Unit Part Number 189721-2 (hand actuated) or 189722-2 (foot actuated).
† Does not use Hand Tool 45098 or 601967-1.
Note: A ferrule is required for each pin and socket. Extraction Tool Part Number 305183.
* SDE die used with tool frame 354940-1

Shell Specifications

One-Module Shell

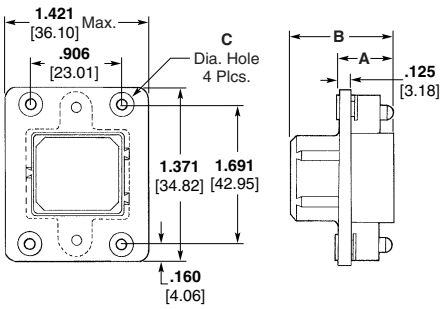

Plug

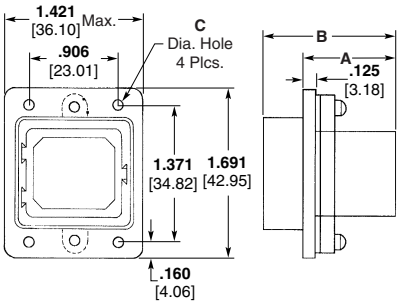

Receptacle

Material and Finish

Shell and Retainer — Die cast aluminum, electroless nickel plated (no intentional additions of lead or cadmium)

Screws and Floating Bushings — Passivated stainless steel

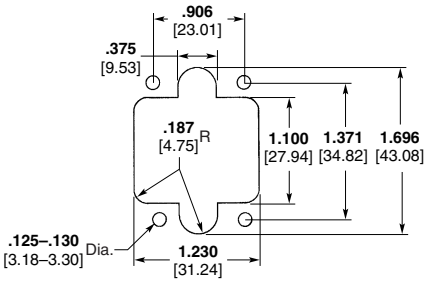

Recommended Panel Cutout

Shell Type	For Pin Module				For Socket Module			
	Dimensions			Shell Part No.	Dimensions			Shell Part No.
	A	B	C		A	B	C	
Receptacle	**1.001** 25.43	**1.509** 38.33	**.120** 3.05	5-202279-3	**.595** 15.11	**1.103** 28.02	**.120** 3.05	5-202279-4
Plug (with Floating Bushings)	**.886** 22.5	**1.416** 35.97	**.118** 3.00	5-202275-4	**.480** 12.19	**1.010** 25.65	**.118** 3.00	5-202275-3
Plug (without Floating Bushings)	**.886** 22.5	**1.416** 35.97	**.125** 3.18	5-202786-2	**.480** 12.19	**1.010** 25.65	**.125** 3.18	5-202786-1

Notes: 1. Plugs for pin modules mate with receptacles for socket modules, and plug for socket modules mate with receptacles for pin modules.
2. Pin and socket modules for these shells are presented on page 8-145.
3. For cable clamps and latching hardware, see page 8-157.

Dimensions are shown for reference purposes only. Specifications subject to change.

Dimensions are in millimeters unless otherwise specified.

USA: +1 800 522 6752
Asia Pacific: +86 0 400 820 6015
UK: +44 800 267 666

For additional support numbers please visit www.te.com

Shell Specifications (Continued)

Two-Module Shell

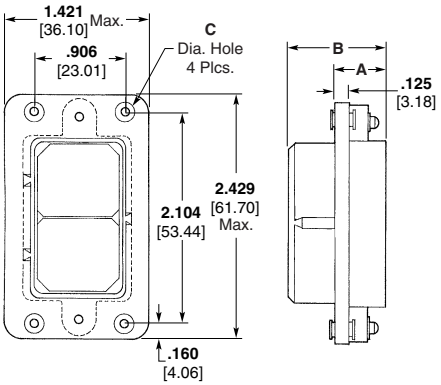

Plug

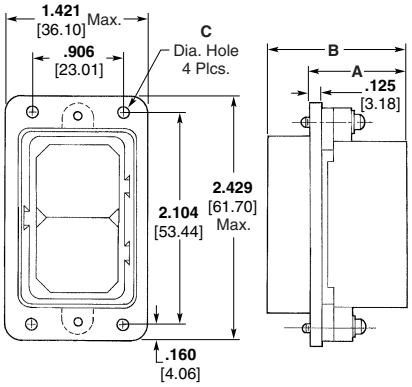

Receptacle

Material and Finish

Shell and Retainer — Die cast aluminum, electroless nickel plated (no intentional additions of lead or cadmium)

Screws and Floating Bushings — Passivated stainless steel

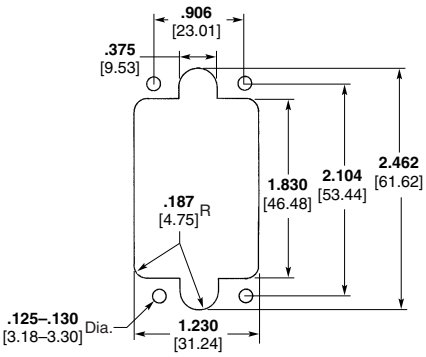

Recommended Panel Cutout

Shell Type	For Pin Module				For Socket Module			
	Dimensions			Shell Part No.	Dimensions			Shell Part No.
	A	B	C		A	B	C	
Receptacle	**1.001** 25.43	**1.509** 38.33	**.120** 3.05	5-202681-2	**.595** 15.11	**1.103** 28.02	**.120** 3.05	5-202681-3
Plug (with Floating Bushings)	**.886** 22.5	**1.416** 35.97	**.118** 3.00	5-202680-3	**.480** 12.19	**1.010** 25.65	**.118** 3.00	—
Plug (without Floating Bushings)	**.886** 22.5	**1.416** 35.97	**.125** 3.18	5-202789-2	**.480** 12.19	**1.010** 25.65	**.125** 3.18	5-202789-1

Notes: 1. Plugs for pin modules mate with receptacles for socket modules, and plug for socket modules mate with receptacles for pin modules.
2. Pin and socket modules for these shells are presented on page 8-145.
3. For cable clamps and latching hardware, see page 8-157.

Shell Specifications (Continued)

Three-Module Shell

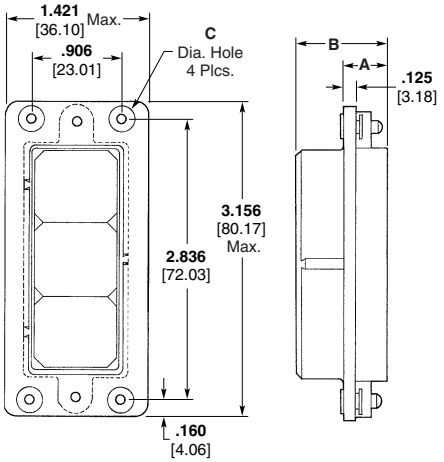

Plug

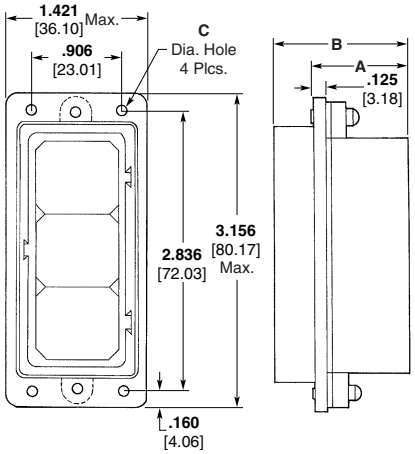

Receptacle

Material and Finish

Shell and Retainer — Die cast aluminum, electroless nickel plated (no intentional additions of lead or cadmium)

Screws and Floating Bushings — Passivated stainless steel

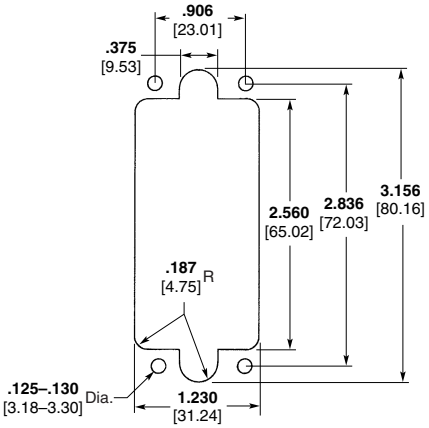

Recommended Panel Cutout

Shell Type	For Pin Module				For Socket Module			
	Dimensions			Shell Part No.	Dimensions			Shell Part No.
	A	B	C		A	B	C	
Receptacle	**1.001** 25.43	**1.509** 38.33	**.120** 3.05	5-202287-3	**.595** 15.11	**1.103** 28.02	**.120** 3.05	5-202287-4
Plug (with Floating Bushings)	**.886** 22.5	**1.416** 35.97	**.118** 3.00	5-202283-4	**.480** 12.19	**1.010** 25.65	**.118** 3.00	5-202283-3
Plug (without Floating Bushings)	**.886** 22.5	**1.416** 35.97	**.125** 3.18	5-202795-2	**.480** 12.19	**1.010** 25.65	**.125** 3.18	5-202795-1

Dimensions are shown for reference purposes only. Specifications subject to change.

Dimensions are in millimeters unless otherwise specified.

USA: +1 800 522 6752
Asia Pacific: +86 0 400 820 6015
UK: +44 800 267 666

For additional support numbers please visit www.te.com

Accessories

Cable Clamps, Straight Cable Exit

Material and Finish

Clamp and Shell — Die cast aluminum, electroless nickel plated (no intentional additions of lead or cadmium)

Fillister Head Screws — Passivated stainless steel

Cable Bushings — Rubber, black

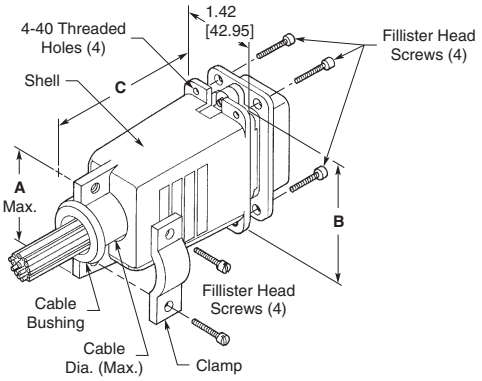

Shell Size (No. of Modules)	Dimensions A	Dimensions B	Dimensions C	Cable Dia. (Max.)	Cable Bushings	Cable RoHS Part No.
1	**1.315** 33.4	**1.416** 35.96	**2.625** 66.68	**.750** 19.05	With Without	5-202764-1* 5-202764-2
	1.100 27.94	**1.691** 42.95	**2.625** 66.68	**.563** 14.3	Without	5-202305-3
2	**1.820** 46.23	**2.424** 61.57	**3.140** 69.76	**.875** 22.23	With Without	5-202617-1* 5-202617-2
3	**2.135** 54.23	**3.156** 80.16	**3.140** 79.76	**1.156** 29.37	With Without	6-202301-1** 6-202301-0

*Two Cable Bushings are included to provide .625 [15.88] and .250 [6.35] diameter cable outlets.
**Four Cable Bushings are included to provide .938 [23.83], .750 [19.05], .625 [15.88] and .250 [6.35] diameter cable outlets.

Note: These cable clamps can be used on either a plug or receptacle shell of the appropriate size; refer to pages 8-154 to 8-156.

Strain Relief (for Three-Module Shell)

Part Number 5-202567-1

Note: This strain relief can be used on either a plug or receptacle shell, three-module size only, refer to page 8-156.

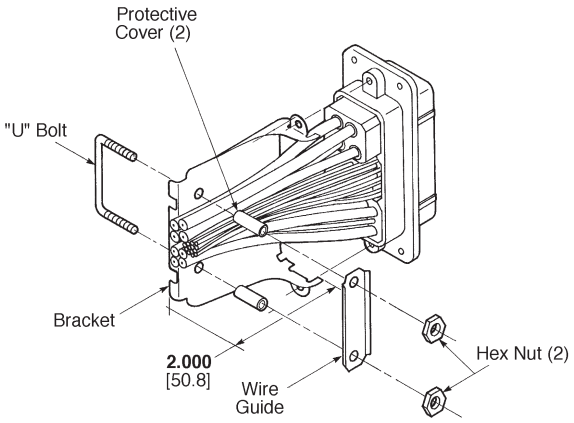

Locking Latch Assembly

Part Number 5-202832-1
(without mounting hardware)

Part Number 5-202832-2
(with mounting hardware*)

*Mounting hardware includes four lock washers, 4-40 hex nuts and fillister head screws.

Notes:
1. Locking Latch Assemblies are packaged two per unit.
2. Locking Latch Assemblies can be used on either a plug or receptacle shell. They cannot be used with shells having floating bushings.
3. Locking Latch Assemblies must be used with a cable clamp.

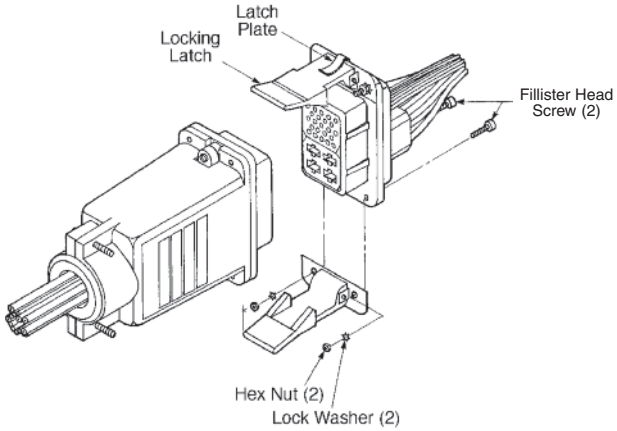

Catalog 1308940
Revised 9-14

www.te.com

Dimensions are shown for reference purposes only. Specifications subject to change.

Dimensions are in millimeters unless otherwise specified.

USA: +1 800 522 6752
Asia Pacific: +86 0 400 820 6015
UK: +44 800 267 666

For additional support numbers please visit www.te.com

Application Tooling

CERTI-CRIMP and CERTI-CRIMP II Hand Tools

These tools are ideal for small production, prototype and experimental applications. They are used for terminating pin and socket contacts to wire and feature the CERTI-CRIMP ratchet device to form accurate crimps each time.

Hand Tool Part Number 69710

CERTI-CRIMP II Straight Action Hand Tool

SDE die in PRO-CRIMPER frame. Go to www.tooling.te.com for additional tooling options for SDE dies.

626 Pneumatic Tool System

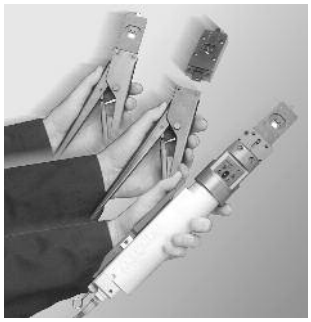

Lightweight, air-operated modular tooling system. Accepts a wide variety of interchangeable heads for crimping various types of contacts, terminals and splices onto wires ranging 6-26 AWG [13-0.12 mm^2], plus coaxial and fiber optic cable. Available with either hand- or foot-actuation switch. Optional ratchet control available to provide complete crimp cycle.

Specifications

Outside Diameter — 1.83 [46.5]

Length — 11.6-12.9 [295-327]

Grip Span — 2.19 [55.6] over button/handle

Weight — 2.3-3.3 lb [1.0-1.5 kg]

Air — 90-100 psi [6.21-6.89 bar], 11.14 in^3 [0.00018 m^3]

Cycle Time — 0.7-0.8 sec (16-14 AWG [1.3-2 mm^2] PIDG Terminals)

For more information, request Catalog 124208.

AMP-O-LECTRIC Model "K" Terminating Machine, 1-471273-3

Semiautomatic bench machine for use with standard-style applicators. It is an electrically-powered, clutched, flywheel-energy-style machine, equipped with a mechanical strip feed mechanism. Products commonly applied with this machine include AMP splices, AMPLIVAR splices, and FASTON flag receptacles.

Specifications

Width — 21 [533]

Depth — 20 [508]

Height — 24 [610] without reel

Weight — 230 lb [104 kg]

Electrical — 120 VAC, 60 Hz, 6 A

Air — 90-110 psi [6.21-7.59 bar], 6 scfm [0.00282 m^3/s] when required with air-feed applicators

Wire Range — 26-10 AWG [0.12-6 mm^2] solid or stranded, depending on product applied

For more information, contact TE Connectivity.

AMP-O-LECTRIC Model "G" Terminating Machines, 354500-1, -9, -11

Semiautomatic bench machines for crimping reeled terminals and contacts, featuring a quiet and reliable direct motor drive, microprocessor controls for ease of setup and operation, and guarding and lighting designed for operator convenience. All models are equipped with either manual or automatic precision adjustment of crimp height. Machine-mounted sensors are available for crimp quality monitoring using conventional miniature-style applicators.

Specifications

Width — 18.7-25.3 [475-643] depending on applicator type

Depth — 21.5-28.1 [546-713] depending on applicator type

Height — 20 [508]

Weight — 240 lb [110 kg]

Electrical — 120 or 220 VAC, 50 or 60 Hz; 310 VA

Air — 90-110 psi [6.21-7.59 bar], 6 scfm [0.00282 m^3/s] when required with air-feed applicators

Wire Range — 26-10 AWG [0.12-6 mm^2] solid or stranded, depending on product applied

For more information, request Catalog 65828.

Dimensions are shown for reference purposes only. Specifications subject to change.

Dimensions are in millimeters unless otherwise specified.

USA: +1 800 522 6752
Asia Pacific: +86 0 400 820 6015
UK: +44 800 267 666

For additional support numbers please visit www.te.com

Application Tooling (Continued)

Entry Level Terminator (ELT), 1338600-1, -2, -3, -4 ,-5, -6

Semiautomatic Bench Terminator for side- and end-feed reeled terminals and contacts. The ELT uses a DC motor with gear box drive. The result is a small-footprint design that is fast and quiet. Cycle time is less than 0.400 seconds with an operation sound level of 76dBa. With a crimp force capacity of 3,000 pounds, the ELT is available for all but the highest crimp force applications. A wide range of optional equipment is also available to meet your specific application requirements.

Specifications

Width — 16.8 [427]

Depth — 20.6 [523]

Height — 20 [510] without reel support

Weight — approx. 150 lb [68 kg]

Electrical — 100-240 VAC, 50/60 Hz, 6A *(Note: Avg <1 A at 120 VAC when used as a bench-top unit at 2,000 cycles per hour operating rate)*

Air — 90-100 psi [6.21-6.90 bar], 6 scfm [0.00282 m^3/s] when required for use with air-feed applicators *(Note: Optional Air Feed Valve Assembly Required)*

Wire Range — Up to 14 AWG [2.5 mm^2]

For more information, request catalog 1308382.

AMP-O-MATIC Stripper-Crimper Machines, 1320895-1, -2

Semiautomatic bench crimping machines that also strip the wire, and are therefore used for terminating jacketed cable. Feature manual precision adjustment of crimp height, keyed strip blades for faster, more accurate setups, and an efficient scrap removal system. All adjustments can be made from the front of the machines without special tools. Available with crimp quality monitoring.

Specifications

Width — 14 [355]

Depth — 18 [457]

Height — 33 [838] without reel

Weight — 150 lb [68 kg]

Electrical — 120 VAC, 50 or 60 Hz, .5 A

Air — 80-100 psi [5.52-6.90 bar], 3.5 scfm [0.00165 m^3/s]

Wire Range — 32-14 AWG [0.03-2 mm^2]

For more information, request Catalog 65004.

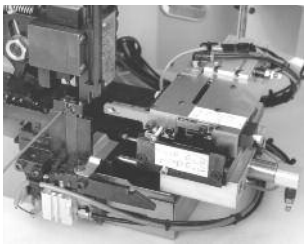

The combination of the Stripping Module with the Entry Level Terminator (ELT) or the AMP-O-LECTRIC Model G Terminator provides an economical and proficient method of stripping wire and crimping terminals on the same machine. Wires are stripped moments before crimping, meaning there is virtually no chance of damaging wire conductors during handling or storage. Once the wire is fed into the start sensor the Stripping Module does the rest, improving placement accuracy.

Specifications

Wire Range Base Module — 0.03 mm^2 - 2.0 mm^2 (32-14 AWG) (30-32 AWG may require special kit.)

Max. Insulation — .200 [5.08]

Cable Breakout — > 1.100 [29.00]

Strip Length — .100 - .400 [2.50 - 10.16]

Noise — Less than 82 dBA (Typical at operator position with standard mechanical feed applicator)

Weight — 4.53 Kilograms (10 lb)

Height — 5.000 [127.00]

Electrical — 100-240 VAC, 50/60 Hz, single phase current, obtains power from the terminator

Air — 620-760 kPa (90-100 psi), 2.83 liters/sec (6 scfm)

Wire Sensor — Gold plated contacts with laser etched target

For more information, request Catalog 1309085.

Dimensions are shown for reference purposes only. Specifications subject to change.

Dimensions are in millimeters unless otherwise specified.

USA: +1 800 522 6752
Asia Pacific: +86 0 400 820 6015
UK: +44 800 267 666

For additional support numbers please visit www.te.com

Application Tooling (Continued)

AMPOMATOR CLS IV+ Lead-Making Machines, 356500-1, -2

Fully-automatic machines that measure, cut, strip and terminate single leads. Microprocessor-controlled, and programmed and operated using an easy-to-follow, menu-driven touch-screen. Features include direct-drive terminating units with precision crimp height adjustment, fully programmable setups, wire runout and splice detection, and motorized pre-feed with wire straightener. Crimp quality monitoring is also available.

Specifications

Width — 159 [4 040]

Depth — 68 [1 730]

Height — 86 [2 185] with 24 [610] dia. reel

Weight — 2 000 lb [907 kg]

Electrical — 220 VAC, 50 or60 Hz, single phase, 25 A, with neutral and ground

Air — 90 psi [6.21 bar], 15 scfm [0.0071 m^3/s] sustained

Wire Range — 26-10 AWG [0.12-6 mm^2] stranded, 26-16 AWG [0.12-1.4 mm^2] solid

Lead Lengths — 3-90 [76.2-2 285], 90-1 000 [2 285-25 400] with long lead conveyors

For more information, request Catalog 124324.

Gamma 333 PC Lead-Making Machine, Three Stations, 1-528324-1

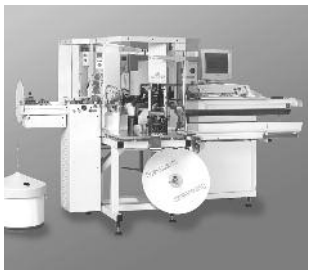

With its capacity to accommodate an additional processing station on side 1, the Gamma 333 PC can perform a number of new processes. It can produce two-ended crimp leads, process double crimp connections with three different terminals or apply seals on one end of the wire. Tinning and ink jet marking are two further options. Process monitoring is integrated into the system, for accurate trimming and stripping of the wires.

Specifications

Length — 125 [3137]

Width — 54.2 [1377]

Height — 70.5 [1790]

Length Range — 2.36 in-32.8 ft [60-10,000] (optional 30mm)

Cross-Section Range — AWG 26-AWG 10 [0.125mm^2-5mm^2]

Noise Level — <76dB (without crimping modules)

Electrical — 3x208 - 480V, 50-60Hz; 6kVA

Compressed Air — 5-6 bar

Air Consumption — 6.5m^3/h

Weight — 1850 lbs [840 kg] with two crimping modules

For more information, request Catalog 1307901.

Crimp Quality Monitor (CQM), 1320420-1, -2

This unique system provides 100% on-the-fly crimp inspection. It measures the crimp height of each termination, and evaluates the quality of each crimp. If a crimp is questionable, the monitor alerts the operator with both visual and audible alarms. It also provides ports for printing and networking. When used with AMP-O-LECTRIC Model "G" Termination Machines, the monitor is mounted to the machine. When used with AMPOMATOR CLS IV Lead-Making Machines, it is integrated into the machine's operating system.

Specifications

Width — 8.8 [220]

Depth — 8.1 [205]

Height — 4.6 [115]

Weight — 5 lb [2.3 kg]

Electrical — 100-240 VAC, 50/60 Hz, 3.2 A

For more information, request Catalog 82275.

Dimensions are shown for reference purposes only. Specifications subject to change.

Dimensions are in millimeters unless otherwise specified.

USA: +1 800 522 6752
Asia Pacific: +86 0 400 820 6015
UK: +44 800 267 666

For additional support numbers please visit www.te.com

Introduction

Product Facts

- **The TJS connections are inherently more reliable than conventional threaded and solder terminations**
- **The user's wiring is crimped to gold plated pin contacts, conforming the MIL-C-39029/1, which are individually mated to probe-proof gold plated pre-bussed sockets contained within the module and splice**
- **Modules and Splices — environment proof conforming to the requirements of MIL-T-81714. These modules can be assembled into MIL-T-81714 rails and are individually removable. Brackets are also available to mount individual or triads of modules. The splices are designed to terminate from two to four wires.**
- **Commercial TJS consists of module blocks (either environmental or non-environmental) designed for custom assembled installations. These can be furnished in pre-assembled arrays in rails or individually with rail kits to accommodate various rows and lengths of modules.**
- **TJS Connectors also qualified to German Army Standard VG 95212-31/ VG 95231-102/103/105**

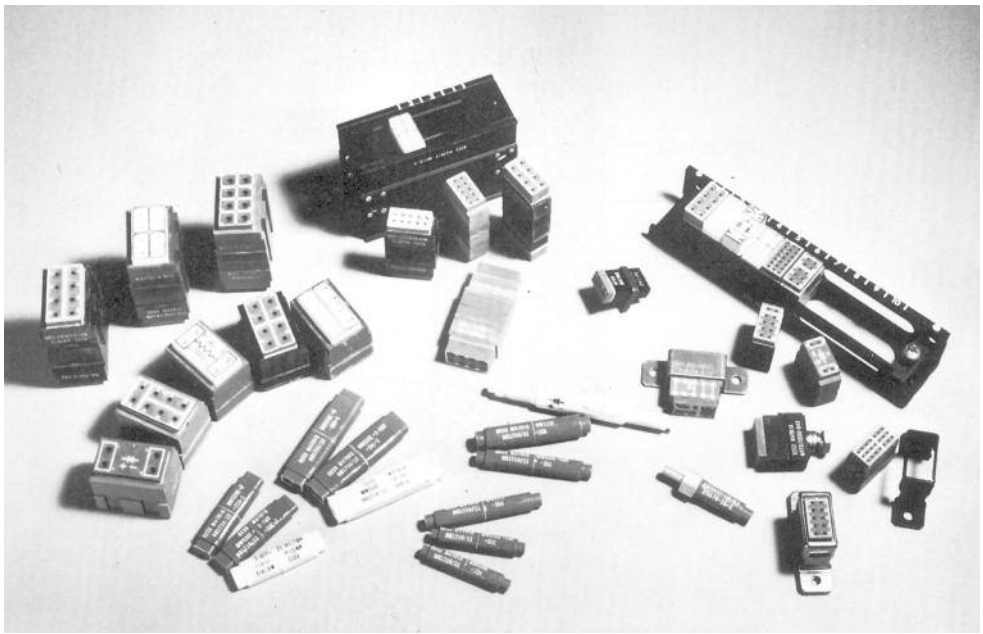

The Terminal Junction System (TJS) provides design engineers with a compact family of modules and splices for interconnecting wires. Both the modules and splices facilitate interconnecting with pre-bussed configurations to which the user's 22 thru 12 AWG wires are terminated with crimped removable pin contacts. Servicing tools required are the commonly available MIL-C-81969/14, plastic tool and MIL-C-22520 crimping tool used for rear release connector contacts.

The TJS eliminates many shortcomings of the conventional lug and threaded termination. The TJS has no loose attaching hardware, such as nuts, screws and lock-washers to complete the termination. The TJS saves space and weight over threaded terminations while reducing installation cost. There is complete electrical isolation and optional environmental sealing grommet in the TJS without user installed busses, barriers, insulating strips, potting and enclosures. The TJS module pre-bussed integral sockets are permanently connected in a variety of bussing arrangements to suit the most exacting circuit requirements. These modules can be user assembled into any required bussing arrangement and contact size permutation.

Typical Module Construction (Cross-Section)

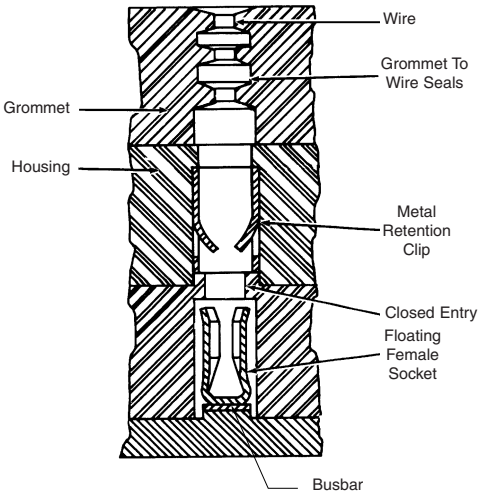

Module With Sealing Plug Installed (Cross-Section)

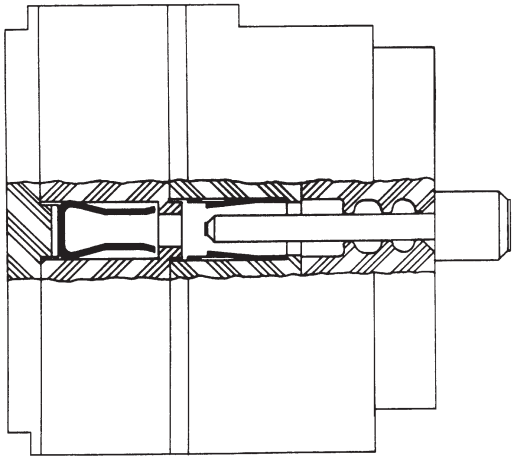

Catalog 1308940
Revised 9-14

www.te.com

Dimensions are shown for reference purposes only. Specifications subject to change.

Dimensions are in millimeters unless otherwise specified.

USA: +1 800 522 6752
Asia Pacific: +86 0 400 820 6015
UK: +44 800 267 666

For additional support numbers please visit www.te.com

Performance Specifications

Voltage Rating —

Sizes 22, 20, 16, 12

Altitude	DWV*	Working Voltage
Sea level	1,500 V	600 V
70,000 Feet**	600 V	300 V

Size 21 (22HD)

Altitude	DWV*	Working Voltage
Sea Level	1,000 V	600 V
70,000 Feet**	325 V	300 V

* DWV = Dielectric Withstanding Voltage
** [21,336m]

Contact Voltage Drop (Max.) —

Contact Size	Test Current	Initial	After Conditioning
21 (22HD)	5.0 A	55 mV	65 mV
22	5.0 A	45 mV	50 mV
20	7.5 A	45 mV	50 mV
16	13.0 A	50 mV	55 mV
12	23.0 A	40 mV	45 mV

The MV drop is measured across an adjacent bussed pair of wire contacts.

Operating Temperature Range —

Class	Minimum	Maximum
D	-65°C (-85°F)	+200°C (+392°F)

Altitude Immersion —
Insulation resistance shall not fall below 5,000 megohms after being subjected to three, 70,000-foot [21,336m] altitude immersion cycles in salt water.

Fluid Immersion —
Class D—Extended fluid type

Fluid	
MIL-H-5606	Hydraulic fluid
MIL-L-23699	Lubricating oil
MIL-T-5624	Aviation fuel
MIL-L-7808	Lubrication oil
MIL-A-8243	Anti-ice fluid
MIL-C-25769	Cleaning fluid
Skydrol	500A & 500B
Aerosafe	2300 & 2300W
Flyjet	III
Esso Oil	Turbo 25

Moisture Resistance —
High Humidity (95% RH) 100 megohms min.
After Drying—24 hours 1,000 megohms min.

Durability —
No performance degradation after 10 cycles of contact insertion/removal.

Vibration —
Class D
Sine, MIL-STD-202, method 204 condition G
Random, MIL-STD-1344, method 2005.

Shock —
Class D
MIL-STD-1344, Method 2004
(300 G, 3 milliseconds duration, half-sine).

Specifications —
QPL-AS390929
SAE-AS39029/1

Contacts, Sealing Plugs and Assembly Tools

Contacts and Sealing Plugs

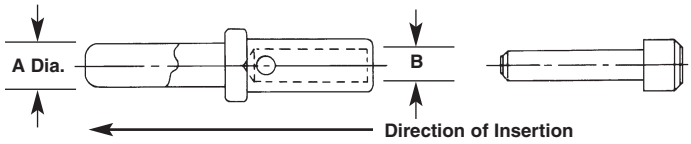

Size		Part Numbers Pin Contacts			Part Numbers Sealing Plugs		
A Dia.	Size	Commercial	Military	Wire Barrel	Commercial	Military	B
.039/.041	21(22HD)	592413-1	M39029/1-507	22D	592104-4	MS27488-22	—
.061/.063	22	3-592404-1	M39029/1-100	22	592104-1	MS27488-20	.035/.03
.061/.063	20	2-592404-1	M39029/1-101	20	592104-1	MS27488-20	.048/.05
.076/.078	16	1-592404-1	M39029/1-102	16	592104-2	MS27488-16	.066/.068
.093/.095	12	592404-1	M39029/1-103	12	592104-3	MS27488-12	.098/.102

Insertion/Removal Tools

Size	Part Numbers Commercial	Part Numbers Military	Color*	Wire Gage	Contact Wire Dia. Min./Max.	Finished Crimp Tool	Turret or Positioner
21(22HD)	—	M81969/14-01	Grn/Wh	28-22	**.030-.054** [.76-1.37]	M22520/2-01	M22520/2-32
22	592105-1	M81969/14-11	Rd/Wh	26-22	**.034-.066** [.86-1.68]	M22520/2-01	M22520/2-11
20	592105-1	M81969/14-11	Rd/Wh	24-20	**.038-.083** [.97-2.11]	M22520/1-01 or /2-01	M22520/1-02 or /2-02
16	592105-2	M81969/14-03	Blue/Wh	20-16	**.060-.101** [1.52-2.57]	M22520/1-01	M22520/1-02
12	—	M81969/14-04	Yel/Wh	14-12	**.087-.147** [2.21-3.73]	M22520/1-01	M22520/1-02

* Colored end for contact insertion; white end for release/removal.

Catalog 1308940
Revised 9-14

www.te.com

Dimensions are shown for reference purposes only. Specifications subject to change.

Dimensions are in millimeters unless otherwise specified.

USA: +1 800 522 6752
Asia Pacific: +86 0 400 820 6015
UK: +44 800 267 666

For additional support numbers please visit www.te.com

Feedback and Feedthru Terminal Junction Modules

MIL-T-81714 Terminal Junction module blocks are available in sizes 12, 16, 20, 22 and 22HD. The size 12 and 16 feedback blocks have eight cavities each. The size 20 and 22 feedback blocks have 10 cavities each (size 22HD has 21 cavities). The feedthru blocks have the same number of cavities situated on both sides of the block.

Military bussing arrangements are available with each size block.

These module blocks and mounting rail assemblies are qualified to MIL-T-81714. The pin contacts are qualified to MIL-C-39029/1.

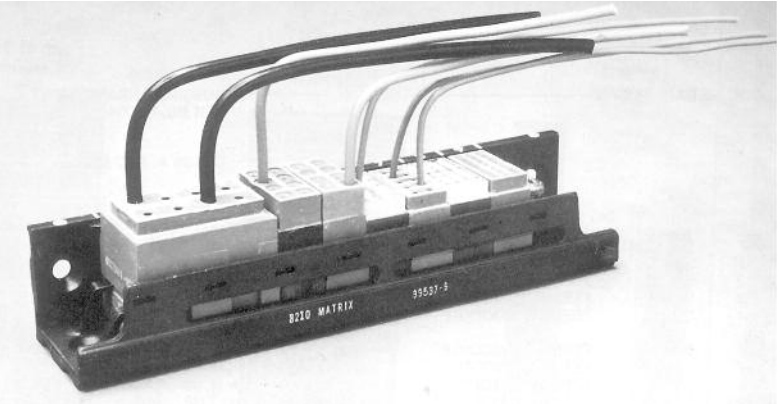

Feedthru

Military Part Numbers Feedthru Modules	AMP Commercial Part Numbers Feedthru Modules
(Class D) Size 20	
M81714/7-DA1	592608-3
M81714/7-DB1	592608-1
M81714/7-DB2	—
M81714/7-DB3	—
M81714/7-DC1	592608-8
M81714/7-DC2	—
M81714/7-DD1	592608-6
M81714/7-DE1	592608-5
M81714/7-DJ1	—
(Class D) Size 16	
M81714/8-DA1	592604-5
M81714/8-DB1	592604-3
M81714/8-DB2	592604-7

Military Part Numbers Feedthru Modules	AMP Commercial Part Numbers Feedthru Modules
(Class D) Size 16 (Continued)	
M81714/8-DC1	592604-9
M81714/8-DC2	—
M81714/8-DD1	592604-1
M81714/8-DH1	—
(Class D) Size 12	
M81714/9-DA1	592600-9
M81714/9-DB1	592600-7
M81714/9-DB2	1-592600-3
M81714/9-DC1	592600-1
M81714/9-DC2	1-592600-1
M81714/9-DD1	592600-5
M81714/9-DH1	592600-3

Notes: TE Connectivity has not qualified the Feedthru Modules to MIL-T-81714. The Military part number is shown for reference only.

Feedback

Military Part Numbers Feedback Modules	AMP MIL Qualified Part Numbers Feedback Modules	AMP Commercial Part Numbers Feedback Modules
(Class D) Size 22	**(Class D) Size 22**	**(Class D) Size 22**
M81714/1-DA1	—	592633-4
M81714/1-DB1	—	592633-2
M81714/1-DB2	—	1-592633-2
M81714/1-DB3	—	2-592633-0
M81714/1-DC1	—	1-592633-4
M81714/1-DC2	—	1-592633-0
M81714/1-DD1	—	592633-8
M81714/1-DE1	—	592633-6
(Class D) Size 21	**(Class D) Size 21**	**(Class D) Size 21**
M81714/17-D31	592629-1	592629-2
M81714/17-D32	592629-3	592629-4
M81714/17-D33	592629-5	592629-6
M81714/17-D34	592629-7	592629-8
M81714/17-D35	592629-9	1-592629-0
M81714/17-D36	4-592629-4	—
M81714/17-D37	1-529629-1	1-592629-2
M81714/17-D38	1-592629-3	1-592629-4
M81714/17-D39	1-592629-5	1-592629-6
M81714/17-D40	1-592629-7	1-592629-8
M81714/17-D42	4-592629-2	4-592629-0
M81714/17-D43	4-592629-3	—
M81714/17-D44	1-592629-9	2-592629-0
M81714/17-D45	4-592629-5	2-592629-2

Military Part Numbers Feedback Modules	AMP MIL Qualified Part Numbers Feedback Modules	AMP Commercial Part Numbers Feedback Modules
(Class D) SIZE 20	**(Class D) SIZE 20**	**(Class D) SIZE 20**
M81714/2-DA1	592624-3	592624-4
M81714/2-DB1	592624-1	592624-2
M81714/2-DB2	1-592624-0	1-592624-1
M81714/2-DB3	1-592624-8	1-592624-9
M81714/2-DC1	1-592624-2	1-592624-3
M81714/2-DC2	2-592624-2	592624-9
M81714/2-DD1	592624-7	592624-8
M81714/2-DE1	592624-5	592624-6
(Class D) SIZE 16	**(Class D) SIZE 16**	**(Class D) SIZE 16**
M81714/3-DA1	592620-5	592620-6
M81714/3-DB1	592620-3	592620-4
M81714/3-DB2	592620-9	1-592620-0
M81714/3-DC1	1-592620-1	1-592620-2
M81714/3-DC2	592620-7	592620-8
M81714/3-DD1	592620-1	592620-2
(Class D) SIZE 12	**(Class D) SIZE 12**	**(Class D) SIZE 12**
M81714/4-DA1		592616-6
M81714/4-DB1	—	592616-4
M81714/4-DB2	—	1-592616-0
M81714/4-DC1	—	1-592616-2
M81714/4-DC2	—	592616-8
M81714/4-DD1	—	592616-1

Catalog 1308940
Revised 9-14

www.te.com

Dimensions are shown for reference purposes only. Specifications subject to change.

Dimensions are in millimeters unless otherwise specified.

USA: +1 800 522 6752
Asia Pacific: +86 0 400 820 6015
UK: +44 800 267 666

For additional support numbers please visit www.te.com

Feedback Terminal Junction Modules

Typical Bussing Arrangements

Size 20 and 22 Modules

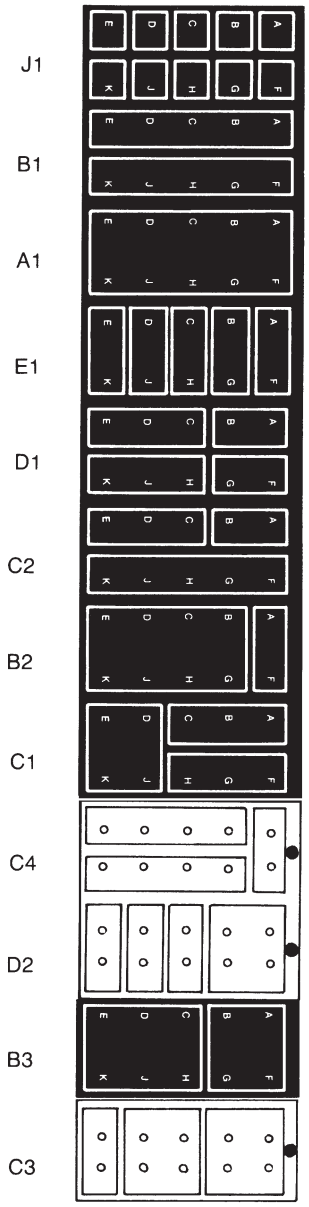

Size 16 Modules

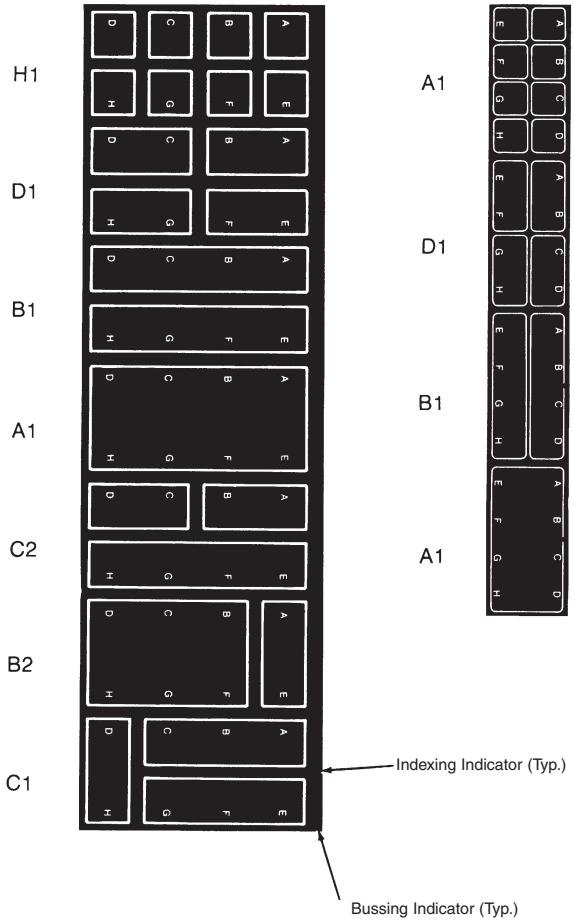

Size 12 Modules

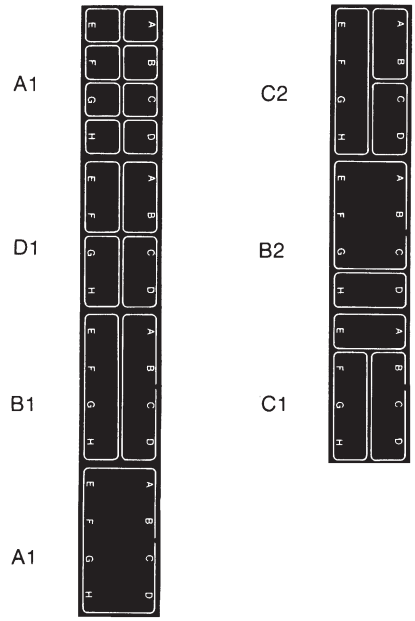

Consult TE Connectivity for additional bussing arrangements.

Military Part Numbering (Example)

M81714 / * - D **

Basic Military Prefix

Bussing Arrangement Per MIL-T-81714/*

Class D

Feedback Module	Size 22HD	**17**
	Size 22	**1**
	Size 20	**2**
	Size 16	**3**
	Size 12	**4**
Feedthru Module*	Size 22	**6**
	Size 20	**7**
	Size 16	**8**
	Size 12	**9**

* For Reference Only

Notes: 1. When ordered to military part number, contacts and sealing plugs are included.
2. Mounting hardware is not included; order separately. (See pages 8-166 and 8-167.)
3. Size 16 Module Dim. (Typ.) — (Feedback) .850 [21.59] L x .390 [9.91] W x 1.000 [25.40] H
(Feedthru) .850 [21.59] L x .390 [9.91] W x 1.830 [46.48] H

Dimensions are shown for reference purposes only. Specifications subject to change.

Dimensions are in millimeters unless otherwise specified.

USA: +1 800 522 6752
Asia Pacific: +86 0 400 820 6015
UK: +44 800 267 666

For additional support numbers please visit www.te.com

Feedback Terminal Junction Modules (Continued)

Typical Bussing Arrangements

Size 22HD Military, Size 21 Commercial Modules

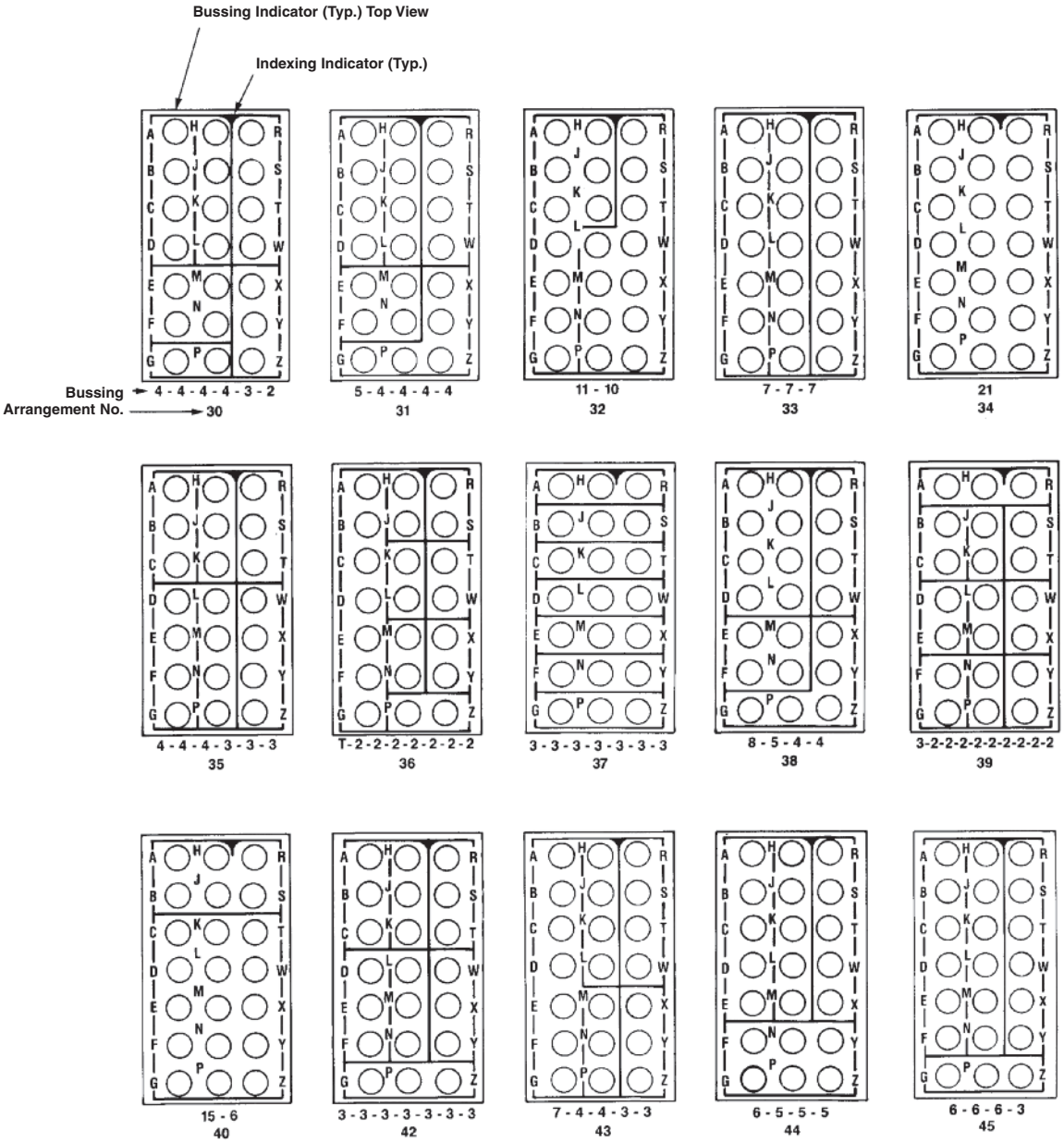

Catalog 1308940
Revised 9-14

www.te.com

Dimensions are shown for reference purposes only. Specifications subject to change.

Dimensions are in millimeters unless otherwise specified.

USA: +1 800 522 6752
Asia Pacific: +86 0 400 820 6015
UK: +44 800 267 666

For additional support numbers please visit www.te.com

Feedback Terminal Junction Modules (Continued)

Mounting Hardware

Standard Weight Rail Assembly Part Number 591613

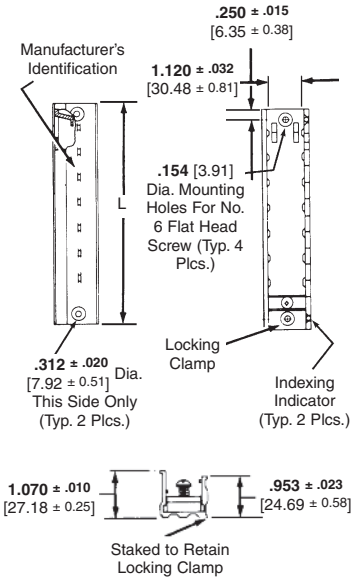

Rail Assembly Dimensions

Length L	591613 and 591621 Part Numbers			
	Standard Weight		Lightweight	
	Commercial	Military	Commercial	Military
	591613	M81714/5	591621	M81714/16
1.781 [45.24]	-1	—	-1	—
2.171 [55.14]	-2	—	-2	—
2.561 [65.05]	-3	-2	-3	-2
2.951 [74.96]	-4	-3	-4	-3
3.341 [84.86]	-5	-4	-5	-4
3.371 [85.62]	-6	-5	-6	-5
4.121 [104.67]	-7	-6	-7	-6
4.511 [114.58]	-8	-7	-8	-7
4.901 [124.49]	-9	-8	-9	-8
5.291 [134.39]	-10	-1	-10	-1
5.681 [144.30]	-11	-9	-11	-9
6.071 [154.20]	-12	-10	-12	-10
6.461 [164.11]	-13	-11	-13	-11
6.851 [174.02]	-14	-12	-14	-12
7.241 [183.92]	-15	-13	-15	-13
7.631 [193.83]	-16	—	-16	—
8.021 [203.73]	-17	—	-17	—
8.411 [213.64]	-18	—	-18	—
8.801 [223.54]	-19	—	-19	—
9.191 [233.45]	-20	—	-20	—

Rail Assemblies are made of black anodized aluminum alloy. Locking clamp screw is corrosion resistant steel (passivated). Rails will accommodate all sizes and various quantities of feedback modules in any combination.

Lightweight Rail Assembly Part Number 591621 (weight savings of up to 40%)

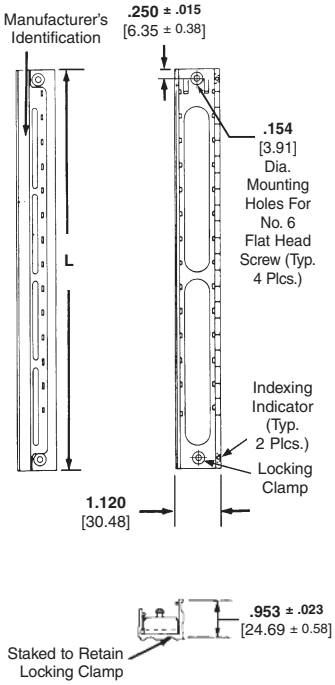

Rail Part Numbering

Military

M81714 / * - *

- **Non-Significant Length Number**
- **5** = Standard Weight
- **16** = Lightweight
- **Military Prefix**

Note: Rail Assemblies do not contain module blocks. Order separately. (See page 8-163.)

†(based on Size 22, 20, and 16 dimensions)

Individual Module Mounting Brackets

Part Number 591637-1

(Commercial equiv. to Military M81714/29-1)

Accommodates one Size 21, 22, 20 or 16 module.

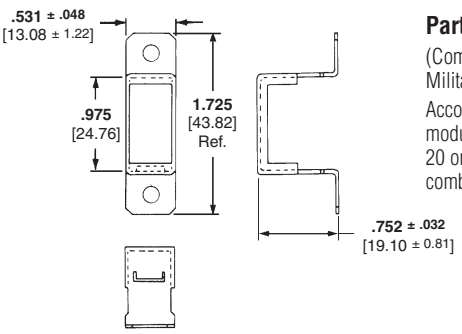

Part Number 591638-1

(Commercial equiv. to Military M81714/29-2)

Accommodates one Size 12 module or three Size 21, 22, 20 or 16 modules in any combination.

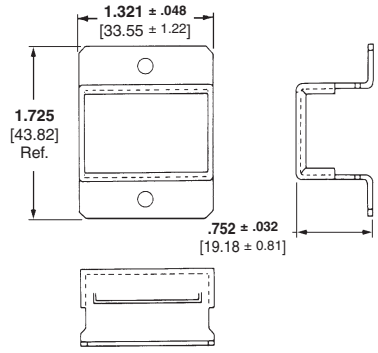

Catalog 1308940
Revised 9-14

www.te.com

Dimensions are shown for reference purposes only. Specifications subject to change.

Dimensions are in millimeters unless otherwise specified.

USA: +1 800 522 6752
Asia Pacific: +86 0 400 820 6015
UK: +44 800 267 666

For additional support numbers please visit www.te.com

Feedthru Terminal Junction Modules

Mounting Hardware

Standard Weight Rail Assembly Part Number 591601

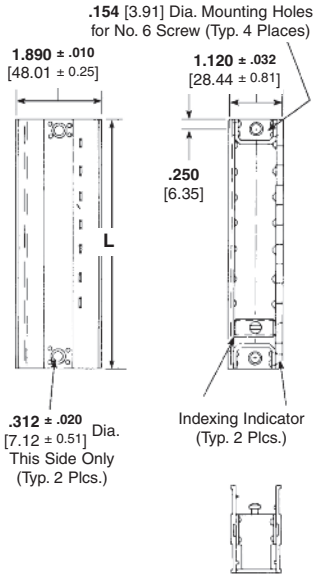

Lightweight Rail Assembly Part Number 591603

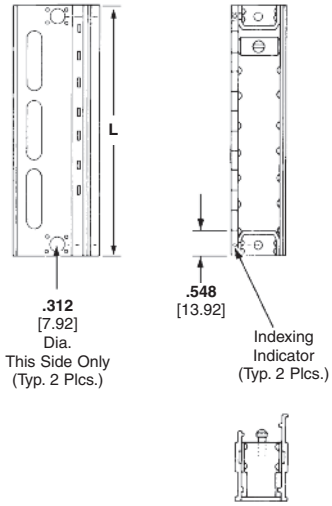

Rail Assembly Dimensions

Length L	591601 and 591603 Part Numbers	
	Standard Weight	Lightweight
	Commercial*	Commercial**
	591601	591603
2.041 [51.84]	-1	—
2.431 [61.75]	-2	—
2.821 [71.65]	-3	—
3.211 [81.56]	-4	—
3.601 [91.46]	-5	-4
3.991 [101.37]	-6	-5
4.381 [111.28]	-7	—
4.771 [121.18]	-8	—
5.161 [131.09]	-9	—
5.551 [141.00]	-10	—
5.941 [150.90]	-11	-1
6.331 [160.81]	-12	—
6.721 [170.71]	-13	—
7.111 [180.62]	-14	-2
7.501 [190.52]	-15	-3
7.891 [200.43]	-16	—
8.281 [210.34]	-17	—
8.671 [220.24]	-18	—
9.061 [230.15]	-19	—
9.451 [240.06]	-20	—

Rail Assemblies are made of black anodized aluminum alloy. Locking clamp screw is corrosion resistant steel (passivated). Rails will accommodate all sizes and various quantities of feed thru modules in any combination.

* Commercial equivalent to M81714/10–*
** Commercial equivalent to M81714/14–*

Dimensions are shown for reference purposes only. Specifications subject to change.

Dimensions are in millimeters unless otherwise specified.

USA: +1 800 522 6752
Asia Pacific: +86 0 400 820 6015
UK: +44 800 267 666

For additional support numbers please visit www.te.com

Feedback

Grounding Flange Modules

AMP Grounding Flange Blocks are available in Sizes 22, 20, 16 and 12. All contacts are bussed together and connected to a ground plate made of nickel plated aluminum.

HD22
Part Number 592840

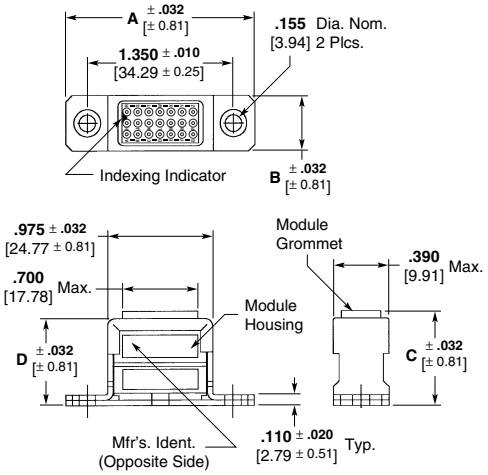

Size 20, 22
Part Number 592836

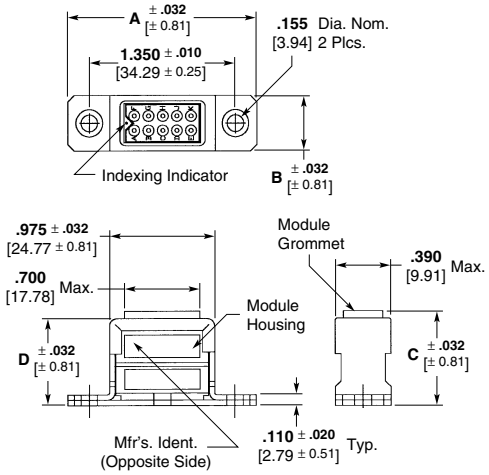

Size 12
Part Number 592820-1

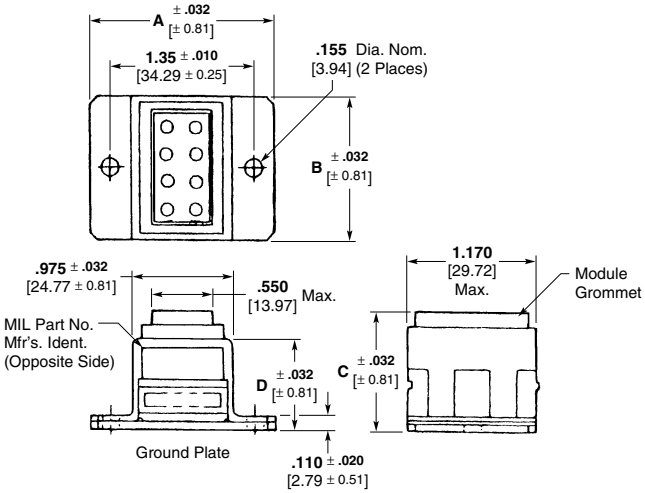

Size 16
Part Number 592830-1

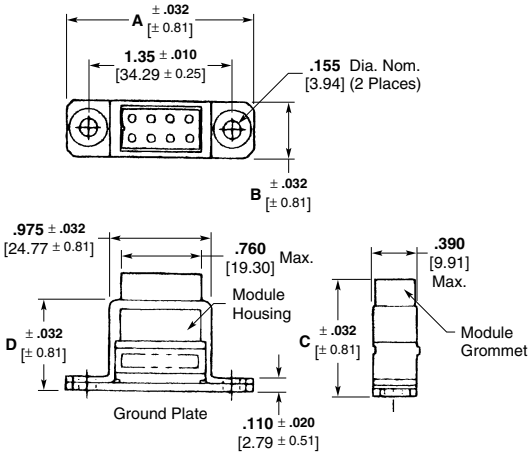

Commercial Equivalent to Military M81714/28-* **

Contact Size	Dimensions A	Dimensions B	Dimensions C	Dimensions D	Part Number
HD22	**1.725** 43.82	**0.515** 13.08	**0.880** 22.35	**0.817** 20.75	592840-2
22	**1.725** 43.82	**0.515** 13.08	**0.880** 22.35	**0.817** 20.75	592836-3
20	**1.725** 43.82	**0.515** 13.08	**0.880** 22.35	**0.817** 20.75	592836-1
16	**1.725** 43.82	**0.515** 13.08	**1.060** 26.92	**0.817** 20.75	592830-1
12	**1.725** 43.82	**1.305** 33.15	**1.060** 26.92	**0.817** 20.75	592820-1

Dimensions are shown for reference purposes only. Specifications subject to change.

Dimensions are in millimeters unless otherwise specified.

USA: +1 800 522 6752
Asia Pacific: +86 0 400 820 6015
UK: +44 800 267 666

For additional support numbers please visit www.te.com

Wire Splices

Single Splice

Built and qualified to MIL-T-81714, the commercial Single Wire Splice provides an environmentally reliable, positive and maintainable in-line disconnect between single wires. Their small diameter permits placement within a wire bundle or electrical harness. The standard M39029/1 pin contact is utilized. Single wire splices are available per MIL-T-81714.

Double Splice

Provides an environmental in-line disconnect for joining up to four wires. Bussed or unbussed contacts are available permitting the versatility of joining wires in double, triple or quadruple combinations.

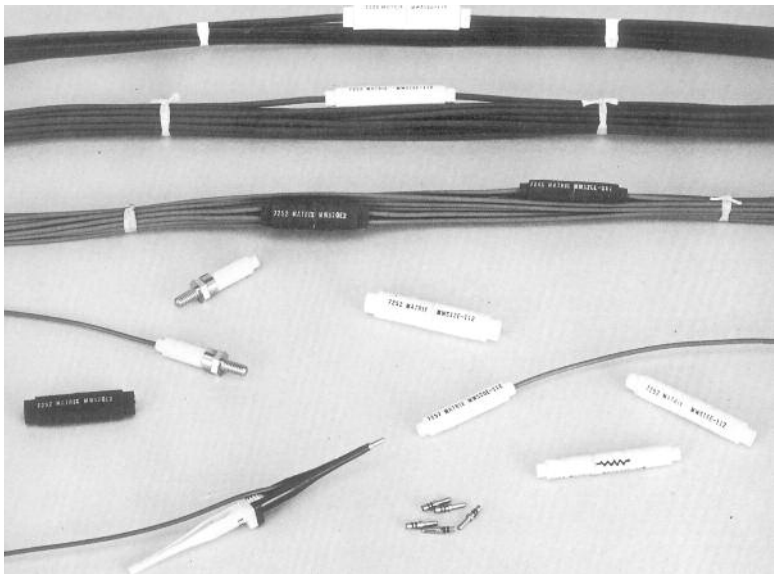

Part Numbering

Military

M81714/ ** - ** * - *

- **Bussing**
- **Blank =** Single Wire Splice
- **Class A, B, C or D**
- **Contact Size**
- **11 =** Single Wire Splice
- **Basic Military Prefix**

Double Spliced

Contact Size	Bussed Part Number	Unbussed Part Number
22	592588-6	—
20	592588-5	592589-1
16	592588-4	—

Single Splice

Contact Size	Part Number	MIL Part No. M81714/11
20	592583-3	-20D
16	592583-2	-16D
12	592583-1	-12D

Catalog 1308940
Revised 9-14

www.te.com

Dimensions are shown for reference purposes only. Specifications subject to change.

Dimensions are in millimeters unless otherwise specified.

USA: +1 800 522 6752
Asia Pacific: +86 0 400 820 6015
UK: +44 800 267 666

For additional support numbers please visit www.te.com

Electronic Module Blocks and Splices

Electronic Modules, Splices and Mounting Hardware are custom engineered to suit the user's application. During design, specific part numbers will be assigned. (see page 8-174.)

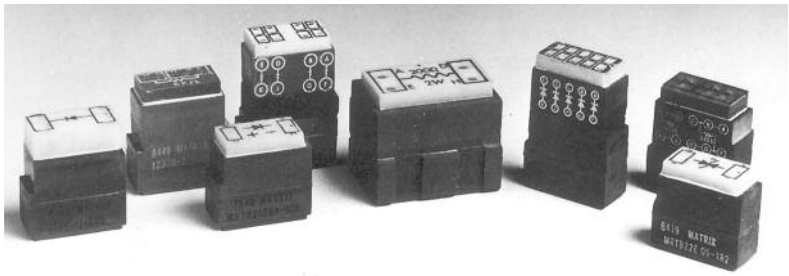

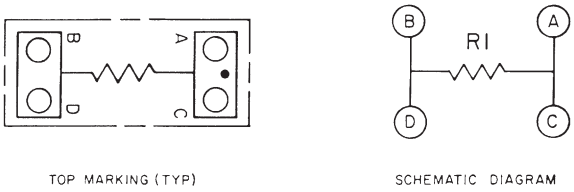

Fig. 1A

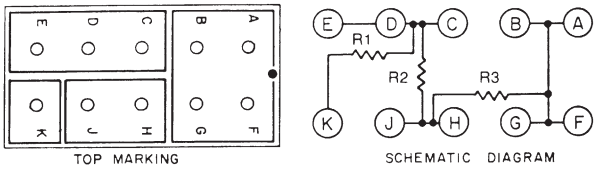

Fig. 5A

Fig. 2A

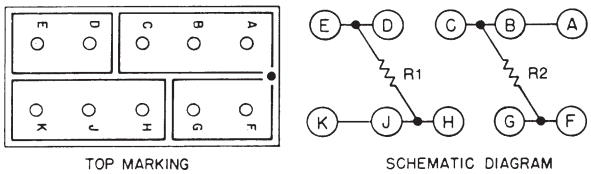

Fig. 6A

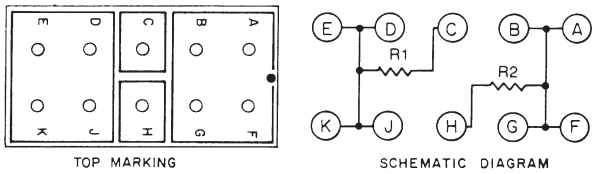

Fig. 3A

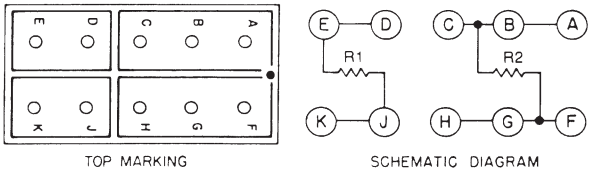

Fig. 7A

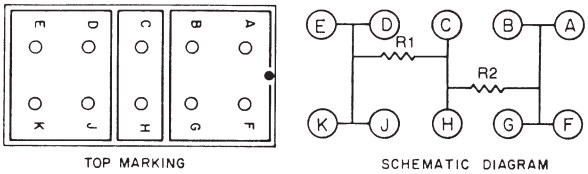

Fig. 4A

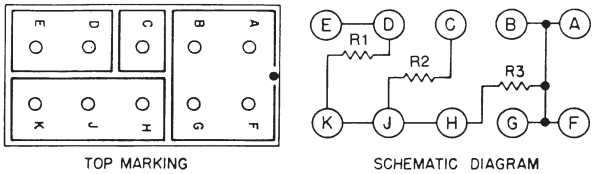

Fig. 8A

Consult TE Connectivity for additional circuit arrangements.

Catalog 1308940
Revised 9-14

www.te.com

Dimensions are shown for reference purposes only. Specifications subject to change.

Dimensions are in millimeters unless otherwise specified.

USA: +1 800 522 6752
Asia Pacific: +86 0 400 820 6015
UK: +44 800 267 666

For additional support numbers please visit www.te.com

Electronic Module Blocks (Continued)

Typical Diode Circuit Arrangements

(See page 8-174 for Part Numbers.)

Fig. 1B

Fig. 2B

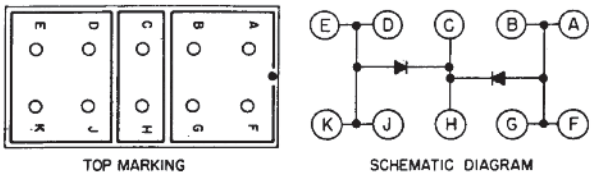

Fig. 3B

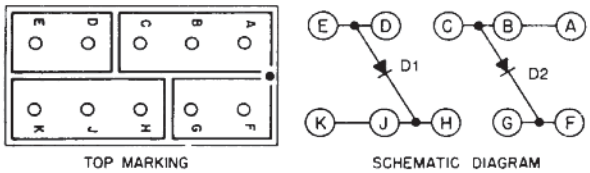

Fig. 4B

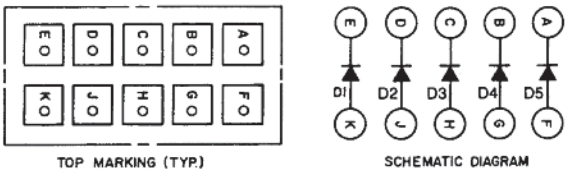

Fig. 5B

Fig. 6B

Fig. 7B

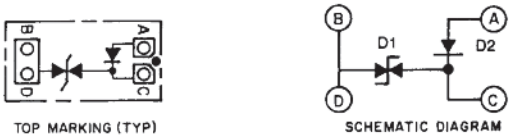

Fig. 8B

Consult TE Connectivity for additional circuit arrangements.

Catalog 1308940
Revised 9-14

www.te.com

Dimensions are shown for reference purposes only. Specifications subject to change.

Dimensions are in millimeters unless otherwise specified.

USA: +1 800 522 6752
Asia Pacific: +86 0 400 820 6015
UK: +44 800 267 666

For additional support numbers please visit www.te.com

Electronic Module Blocks (Continued)

Typical Combination Circuit Arrangements

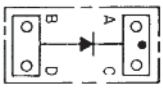

TOP MARKING

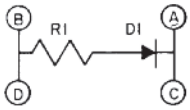

SCHEMATIC DIAGRAM

Fig. 1C

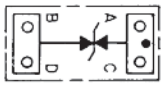

TOP MARKING

SCHEMATIC DIAGRAM

Fig. 5C

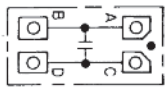

TOP MARKING (TYP)

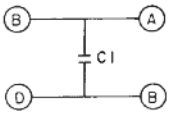

SCHEMATIC DIAGRAM

Fig. 2C

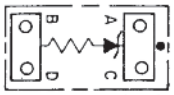

TOP MARKING (TYP)

SCHEMATIC DIAGRAM

Fig. 6C

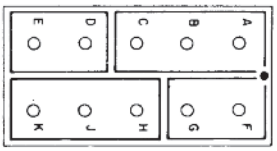

TOP MARKING

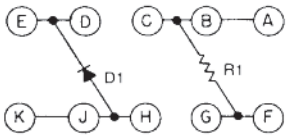

SCHEMATIC DIAGRAM

Fig. 3C

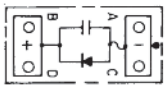

TOP MARKING

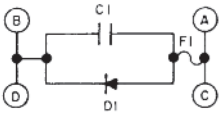

SCHEMATIC DIAGRAM

Fig. 7C

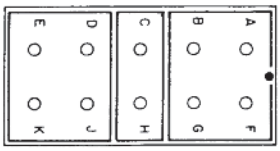

TOP MARKING

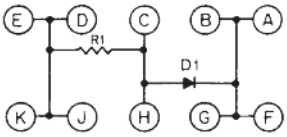

SCHEMATIC DIAGRAM

Fig. 4C

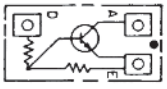

TOP MARKING

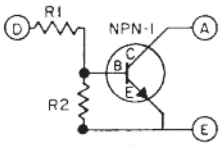

SCHEMATIC DIAGRAM

Fig. 8C

Consult TE Connectivity for additional circuit arrangements.

Dimensions are shown for reference purposes only. Specifications subject to change.

Dimensions are in millimeters unless otherwise specified.

USA: +1 800 522 6752
Asia Pacific: +86 0 400 820 6015
UK: +44 800 267 666

For additional support numbers please visit www.te.com

Commercial Electronic Splices

Various Component Types

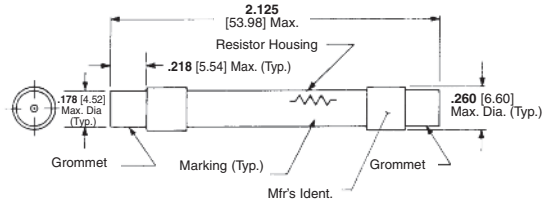

Fig. 1D

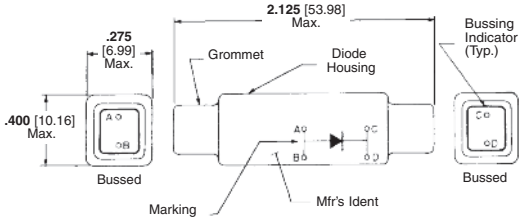

Fig. 5D

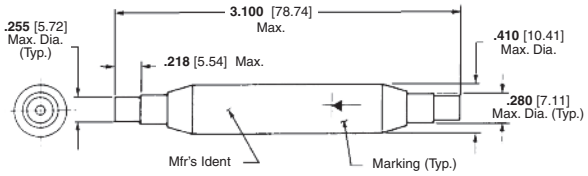

Fig. 2D

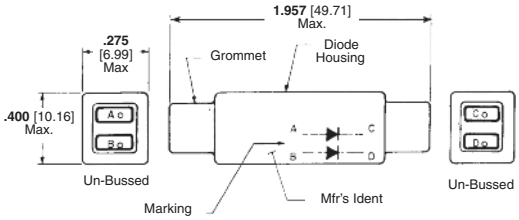

Fig. 6D

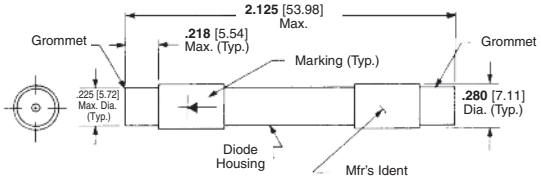

Fig. 3D

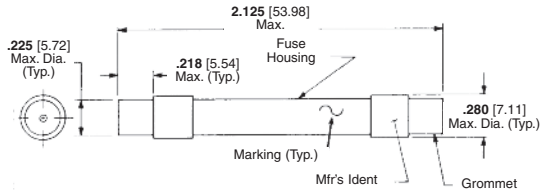

Fig. 7D

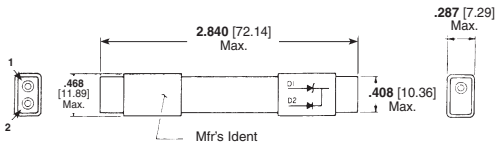

Fig. 4D

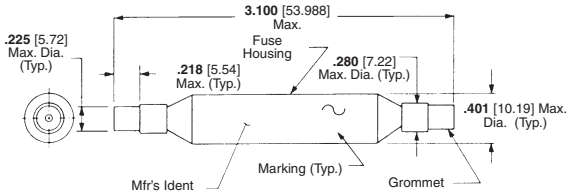

Fig. 8D

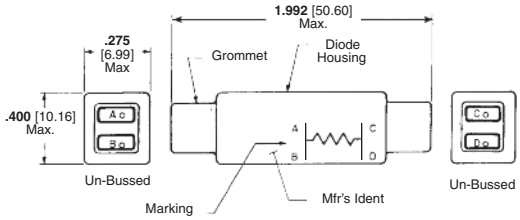

Fig. 9D

Dimensions are shown for reference purposes only. Specifications subject to change.

Dimensions are in millimeters unless otherwise specified.

USA: +1 800 522 6752
Asia Pacific: +86 0 400 820 6015
UK: +44 800 267 666

For additional support numbers please visit www.te.com

Electronic Module Blocks and Splices Part Numbering Information

Description	Figure	Part Number	RoHS Compliant Part Number	Electrical Information
Module Blocks	Fig. 1A	591872-1	—	R1=1500 Ω RCR07G152J¨S
		591873-1	—	R1=9100 Ω RLR07C9101GS
		591829-3	—	R1=150 Ω
		591899-1	—	R=RLR20C10R0GS 10 Ω
	Fig. 2A	591892-1	—	R1=R2=127 Ω RNC55H1270FS
		591898-1	5-591898-1	R1=R2=10 Ω RLR20C10R0GS
		591876-1	—	R1=180 Ω RLR07C1800GS R2=487 Ω RLR07C4870FS
		591871-1	5-591871-1	R1=R2=2200 Ω RCR07G222JS
		591875-1	—	R1=180 Ω RLR07C1800GS R2=348 Ω RLR07C3480FS
	Fig. 4A	591911-1	—	R1=34.8 kΩ R2=21.5 kΩ
	Fig. 5B	591854-1	—	D1=D2=D3=D4=D5=JAN1N5618
		591855-1	—	D1=D2=D3=D4=D5=JANTX1N5618
		591857-2	—	D1=D2=D3=D4=D5=JANTX1N5618
	Fig. 7B	592887-1	—	D1=D2=D3=D4=1N4007
Module Blocks (Diode Circuits)	Fig. 1B	591893-2	—	D1=JANTX1N5624
		591894-2	—	D1=JANTX1N751A
		591896-2	—	D1=JANTX1N5552
		591893-2	—	D1=JANTX1N5624
		591894-2	—	D1=JANTX1N751A
		591895-2	5-591895-2	D1=JANTX1N5618
		591864-1	5-591864-1	D1=JAN1N5618
	Fig. 5B	591866-1	—	D1=D2=D3=D4=D5=JANTX1N5554
		591863-1	5-591863-1	D1=D2=D3=D4=D5=JANTX1N5552
		591863-4	—	D1=D2=D3=D4=D5=1N4007
		591865-1	—	D1=D2=D3=D4=D5=JANTX1N5618 Class A
		591855-1	—	D1=D2=D3=D4=D5=JANTX1N5618
Splices	Fig. 2D	591917-1	5-591917-1	R1=RN65C1270F 127 Ω
		591917-3	—	R1=RNC60J1002FS 10 Ω
		591917-4	—	R1=RC20GF681J 680 Ω
		591917-5	—	R1=RLR32C1201GM 1200 Ω
		591917-7	—	R1=RLR32C1000GS 100 Ω
		1-591917-2	—	R1=RLR07C1001GR 1000 Ω
		1-591917-3	—	R1=RLR32C1000GR 100 Ω
		591846-2	—	D1=1N5199
	Fig. 3D	591847-3	—	D1=JAN1N5618
	Fig. 4D	591992-1	—	D1=JANTX1N4972 D2=JANTX1N5618
	Fig. 5D	591841-1	5-591841-1	D1=JAN1N5618
		591889-1	5-591889-1	D1=1N3981
		591890-1	5-591890-1	D1=1N5367B
	Fig. 6D	591842-1	5-591842-1	D1=D2=JAN1N5618

Dimensions are shown for reference purposes only. Specifications subject to change.

Dimensions are in millimeters unless otherwise specified.

USA: +1 800 522 6752
Asia Pacific: +86 0 400 820 6015
UK: +44 800 267 666

For additional support numbers please visit www.te.com

Military Cross Reference

Note: Products are also qualified to VG 95212-31/ VG 95231-102/103/105. Please contact TE Connectivity for cross reference.

Military Part Numbers Feedback Modules	AMP MIL Qualified Part Numbers Feedback Modules	AMP Commercial Part Numbers Feedback Modules
(Class A) Size 22		
M81714/1-AA1	—	592634-4
M81714/1-AB1	—	592634-2
M81714/1-AB2	—	1-592634-2
M81714/1-AB3	—	1-592634-7
M81714/1-AC1	—	1-592634-4
M81714/1-AC2	—	1-592634-0
M81714/1-AD1	—	592634-8
M81714/1-AE1	—	592634-6
(Class A) Size 21		
M81714/17-A31	592630-3	592630-4
M81714/17-A32	592630-5	592630-6
M81714/17-A33	592630-7	592630-8
M81714/17-A34	592630-9	1-592630-0
M81714/17-A35	1-592630-1	1-592630-2
M81714/17-A36	1-592630-3	1-592630-4
M81714/17-A37	1-592630-5	1-592630-6
M81714/17-A38	1-592630-7	1-592630-8
M81714/17-A39	1-592630-9	2-592630-0
M81714/17-A40	2-592630-1	2-592630-2
M81714/17-A42	2-592630-3	2-592630-4
M81714/17-A43	4-592630-3	4-592630-4
M81714/17-A44	2-592630-5	2-592630-6
M81714/17-A45	2-592630-7	2-592630-8
(Class A) Size 20		
M81714/2-AA1	592625-5	592625-6
M81714/2-AB1	592625-3	592625-4
M81714/2-AB2	1-592625-3	1-592625-4
M81714/2-AB3	2-592625-1	2-592625-2
M81714/2-AC1	1-592625-5	1-592625-6
M81714/2-AC2	1-592625-1	1-592625-2
M81714/2-AD1	592625-9	1-592625-0
M81714/2-AE1	592625-7	592625-8
(Class A) Size 16		
M81714/3-AA1	592621-7	592621-8
M81714/3-AB1	592621-5	592621-6
M81714/3-AB2	1-592621-1	1-592621-2
M81714/3-AC1	1-592621-3	1-592621-4
M81714/3-AC2	592621-9	1-592621-0
M81714/3-AD1	592621-3	592621-4
(Class A) Size 12		
M81714/4-AA1	—	592617-8
M81714/4-AB1	—	592617-6
M81714/4-AB2	—	1-592617-2
M81714/4-AC1	—	1-592617-4
M81714/4-AC2	—	1-592617-0
M81714/4-AD1	—	592617-4
(Class B) Size 22		
M81714/1-BA1	—	592636-4
M81714/1-BB1	—	592636-2
M81714/1-BB2	—	1-592636-2
M81714/1-BB3	—	1-592636-6
M81714/1-BC1	—	1-592636-4
M81714/1-BC2	—	1-592636-0
M81714/1-BD1	—	592636-8
M81714/1-BE1	—	592636-6
(Class B) Size 21		
M81714/17-B31	592631-3	592631-4
M81714/17-B32	592631-5	592631-6
M81714/17-B33	592631-7	592631-8

Feedback Modules (Class B) Size 21 Continued on page 8-176

Military Cross Reference (Continued)

Military Part Numbers Feedback Modules	AMP MIL Qualified Part Numbers Feedback Modules	AMP Commercial Part Numbers Feedback Modules
(Class B) Size 21 (Continued)		
M81714/17-B34	592631-9	1-592631-0
M81714/17-B35	1-592631-1	1-592631-2
M81714/17-B36	1-592631-3	1-592631-4
M81714/17-B37	1-592631-5	1-592631-6
M81714/17-B38	4-592631-4	—
M81714/17-B39	1-592631-7	1-592631-8
M81714/17-B40	4-592631-2	—
M81714/17-B42	1-592631-9	2-592631-0
M81714/17-B43	2-592631-1	2-592631-2
M81714/17-B44	2-592631-4	2-592631-5
M81714/17-B45	4-592631-3	—
(Class B) Size 20		
M81714/2-BA1	592627-3	592627-4
M81714/2-BB1	592627-1	592627-2
M81714/2-BB2	1-592627-1	1-592627-2
M81714/2-BB3	1-592627-5	1-592627-6
M81714/2-BC1	1-592627-3	1-592627-4
M81714/2-BC2	592627-9	1-592627-0
M81714/2-BD1	592627-7	592627-8
M81714/2-BE1	592627-5	592627-6
(Class B) Size 16		
M81714/3-BA1	592623-5	592623-6
M81714/3-BB1	592623-3	592623-4
M81714/3-BB2	592623-9	1-592623-0
M81714/3-BC1	1-592623-1	1-592623-2
M81714/3-BC2	592623-7	592623-8
M81714/3-BD1	592623-1	592623-2
(Class B) Size 12		
M81714/4-BA1	—	592619-6
M81714/4-BB1	—	592619-4
M81714/4-BB2	—	1-592619-0
M81714/4-BC1	—	1-592619-2
M81714/4-BC2	—	592619-8
M81714/4-BD1	—	592619-2
(Class C) Size 22		
M81714/1-CA1	—	592635-4
M81714/1-CB1	—	592635-2
M81714/1-CB2	—	1-592635-2
M81714/1-CB3	—	1-592635-6
M81714/1-CC1	—	1-592635-4
M81714/1-CC2	—	1-592635-0
M81714/1-CD1	—	592635-8
M81714/1-CE1	—	592635-6
(Class C) Size 21		
M81714/17-C31	592632-1	592632-2
M81714/17-C32	4-592632-3	—
M81714/17-C33	592632-3	592632-4
M81714/17-C34	592632-5	—
M81714/17-C35	592632-6	592632-7
M81714/17-C36	592632-8	592632-9
M81714/17-C37	1-592632-1	1-592632-2
M81714/17-C38	1-592632-3	—
M81714/17-C39	4-592632-4	—
M81714/17-C40	1-592632-4	1-592632-5
M81714/17-C41	4-592632-1	—
M81714/17-C42	4-592632-5	—
M81714/17-C43	1-592632-6	1-592632-7
M81714/17-C44	1-592632-8	1-592632-9
M81714/17-C45	4-592632-6	—

Dimensions are shown for reference purposes only. Specifications subject to change.

Dimensions are in millimeters unless otherwise specified.

USA: +1 800 522 6752
Asia Pacific: +86 0 400 820 6015
UK: +44 800 267 666

For additional support numbers please visit www.te.com

Military Cross Reference (Continued)

Military Part Numbers Feedback Modules	AMP MIL Qualified Part Numbers Feedback Modules	AMP Commercial Part Numbers Feedback Modules
(Class C) Size 20		
M81714/2-CA1	592626-3	592626-4
M81714/2-CB1	592626-1	592626-2
M81714/2-CB2	1-592626-1	1-592626-2
M81714/2-CB3	2-592626-4	1-592626-5
M81714/2-CC1	1-592626-3	1-592626-4
M81714/2-CC2	592626-9	1-592626-0
M81714/2-CD1	592626-7	592626-8
M81714/2-CE1	592626-5	592626-6
(Class C) Size 16		
M81714/3-CA1	592622-5	592622-6
M81714/3-CB1	592622-3	592622-4
M81714/3-CB2	592622-9	1-592622-0
M81714/3-CC1	1-592622-1	1-592622-2
M81714/3-CC2	592622-7	592622-8
M81714/3-CD1	592622-1	592622-2
(Class C) Size 12		
M81714/4-CA1	—	592618-6
M81714/4-CB1	—	592618-4
M81714/4-CB2	—	1-592618-0
M81714/4-CC1	—	1-592618-2
M81714/4-CC2	—	592618-8
M81714/4-CD1	—	592618-2
(Class D) Size 22		
M81714/1-DA1	—	592633-4
M81714/1-DB1	—	592633-2
M81714/1-DB2	—	1-592633-2
M81714/1-DB3	—	2-592633-0
M81714/1-DC1	—	1-592633-4
M81714/1-DC2	—	1-592633-0
M81714/1-DD1	—	592633-8
M81714/1-DE1	—	592633-6
(Class D) Size 21		
M81714/17-D31	592629-1	592629-2
M81714/17-D32	592629-3	592629-4
M81714/17-D33	592629-5	592629-6
M81714/17-D34	592629-7	592629-8
M81714/17-D35	592629-9	1-592629-0
M81714/17-D36	4-592629-4	—
M81714/17-D37	1-592629-1	1-592629-2
M81714/17-D38	1-592629-3	1-592629-4
M81714/17-D39	1-592629-5	1-592629-6
M81714/17-D40	1-592629-7	1-592629-8
M81714/17-D42	4-592629-2	4-592629-0
M81714/17-D43	4-592629-3	—
M81714/17-D44	1-592629-9	2-592629-0
M81714/17-D45	4-592629-5	2-592629-2
(Class D) Size 20		
M81714/2-DA1	592624-3	592624-4
M81714/2-DB1	592624-1	592624-2
M81714/2-DB2	1-592624-0	1-592624-1
M81714/2-DB3	1-592624-8	1-592624-9
M81714/2-DC1	1-592624-2	1-592624-3
M81714/2-DC2	2-592624-2	592624-9
M81714/2-DD1	592624-7	592624-8
M81714/2-DE1	592624-5	592624-6

Military Cross Reference (Continued)

Military Part Numbers Feedback Modules	AMP MIL Qualified Part Numbers Feedback Modules	AMP Commercial Part Numbers Feedback Modules
(Class D) Size 16		
M81714/3-DA1	592620-5	592620-6
M81714/3-DB1	592620-3	592620-4
M81714/3-DB2	592620-9	1-592620-0
M81714/3-DC1	1-592620-1	1-592620-2
M81714/3-DC2	592620-7	592620-8
M81714/3-DD1	592620-1	592620-2
M81714/4-DA1	—	592616-6
M81714/4-DB1	—	592616-4
M81714/4-DB2	—	1-592616-0
M81714/4-DC1	—	1-592616-2
M81714/4-DC2	—	592616-8
M81714/4-DD1	—	592616-1

Military Part Numbers Wire Splice	AMP MIL Qualified Part Numbers Wire Splice	AMP Commercial Part Numbers Wire Splice
(Class A) Size 22		
M81714/11-22A	—	1-592575-9
(Class A) Size 20		
M81714/11-20A	592575-7	1-592575-8
(Class A) Size 16		
M81714/11-16A	592575-4	1-592575-4
(Class A) Size 12		
M81714/11-12A	592575-1	1-592575-3
(Class B) Size 22		
M81714/11-22B	—	1-592575-6
(Class B) Size 20		
M81714/11-20B	592575-9	2-592575-2
(Class B) Size 16		
M81714/11-16B	592575-6	2-592575-0
(Class B) Size 12		
M81714/11-12B	592575-3	—
(Class C) Size 22		
M81714/11-22C	—	1-592575-5
(Class C) Size 20		
M81714/11-20C	592575-8	2-592575-1
(Class C) Size 16		
M81714/11-16C	592575-5	1-592575-9
(Class C) Size 12		
M81714/11-12C	592575-2	—
(Class D) Size 22		
M81714/11-22D	—	592583-7
(Class D) Size 20		
M81714/11-20D	592583-3	592583-6
(Class D) Size 16		
M81714/11-16D	592583-2	592583-5
(Class D) Size 12		
M81714/11-12D	592583-1	—

Dimensions are shown for reference purposes only. Specifications subject to change.

Dimensions are in millimeters unless otherwise specified.

USA: +1 800 522 6752
Asia Pacific: +86 0 400 820 6015
UK: +44 800 267 666

For additional support numbers please visit www.te.com

Military Cross Reference (Continued)

Military Part Numbers Feedthru Modules	AMP MIL Qualified Part Numbers Feedthru Modules	AMP Commercial Part Numbers Feedthru Modules
(Class A) Size 22		
M81714/6-AA1	—	592613-6
M81714/6-AB1	—	592613-4
M81714/6-AB2	—	1-592613-6
M81714/6-AB3	—	2-592613-0
M81714/6-AC1	—	1-592613-8
M81714/6-AC2	—	1-592613-4
M81714/6-AD1	—	1-592613-2
M81714/6-AE1	—	592613-8
M81714/6-AJ1	—	592613-2
(Class A) Size 20		
M81714/7-AA1	—	592609-6
M81714/7-AB1	—	592609-4
M81714/7-AB2	—	1-592609-4
M81714/7-AB3	—	1-592609-8
M81714/7-AC1	—	1-592609-6
M81714/7-AC2	—	1-592609-2
M81714/7-AD1	—	1-592609-0
M81714/7-AE1	—	592609-8
M81714/7-AJ1	—	592609-2

Catalog 1308940
Revised 9-14

www.te.com

Dimensions are shown for reference purposes only. Specifications subject to change.

Dimensions are in millimeters unless otherwise specified.

USA: +1 800 522 6752
Asia Pacific: +86 0 400 820 6015
UK: +44 800 267 666

For additional support numbers please visit www.te.com

Military Cross Reference (Continued)

Military Part Numbers Feedthru Modules	AMP MIL Qualified Part Numbers Feedthru Modules	AMP Commercial Part Numbers Feedthru Modules
(Class A) Size 16		
M81714/8-AA1	—	592605-8
M81714/8-AB1	—	592605-6
M81714/8-AB2	—	1-592605-2
M81714/8-AC1	—	1-592605-4
M81714/8-AC2	—	1-592605-0
M81714/8-AD1	—	592605-4
M81714/8-AH1	—	592605-2
(Class A) Size 12		
M81714/9-AA1	—	592601-8
M81714/9-AB1	—	592601-6
M81714/9-AB2	—	1-592601-2
M81714/9-AC1	—	1-592601-4
M81714/9-AC2	—	1-592601-0
M81714/9-AD1	—	592601-4
M81714/9-AH1	—	592601-2
(Class B) Size 22		
M81714/6-BA1	—	592615-6
M81714/6-BB1	—	592615-4
M81714/6-BB2	—	1-592615-4
M81714/6-BB3	—	1-592615-8
M81714/6-BC1	—	1-592615-6
M81714/6-BC2	—	1-592615-2
M81714/6-BD1	—	1-592615-0
M81714/6-BE1	—	592615-8
M81714/6-BJ1	—	592615-2
(Class B) Size 20		
M81714/7-BA1	—	592611-6
M81714/7-BB1	—	592611-4
M81714/7-BB2	—	1-592611-4
M81714/7-BB3	—	1-592611-8
M81714/7-BC1	—	1-592611-6
M81714/7-BC2	—	1-592611-2
M81714/7-BD1	—	1-592611-0
M81714/7-BE1	—	592611-8
M81714/7-BJ1	—	592611-2
(Class B) Size 16		
M81714/8-BA1	—	592607-8
M81714/8-BB1	—	592607-6
M81714/8-BB2	—	1-592607-2
M81714/8-BC1	—	1-592607-4
M81714/8-BC2	—	1-592607-0
M81714/8-BD1	—	592607-4
M81714/8-BH1	—	592607-2
(Class B) Size 12		
M81714/9-BA1	—	592603-8
M81714/9-BB1	—	592603-6
M81714/9-BB2	—	1-592603-2
M81714/9-BC1	—	1-592603-4
M81714/9-BC2	—	1-592603-0
M81714/9-BD1	—	592603-4
M81714/9-BH1	—	592603-2

Dimensions are shown for reference purposes only. Specifications subject to change.

Dimensions are in millimeters unless otherwise specified.

USA: +1 800 522 6752
Asia Pacific: +86 0 400 820 6015
UK: +44 800 267 666

For additional support numbers please visit www.te.com

Military Cross Reference (Continued)

Military Part Numbers Feedthru Modules	AMP MIL Qualified Part Numbers Feedthru Modules	AMP Commercial Part Numbers Feedthru Modules
(Class C) Size 22		
M81714/6-CA1	—	592614-6
M81714/6-CB1	—	592614-4
M81714/6-CB2	—	1-592614-4
M81714/6-CB3	—	1-592614-8
M81714/6-CC1	—	1-592614-6
M81714/6-CC2	—	1-592614-2
M81714/6-CD1	—	1-592614-0
M81714/6-CE1	—	592614-8
M81714/6-CJ1	—	592614-2
(Class C) Size 20		
M81714/7-CA1	—	592610-6
M81714/7-CB1	—	592610-4
M81714/7-CB2	—	1-592610-5
M81714/7-CB3	—	1-592610-9
M81714/7-CC1	—	1-592610-7
M81714/7-CC2	—	1-592610-3
M81714/7-CD1	—	1-592610-1
M81714/7-CE1	—	592610-8
M81714/7-CJ1	—	592610-2
(Class C) Size 16		
M81714/8-CA1	—	592606-8
M81714/8-CB1	—	592606-6
M81714/8-CB2	—	1-592606-2
M81714/8-CC1	—	1-592606-4
M81714/8-CC2	—	1-592606-0
M81714/8-CD1	—	592606-4
M81714/8-CH1	—	592606-2
(Class C) Size 12		
M81714/9-CA1	—	592602-8
M81714/9-CB1	—	592602-6
M81714/9-CB2	—	1-592602-2
M81714/9-CC1	—	1-592602-4
M81714/9-CC2	—	1-592602-0
M81714/9-CD1	—	592602-4
M81714/9-CH1	—	592602-2

Catalog 1308940
Revised 9-14

www.te.com

Dimensions are shown for reference purposes only. Specifications subject to change.

Dimensions are in millimeters unless otherwise specified.

USA: +1 800 522 6752
Asia Pacific: +86 0 400 820 6015
UK: +44 800 267 666

For additional support numbers please visit www.te.com

Engineering Notes

Catalog 1308940
Revised 9-14

www.te.com

Dimensions are shown for reference purposes only. Specifications subject to change.

Dimensions are in millimeters unless otherwise specified.

USA: +1 800 522 6752
Asia Pacific: +86 0 400 820 6015
UK: +44 800 267 666

For additional support numbers please visit www.te.com

Table of Contents

Introduction . . . . . .9-2 to 9-4

LGH Lead Assemblies and Receptacles

5 KVDC, LGH ¼ 9-4
10 KVDC, LGH ½ . . . . . .9-5 to 9-8
15 KVDC, LGH ½ L . . . . . .9-9 to 9-11
20 KVDC, LGH 1 . . . . . .9-12 to 9-15
25 KVDC, LGH 1 L . . . . . .9-16 to 9-18
30 KVDC, LGH 2 . . . . . .9-19, 9-20
40 KVDC, LGH 3 . . . . . .9-21 to 9-23
50 KVDC, LGH 4 . . . . . .9-24 to 9-26

Commercial Single Line Connectors

Introduction 9-27
10 KVDC 9-28
20 KVDC 9-29
30 KVDC 9-30

Two-Position Connectors, 10 KVDC . . . . . .9-31 to 9-33

Multi-Pin Circular Commercial Connectors, 27 KVDC 9-34, 9-35

Multi-Line High Voltage Connectors 9-36

5-Pin, Metal-Shell Circular Connectors, Military-Type 9-37, 9-38

7-Pin, Metal-Shell Circular Connectors, Military-Type 9-39, 9-40

6-Pin, Subminiature Rectangular Connectors . . . . . .9-41 to 9-45

LGH Micro-Miniature Connectors and Cable Assemblies . . . . . .9-46 to 9-48

Medical Receptacles (Used Primarily for Patient Monitoring) 9-49, 9-50

Various Specials

6 Position LGH Connector 9-51, 9-52
3 Position LGH Compact Flange Mounted Connector 9-51, 9-53
Printed Circuit Board Receptacles 9-54
Multiple Receptacle with Integral, Molded Flange for Bulkhead Applications (Gold Pins) 9-54
CRT Lead Assemblies 9-55, 9-56
CRT-Base Connectors 9-57, 9-58
Rack and Panel Connectors 9-59, 9-60
Heavy Duty (VRL) RFI-Shielded Lead Assemblies and Receptacles 9-61
Field Installable Connectors 9-62

Accessories 9-63

LGH Product Worksheet for Ordering Custom Designs 9-64

Catalog 1308940
Revised 9-14

www.te.com

Dimensions are shown for reference purposes only. Specifications subject to change.

Dimensions are in millimeters unless otherwise specified.

USA: +1 800 522 6752
Asia Pacific: +86 0 400 820 6015
UK: +44 800 267 666

For additional support numbers please visit www.te.com

Introduction

Product Facts

- **No exposed high voltage parts**
- **Space saving — maximum performance from small size and weight**
- **Fast connect and disconnect**
- **Wide temperature range — -67°F to +257°F [-55°C to +125°C], continuous**
- **Positive mating of lead into receptacle**
- **Hermetically sealed**
- **RFI shielding — optional**
- **Fungus, moisture, oil, and chemical resistant**
- **High altitude operation — at any altitude without voltage derating**
- **Excellent mechanical strength — resists vibration and shock**
- **High dielectric strength**
- **Preassembled — no tools required**
- **High reliability — operates under extreme environmental conditions**
- **Unaffected by ultra-violet light**
- **Corona resistant — virtually unaffected by ozone or corona**
- **Radiation resistant**
- **Lead wire remains flexible to -67°F [-55°C]**
- **Non-toxic insulation — does not give off toxic fumes when burned**
- **Excellent shelf life**
- **Meets applicable military specifications**
- **Color coded for easy identification**
- **Quick, easy installation**

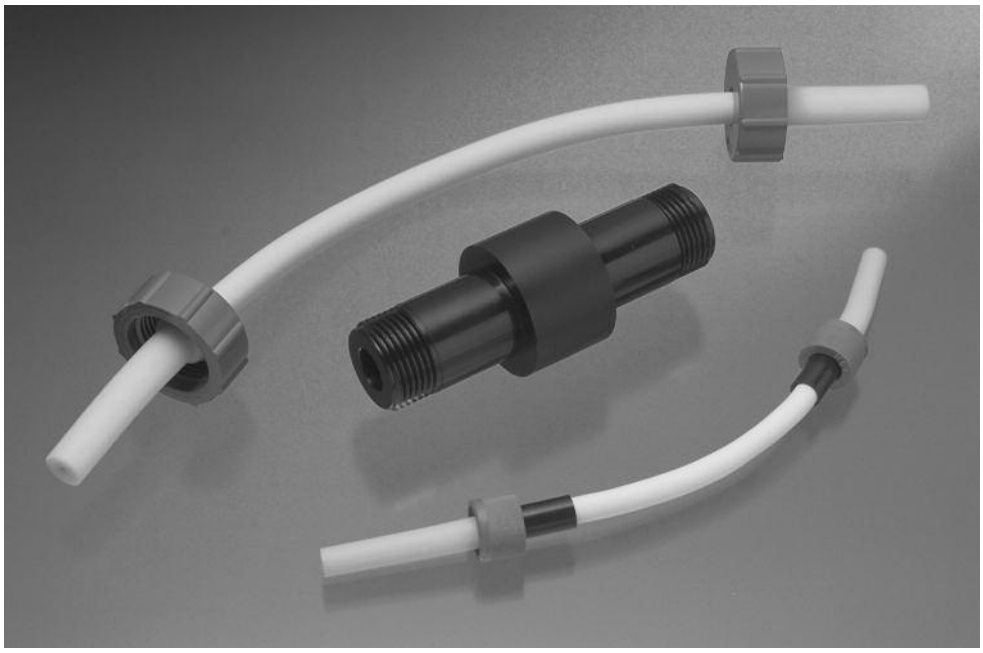

The development of high voltage hermetically sealed connectors and LGH High Voltage Lead Assemblies and Receptacles represented two major advances in the science of high voltage application — both pioneered by TE Connectivity. As a result of this technological advantage, TE is the leading manufacturer of high voltage, high altitude, high temperature lead assemblies and connectors.

In the field of high voltage application, TE has conducted extensive research, development, quality studies and reliability programs yielding numerous standard products for military and industrial high voltage applications.

LGH High Voltage Lead Assemblies and Receptacles are used in many systems' designed to meet or exceed military specifications. A sampling of specifications to which samples of these products have been tested, is listed to the right.

For more information contact TE.

LGH Test Methods and Conditions

LGH Leads and Receptacles, LGH ¼ through LGH 4

Product Spec. — 108-36033

EIA RS-364

Electrical

Dielectric Withstanding Voltage — EIA-364-20 Condition I (MS202, Method 301)

Insulation Resistance — EIA-364-21, (MS202, Method 302)

Mechanical

Vibration, Sinusoidal — EIA-364-28, Test Condition I, (MS202, Method 201)

Shock — EIA-364-27, Method H

Environmental

Barometric Pressure — Sea Level to 70,000 feet, MIL-Std-202, Method 105, Condition C

Thermal Shock — EIA-364-32, 5 cycles -67°F to +257°F [-55°C to +125°C]

Dimensions are shown for reference purposes only. Specifications subject to change.

Dimensions are in millimeters unless otherwise specified.

USA: +1 800 522 6752
Asia Pacific: +86 0 400 820 6015
UK: +44 800 267 666

For additional support numbers please visit www.te.com

Introduction (Continued)

Lead Assemblies and Receptacles

LGH leads and receptacles find wide application where high voltage is used in harsh environments. LGH leads and receptacles are lightweight, miniature, extremely reliable and they maintain peak performance under high temperature, high altitude applications. They are equally applicable to low temperature, low altitude devices.

Leads and receptacles shown on the following pages are commonly used items. Hundreds of variations of these products are available, as well as custom-made units. Consult TE Connectivity for information on high voltage connectors for applications not satisfied by components listed here.

When ordering LGH items: identify item, list TE part number, and specify quantity. Note: Special packaging, special marking and/or special testing of LGH leads and receptacles are available on request, as well as custom-made assemblies. Consult TE for details.

Voltage Ratings

The voltage ratings tabulated here and noted elsewhere apply to LGH molded-end lead assemblies properly mated with appropriate LGH receptacles, which are properly potted or otherwise protected on the back end.

LGH Series	Mating Length/Depth	Normal Capacitance pF/ft.	Normal Capacitance pF/m	Wire Size	Operating Voltage* Kilovolts DC	3 Min. Hipot** Kilovolts DC
LGH ¼	**.25** [6.35]	***	—	22 AWG	5	7.5
LGH ½	**.53** [13.46]	55	180	16 AWG	10	15
LGH ½ L	**.89** [22.61]	55	180	16 AWG	15	23
LGH 1	**.88** [22.35]	35	115	16 AWG	20	30
LGH 1L	**1.69** [42.93]	35	115	16 AWG	25	38
LGH 2	**1.44** [36.58]	28	144	16 AWG	30	45
LGH 3	**1.81** [45.97]	35	115	16 AWG	40	55
LGH 4	**2.00** [50.80]	28	144	16 AWG	50	60

*Sea level to 70,000 ft. [21,336 m], -55°C to +125°C [-67°F to +257°F].
**Sea level at 25°C (77°F).
***LGH ¼ is not shielded

LGH Lead Assemblies are manufactured with a silicone rubber end having a specified mating length (see above table) molded onto a 16 AWG white silicone rubber wire. These assemblies provide extreme reliability and safety for high voltage applications in severe environments.

Specifications

Lead Length Tolerance (including pigtail) — Lengths to 24 [609.6], ±.125 [3.28]: 24 [609.6] and longer, ±1% of length.

Lead Insulation — Silicone rubber, durometer reading 60 to 70 (reference MIL-W-16878/8, Type FF); color, white. Lead assemblies with other colors and insulation materials such as PVC and PTFE can be manufactured on request.

Conductors (per MIL-W-16878/8) — LGH ½, LGH ½ L, LGH 1, LGH 1L and LGH 3 lead assemblies contain 41 strands minimum of 32 AWG [0.03 mm²] wire, silver plated, to compose a 16 AWG [1.25 mm²] stranded conductor .06 nominal O.D. [1.5]; LGH 2 and LGH 4 lead assemblies contain 19 strands minimum of 29 AWG [0.07 mm²] wire, silver plated, to compose a 16 AWG [1.25 mm²] stranded conductor .06 nominal O.D. [1.5]. Silver plating is per ASTM-B298-58T.

Pigtail — Solder dipped

Socket — Bronze per ASTM-140, alloy B, gold plated per MIL-G-45204, Type II, (0.000030 [0.00076] gold over 0.000030 [0.00076] nickel per QQ-N-290). Socket is crimped to lead wire.

Cap Materials — Polycarbonate glass-filled polyester or glass-filled epoxy.

Molded End — Silicone rubber per ZZ-R-765, Class IIa and IIb, grade 60.

Positive Stop Ferrule — Glass-filled polyester

Marking — Per MIL-STD-130

Washer — TFE, electrical grade

Minimum Bend Radii, nominal, for cables without additional covering over silicone insulation and for shielded cable.

LGH Series	Insulation Type Standard	Insulation Type Shielded
¼, ½, ½ L	**.25** 6.4	**.75** 19.0
1, 1L, 3	**.50** 12.7	**1.00** 25.4
2, 4	**1.00** 25.4	**1.50** 38.1

Maximum Conductor Resistance

All Series	4.75 ohms/1000 ft. 15.6 ohms/1000m.

LGH ¼ — 22 AWG (19/34)

Single End Lead Assembly

Single End Lead Assembly with Positive Stop Ferrule

Shielded Lead Assembly

RFI Shielded Lead Assembly

Catalog 1308940
Revised 9-14

www.te.com

Dimensions are shown for reference purposes only. Specifications subject to change.

Dimensions are in millimeters unless otherwise specified.

USA: +1 800 522 6752
Asia Pacific: +86 0 400 820 6015
UK: +44 800 267 666

For additional support numbers please visit www.te.com

Introduction (Continued)

LGH Receptacles are manufactured in molded glass epoxy having a specified mating depth (see table on previous page). When used with LGH lead assemblies they offer the ultimate in dependability, even under harsh environmental conditions. Typical receptacles are shown here. Specific units, with part numbers, are shown by series in the following pages.

Specifications (All units)

Pin Assembly — Brass per ASTM-B-16 and QQ-B-626; tin plated per MIL-T-10727, Type I or II, .00010" min. thickness.*

Body — Molded glass-filled epoxy

Marking — Per MIL-STD-130

(Canned units only)

Solder Flange — Brass per ASTM-B-16 and QQ-B-626; tin plated per MIL-T-10727, Type I or II, .00010" min. thickness

Hermeticity — Leak rate less than 1 x 10^{-8} cc He/sec. per MIL-STD-202, Method 112B, Cond. C.

*Hermetically sealed receptacles are plated after molding therefore we cannot guarantee the minimum thickness of copper under plating .000100 [0.00254] on the mating end of the pin contact.

LGH Receptacles for Canned Units

These receptacles are for hermetically sealed, gas- or oil-filled units, and they are recommended for canned units filled with potting compound.**

**CAUTION: Follow manufacturer's instructions on preparing and handling potting. LGH voltage ratings apply only when a proper bond is achieved between the back end of the receptacle and the compound.

LGH Receptacles for Cast or Encapsulated Units

These units are for use where no metal can is required.

Glass-epoxy receptacle for encapsulated units

Glass-epoxy receptacle for splice application

Hermetically sealed, glass-epoxy receptacle for canned units

Glass-epoxy, flanged receptacle for bulkhead splice applications

Glass-epoxy, flanged receptacle for bulkhead applications

LGH Lead Assemblies and Receptacles, 5 KVDC, LGH ¼

Single End Lead Assemblies

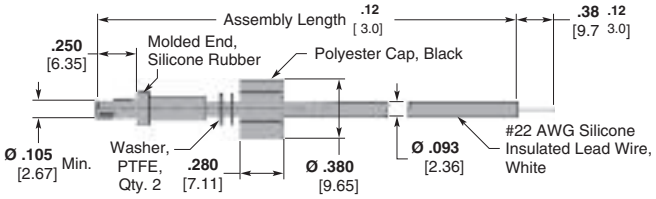

Part Number 445162

Assembly Length	Part Number
6.0 152.4	445162-1
12.0 304.8	445162-2 5-445162-2*
18.0 457.2	445162-3
24.0 609.6	445162-4

*RoHS compliant Part Number.

Receptacle, Metal Flange

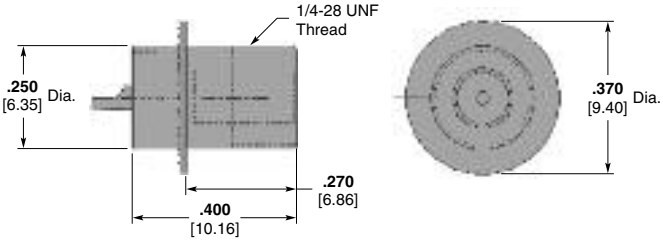

Part Number 445159-1 and Part Number 5-445159-1 (RoHS)

Catalog 1308940
Revised 9-14

www.te.com

Dimensions are shown for reference purposes only. Specifications subject to change.

Dimensions are in millimeters unless otherwise specified.

USA: +1 800 522 6752
Asia Pacific: +86 0 400 820 6015
UK: +44 800 267 666

For additional support numbers please visit www.te.com

LGH Lead Assemblies and Receptacles, 10 KVDC, LGH ½ (Continued)

Double End Lead Assemblies with Positive Stop Ferrules with PTFE Wire

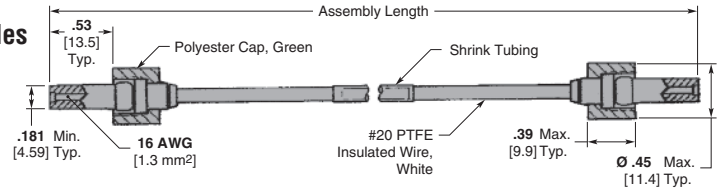

Part Number 860529

Assembly Length	Part Number
6.0 152.4	860529-2
7.0 177.8	860529-6
10.0 254.0	860529-8
13.0 330.2	1-860529-0
16.0 406.4	860529-4

Double End Lead Assemblies with Positive Stop Ferrules with #22 Wire

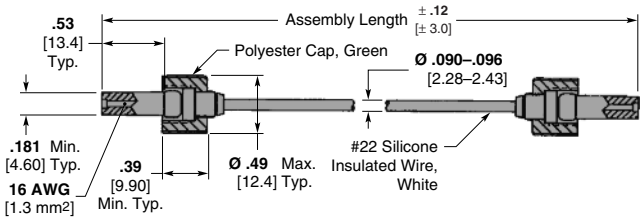

Part Number 449578

Assembly Length	Part Number
11.0 ± .12 279.4 ± 3.0	449578-1

Shielded Single End Lead Assemblies with Ground Lead

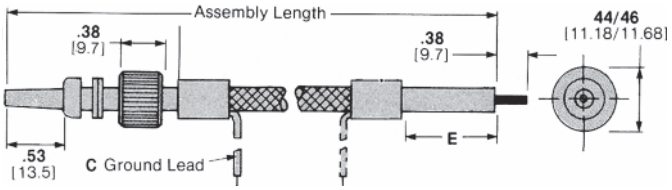

Part Number 846985

Assembly Length	Dims. C	Dims. E	Part Number
12.0 304.8	**6.0** 152.4	**2.0** 50.8	846985-9 5-846985-9*
18.0 457.2	**6.0** 152.4	**1.5** 38.1	2-846985-2
24.0 609.6	**6.0** 152.4	**1.5** 38.1	2-846985-3
36.0 914.4	**12.0** 304.8	**2.0** 50.8	1-846985-8

*RoHS compliant Part Number.

Shielded Double End Lead Assemblies with Ground Lead

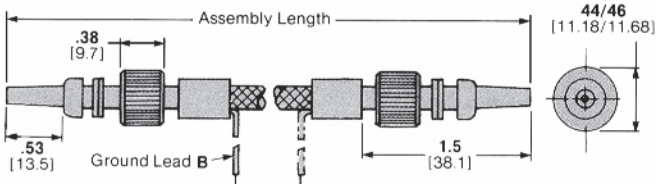

Part Number 858885

Assembly Length	Dim. B	Part Number
12.0 304.8	**8.0** 203.2	858885-3
18.0 457.2	**6.0** 152.4	2-858885-7
24.0 609.6	**8.0** 203.2	858885-4
36.0 914.4	**6.0** 152.4	2-858885-5 7-858885-5*
48.0 1219.2	**6.0** 152.4	858885-6

*RoHS compliant Part Number.

LGH Lead Assemblies and Receptacles, 10 KVDC, LGH ½ (Continued)

Double End Lead Assemblies with Positive Stop Ferrules with PTFE Wire

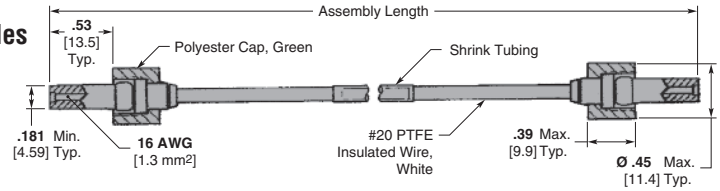

Part Number 860529

Assembly Length	Part Number
6.0 152.4	860529-2
7.0 177.8	860529-6
10.0 254.0	860529-8
13.0 330.2	1-860529-0
16.0 406.4	860529-4

Double End Lead Assemblies with Positive Stop Ferrules with #22 Wire

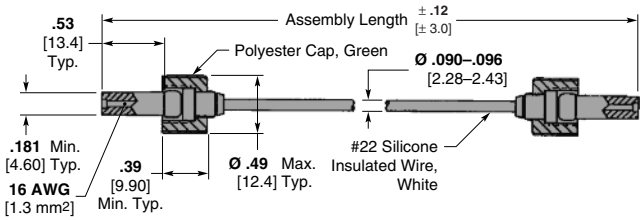

Part Number 449578

Assembly Length	Part Number
11.0 ± .12 279.4 ± 3.0	449578-1

Shielded Single End Lead Assemblies with Ground Lead

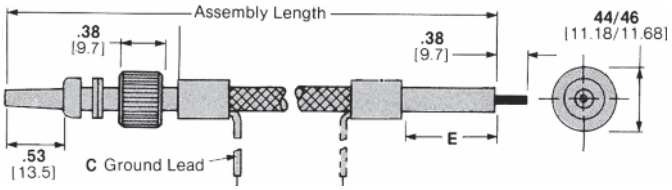

Part Number 846985

Assembly Length	Dims. C	Dims. E	Part Number
12.0 304.8	**6.0** 152.4	**2.0** 50.8	846985-9 5-846985-9*
18.0 457.2	**6.0** 152.4	**1.5** 38.1	2-846985-2
24.0 609.6	**6.0** 152.4	**1.5** 38.1	2-846985-3
36.0 914.4	**12.0** 304.8	**2.0** 50.8	1-846985-8

*RoHS compliant Part Number.

Shielded Double End Lead Assemblies with Ground Lead

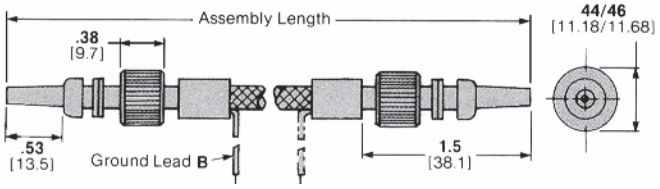

Part Number 858885

Assembly Length	Dim. B	Part Number
12.0 304.8	**8.0** 203.2	858885-3
18.0 457.2	**6.0** 152.4	2-858885-7
24.0 609.6	**8.0** 203.2	858885-4
36.0 914.4	**6.0** 152.4	2-858885-5 7-858885-5*
48.0 1219.2	**6.0** 152.4	858885-6

*RoHS compliant Part Number.

LGH Lead Assemblies and Receptacles, 10 KVDC, LGH ½ (Continued)

RFI Shielded Single End Lead Assemblies*

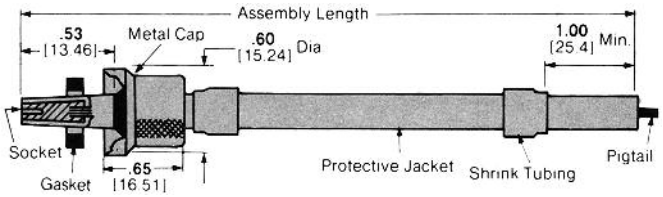

Part Number 861807

Assembly Length	Part Number
12.0 304.8	861807-1
18.0 457.2	861807-2
24.0 609.6	861807-7
36.0 914.4	861807-9

RFI Shielded Double End Lead Assemblies*

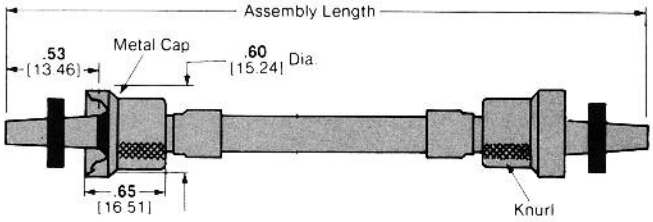

Part Number 861808

Assembly Length	Part Number
12.0 304.8	861808-1
18.0 457.2	861808-9
24.0 609.6	1-861808-0
36.0 914.4	1-861808-2
48.0 1219.2	1-861808-6

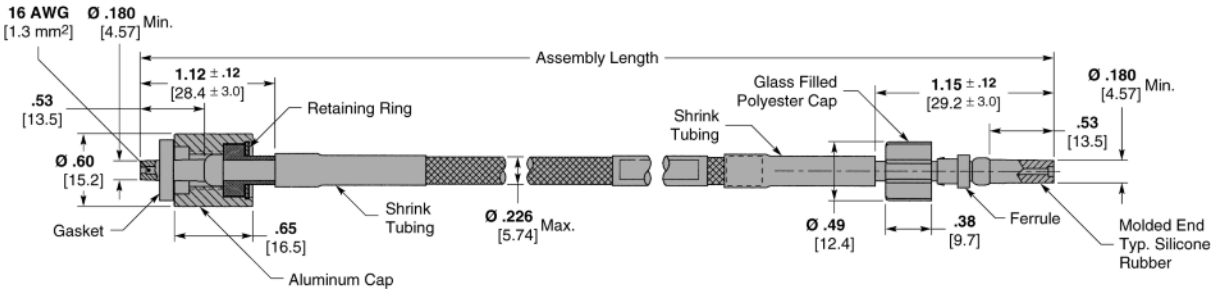

Part Number 863330-1

Assembly Length	Part Number
18.0 457.2	863330-1

* These RFI Shielded Lead Assemblies mate with Receptacle Part Number 861252-1.

Catalog 1308940
Revised 9-14

www.te.com

Dimensions are shown for reference purposes only. Specifications subject to change.

Dimensions are in millimeters unless otherwise specified.

USA: +1 800 522 6752
Asia Pacific: +86 0 400 820 6015
UK: +44 800 267 666

For additional support numbers please visit www.te.com

LGH Lead Assemblies and Receptacles, 10 KVDC, LGH ½ (Continued)

Glass-Epoxy Receptacles with .53 [13.46] Barrel Depth

Flanged, for Hermetic Seal
Part Number 861252-1
RoHS Part Number 5-861252-1
Weight — 2 grams

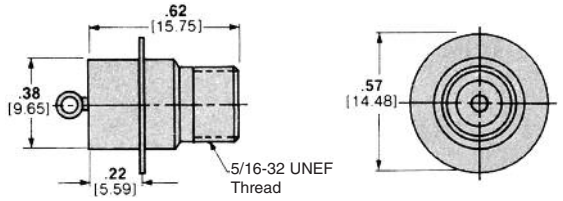

Special Receptacle
Part Number 448462-1

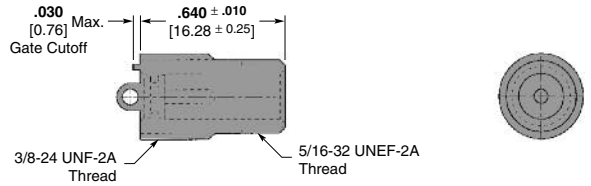

Note: Receptacle will accept a LGH ½ lead with a .53 [13.5] molded end length.

Flanged, Bolt Mount
Part Number 830395-1
RoHS Part Number 5-830395-1
Weight — 4.2 grams

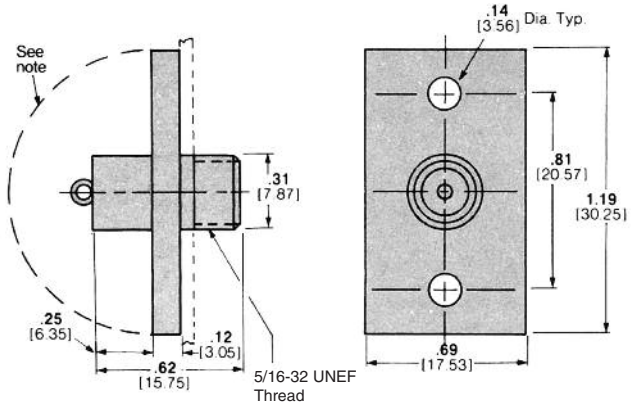

Receptacle
Part Number 830200-1
RoHS Part Number 5-830200-1

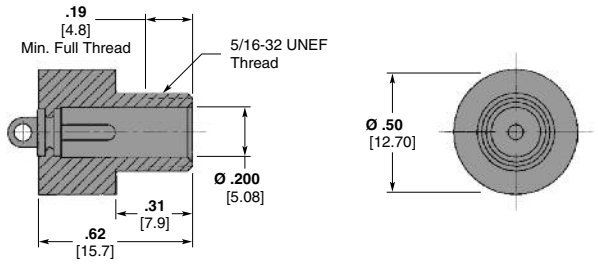

Note: Receptacle to mate with LGH ½ Lead Assembly.

For Encapsulated Units
Part Number 830178-1
RoHS Part Number 5-830178-1
Weight — 1.2 grams

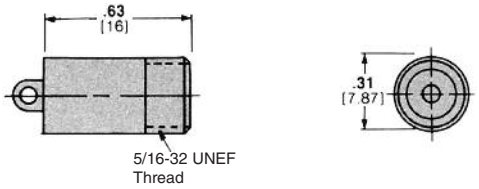

Receptacles are available with gold plated contacts.

Bolt-mount, Feed-through
Part Number 830174-1
Weight — 5.8 grams

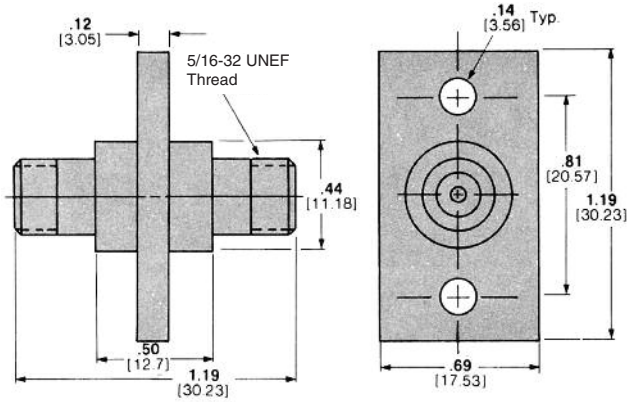

Splice
Part Number 830177-1
Weight — 3.5 grams

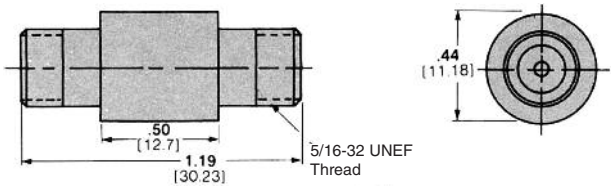

T Connector
Part Number 849418-1
Weight — 15 grams

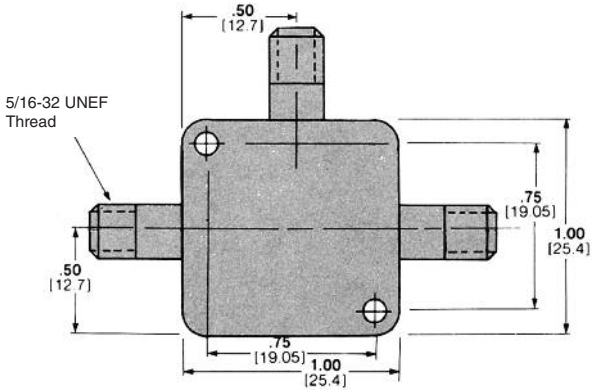

LGH Lead Assemblies and Receptacles, 15 KVDC, LGH ½ L

Single End Lead Assemblies

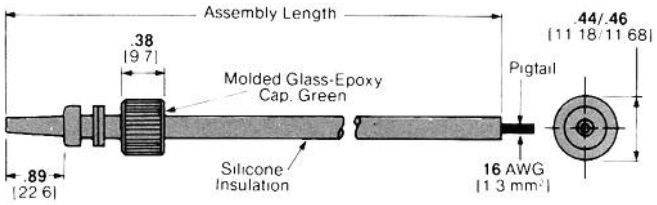

Part Number 830613

Assembly Length	Part Number
6.0 152.4	1-830613-0
12.0 304.8	830613-2 5830613-2*
18.0 457.2	1-830613-2 1-5830613-2*
24.0 609.6	830613-1 5830613-1*
36.0 914.4	830613-7 5830613-7*
48.0 1219.2	1-830613-4 1-5830613-4*

RoHS compliant Part Number.

Double End Lead Assemblies

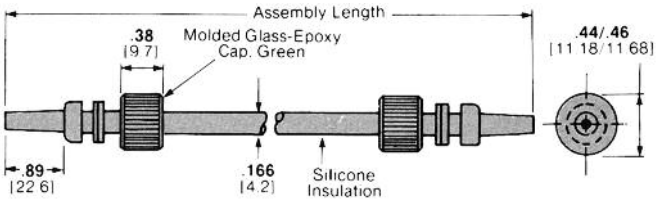

Part Number 830614

Assembly Length	Part Number
6.0 152.4	1-830614-5
12.0 304.8	830614-2
18.0 457.2	830614-3
24.0 609.6	830614-1
36.0 914.4	1-830614-6
48.0 1219.2	2-830614-5

Single End Lead Assemblies with Positive Stop Ferrules

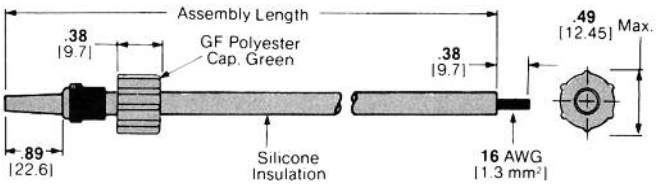

Part Number 862547

Assembly Length	Part Number
6.0 152.4	862547-1
12.0 304.8	862547-4 5-862547-4*
18.0 457.2	862547-6 5-862547-6*
24.0 609.6	862547-8
36.0 914.4	862547-9
48.0 1219.2	1-862547-9 6-862547-9*

RoHS compliant Part Number.

Double End Lead Assemblies with Positive Stop Ferrules

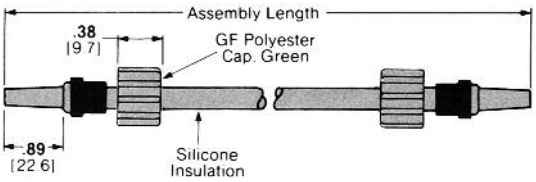

Part Number 862548

Assembly Length	Part Number
6.0 152.4	862548-1
12.0 304.8	862548-4
18.0 457.2	862548-6
24.0 609.6	862548-8
36.0 914.4	1-862548-6
48.0 1219.2	1-862548-4

Catalog 1308940
Revised 9-14

www.te.com

Dimensions are shown for reference purposes only. Specifications subject to change.

Dimensions are in millimeters unless otherwise specified.

USA: +1 800 522 6752
Asia Pacific: +86 0 400 820 6015
UK: +44 800 267 666

For additional support numbers please visit www.te.com

LGH Lead Assemblies and Receptacles, 15 KVDC, LGH ½ L (Continued)

Shielded Single End Lead Assemblies

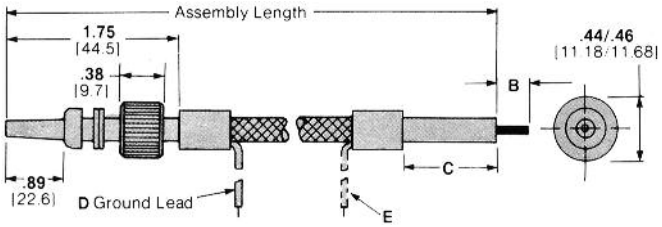

Part Number 858886

Assembly Length	Terminated End: Ground Lead Length(s) D & E	Pigtail End: C	Pigtail End: Pigtail Length B	Part Number	RoHS Part Number
12.0 304.8	**8.0** 203.2†	**1.5** 38.1	**.25** 6.4	858886-2	5-858886-2
18.0 457.2	**8.0** 203.2	**3.0** 76.2	**.38** 9.7	1-858886-4	—
24.0 609.6	**12.0** 304.8	**3.0** 76.2	**.38** 9.7	1-858886-8	—
36.0 914.4	**12.0** 304.8*	**6.0** 152.4	**.38** 9.7	858886-1	—
	8.0 203.2†	**3.0** 76.2	**.38** 9.7	858886-6	—

*One ground lead, pigtail end only.
†One ground lead, terminated end only.

Shielded Double End Lead Assemblies

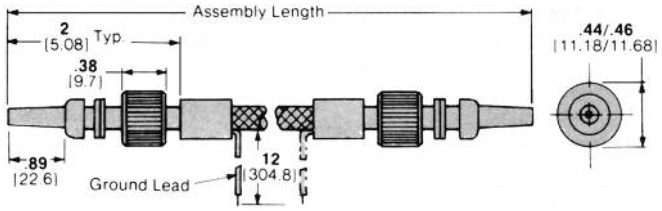

Part Number 858945

Assembly Length	Part Number
12.0 304.8	1-858945-6
18.0 457.2	1-858945-5*
24.0 609.6	2-858945-1
36.0 914.4	858945-3
48.0 1219.2	1-858945-4

*Two ground leads, 12.0 [304.8] each.

RFI Shielded Single End Lead Assemblies*

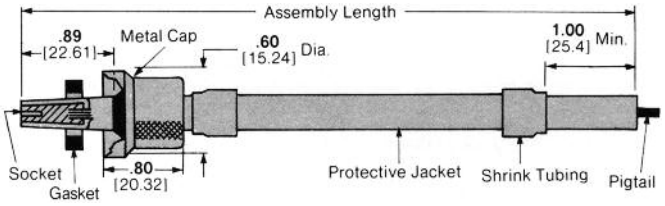

Part Number 861809

Assembly Length	Part Number
12.0 304.8	861809-1
18.0 457.2	861809-4
24.0 609.6	861809-5
36.0 914.4	861809-6

RFI Shielded Double End Lead Assemblies*

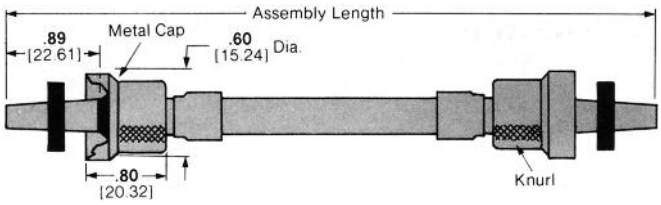

Part Number 861810

Assembly Length	Part Number
12.0 304.8	861810-1
18.0 457.2	861810-6
24.0 609.6	861810-7
36.0 914.4	861810-9

* These RFI Shielded Lead Assemblies mate with Receptacle Part Number 861253-1.

Dimensions are shown for reference purposes only. Specifications subject to change.

Dimensions are in millimeters unless otherwise specified.

USA: +1 800 522 6752
Asia Pacific: +86 0 400 820 6015
UK: +44 800 267 666

For additional support numbers please visit www.te.com

LGH Lead Assemblies and Receptacles, 15 KVDC, LGH ½ L (Continued)

Glass-Epoxy Receptacles with .89 [22.61] Barrel Depth

Flanged, For Hermetic Seal
Part Number 861253-1
RoHS Part Number 5-861253-1
Weight — 3 grams

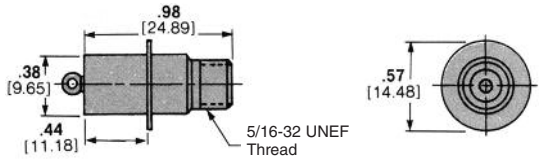

Flanged, Bolt Mount
Part Number 858857-1
RoHS Part Number 5-858857-1
Weight — 6 grams

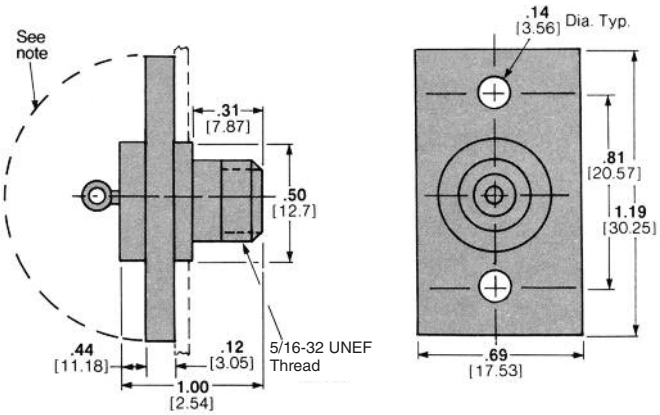

Note: If the panel or mounting hardware is at ground potential, guard against arc-over and breakdown within the area defined by this line.

Special Receptacle
Part Number 448464-1

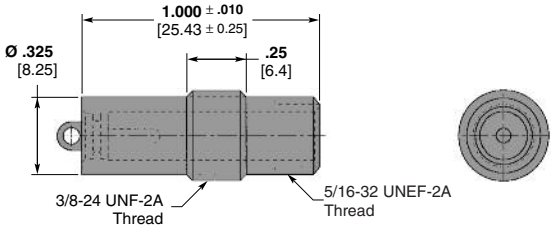

Note: Receptacle will accept a LGH ½ L lead with a .89 [22.6] molded end length.

For Encapsulated Units
Part Number 858855-1
RoHS Part Number 5-858855-1
Weight — 3 grams

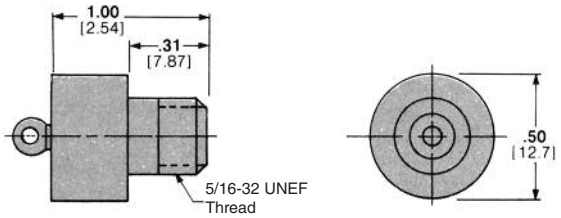

Receptacles are available with gold plated contacts.

Bolt-Mount, Feed-Through
Part Number 858856-1
Weight — 14 grams

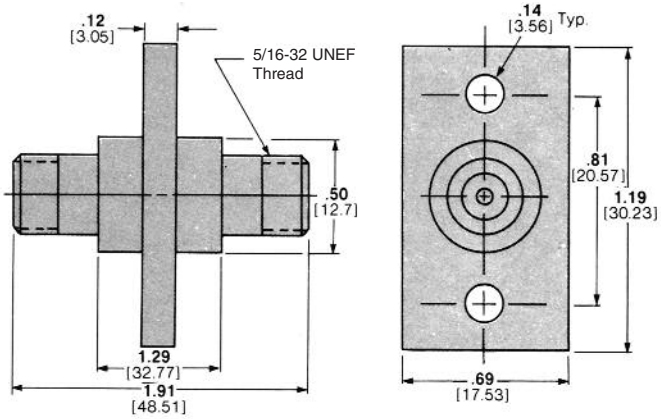

Splice
Part Number 858082-1
Weight — 10.5 grams

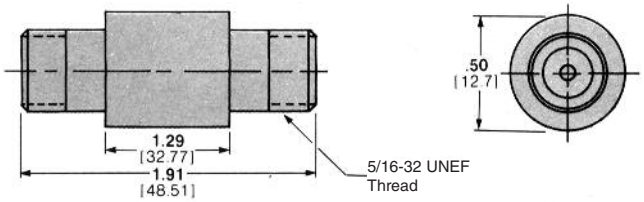

T Connector
Part Number 850736-1
RoHS Part Number 5-850736-1
Weight — 23 grams

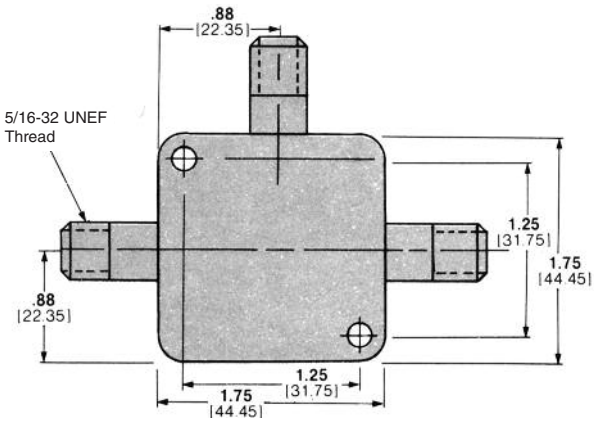

Catalog 1308940
Revised 9-14

www.te.com

Dimensions are shown for reference purposes only. Specifications subject to change.

Dimensions are in millimeters unless otherwise specified.

USA: +1 800 522 6752
Asia Pacific: +86 0 400 820 6015
UK: +44 800 267 666

For additional support numbers please visit www.te.com

LGH Lead Assemblies and Receptacles, 20 KVDC, LGH 1

Single End Lead Assemblies

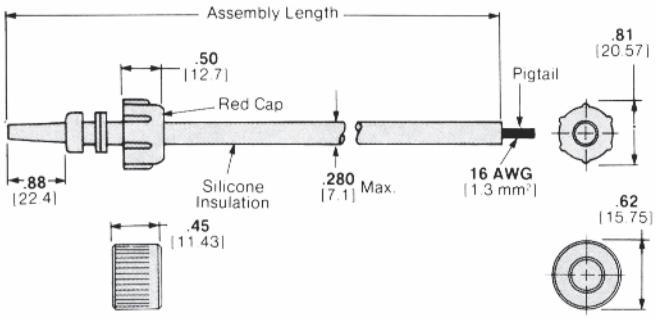

Part Number 837655 and 863701

Shielded Single End Lead Assemblies

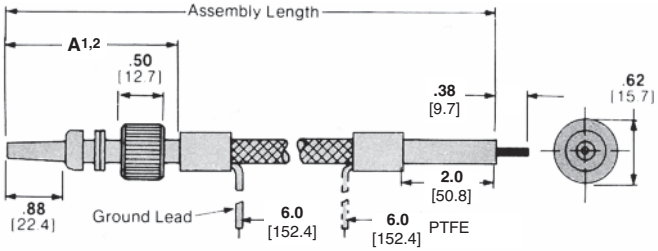

Part Number 849099

Double End Lead Assemblies

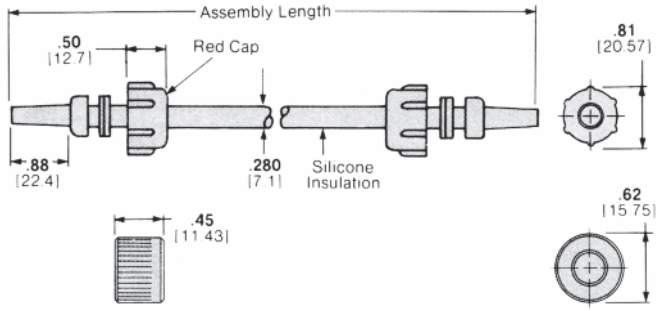

Part Number 830126 and 863702

Shielded Double End Lead Assemblies

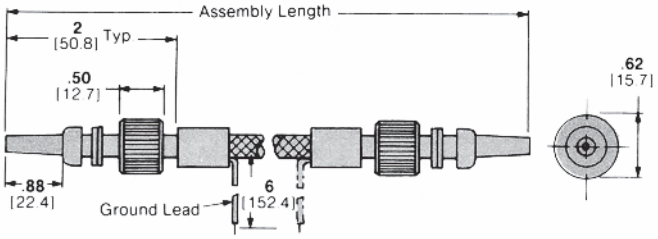

Part Number 849104

Single End Lead Assemblies with Positive Stop Ferrules

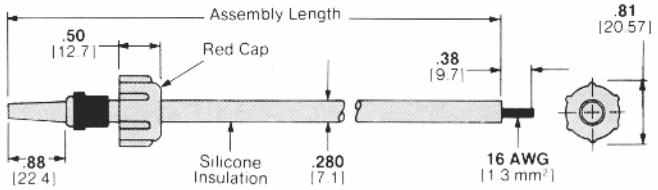

Part Number 862549 and 863703

RFI Shielded Single End Lead Assemblies*

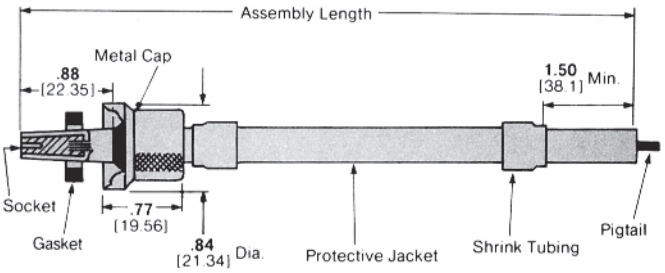

Part Number 861811

Double End Lead Assemblies with Positive Stop Ferrules

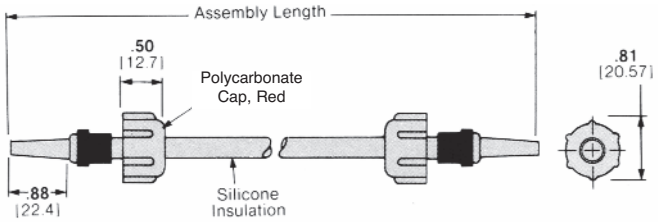

Part Number 862550

RFI Shielded Double End Lead Assemblies*

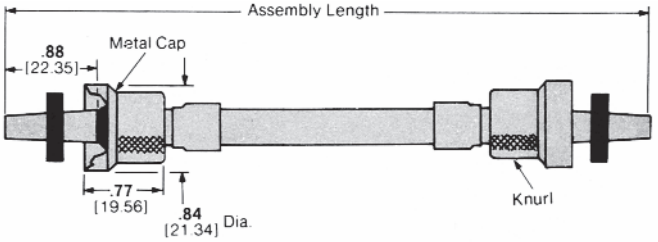

Part Number 861812

* These RFI Shielded Lead Assemblies mate with Receptacle Part Number 861254-1.

Catalog 1308940
Revised 9-14

www.te.com

Dimensions are shown for reference purposes only. Specifications subject to change.

Dimensions are in millimeters unless otherwise specified.

USA: +1 800 522 6752
Asia Pacific: +86 0 400 820 6015
UK: +44 800 267 666

For additional support numbers please visit www.te.com

LGH Lead Assemblies and Receptacles, 20 KVDC, LGH 1 (Continued)

Lead Assemblies (Continued)

Description	Assembly Length	Part Numbers						
		Polycarbonate Cap		Glass-Filled Polyester Cap		Glass Epoxy Cap		Metal Cap
		Non-RoHS	RoHS	Non-RoHS	RoHS	Non-RoHS	RoHS	Non-RoHS
Single End Lead Assemblies	**6** 152.4	837655-7	5837655-7	863701-7	—	—	—	—
	12 304.8	1-837655-1	1-5837655-1	1-863701-1	1-5863701-1	—	—	—
	18 457.2	1-837655-0	1-5837655-0	1-863701-0	—	—	—	—
	24 609.6	837655-8	—	863701-8	5863701-8	—	—	—
	36 914.4	837655-5	5837655-5	863701-5	5863701-5	—	—	—
	48 1219.2	1-837655-3	1-5837655-3	1-863701-3	1-5863701-3	—	—	—
Double End Lead Assemblies	**6** 152.4	—	—	863702-2	—	830126-2	—	—
	12 304.8	1-830126-3	—	1-863702-3	—	—	—	—
	18 457.2	1-830126-2	—	1-863702-2	—	—	—	—
	24 609.6	1-830126-6	—	1-863702-6	—	—	—	—
	36 914.4	1-830126-7	—	1-863702-7	—	—	—	—
	48 1219.2	2-830126-1	—	2-863702-1	—	—	—	—
Single End Lead Assemblies (with Positive Stop Ferrules)	**6** 152.4	862549-1	—	863703-1	—	—	—	—
	12 304.8	862549-4	5-862549-4	863703-4	—	—	—	—
	18 457.2	862549-6	—	863703-6	—	—	—	—
	24 609.6	862549-8	—	863703-8	—	—	—	—
	36 914.4	862549-9	5-862549-9	863703-9	—	—	—	—
Double End Lead Assemblies (with Positive Stop Ferrules)	**6** 152.4	862550-1	—	—	—	—	—	—
	12 304.8	862550-4	—	—	—	—	—	—
	18 457.2	862550-6	—	—	—	—	—	—
	24 609.6	862550-8	—	—	—	—	—	—
	36 914.4	862550-9	—	—	—	—	—	—
	48 1219.2	1-862550-3	—	—	—	—	—	—
Shielded Single End Lead Assemblies	**6** 152.4	—	—	—	—	849099-7[1]	—	—
	12 304.8	—	—	—	—	1-849099-2[1]	—	—
	18 457.2	—	—	—	—	849103-5[2]	5-849103-5[2]	—
	24 609.6	—	—	—	—	849099-9[1]	—	—
						849103-1†[2]	—	—
	36 914.41	—	—	—	—	849099-4[1]	—	—
	48 1219.2	—	—	—	—	1-849103-9[2]	—	—
Shielded Double End Lead Assemblies	**18** 457.2	—	—	—	—	1-849104-5	—	—
	24 609.6	—	—	—	—	849104-1	—	—
						1-849104-6*	—	—
	36 914.4	—	—	—	—	1-849104-7	6-849104-7	—
						1-849104-9*	—	—
	48 1219.2	—	—	—	—	849104-3	5-849104-3	—
RFI Shielded Single End Lead Assemblies**	**12** 304.8	—	—	—	—	—	—	861811-1
	18 457.2	—	—	—	—	—	—	861811-4
	24 609.6	—	—	—	—	—	—	861811-5
RFI Shielded Double End Lead Assemblies**	**12** 304.8	—	—	—	—	—	—	861812-1
	18 457.2	—	—	—	—	—	—	861812-4
	24 609.6	—	—	—	—	—	—	861812-3
	48 1219.2	—	—	—	—	—	—	861812-2

*Two ground leads, 6 [152.4] each.
**These RFI Shielded Lead Assemblies mate with Receptacle Part Number 861254-1.
†One ground lead, terminated end only. [1]A dim. 3.0 [76.2]. [2]A dim. 2.0 [50.8].

Dimensions are shown for reference purposes only. Specifications subject to change.

Dimensions are in millimeters unless otherwise specified.

USA: +1 800 522 6752
Asia Pacific: +86 0 400 820 6015
UK: +44 800 267 666

For additional support numbers please visit www.te.com

LGH Lead Assemblies and Receptacles, 20 KVDC, LGH 1 (Continued)

Glass-Epoxy Receptacles with .88 [22.35] Barrel Depth

Flanged, for Hermetic Seal
Part Number 861254-1
RoHS Part Number 5-861254-1
Weight — 5 grams

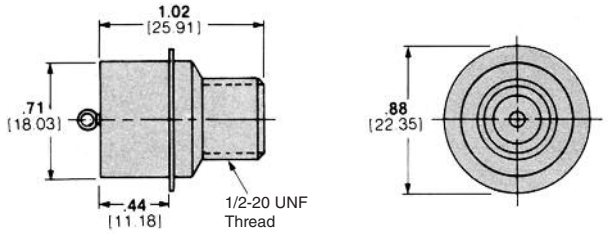

These receptacles are for use with RFI Shielded Lead Assemblies shown on the preceding page.

Bulkhead Receptacle
Part Number 449690-1
RoHS Part Number 5-449690-1

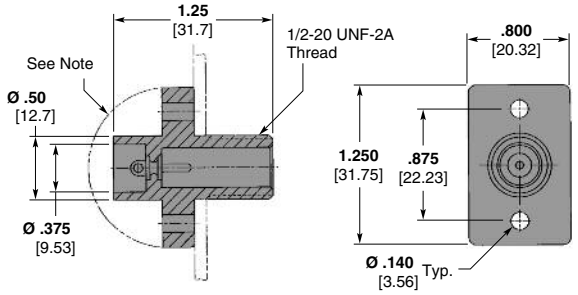

Note: Customer must protect back end against arc-over and breakdown if bulkhead and mounting hardware are metallic and at ground potential.

Flanged, Bolt Mount
Part Number 858827-1
RoHS Part Number 5-858827-1
Weight — 16 grams

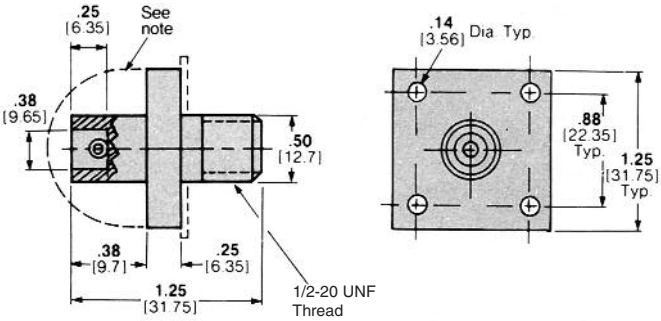

Note: If the panel or mounting hardware is at ground potential, guard against arc-over and breakdown within the area defined by this line.

Molded Receptacle
Part Number 850306-3
RoHS Part Number 5-850306-3

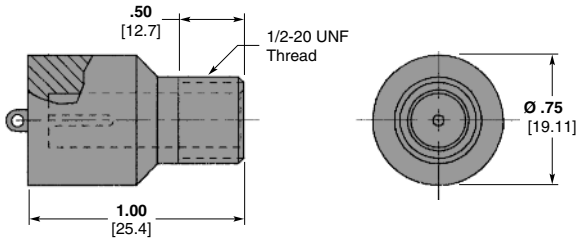

For Encapsulated Units
Part Number 834333-2
RoHS Part Number 5-834333-2
Weight — 4 grams

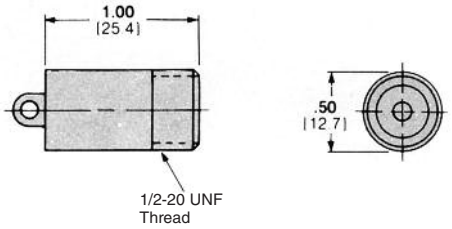

Special Receptacle
Part Number 448463-1

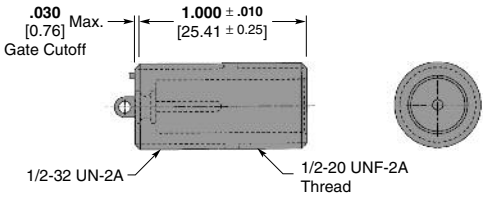

With Recessed Terminal for Encapsulated Units
Part Number 849610-3
RoHS Part Number 5-849610-3
Weight — 5 grams

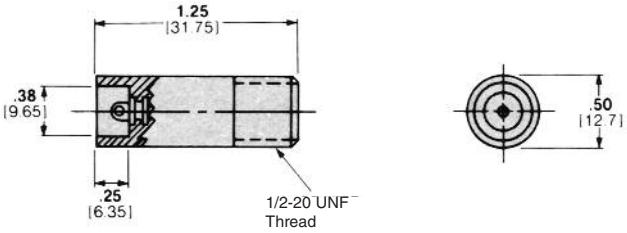

Receptacles are available with gold plated contacts.

Catalog 1308940
Revised 9-14

www.te.com

Dimensions are shown for reference purposes only. Specifications subject to change.

Dimensions are in millimeters unless otherwise specified.

USA: +1 800 522 6752
Asia Pacific: +86 0 400 820 6015
UK: +44 800 267 666

For additional support numbers please visit www.te.com

LGH Lead Assemblies and Receptacles, 20 KVDC, LGH 1 (Continued)

Glass-Epoxy Receptacles with .88 [22.35] Barrel Depth (Continued)

Bolt Mount, Feed-Through
Part Number 846793-1
Weight — 23 grams

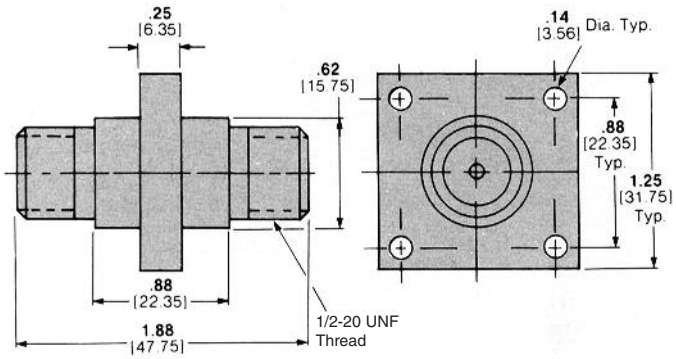

Splice
Part Number 830149-1
Weight — 10 grams

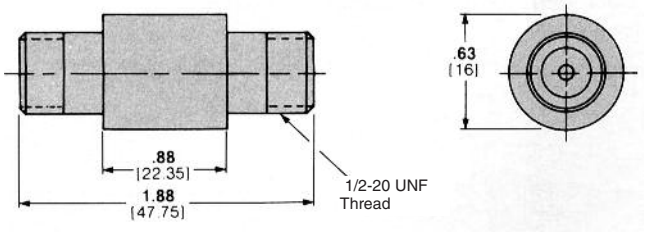

T-Shape Connector
Part Number 836674-1
RoHS Part Number 5-836674-1
Weight — 100 grams

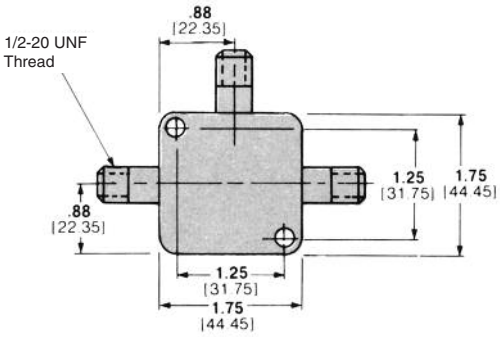

Receptacles are available with gold plated contacts.

L-Shape Receptacles with .88 [22.35] Barrel Depth

Splice
Part Number 849662-1 —
Tin Plated Pins

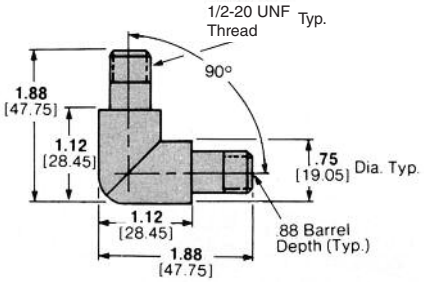

Y-Shape Receptacles with .88 [22.35] Barrel Depth

Splice
Part Number 849693-1 —
Tin Plated Pins

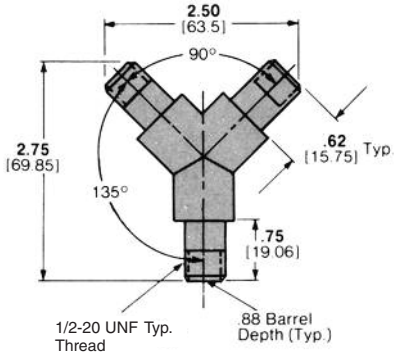

T-Shape Receptacles with .88 [22.35] Barrel Depth

Splice
Part Number 849671-1 —
Tin Plated Pins

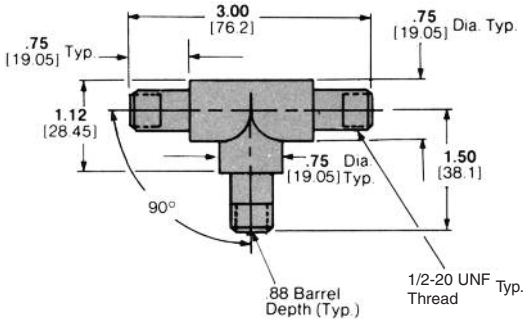

Catalog 1308940
Revised 9-14

www.te.com

Dimensions are shown for reference purposes only. Specifications subject to change.

Dimensions are in millimeters unless otherwise specified.

USA: +1 800 522 6752
Asia Pacific: +86 0 400 820 6015
UK: +44 800 267 666

For additional support numbers please visit www.te.com

LGH Lead Assemblies and Receptacles, 25 KVDC, LGH 1 L

Single End Lead Assemblies

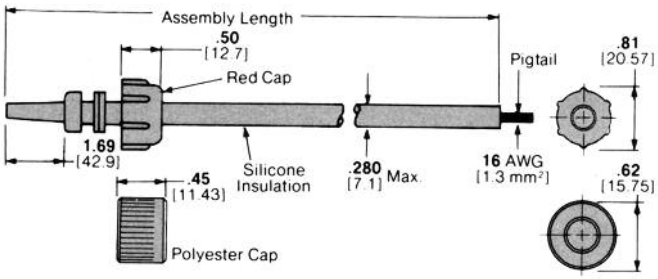

Part Number 830637

Shielded Single End Lead Assemblies

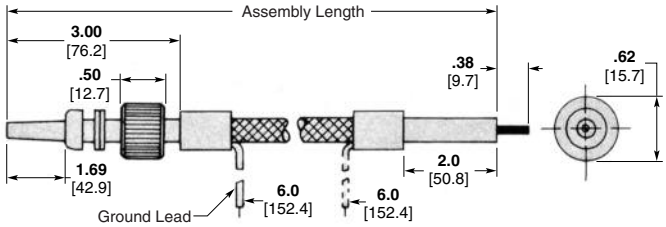

Part Number 846938

Double End Lead Assemblies

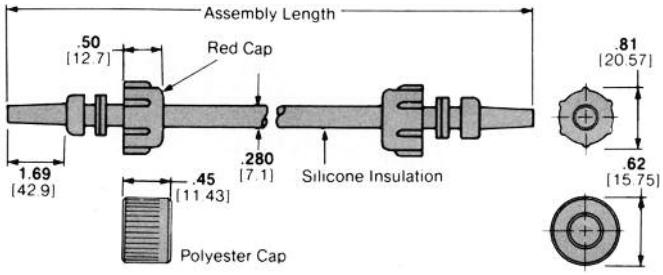

Part Number 830638

Shielded Double End Lead Assemblies

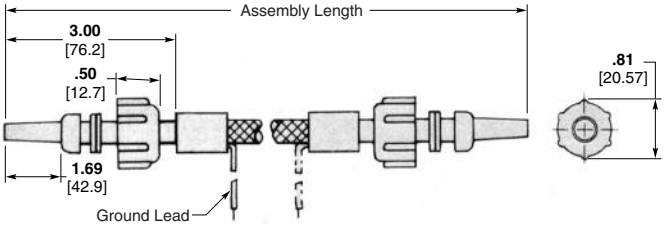

Part Number 849616

Single End Lead Assemblies with Positive Stop Ferrules

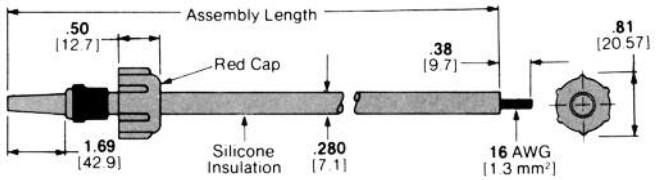

Part Number 862551

RFI Shielded Single End Lead Assemblies

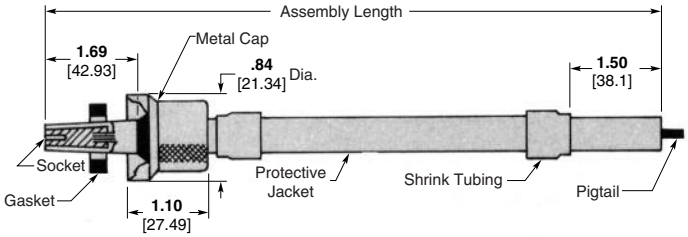

Part Number 861813

Double End Lead Assemblies with Positive Stop Ferrules

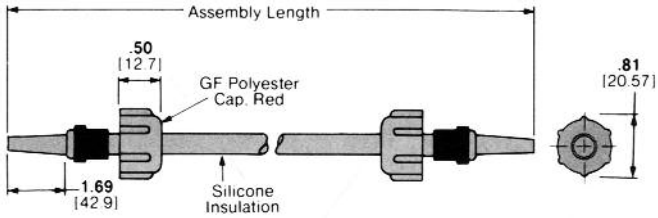

Part Number 862552

RFI Shielded Double End Lead Assemblies

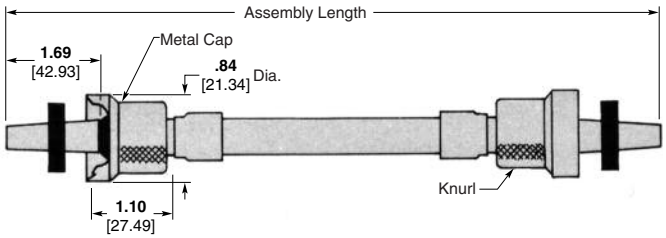

Part Number 861814

Catalog 1308940
Revised 9-14

www.te.com

Dimensions are shown for reference purposes only. Specifications subject to change.

Dimensions are in millimeters unless otherwise specified.

USA: +1 800 522 6752
Asia Pacific: +86 0 400 820 6015
UK: +44 800 267 666

For additional support numbers please visit www.te.com

LGH Lead Assemblies and Receptacles, 25 KVDC, LGH 1 L (Continued)

Lead Assemblies (Continued)

Description	Assembly Length	Part Numbers						
		Polycarbonate Cap		Glass-Filled Polyester Cap		Glass Epoxy Cap		Metal Cap
		Non-RoHS	RoHS	Non-RoHS	RoHS	Non-RoHS	RoHS	Non-RoHS
Single End Lead Assemblies	**6** 152.4	2-830637-1	—	2-863705-1	—	—	—	—
	12 304.8	1-830637-2	1-5830637-2	1-863705-2	—	—	—	—
	18 457.2	1-830637-3	1-5830637-3	1-863705-3	—	—	—	—
	24 609.6	2-830637-8	2-5830637-8	2-863705-8	7-863705-8	—	—	—
	36 914.4	830637-5	5830637-5	863705-5	—	—	—	—
	48 1219.2	2-830637-4	2-5830637-4	2-863705-4	—	—	—	—
Double End Lead Assemblies	**6** 152.4	—	—	863706-2	—	830638-2	—	—
	12 304.8	1-830638-5	—	1-863706-5	—	—	—	—
	18 457.2	2-830638-0	—	2-863706-0	—	—	—	—
	24 609.6	830638-9	—	863706-9	—	—	—	—
	36 914.4	830638-6	—	863706-6	—	—	—	—
	48 1219.2	1-830638-9	—	1-863706-9	—	—	—	—
Single End Lead Assemblies (with Positive Stop Ferrules)	**6** 152.4	862551-1	—	863707-1	—	—	—	—
	12 304.8	862551-4	5-862551-4	863707-4	—	—	—	—
	18 457.2	862551-6	—	863707-6	—	—	—	—
	24 609.6	862551-8	—	863707-8	5-863707-8	—	—	—
	36 914.4	1-862551-5	—	1-863707-5	—	—	—	—
	48 1219.2	1-862551-2	—	1-863707-2	6-863707-2	—	—	—
Double End Lead Assemblies (with Positive Stop Ferrules)	**6** 152.4	—	—	—	—	862552-1	—	—
	12 304.8	862552-4	—	—	—	—	—	—
	18 457.2	862552-6	—	—	—	—	—	—
	24 609.6	862552-8	—	—	—	—	—	—
	36 914.4	1-862552-3	—	—	—	—	—	—
	48 1219.2	1-862552-0	—	—	—	—	—	—
Shielded Single End Lead Assemblies	**18** 457.2	—	—	—	—	2-846938-0	—	—
	24 609.6	—	—	—	—	2-846938-1	—	—
	36 914.4	—	—	—	—	1-846938-6††	—	—
	48 1219.2	—	—	—	—	846938-8†	—	—
Shielded Double End Lead Assemblies	**12** 304.8	—	—	—	—	849616-7	—	—
	18 457.2	—	—	—	—	1-849616-5	—	—
	36 914.4	—	—	—	—	1-849616-0*	—	—
	60 1524.0	—	—	—	—	2-849616-2*	7-849616-2*	—
RFI Shielded Single End Lead Assemblies**	**12** 304.8	—	—	—	—	—	—	861813-1
	24 609.6	—	—	—	—	—	—	861813-2
	48 1219.2	—	—	—	—	—	—	861813-5
RFI Shielded Double End Lead Assemblies	**12** 304.8	—	—	—	—	—	—	861814-1
	18 457.2	—	—	—	—	—	—	1-861814-9
	24 609.6	—	—	—	—	—	—	2-861814-1
	36 914.4	—	—	—	—	—	—	1-861814-5
	48 1219.9	—	—	—	—	—	—	1-861814-6

*Two equal length ground leads.
**These RFI Shielded Lead Assemblies mate with Receptacle Part Number 861255-1.
†One ground lead, pigtail end only.
††One ground lead, terminated end only. Pigtail End 13 [330.2].

Dimensions are shown for reference purposes only. Specifications subject to change.

Dimensions are in millimeters unless otherwise specified.

USA: +1 800 522 6752
Asia Pacific: +86 0 400 820 6015
UK: +44 800 267 666

For additional support numbers please visit www.te.com

LGH Lead Assemblies and Receptacles, 25 KVDC, LGH 1 L (Continued)

Glass-Epoxy Receptacles with 1.69 [42.93] Barrel Depth

Flanged, for Hermetic Seal
Part Number 861255-1
RoHS Part Number 5-861255-1
Weight — 17 grams

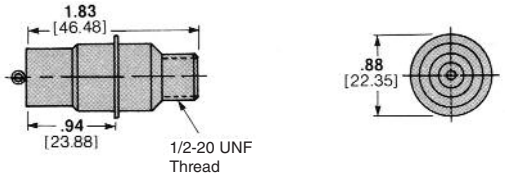

These receptacles are for use with RFI Shielded Leads shown on the preceding page.

Flanged, Bolt Mount
Part Number 846814-1
RoHS Part Number 5-846814-1
Weight — 32 grams

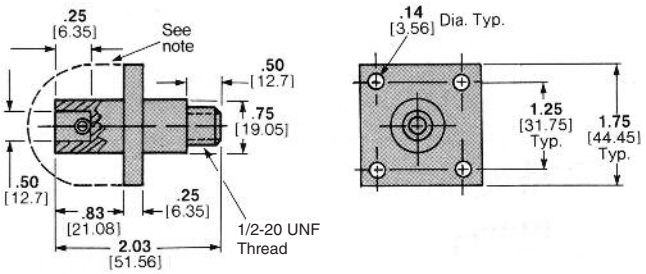

With Recessed Terminal for Encapsulated Units
Part Number 859058-3
Weight — 16 grams

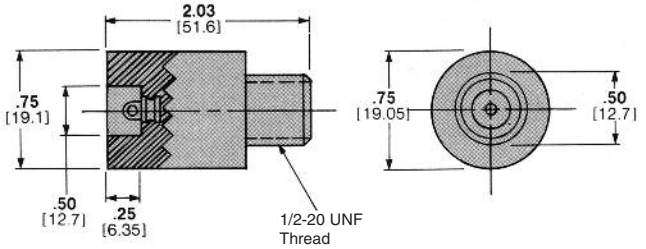

Flanged Receptacle
Part Number 449925-1
Color — Red

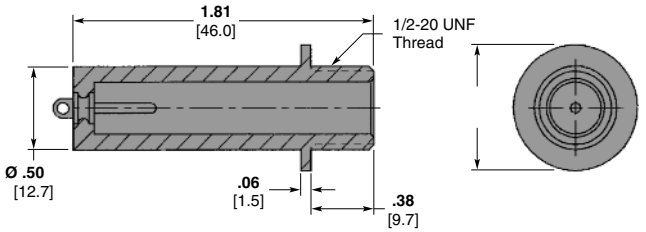

Note: If the panel or mounting hardware is at ground potential, guard against arc-over and breakdown within the area defined by this line.

For Encapsulated Units
Part Number 858868-1
RoHS Part Number 5-858868-1
Weight — 15 grams

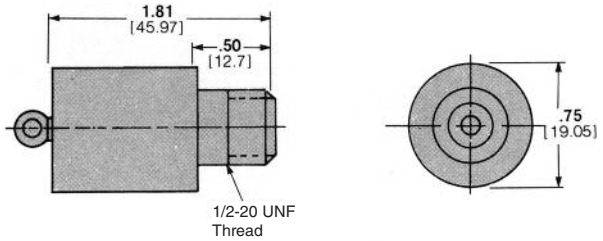

Bolt-mount, Feed-through
Part Number 858873-1
Weight — 70 grams

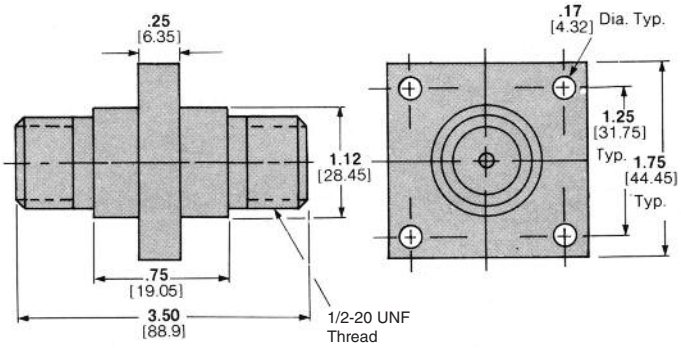

Splice
Part Number 858030-1
Weight — 52 grams

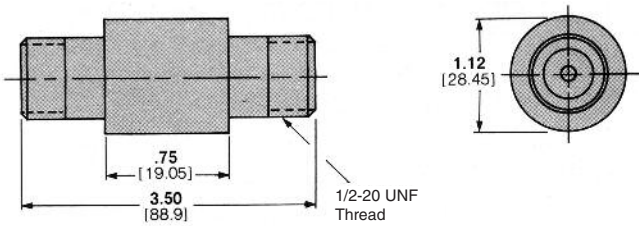

T-Shape Connector
Part Number 830699-1
RoHS Part Number 5-830699-1
Weight — 110 grams

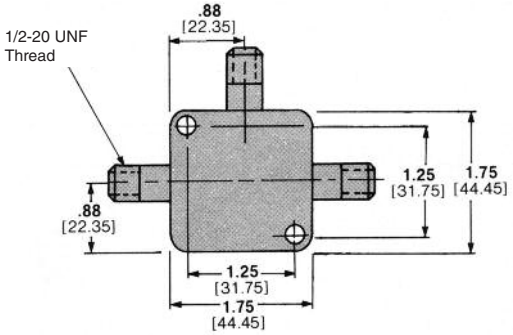

Receptacles are available with gold plated contacts.

LGH Lead Assemblies and Receptacles, 30 KVDC, LGH 2

Single End Lead Assemblies

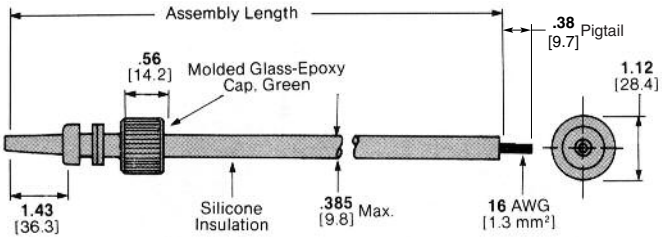

Part Number 839564

Assembly Length	Part Number
6.0 152.4	1-839564-8
12.0 304.8	839564-1 5-839564-1*
18.0 457.2	2-839564-9
24.0 609.6	839564-2 5-839564-2*
36.0 914.4	1-839564-9 6-839564-9*
48.0 1219.2	1-839564-3 6-839564-3*

*RoHS compliant Part Number.

Double End Lead Assemblies

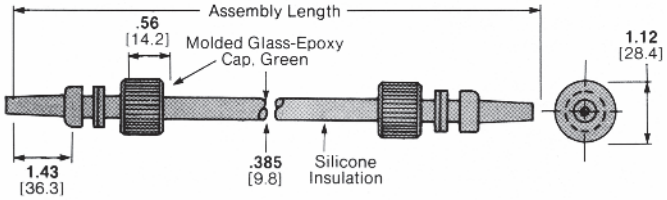

Part Number 839565

Assembly Length	Part Number
8.0 203.2	1-839565-3
12.0 304.8	839565-1
18.0 457.2	2-839565-9
24.0 609.6	839565-9
36.0 914.4	2-839565-5
48.0 1219.2	839565-6

Shielded Single End Lead Assemblies

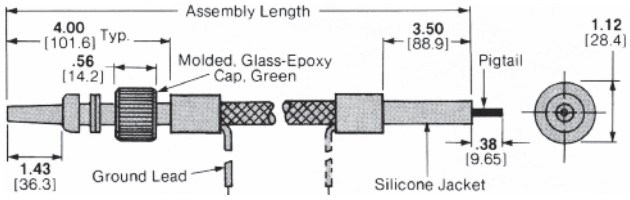

Part Number 849371

Assembly Length	Part Number
12.0 304.8	849371-2
18.0 457.2	849371-8
24.0 609.6	849371-3
48.0 1219.2	849371-9

Shielded Double End Lead Assemblies

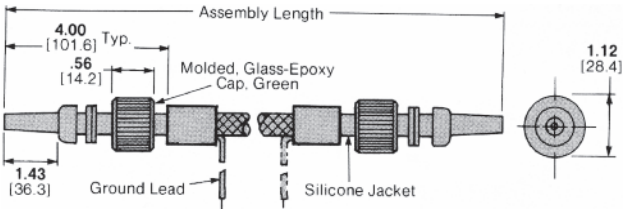

Part Number 848075

Assembly Length	Part Number
24.0 609.6	1-848075-5
36.0 914.4	1-848075-6
48.0 1219.2	2-848075-2**

**Two ground leads, 6.0 [152.4] each

RFI Shielded Single End Lead Assemblies***

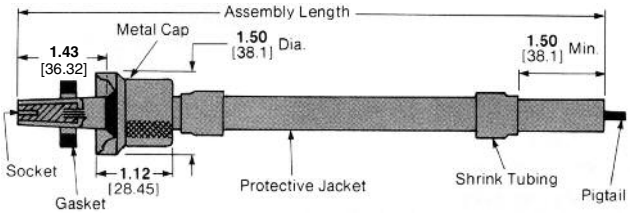

Part Number 867447

Assembly Length	Part Number
12.0 304.8	867447-1
24.0 609.6	867447-2
36.0 914.4	867447-3
48.0 1219.2	867447-4

Note: Standard length leads are tabulated here. TE Connectivity can make available numerous variations in length and material to suit almost any application. Choices of insulation materials include PTFE, UL listed silicone and UL listed PVC. Other materials, colors, wire and configurations can be used in manufacture. For more information, consult TE.
*** These RFI Shielded Lead Assemblies mate with Receptacle Part Number 861256-1.

Dimensions are shown for reference purposes only. Specifications subject to change.

Dimensions are in millimeters unless otherwise specified.

USA: +1 800 522 6752
Asia Pacific: +86 0 400 820 6015
UK: +44 800 267 666

For additional support numbers please visit www.te.com

LGH Lead Assemblies and Receptacles, 30 KVDC, LGH 2 (Continued)

RFI Shielded Double End Lead Assemblies*

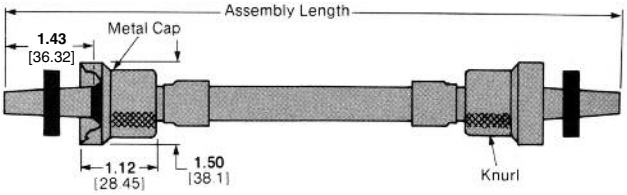

Part Number 867448

Assembly Length	Part Number
12.0 304.8	867448-1
24.0 609.6	867448-2
36.0 914.4	867448-3
48.0 1219.2	867448-4

Note: Standard length leads are tabulated here. TE Connectivity can make available numerous variations in length and material to suit almost any application. Choices of insulation materials include PTFE, UL listed silicone and UL listed PVC. Other materials, colors, wire and configurations can be used in manufacture. For more information, consult TE.
* These RFI Shielded Lead Assemblies mate with receptacle 861256-1.

Glass-Epoxy Receptacles with 1.44 [36.58] Barrel Depth

Flanged, for Hermetic Seal
Part Number 861256-1
RoHS Part Number 5-861256-1
Weight — 20 grams

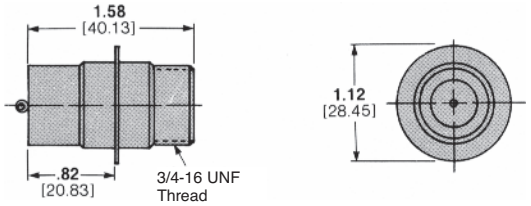

These receptacles are for use with RFI Shielded Leads shown on the preceding page.

Flanged, Bolt Mount
Part Number 850910-1
RoHS Part Number 5-850910-1
Weight — 42 grams

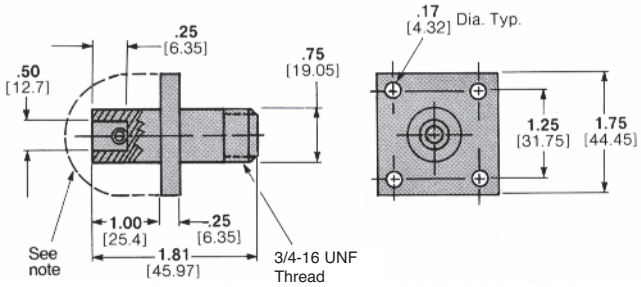

Note: If the panel or mounting hardware is at ground potential, guard against arc-over and breakdown within the area defined by this line.

For Encapsulated Units
Part Number 1-849587-1
RoHS Part Number 1-5849587-1
Weight — 17 grams

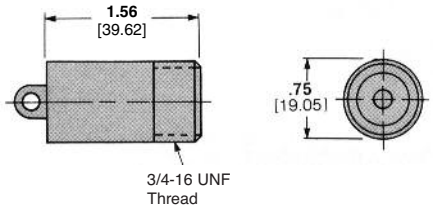

With Recessed Terminal for Encapsulated Units
Part Number 849588-1
RoHS Part Number 5-849588-1
Weight — 20 grams

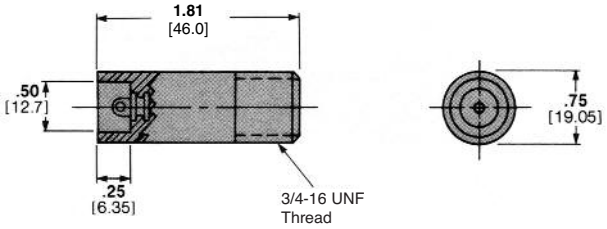

Bolt-mount, Feed-through
Part Number 850735-1
Weight — 70 grams

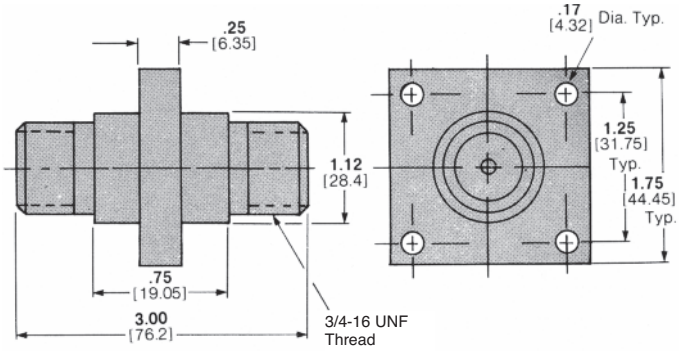

Splice
Part Number 850555-1
Weight — 43 grams

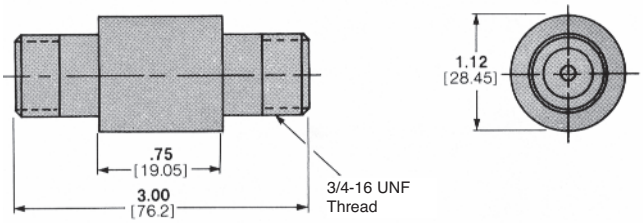

Receptacles are available with gold plated contacts.

LGH Lead Assemblies and Receptacles, 40 KVDC, LGH 3

Single End Lead Assemblies

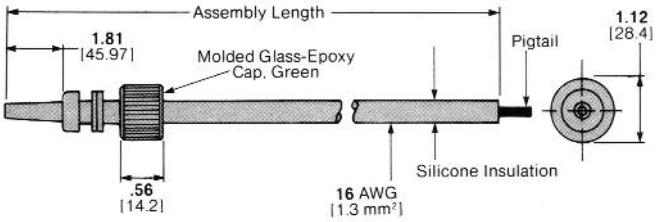

Part Number 837975

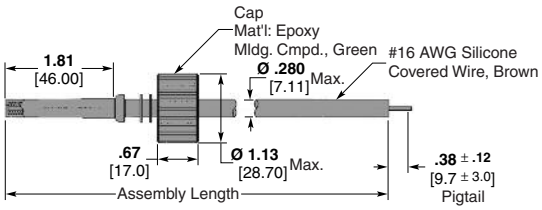

Part Number 868354

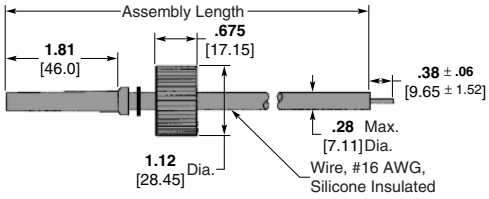

Part Number 869084

Assembly Length	Wire Color	Part Number
6.0 152.4	—	837975-6
12.0 304.8	—	837975-8
18.0 457.2	—	837975-3 5-837975-3*
24.0 609.6	—	1-837975-6 6-837975-6*
36.0 914.4	—	837975-2
48.0 1219.2	—	837975-9 5-837975-9*
60.0 ± 1.00 1524.0 ± 25.4	Brown	868354-2
18.0 ± .25 457.2 ± 6.35	Brown	869084-1
18.0 ± .25 457.2 ± 6.35	Red	869084-2
18.0 ± .25 457.2 ± 6.35	Yellow	869084-3
18.0 ± .25 457.2 ± 6.35	Green	869084-4
18.0 ± .25 457.2 ± 6.35	White	869084-5
24.0 ± .25 609.6 ± 6.35	Brown	869084-6 5-869084-6*
24.0 ± .25 609.6 ± 6.35	Yellow	869084-7 5-869084-7*
24.0 ± .25 609.6 ± 6.35	Green	869084-8 5-869084-8*
24.0 ± .25 609.6 ± 6.35	White	869084-9 5-869084-9*
36.0 ± .25 914.4 ± 6.35	Brown	1-869084-0
48.0 ± .25 1219.2 ± 6.35	Red	1-869084-1
36.0 ± .25 914.4 ± 6.35	Yellow	1-869084-2 6-869084-2*
36.0 ± .25 914.4 ± 6.35	Green	1-869084-3 6-869084-3*

*RoHS compliant Part Number.

Double End Lead Assemblies

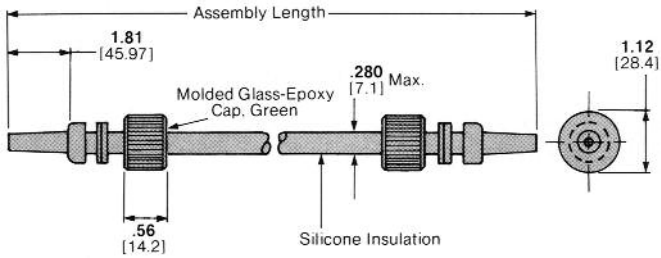

Part Number 830649

Assembly Length	Part Number
12.0 304.8	830649-1
18.0 457.2	830649-3
24.0 609.6	1-830649-0
36.0 914.4	830649-2
48.0 1219.2	830649-6

Catalog 1308940
Revised 9-14

www.te.com

Dimensions are shown for reference purposes only. Specifications subject to change.

Dimensions are in millimeters unless otherwise specified.

USA: +1 800 522 6752
Asia Pacific: +86 0 400 820 6015
UK: +44 800 267 666

For additional support numbers please visit www.te.com

LGH Lead Assemblies and Receptacles, 40 KVDC, LGH 3 (Continued)

Shielded Single End Lead Assemblies

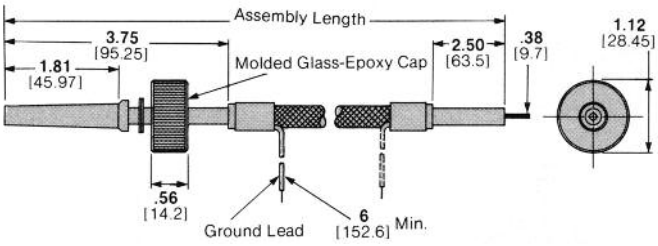

Part Number 848076

Assembly Length	Part Number
12.0 304.8	1-848076-1
18.0 457.2	848076-5
24.0 609.6	848076-1
36.0 914.4	848076-8**
48.0 1219.2	848076-3 5-848076-3*
360.0 9144.0	2-848076-1
16.25 412.8	2-848076-2 7-848076-2*
29.75 755.7	2-848076-3 7-848076-3*
20.25 514.4	2-848076-4
21.75 552.5	2-848076-5 7-848076-5*
16.25 412.8	2-848076-6 7-848076-6*

All leads are shielded and glass braid covered.
*RoHS compliant Part Number.
**Two ground leads each 7" long.

Shielded Double End Lead Assemblies

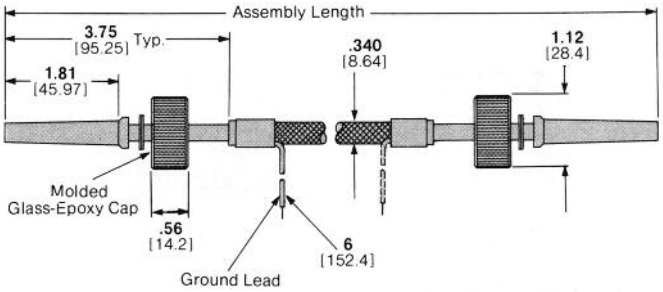

Part Number 848077

Assembly Length	Part Number
12.0 304.8	848077-4
24.0 609.6	848077-1
48.0 1219.2	848077-3 5-848077-3*

*RoHS compliant Part Number.

Dimensions are shown for reference purposes only. Specifications subject to change.

Dimensions are in millimeters unless otherwise specified.

USA: +1 800 522 6752
Asia Pacific: +86 0 400 820 6015
UK: +44 800 267 666

For additional support numbers please visit www.te.com

LGH Lead Assemblies and Receptacles, 40 KVDC, LGH 3 (Continued)

Glass-Epoxy Receptacles with 1.81 [45.97] Barrel Depth

Flanged, For Hermetic Seal
Part Number 861257-1
RoHS Part Number 5-861257-1
Weight — 32 grams

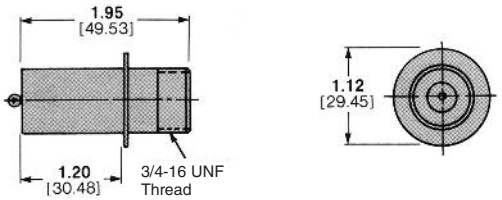

Flanged, Bolt Mount
Part Number 850911-1
RoHS Part Number 5-850911-1
Weight — 53 grams

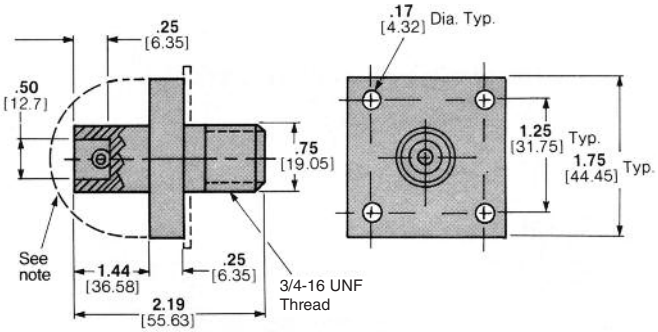

Note: If the panel or mounting hardware is at ground potential, guard against arc-over and breakdown within the area defined by this line.

For Encapsulated Units
Part Number 849587-9
RoHS Part Number 5849587-9
Weight — 28 grams

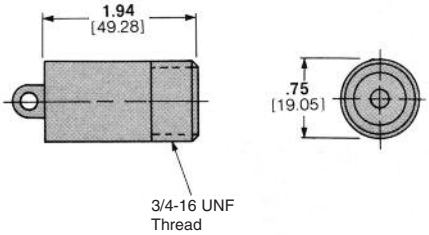

With Recessed Terminal
For Encapsulated Units
Part Number 849588-3
RoHS Part Number 5-849588-3
Weight — 34 grams

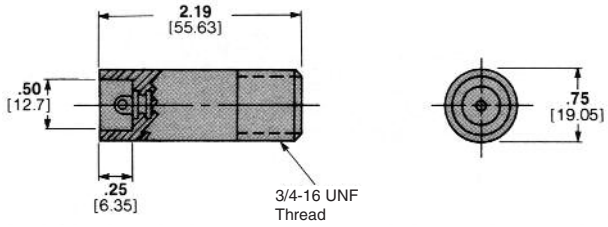

Bolt-Mount, Feed-Through
Part Number 850909-1
Weight — 91 grams

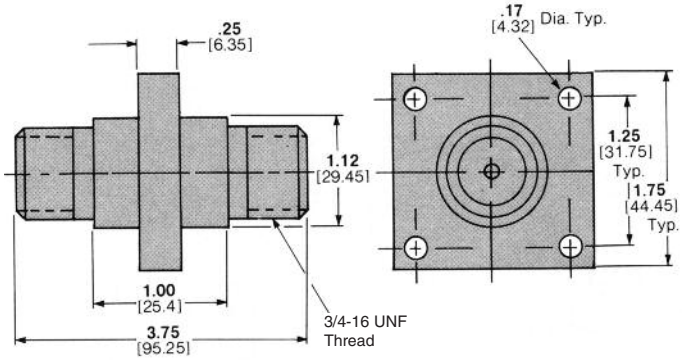

Splice
Part Number 850908-1
Weight — 65 grams

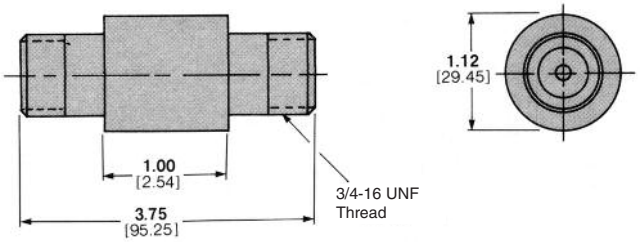

T-Shape Connector
Part Number 860708-1
RoHS Part Number 5-860708-1
Weight — 135 grams

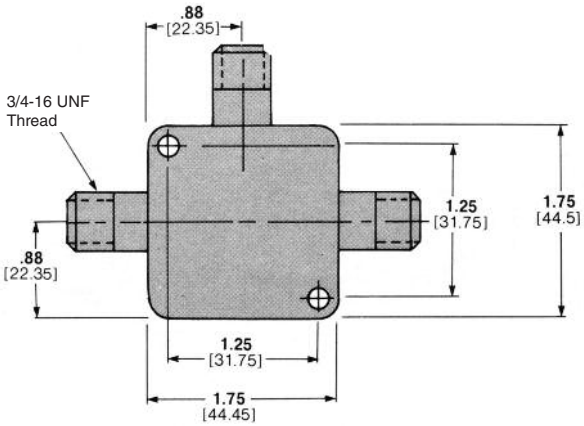

Receptacles are available with gold plated contacts.

Catalog 1308940
Revised 9-14

www.te.com

Dimensions are shown for reference purposes only. Specifications subject to change.

Dimensions are in millimeters unless otherwise specified.

USA: +1 800 522 6752
Asia Pacific: +86 0 400 820 6015
UK: +44 800 267 666

For additional support numbers please visit www.te.com

LGH Lead Assemblies and Receptacles, 50 KVDC, LGH 4

Single End Lead Assemblies

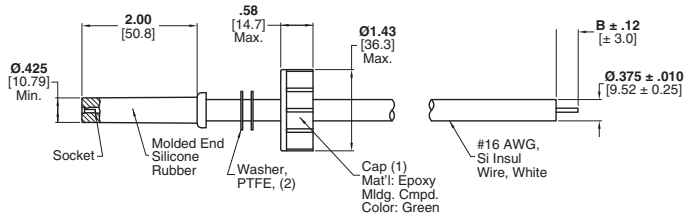

Part Number 846290

Assembly Length	Part Number
6.0 152.4	1-846290-7
12.0 304.8	846290-1 5-846290-1*
18.0 457.2	1-846290-6 6-846290-6*
24.0 609.6	846290-3 5-846290-3*
36.0 914.4	846290-6 5-846290-6*
48.0 1219.2	846290-4 5-846290-4*

*RoHS compliant Part Number.

Double End Lead Assemblies

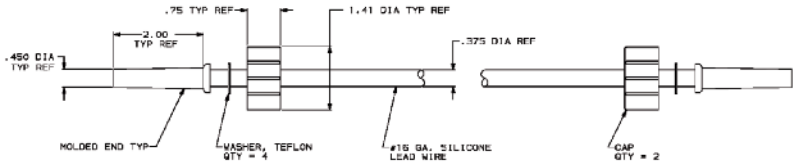

Part Number 445217

Assembly Length	Part Number
18.0 ± .12 457.2 ± 3.05	445217-2
24.0 ± .24 609.6 ± 6.10	445217-1

Double End Lead Assemblies

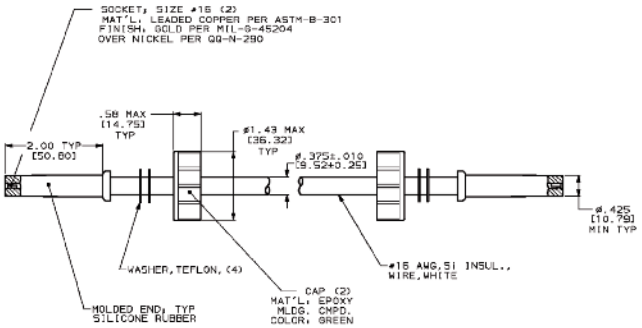

Part Number 846291

Assembly Length	Part Number
12.0 304.8	846291-1
18.0 457.2	1-846291-1
24.0 609.6	846291-3
36.0 914.4	846291-4

Shielded Single End Lead Assemblies

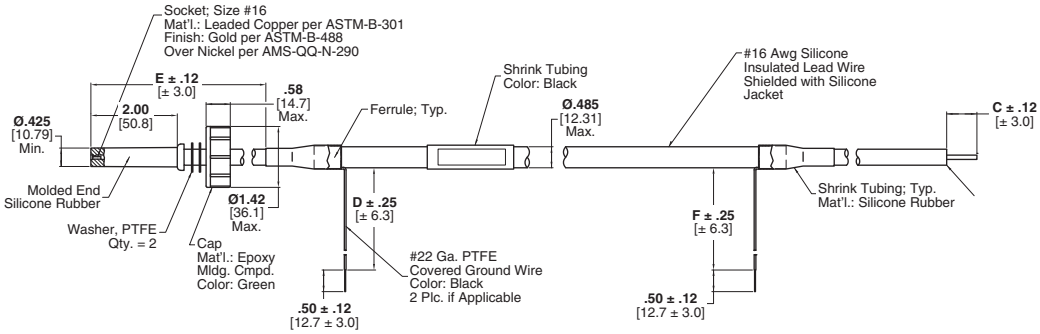

Part Number 848078

Assembly Length	Part Number
24.0 609.6	848078-1
36.0 914.4	2-848078-0
48.0 1219.2	848078-2

Note: Standard length leads are tabulated here. TE Connectivity can make available numerous variations in length and material to suit almost any application. Choices of insulation materials include PTFE, UL listed silicone and UL listed PVC. Other materials, colors, wire and configurations can be used in manufacture. For more information, consult TE.

Dimensions are shown for reference purposes only. Specifications subject to change.

Dimensions are in millimeters unless otherwise specified.

USA: +1 800 522 6752
Asia Pacific: +86 0 400 820 6015
UK: +44 800 267 666

For additional support numbers please visit www.te.com

LGH Lead Assemblies and Receptacles, 50 KVDC, LGH 4 (Continued)

Shielded Double End Lead Assemblies

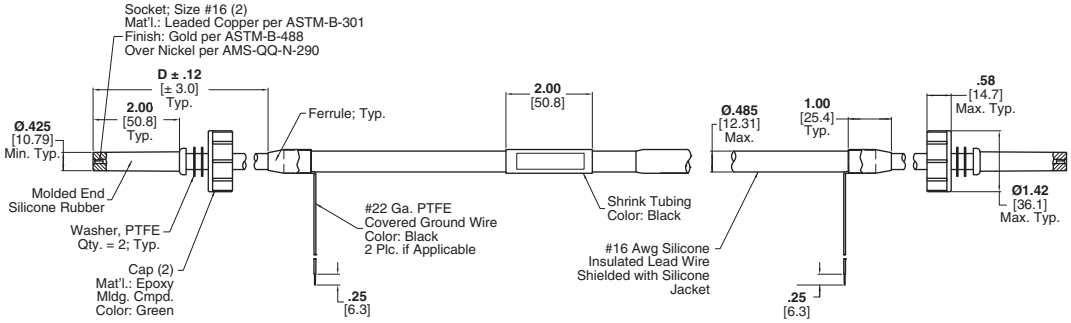

Part Number 846950

Assembly Length	Part Number
12.0 304.8	846950-6
	846950-7
48.0 1219.2	1-846950-0 6-846950-0*

*RoHS compliant Part Number.

RFI Shielded Single End Lead Assemblies*

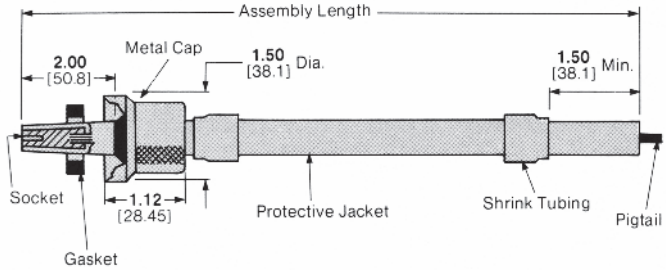

Part Number 865089

Assembly Length	Part Number
12.0 304.8	865089-4
18.0 457.2	865089-5
24.0 609.6	865089-6
36.0 914.4	865089-7
48.0 1219.2	865089-8

RFI Shielded Double End Lead Assemblies*

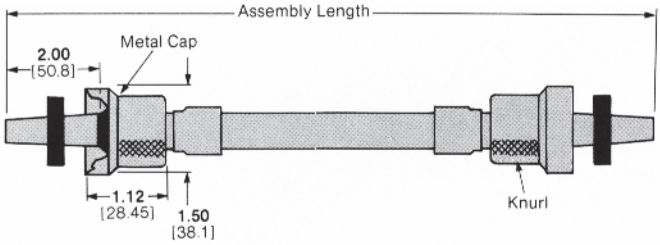

Part Number 865090

Assembly Length	Part Number
12.0 304.8	865090-4
18.0 457.2	865090-7
24.0 609.6	865090-1
36.0 914.4	865090-5 5-865090-5*

*RoHS compliant Part Number.

Note: Standard length leads are tabulated here. TE Connectivity can make available numerous variations in length and material to suit almost any application. Choices of insulation materials include PTFE, UL listed silicone and UL listed PVC. Other materials, colors, wire and configurations can be used in manufacture. For more information, consult TE.
* These RFI Shielded Lead Assemblies mate with receptacle 861258-1.

Dimensions are shown for reference purposes only. Specifications subject to change.

Dimensions are in millimeters unless otherwise specified.

USA: +1 800 522 6752
Asia Pacific: +86 0 400 820 6015
UK: +44 800 267 666

For additional support numbers please visit www.te.com

LGH Lead Assemblies and Receptacles, 50 KVDC, LGH 4 (Continued)

Glass-Epoxy Receptacles with 2.00 [50.8] Barrel Depth

Flanged, For Hermetic Seal
Part Number 861258-1
RoHS Part Number 5-861258-1
Weight — 48 grams

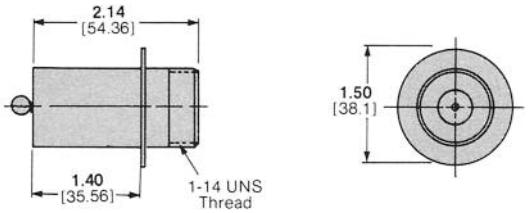

These receptacles are for use with RFI Shielded Leads shown on the preceding page.

Flanged, Bolt Mount
Part Number 850912-1
RoHS Part Number 5-850912-1
Weight — 100 grams

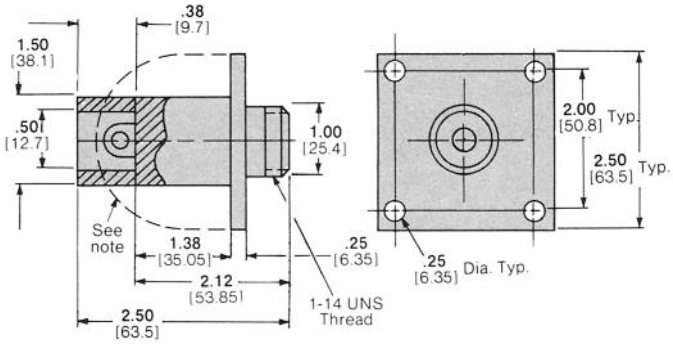

Note: If the panel or mounting hardware is at ground potential, guard against arc-over and breakdown within the area defined by this line.

For Encapsulated Units
Part Number 836567-1
RoHS Part Number 5-836567-1
Weight — 42 grams

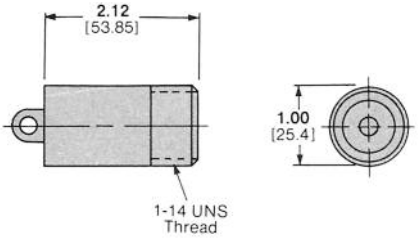

With Recessed Terminal
For Encapsulated Units
Part Number 849853-1
RoHS Part Number 5-849853-1
Weight — 55 grams

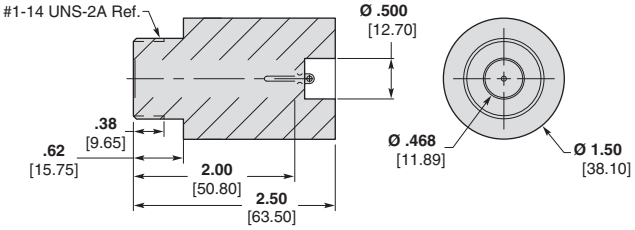

Bolt-Mount, Feed-Through
Part Number 840468-1
Weight — 137 grams

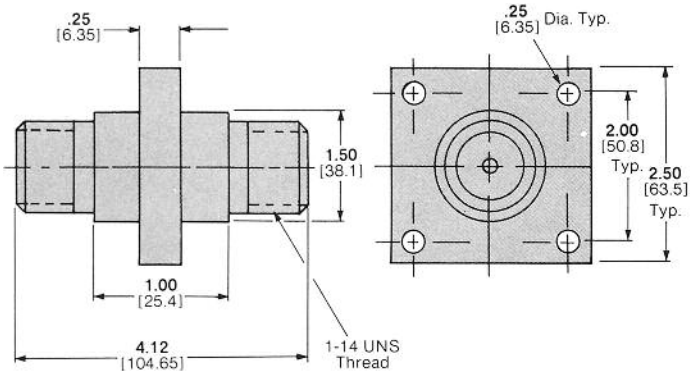

Splice
Part Number 840467-1
Weight — 105 grams

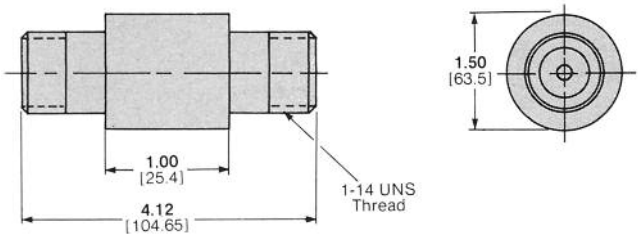

T-Shape Connector
Part Number 850554-1
RoHS Part Number 5-850554-1
Weight — 315 grams

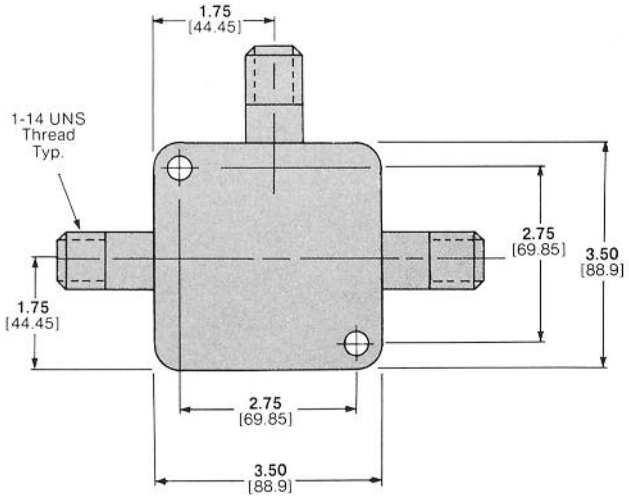

Receptacles are available with gold plated contacts.

Commercial Single Line Connectors

Product Facts

- **All parts made of UL Recognized, 94V-0 rated, plastic material**
- **Designed to exceed minimum creepage and clearance for specified voltages per applicable international specifications**
- **Available with or without leads**
- **Maximum flexibility of application through elimination of predetermined lead lengths**
- **Machine applied terminations provide for lowest applied cost**

The AMP family of Commercial Single Line Connectors provides solutions to high-voltage connection problems at low applied cost. The connectors are excellent for commercial application in industrial environments. Ease of application makes them suitable for large-volume production applications. Crimp, snap-in contacts can be machine terminated or hand-tool crimped.

Housings are self-extinguishing plastic, UL rated 94V-0. 10 KVDC connectors accept 20–24 AWG [0.2–0.6 mm^2] wires. 20 KVDC connectors have contacts which accept 22–20 AWG [0.3–0.6 mm^2] and 18–16 AWG [0.8–1.4 mm^2] conductors. Connectors rated for 30 KVDC offer three choices of contact sizes to cover the 16-8 AWG [1.25–8 mm^2] range.

Performance Specifications

All Series

Altitude — Sea level to 10,000 feet [3048 m]

Temperature — 59°F to +185°F [15°C to +85°C]

Product Specification — 108-36034

10 KVDC Connectors

Voltage — 10 KVDC

Current — 5 amperes, continuous, rms

Dielectric Withstanding Test — 15 KVDC for 3 minutes at sea level, 77°F [25°C]

Instruction Sheet — Part Number 867443-1

20 KVDC Connectors

Voltage — 8 KVAC, rms, 60 Hz; 20 KVDC

Current — 7.5 amperes, continuous, rms

Dielectric Withstanding Test — 12 KVAC, rms, 60 Hz for 3 minutes at sea level, 77°F [25°C]; 30 KVDC for 3 minutes at sea level, 77°F [25°C]

Instruction Sheets —
Plugs — Part Number 862749-1
Receptacles — Part Number 862755-1

30 KVDC Connectors

Voltage — 12 KVAC, rms, 60 Hz; 30 KVDC

Current — 25 amperes, continuous, rms

Dielectric Withstanding Test — 16 KVAC, rms, 60 Hz for 3 minutes at sea level, 77°F [25°C]; 40 KVDC for 3 minutes at sea level, 77°F [25°C]

Catalog 1308940
Revised 9-14

www.te.com

Dimensions are shown for reference purposes only. Specifications subject to change.

Dimensions are in millimeters unless otherwise specified.

USA: +1 800 522 6752
Asia Pacific: +86 0 400 820 6015
UK: +44 800 267 666

For additional support numbers please visit www.te.com

Commercial Single Line 10 KVDC Connectors

Plug Kits

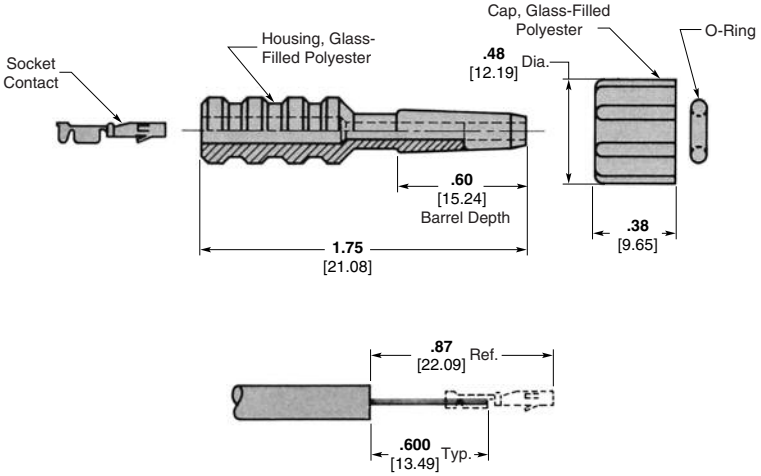

Recommended Wire Preparation
(Ref. Socket Contact Part Number 203802-6)

Receptacle Kit

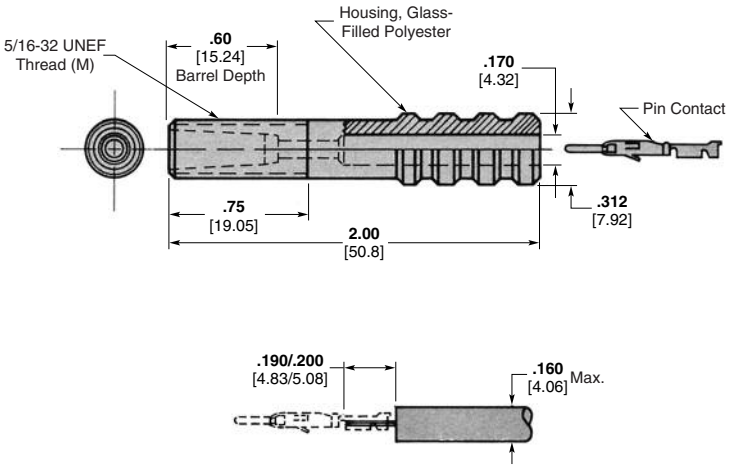

Recommended Wire Preparation
(Ref. Pin Contact Part Number 203816-6)

Voltage Rating	Description	Wire Size AWG	Wire Size mm²	Max. Ins. Dia.	Contact Type	Kit Part Number	Tooling Part Number Hand Tool	Tooling Part Number Extraction Tool
10 KVDC	Plug Kits*	20-24	0.2-0.6	.105 2.66	Type XI Socket	867157-1	91544-1	91038-3
				.160 4.06	Type XI Socket	867157-2	91544-1	91038-3
	Receptacle Kit*	20-24	0.2-0.6	.160 4.06	Type XI Pin	867156-1	91544-1	91038-3

* Contact included with kit.

Catalog 1308940
Revised 9-14

www.te.com

Dimensions are shown for reference purposes only. Specifications subject to change.

Dimensions are in millimeters unless otherwise specified.

USA: +1 800 522 6752
Asia Pacific: +86 0 400 820 6015
UK: +44 800 267 666

For additional support numbers please visit www.te.com

Commercial Single Line 20 KVDC Connectors

Plug Kits

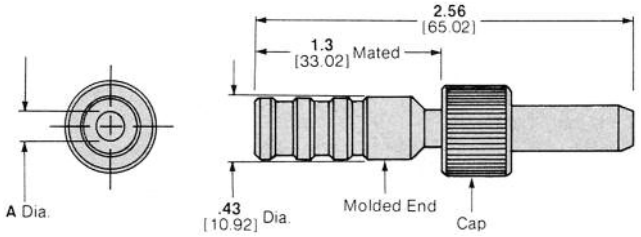

These plugs mate with receptacles shown on this page.

Free-Hanging Receptacle Kits

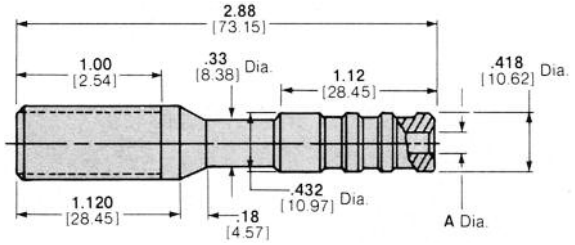

Bulkhead-Mounted Receptacle Kits

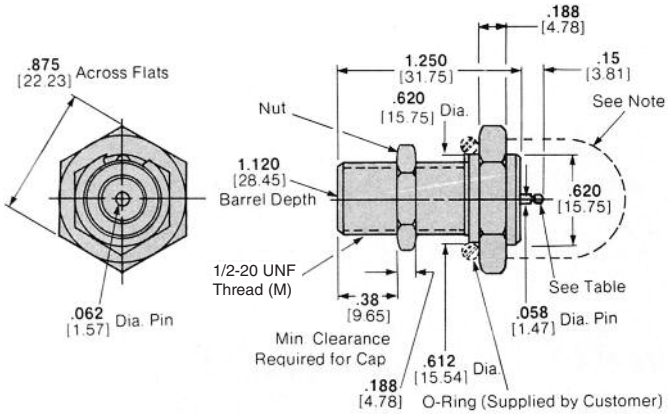

Note: If bulkhead and mounting hardware are metal at ground potential, the back end of the receptacle must be protected against arc-over and breakdown.

Bulkhead-Mounted Receptacle Kits With Rear Insulation Collar

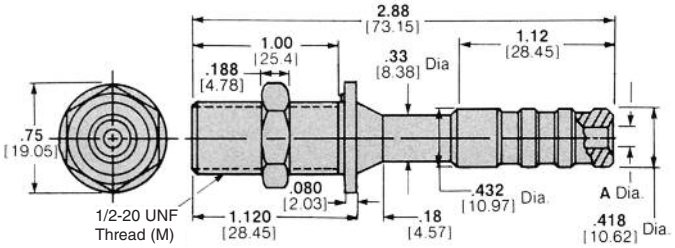

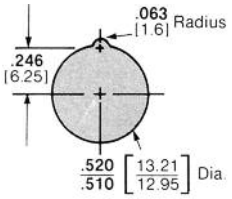

Recommended Panel Cutout for Bulkhead Mounting

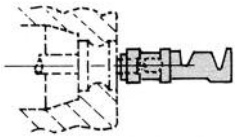

Straight Socket
Part Number 60789-1

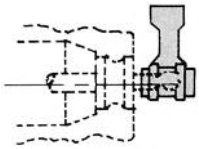

Right-Angle Socket
Part Number 61276-2

Voltage Rating	Description	Wire Size AWG	Wire Size mm²	Max. Ins. Dia.	Contact Part Number	Kit Part Number	RoHS Kit Part Number	Tooling Part Number: Hand Tool	Tooling Part Number: Extraction Tool
20 KVDC	Plug Kits*	22-20	0.3-0.6	.185 4.7	66399-1	861610-1	5-861610-1	91523-1	861751-1
		18-16	0.8-1.4		66101-2	861610-3	5-861610-3	91505-1	861751-1
		—	—		none	861610-5	5-861610-5	—	861751-1
		22-20	0.3-0.6	.302 7.67	66399-1	861610-4	5-861610-4	91523-1	861751-1
		18-16	0.8-1.4		66101-2	861610-2	5-861610-2	91505-1	861751-1
		—	—		none	861610-6	—	—	861751-1
	Free-Hanging Receptacle Kits*	22-20	0.3-0.6	.185 4.7	66400-1	861753-1	5-861753-1	91523-1	861751-1
		18-16	0.8-1.4		66099-2	861753-3	—	91505-1	861751-1
		22-20	0.3-0.6	.302 7.67	66400-1	861753-4	5-861753-4	91523-1	861751-1
		18-16	0.8-1.4		66099-2	861753-2	5-861753-2	91505-1	861751-1
	Bulkhead-Mounted Receptacle Kits*	—	—	—	none	861611-1	—	—	—
		—	—	—	60789-1 (Straight)**	861611-2	—	91507-1	—
		—	—	—	61276-2 (Right-Angle)**	861611-3	—	91507-1	—
	Bulkhead-Mounted Receptacle Kits* (with Rear Insulation Collar)	22-20	0.3-0.6	.185 4.7	66400-1	862197-1	—	91523-1	861751-1
		18-16	0.8-1.4		66099-2	862197-3	—	91505-1	861751-1
		—	—		none	862197-5	—	—	861751-1
		22-20	0.3-0.6	.302 7.67	66400-1	862197-4	—	91523-1	861751-1
		18-16	0.8-1.4		66099-2	862197-2	—	91505-1	861751-1
		—	—		none	862197-6	—	—	861751-1

* Contact included with kit. ** Crimp-on Contacts.

Catalog 1308940
Revised 9-14

www.te.com

Dimensions are shown for reference purposes only. Specifications subject to change.

Dimensions are in millimeters unless otherwise specified.

USA: +1 800 522 6752
Asia Pacific: +86 0 400 820 6015
UK: +44 800 267 666

For additional support numbers please visit www.te.com

Commercial Single Line 30 KVDC Connectors

Plug Kits

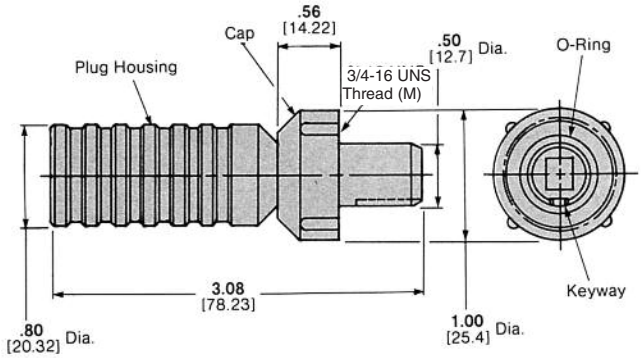

Free-Hanging Receptacle Kit

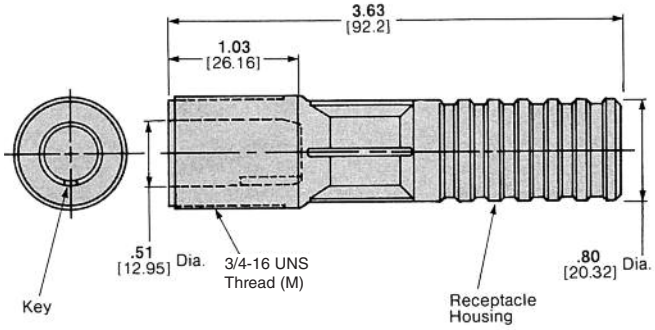

Bulkhead-Mounted Receptacle Kits With Rear Insulation Collar

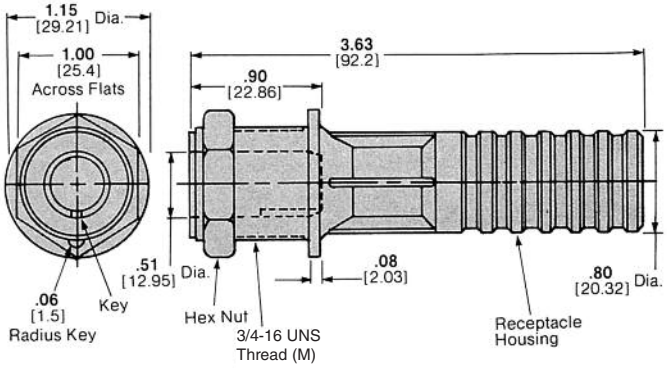

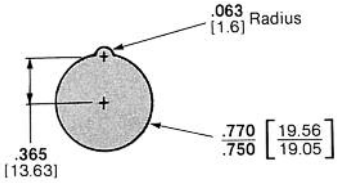

Recommended Panel Cutout for Bulkhead Mounting

Voltage Rating	Description	Wire Size AWG	Wire Size mm²	Max. Ins. Dia.	Contact Part Number Non-RoHS	Contact Part Number RoHS	Kit Part Number Non-RoHS	Kit Part Number RoHS	Tooling Part Number Die Set**	Tooling Part Number Extraction Tool
30 KVDC	Plug Kits*	10	5-6	.50 12.7	66741-8 (Type XII)	2-66741-1	863103-1	5-863103-1	90140-1	863558-1
		14-12	2-3		66740-8 (Type XII)	2-66740-1	863103-2	5-863103-2	90145-1	863558-1
		16	1.4		66740-8 (Type XII)	2-66740-1	863103-3	5-863103-3	90145-2	863558-1
	Free Hanging Receptacle Kits*	10	5-6	.50 12.7	66259-1 (Type XII)	66259-5	863104-1	5-863104-1	90140-1	863558-1
		16	1.4		66261-1 (Type XII)	—	863104-3	—	90145-2	863558-1
	Bulkhead-Mounted Receptacle Kits*	10	5-6	.50 12.7	66259-1 (Type XII)	66259-5	863350-1	5-863350-1	90140-1	863558-1
		14-12	2-3		66261-1 (Type XII)	66261-5	863350-2	5-863350-2	90145-1	863558-1
		16	1.4		66261-1 (Type XII)	66261-5	863350-3	5-863350-3	90145-2	863558-1

* Contact included with kit.
** Die Set for Hand Tool Part Number 69710-1 or 626 Pneumatic Tool System.

Catalog 1308940
Revised 9-14

www.te.com

Dimensions are shown for reference purposes only. Specifications subject to change.

Dimensions are in millimeters unless otherwise specified.

USA: +1 800 522 6752
Asia Pacific: +86 0 400 820 6015
UK: +44 800 267 666

For additional support numbers please visit www.te.com

Two-Position Connectors, 10 KVDC

Product Facts

- **UL recognized 94V-0 rated glass-filled polyester housing**
- **Standard housing color is black — other colors available**
- **Operates up to 10 KVDC**
- **Will withstand a 15 KVDC hipot 3-minute test**
- **Safe handling of high voltage — deeply recessed contacts and staggered pins**
- **Lightweight, compact design**
- **Preassembled connectors furnished with attached leads of virtually any color/length combination**
- **Connector kits for shielded and unshielded applications include plug, receptacle and contacts**
- **Crimp, snap-in contacts; pin diameter .062 [1.57]**
- **Snap-in panel mount receptacle housings — no mounting hardware required**
- **Temperature range: 5°F to 185°F [-15°C to +85°C]**

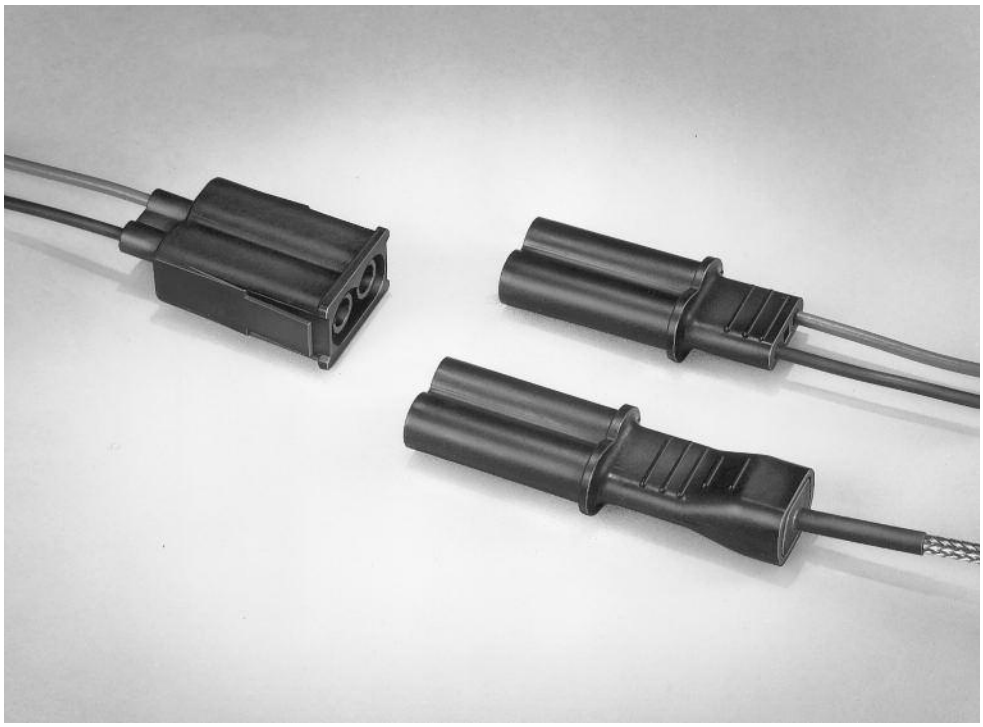

The AMP Rectangular Two Position LGH connector is designed for high voltage applications where quick bulkhead mounting is desired; the receptacle half has molded wings which allow it to be snapped into a mounting hole. Operating voltage is 10 KVDC; however, increased voltage ratings and ac operating capabilities are possible for specific applications.

These connectors incorporate many outstanding design features for their complete electrical, mechanical and environmental integrity. Such features include: housings made of UL recognized 94V-0 glass-filled polyester; contacts with a 10-ampere rating which will accommodate wire sizes of No. 22–20 AWG [0.3–0.6 mm^2] and No. 18–16 AWG [0.8–1.4 mm^2]; polarized plugs and receptacles for proper connector mating; flanged receptacles to facilitate panel and bulkhead mounting; fully protected pins in the plug half and recessed sockets in the receptacle half for safe high-voltage handling; and quick connect/disconnect capability with ramp-type detent mating. Also for maximum handling safety, the pins in the plug housing are stagger-mounted so that the ground or return line makes before and breaks after the hot line mates and unmates.

The connectors are supplied preassembled (with attached leads) and in kits for shielded or unshielded applications. Each conveniently packaged kit includes a plug, receptacle and pins and sockets that can be hand-tool or machine crimped or soldered to wire. Preassembled connectors can be furnished with leads of virtually any length and color. All are fully tested so that they are of the highest quality and meet all performance specifications.

Catalog 1308940
Revised 9-14

www.te.com

Dimensions are shown for reference purposes only. Specifications subject to change.

Dimensions are in millimeters unless otherwise specified.

USA: +1 800 522 6752
Asia Pacific: +86 0 400 820 6015
UK: +44 800 267 666

For additional support numbers please visit www.te.com

Two-Position Connectors, 10 KVDC (Continued)

Connector Kits Shielded and Unshielded

Material:

Housings and End Plate — Glass filled polyester

Contacts — Type III+, tin-plated brass

Plug Housing

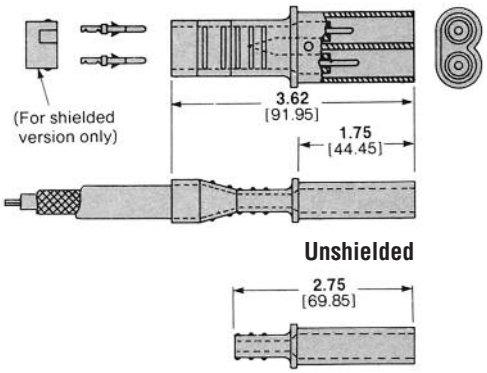

Receptacle Housing, Unshielded

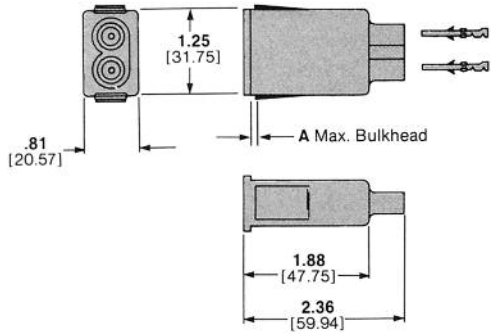

Receptacle Pre-Wired

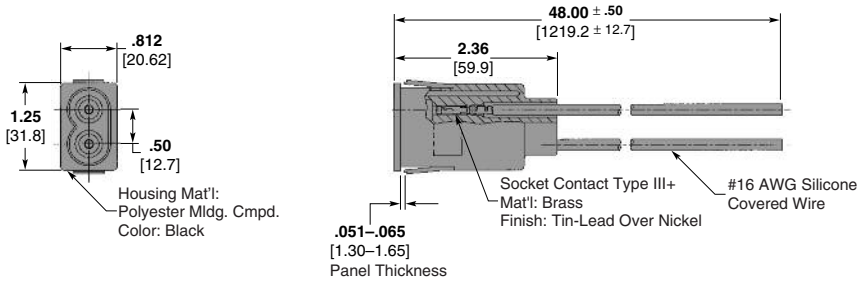

Part Number 443903-1 White Wire
Part Number 443903-2 UL 3239 Wire, Black
RoHS Part Number 5-443903-2 UL 3239 Wire, Black

Plug Pre-Wired

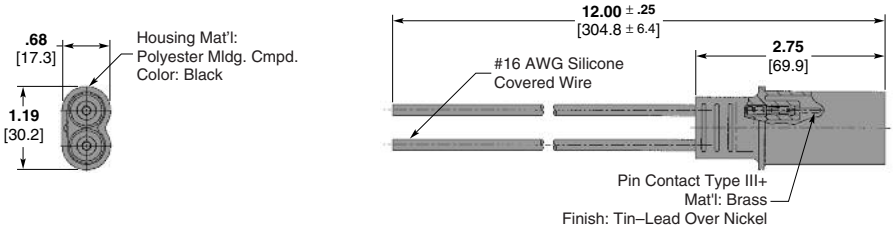

Part Number 443904-1 White Wire
Part Number 443904-2 UL 3239 Wire, Black
RoHS Part Number 5-443904-2 UL 3239 Wire, Black

Mated Dimensions

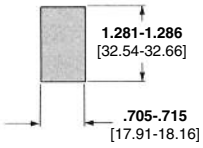

Recommended Panel Cutout

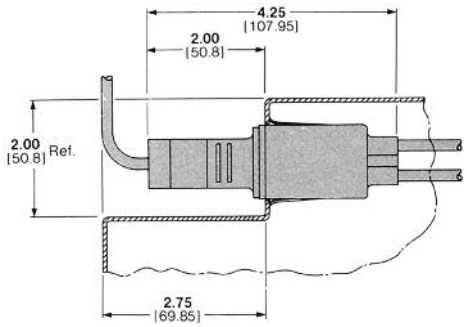

Catalog 1308940
Revised 9-14

www.te.com

Dimensions are shown for reference purposes only. Specifications subject to change.

Dimensions are in millimeters unless otherwise specified.

USA: +1 800 522 6752
Asia Pacific: +86 0 400 820 6015
UK: +44 800 267 666

For additional support numbers please visit www.te.com

Two-Position Connectors, 10 KVDC (Continued)

Connector Type	Bulkhead Thickness	Wire Range (AWG)	Insulation Diameter (Max.)	Plug Part Numbers			Receptacle Part Numbers		
				Assembly	Housing	Pin (Type III+) (2 required)	Assembly	Housing	Socket (Type III+) (2 required)
Shielded	**.030** .762	18-16 [0.8-1.4]	**.125** [3.18]	862528-1 5-862528-1*	862498-1	66099-2 1-66099-5*	1-862435-2	862382-2	66101-2
			.200 [5.08]	862528-1 5-862528-1*	862498-1	66099-2 1-66099-5*	1-862435-0	862382-5	66101-2
		22-20 [0.3-0.6]	**.125** [3.18]	862528-2	862498-1	66400-1	1-862435-3	862382-2	66399-1
			.200 [5.08]	862528-2	862498-1	66400-1	1-862435-1	862382-5	66399-1
	.062 1.57	18-16 [0.8-1.4]	**.125** [3.18]	862528-1 5-862528-1*	862498-1	66099-2 1-66099-5*	862435-1	862382-1	66101-2
			.200 [5.08]	862528-1 5-862528-1*	862498-1	66099-2 1-66099-5*	862435-3 1-862435-5*	862382-4	66101-2 1-66101-9*
		22-20 [0.3-0.6]	**.125** [3.18]	862528-2	862498-1	66400-1	862435-2	862382-1	66399-1
			.200 [5.08]	862528-2	862498-1	66400-1	862435-4	862382-4	66399-1
	.090 2.29	18-16 [0.8-1.4]	**.125** [3.18]	862528-1 5-862528-1*	862498-1	66099-2 1-66099-5*	862435-8	862382-3	66101-2
			.200 [5.08]	862528-1 5-862528-1*	862498-1	66099-2 1-66099-5*	862435-6	862382-6	66101-2
		22-20 [0.3-0.6]	**.125** [3.18]	862528-2	862498-1	66400-1	862435-9	862382-3	66399-1
			.200 [5.08]	862528-2	862498-1	66400-1	862435-7	862382-6	66399-1
Unshielded	**.030** .762	18-16 [0.8-1.4]	**.125** [3.18]	862434-1	862383-1	66099-2	1-862435-2	862382-2	66101-2
			.200 [5.08]	862434-3 862434-7*	862383-2	66099-2 1-66099-5*	1-862435-0	862382-5	66101-2
		22-20 [0.3-0.6]	**.125** [3.18]	862434-2 862434-6*	862383-1	66400-1	1-862435-3	862382-2	66399-1
			.200 [5.08]	862434-4	862383-2	66400-1	1-862435-1	862382-5	66399-1
	.062 1.57	18-16 [0.8-1.4]	**.125** [3.18]	862434-1	862383-1	66099-2	862435-1	862382-1	66101-2
			.200 [5.08]	862434-3 862434-7*	862383-2	66099-2 1-66099-5*	862435-3 1-862435-5*	862382-4	66101-2 1-66101-9*
		22-20 [0.3-0.6]	**.125** [3.18]	862434-2 862434-6*	862383-1	66400-1	862435-2	862382-1	66399-1
			.200 [5.08]	862434-4	862383-2	66400-1	862435-4	862382-4	66399-1
	.090 2.29	18-16 [0.8-1.4]	**.125** [3.18]	862434-1	862383-1	66099-2	862435-8	862382-3	66101-2
			.200 [5.08]	862434-3 862434-7*	862383-2	66099-2 1-66099-5*	862435-6	862382-6	66101-2
		22-20 [0.3-0.6]	**.125** [3.18]	862434-2 862434-6*	862383-1	66400-1	862435-9	862382-3	66399-1
			.200 [5.08]	862434-4	862383-2	66400-1	862435-7	862382-6	66399-1

Notes: 1. Hand Tool Part Number 90067-2 and Extraction Tool Part Number 861751-1 are recommended for all contacts; contacts can be machine-applied.
2. Fully assembled connectors terminated on specified length leads are available. Consult TE Connectivity.
3. Receptacle Housing Dim. (Typ.)—1.25 [31.75] L x 2.36 [59.94] W x .81 [20.57] H.

*RoHS compliant Part Number.

Multi-Pin Circular Commercial Connectors, 27 KVDC

Product Facts

- **Housing made of UL recognized, 94V-0 rated, self-extinguishing polyester materials**
- **Standard housing color is black — other colors available**
- **Operating and storage temperature range: -55°C to +125°C [-67°F to +257°F]**
- **Operates up to 27 KVDC**
- **Will withstand a 35 KVDC hipot test**
- **Safe handling of high-voltage — no exposed contacts**
- **Lightweight, compact design**
- **Threaded coupling provides positive, quick connect/ disconnect**
- **Resilient silicone rubber "O" rings provide positive sealing for mated connectors**
- **Can be panel or bulkhead mounted or used in free-hanging applications**
- **Size 16 gold-plated contacts with 13 ampere rating accommodate wide range of wire sizes — 24-20 AWG and 18-16-14 AWG — may be hand tool or machine crimped or soldered**
- **Two shell sizes available: smaller size offers 2-, 3- and 4-contact configurations; larger diameter shell contains 6 or 7 contacts**

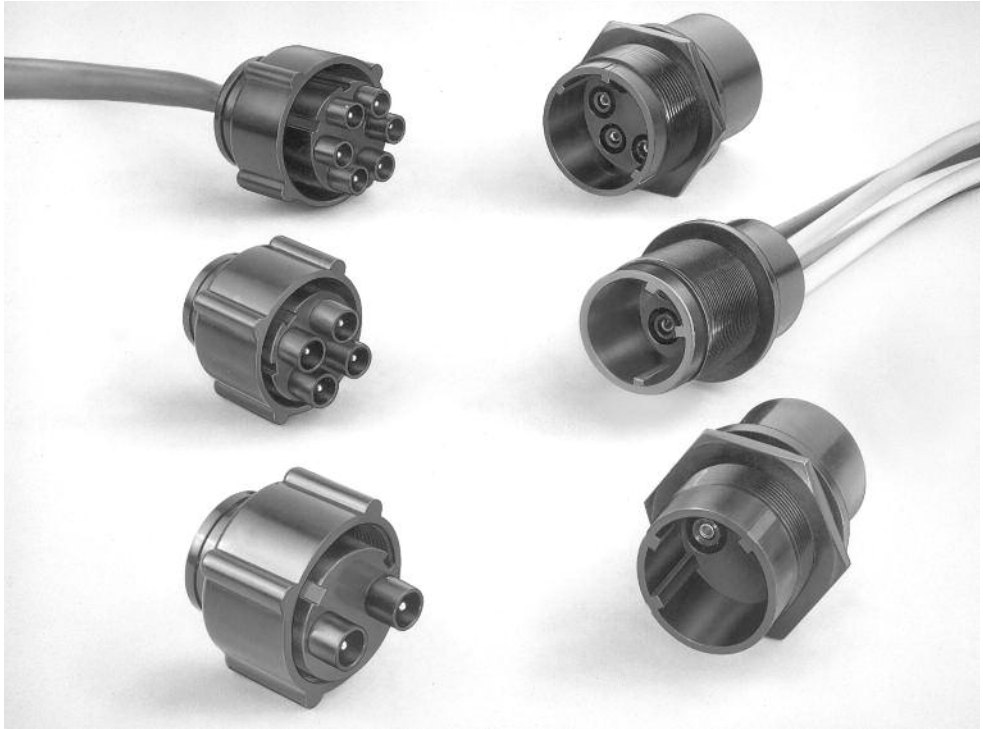

AMP Multi-Pin Circular Connectors provide reliable, safe, low cost means of connecting high voltages in critical applications and environments. They are lightweight, extremely compact and can be operated within a temperature range of -67°F to 257°F [-55°C to +125°C] and to 27 KVDC.

Circular multi-pin high voltage connectors are available in two basic shell sizes offering 2-, 3-, 4-, 6- and 7-contact configurations. All are equipped with threaded couplings for positive, quick connect/disconnect capability and can be panel or bulkhead mounted or used as free-hanging connectors. They incorporate many outstanding design features to assure their complete electrical, mechanical and environmental integrity.

To satisfy customer requirements, the connectors are supplied pre-assembled (with attached leads) or in kit form. Each kit includes a plug, receptacle and an appropriate number of pins and sockets that can be hand tool or machine crimped or soldered to wire. Pre-assembled connectors can be furnished with leads of virtually any length and color. All are fully potted and tested so that they are of high quality and meet performance specifications.

Dimensions are shown for reference purposes only. Specifications subject to change.

Dimensions are in millimeters unless otherwise specified.

USA: +1 800 522 6752
Asia Pacific: +86 0 400 820 6015
UK: +44 800 267 666

For additional support numbers please visit www.te.com

Multi-Pin Circular Commercial Connectors, 27 KVDC (Continued)

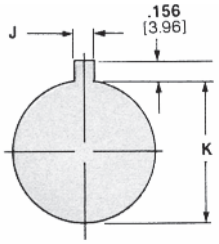

Recommended Panel Cutout for Bulkhead Mounting

Mounting Nut — maximum torque is 20 in.-lb. [.225 Nm].

Plug

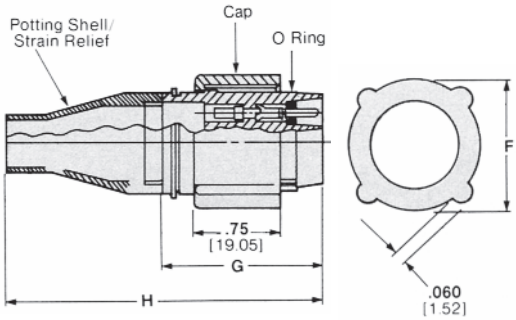

Receptacle

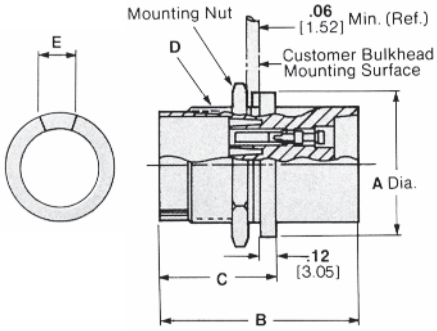

Material

Housing, Cap Nut and Strain Relief — Glass-reinforced polyester

O-Ring — Silicone rubber

Contacts — Type II, gold plated per MIL-G-45204

Instruction Sheet — IS 408-9169

Hand Tools

24-20 AWG [0.2-0.6 mm²] — Part Number 58305-1

18-16 AWG [0.8-1.4 mm²] — Part Number 45098

14 AWG [2 mm²] — Part Number 45098

Extraction Tool

Part Number 861751-1

Component Parts

Pin (loose piece) —
24-20 AWG [0.2-0.6 mm²]
Part Number 200679-1

18-16 AWG [0.8-1.4 mm²]
Part Number 200681-1

14 AWG [2 mm²]
Part Number 201645-1

Socket (loose piece) —
24-20 AWG [0.2-0.6 mm²]
Part Number 201328-1

18-16 AWG [0.8-1.4 mm²]
Part Number 200333-1

14 AWG [2 mm²]
Part Number 201568-1

O-ring (package of 50)
Part Number 862798-1

Potting shell/strain relief (2, 3 and 4 contact plugs) —
Part Number 862544-1

Potting shell/strain relief (6 and 7 contact plugs) —
Part Number 862695-1

Potting shell (short, for 6 and 7 contact plugs, 1.125 [28.58] long) —
Part Number 863995-1

Dimensions

Contacts	A	B	C	D	E	F	G	H	J	K
2, 3, 4	**1.25** 31.75	**1.75** 44.45	**1.00** 25.4	**1** (28 UN) 25.4	**.125** 3.18	**1.31** 33.27	**1.38** 35.05	**2.00** 50.8	**1.56** 3.96	**1.015–1.031** 25.78–26.19
6, 7	**1.50** 38.1	**2.00** 50.8	**1.06** 26.92	**1.25** (20 UN) 31.75	**.190** 4.85	**1.56** 39.62	**1.48** 37.59	**3.30** 83.82	**.203** 5.16	**1.260–1.270** 32.00–32.26

Cable Assembly, 7 Pos. Plug

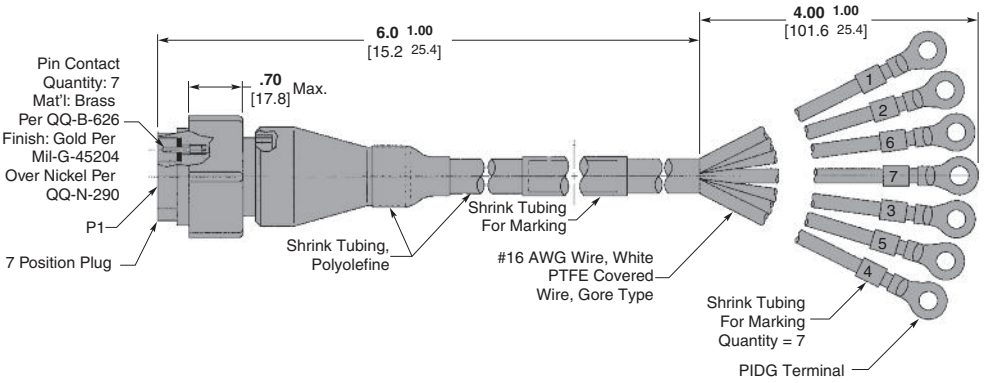

Part Number 447288-1

Note: 4-Pos. Receptacle Housing Dim. (Typ.)—1.75 [44.45] L x 1.25 [31.75] Dia.

Number of Contacts	Wire Range AWG	Wire Range mm²	Receptacle Kit (with sockets)	Plug Kit (with pins)	Plug (with Strain Relief) and Receptacle Kit
2	24-20	0.2-0.6	859529-4	860261-4	863015-1
	18-16	0.8-1.4	859529-5	860261-5	863015-2
	14*	2	859529-6	860261-6	863015-3
3	24-20	0.2-0.6	859528-4	860263-4	863016-1
	18-16	0.8-1.4	859528-5	860263-5	863016-2
	14*	2	859528-6	860263-6	863016-3
4	24-20	0.2-0.6	859526-4	860265-4	863017-1
	18-16	0.8-1.4	859526-5	860265-5	863017-2
	14*	2	859526-6	860265-6	863017-3
6	24-20	0.2-0.6	859527-4	860267-4	863018-1
	18-16	0.8-1.4	859527-5	860267-5	863018-2
	14*	2	859527-6	860267-6	863018-3
7	24-20	0.2-0.6	861647-7	861648-7	863019-1
	18-16	0.8-1.4	861647-8	861648-8	863019-2
	14*	2	861647-9	861648-9	863019-3

Note: Contacts are packaged separately within the connector kit for shipment. Connectors are available with leads attached.
*Use Type II, Size 16 contacts, with a wire barrel sized to accept 14 AWG conductor.

Dimensions are shown for reference purposes only. Specifications subject to change.

Dimensions are in millimeters unless otherwise specified.

USA: +1 800 522 6752
Asia Pacific: +86 0 400 820 6015
UK: +44 800 267 666

For additional support numbers please visit www.te.com

Multi-Line High Voltage Connectors

Product Facts

- **User configurable high voltage connector**
- **Cost effective, 6-position**
- **Operating voltage: 5,000 volts DC**
- **Operating current: 3 Amps max.**
- **Quick-turn threaded coupling**
- **Accepts Type XI size 20 contacts**

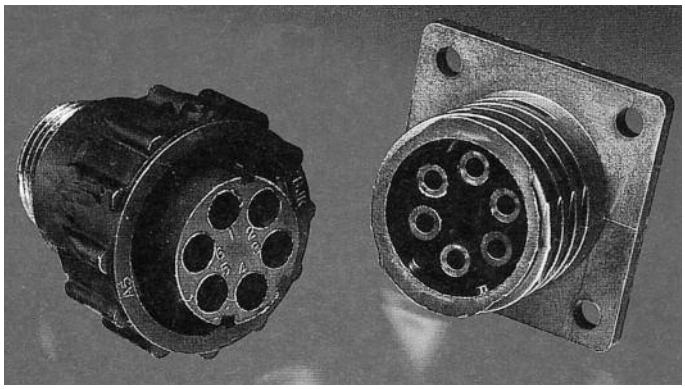

A cost-effective approach in a plastic circular connector with crimp snap-in contacts. Wherever high voltage is required, this user friendly configuration can operate up to 5,000 volts DC.

This 6 position connector can be selectively loaded for various high voltage applications such as:

- Materials Handling Equipment
- Medical Equipment
- Computer and Peripheral Equipment
- HV Power Supplies
- Automated Manufacturing Equipment
- Test Equipment

This LGH connector offers an economical solution for your high voltage requirements. This quick-turn coupling connector will also accommodate standard TE Connectivity Circular Plastic Connector backshell accessories.

Material and Mechanical Characteristics

Housings — UL 94V-0

Operating Temperature — -5°F to 185°F [-15° C to 85°C]

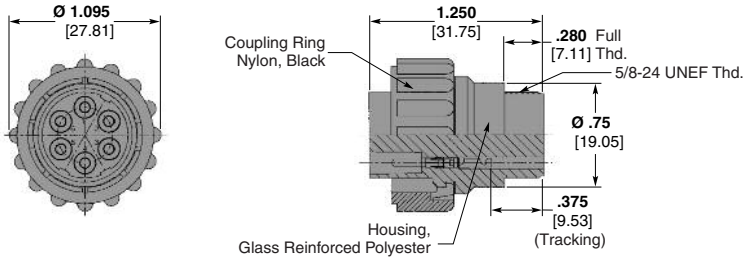

Part Number 867534-1

Accepts Pin Contact
Part Number 203816-6 for 20-24 AWG wire
(Not Supplied with Plug Kit)

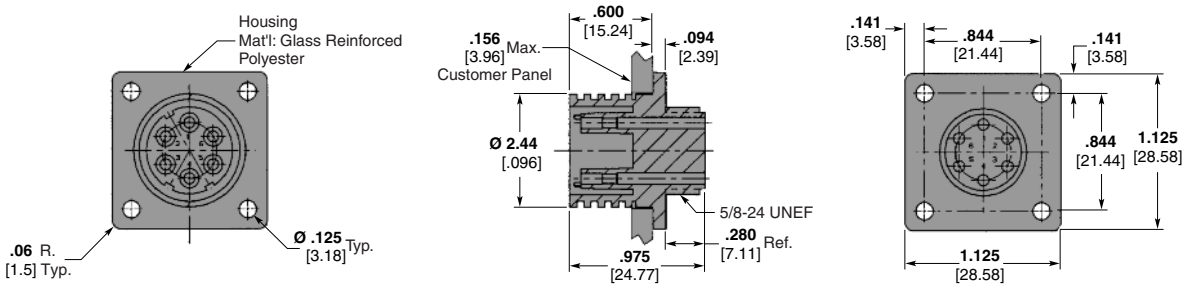

Part Number 867535-1

Accepts Socket Contact
Part Number 203802-6 for 20-24 AWG wire
(Not Supplied with Receptacle)

Catalog 1308940
Revised 9-14

www.te.com

Dimensions are shown for reference purposes only. Specifications subject to change.

Dimensions are in millimeters unless otherwise specified.

USA: +1 800 522 6752
Asia Pacific: +86 0 400 820 6015
UK: +44 800 267 666

For additional support numbers please visit www.te.com

5-Pin, Metal-Shell Circular Connectors, Military-Type

Product Facts

- **Field installable and repairable**
- **Environmentally sealed**
- **Bayonet locking cap**
- **Single dot polarization helps prevent mismating**
- **Accepts any MIL-C-38999 backshell arrangement**
- **Three insert polarizations available**
- **Rated for 10 KVDC and 10 amps**
- **Withstands 15 KVDC hipot test**
- **Safe handling of high voltage — no exposed contacts**
- **Lightweight, compact design**
- **Size 16 gold plated contacts with 10 ampere rating accommodates wire range 24-16 AWG [0.2-1.4 mm²] and may be hand tool crimped, machine crimped, or soldered**
- **Can be panel or bulkhead mounted or used in free-hanging applications**
- **Preassembled connectors furnished with attached leads of virtually any color/length combination**
- **Removable inserts interchangeable between shell halves**
- **Positions numbered for easy circuit identification**
- **Backshell available for bundle shielding**
- **Operating and storage temperature range: -67°F to +257°F [-55°C to +125°C]**

Material and Finish

Shells — Aluminum chromate coating over nickel plating

Inserts — Glass reinforced polyester

Bayonet Coupling Rings — Glass reinforced polyester

O Ring Seals — Silicone rubber

Pin and Socket Contacts — Brass; .00050 [0.013] min. gold plated per MIL-G-45204

Backshell — Brass; plated chromate over nickel

AMP 5-Pin Metal Shell Connectors are designed for high voltage circuits, especially in critical applications and harsh environments, such as shipboard applications. The connector is exceptionally lightweight and compact and can be used within a temperature range of -67°F to +257°F [-55°C to +125°C].

The connector incorporates many features for electrical, mechanical and environmental integrity. Such features include: flame retardant, glass-filled thermoplastic polyester inserts; two sets of gold plated size 16 contacts which have a 10 ampere rating and will accommodate a wire size range of 24–16 AWG [0.2–1.4mm²]; three insert polarizations; full protection of pins and sockets to permit safer high voltage handling; and resilient seals inside each pin shroud which provide positive sealing for the mated connector.

TE Connectivity supplies the connector either preassembled or in kit form. Each conveniently packaged kit includes an appropriate number of pins and sockets that can be hand tool crimped, machine crimped or soldered to wire. Pre-assembled connectors can be furnished with leads of virtually any length. All are tested for highest quality and meets applicable performance specifications.

Kits

Description	Part Numbers			
	Kit with Contacts for 16 AWG [1.25-1.4 mm²]		Kit with Contacts for 20 AWG [0.5-0.6 mm²]	
	Non-RoHS	RoHS	Non-RoHS	RoHS
Receptacle, Flange-Mount with Socket Contacts	863754-1	5-863754-1	864062-1	5-864062-1
Plug with Pin Contacts	863753-1	—	864063-1	5-864063-1
Receptacle, Flange-Mount with Pin Contacts	863755-1	5-863755-1	864064-1	—
Plug with Socket Contacts	863752-1	5-863752-1	864065-1	—

Note: Backshell is not included with any kits; any MIL-C-38999 backshell may be used or AMP Part Number 864639-2.

Tooling

Tool Application	Manufacturer's Name	Part Numbers
Insert Removal	AMP	864437-1
Contact Removal	AMP	305183
Crimp Tool Contact Positioner	Daniels	TP-581
Crimp Tool	Daniels	M22520/1-01
Instruction Sheet	AMP	864886

For more information on 5-Pin Metal Shell Circular Connector to meet your specific requirements, consult TE.

Catalog 1308940
Revised 9-14

www.te.com

Dimensions are shown for reference purposes only. Specifications subject to change.

Dimensions are in millimeters unless otherwise specified.

USA: +1 800 522 6752
Asia Pacific: +86 0 400 820 6015
UK: +44 800 267 666

For additional support numbers please visit www.te.com

5-Pin, Metal-Shell Circular Connectors, Military-Type (Continued)

Receptacle

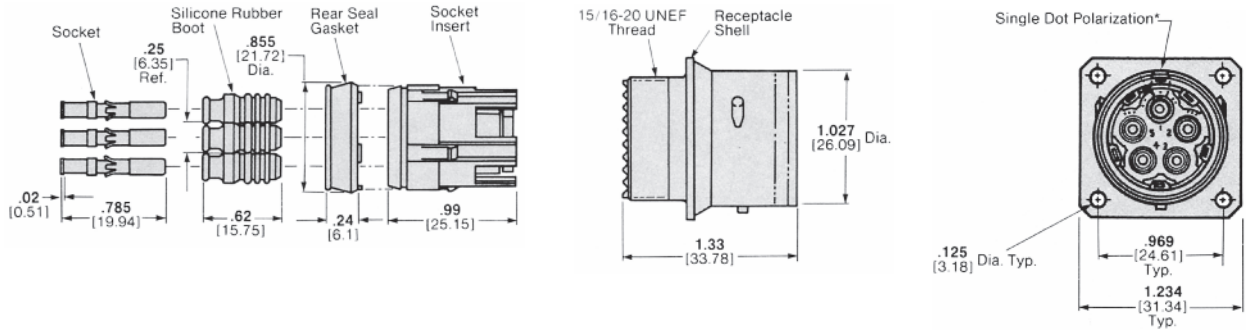

Plug

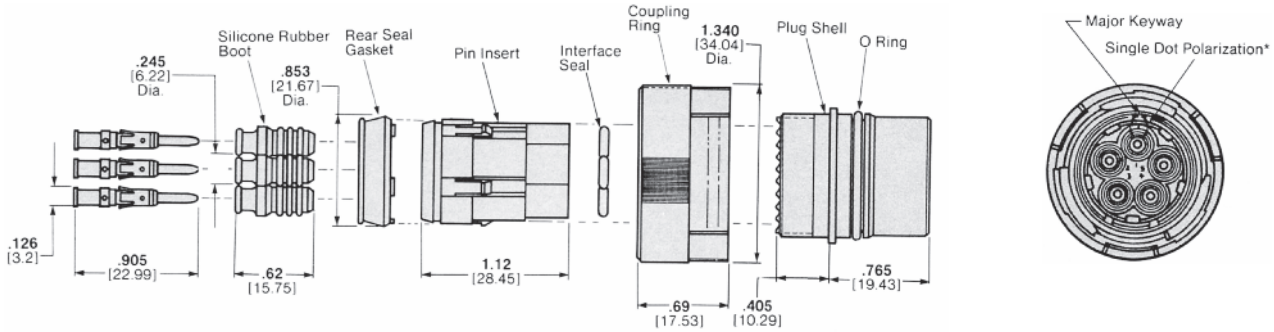

Shielded Cable Assembly

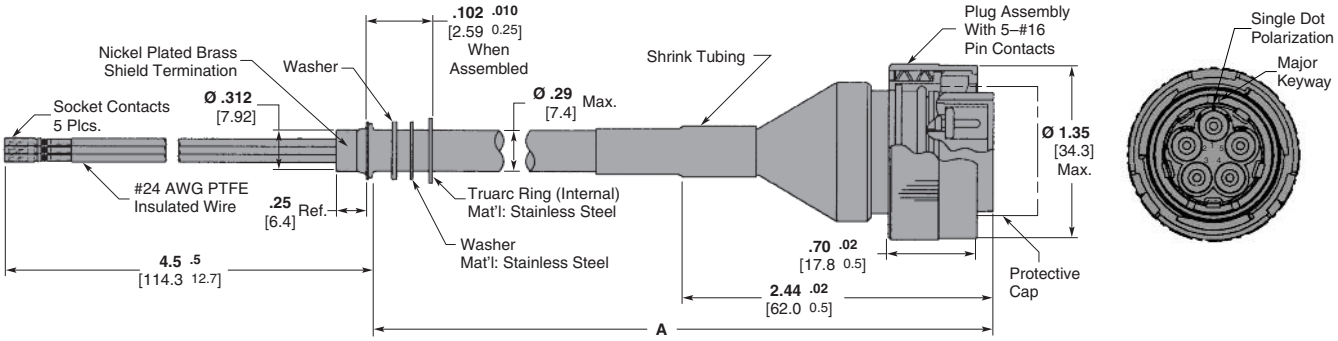

Dim. A	Part Number
12.60 ± .25 320.0 ± 6.4	864019-1
50.00 + 3.00 − 0.00 1270.0 + 76.2 − 0.0	864019-2
17.50 ± .50 444.5 ± 12.7	864019-3

Contact No.	Wire Color
1	Yellow
2	Black
3	Yellow
4	Brown
5	Red

Catalog 1308940
Revised 9-14

www.te.com

Dimensions are shown for reference purposes only. Specifications subject to change.

Dimensions are in millimeters unless otherwise specified.

USA: +1 800 522 6752
Asia Pacific: +86 0 400 820 6015
UK: +44 800 267 666

For additional support numbers please visit www.te.com

7-Pin, Metal-Shell Circular Connectors, Military-Type

Product Facts

- **15 KVDC operating voltage, up to 70,000 feet [21,336 m]**
- **Current carrying capacity — 7.5 A continuous per line for 20 AWG wire**
- **Metal shell available for complete shielding and rugged operation**
- **Molded-in Size 20 contacts are fully shrouded**
- **Molded glass epoxy and silicone rubber interface for positive sealing**
- **Polarized plug and receptacle housings help prevent mismating**
- **Designed to meet applicable specifications**
- **Hermetically sealed receptacles available**
- **Operating temperature range from -67°F to +257°F [-55°C to +125°C]**
- **Moisture resistant**
- **Corona resistant**

Instruction Sheet — 408-10113

AMP 7-Pin Miniature Circular Connectors, when properly assembled and mated, safely carry 15 KVDC (pin-to-pin and pin-to-ground) through a full range of military environmental requirements. The connectors can carry a continuous current of 7.5 amperes per line when terminated to 20 AWG wire. The receptacle is hermetic and can be mounted with an O-ring flange or solder flange for various industrial and military applications.

This connector family features size 20 gold-plated pins and sockets which are fully shrouded for safe handling, polarized housings to assure proper mating, and a molded glass epoxy and silicone rubber interface for positive sealing.

AMP 7-Pin Miniature Circular Connectors are available in a wide variety of configurations, including a metal shell version for RFI shielding and rugged handling.

Receptacle Lead Assembly

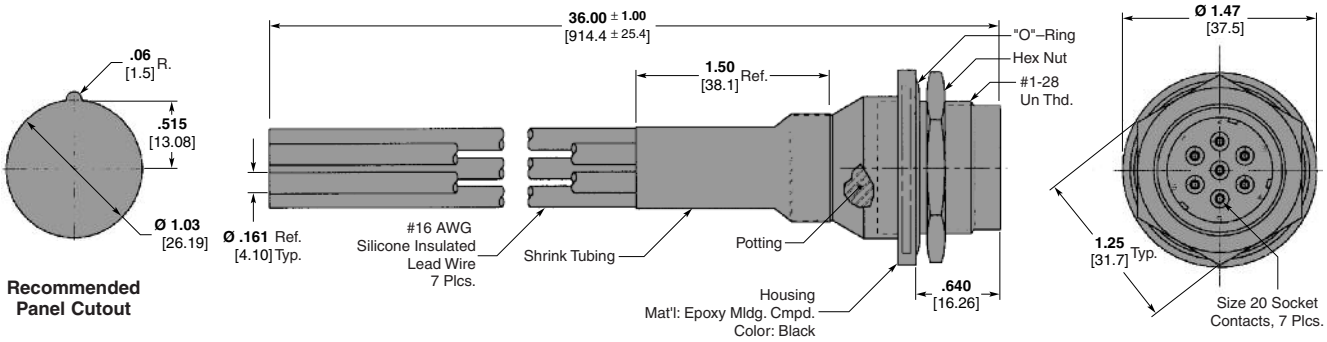

Part Number 867862-1
RoHS Part Number 5-867862-1

Catalog 1308940
Revised 9-14

www.te.com

Dimensions are shown for reference purposes only. Specifications subject to change.

Dimensions are in millimeters unless otherwise specified.

USA: +1 800 522 6752
Asia Pacific: +86 0 400 820 6015
UK: +44 800 267 666

For additional support numbers please visit www.te.com

7-Pin, Metal-Shell Circular Connectors, Military-Type (Continued)

Plastic Shell

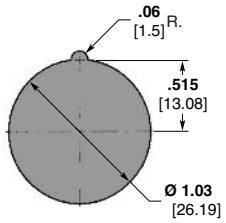

Panel Cutout for Receptacles

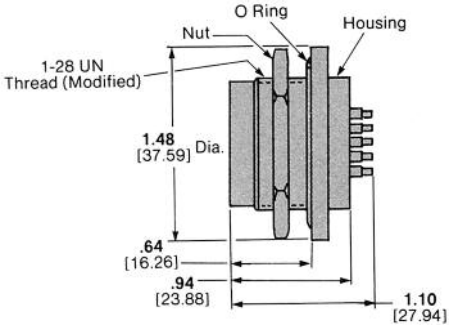

Potted Receptacle
Part Number 861999-1 (Non-hermetic)
Part Number 862794-1 (Hermetic Seal)

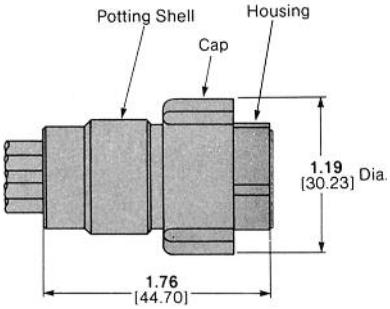

Potted Plug Kit
Part Number 865594-1

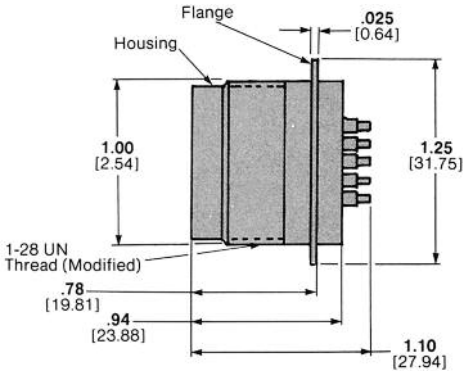

Receptacle for Hermetic Seal,
Solder-Flange-Mount
Part Number 862005-1

Potting Shells

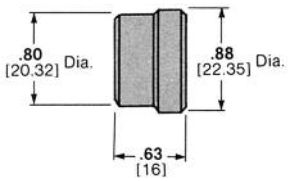

Plug Potting Shell
Part Number 862544-1

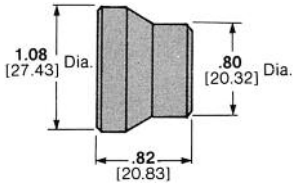

Receptacle Potting Shell
Part Number 862256-1

Metal Shell

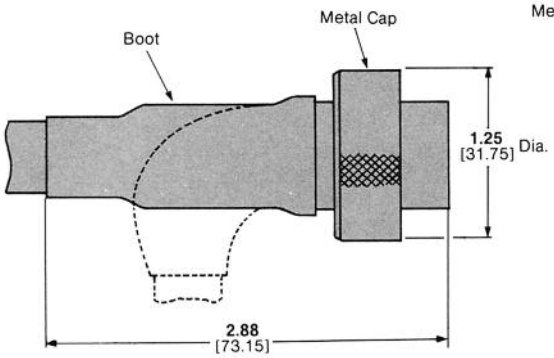

Plug Kit
Part Number 865656-1 (Straight Boot)
Part Number 865656-2 (Right-Angle Boot)
Part Number 865656-3 (No Boot)

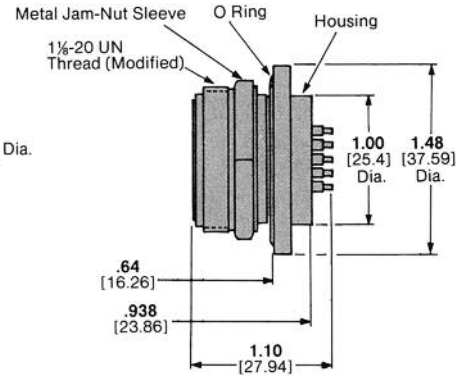

Receptacle
Part Number 862004-1 (Non-hermetic)
Part Number 866182-1 (Hermetic Seal)

Catalog 1308940
Revised 9-14

www.te.com

Dimensions are shown for reference purposes only. Specifications subject to change.

Dimensions are in millimeters unless otherwise specified.

USA: +1 800 522 6752
Asia Pacific: +86 0 400 820 6015
UK: +44 800 267 666

For additional support numbers please visit www.te.com

6-Pin, Subminiature Rectangular Connectors

Product Facts

- **Extremely lightweight — total weight of mated pair is less than 14 grams**
- **Compact design — requires less than .6 square inch [387 mm²] of mounting surface; occupies less than .750 cubic inch [.229 mm³] of volume per mated pair**
- **Quick connect/disconnect design**
- **Resilient silicone rubber insert in plug half provides positive interfacial seal for mated connector**
- **Withstands 10 KVDC hipot test**
- **Housing styles for potting, chassis slot (channel) mounting, panel mounting and free-hanging applications**
- **Lettered positions for easy circuit identification**
- **Size 22, gold plated contacts with 5 ampere rating accommodate 28 to 22 AWG [0.08 to 0.4 mm²] wire**
- **Connectors pre-assembled with leads, fully potted and tested**
- **6 KVDC at 70,000 ft. [21,336m]; -67°F to +257°F [-55°C to +125°C]operating storage temperature**
- **Flame retardant, glass reinforced thermoplastic polyester housings standard color, black**

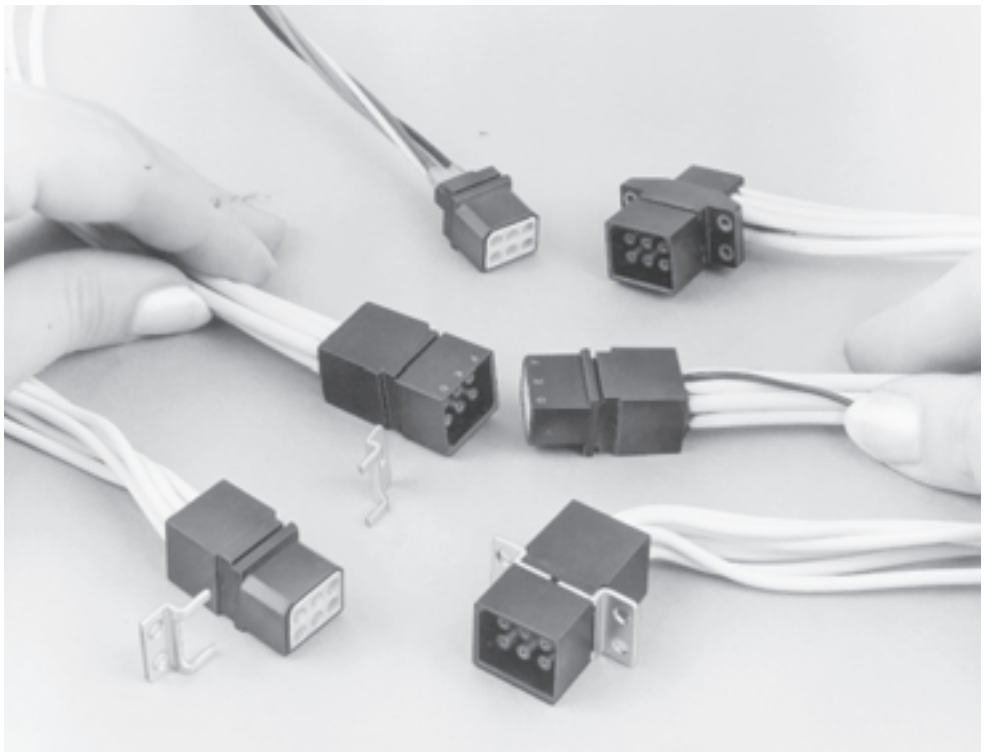

AMP Subminiature High Voltage Connectors are designed for use in electronic high voltage circuits, especially in critical applications and harsh environments. It is exceptionally lightweight and compact. Can be operated within a temperature range of -67°F to 257°F [-55°C to +125°C] and up to 6 KVDC at an altitude of 70,000 feet [21,336 meters].

The connector incorporates many features for electrical, mechanical and environmental integrity.

TE Connectivity supplies the Subminiature High Voltage Connector in a 6-position size, pre-assembled with silicone or PTFE insulation. For optimum versatility, connector housings are available for 180° (straight) or 90° (right-angle) rear-entry wiring and in a choice of styles for potting, chassis-slot (channel) mounting, panel mounting and free-hanging applications. Panel-mounted versions can be furnished either with separate “slip-on” metal mounting brackets or with a molded mounting flange that is an integral part of the connector. All connector styles are fully potted (and have been tested for environmental integrity and reliability of performance).

Material and Finish

Housings and Potting Shells — Thermoplastic polyester, glass-filled, flame retardant; standard color, black

Contacts — Beryllium copper; plated .000030 [0.00076] min. gold per MIL-G-45204, over .000030 [0.00076] min. nickel per QQ-N-290

Mounting Brackets — Carbon steel, nickel plated

Mounting Brackets, Slip-on (For Commercial or Military Assemblies with slotted housings)

Part Number 861214-2 — Two, .106 [2.69] Dia. Mounting Holes

Part Number 861215-2 — One, .106 [2.69] Dia. Mounting Hole

Catalog 1308940
Revised 9-14

www.te.com

Dimensions are shown for reference purposes only. Specifications subject to change.

Dimensions are in millimeters unless otherwise specified.

USA: +1 800 522 6752
Asia Pacific: +86 0 400 820 6015
UK: +44 800 267 666

For additional support numbers please visit www.te.com

6-Pin, Subminiature Rectangular Connectors (Continued)

Plug Assemblies and Kits

Flying Leads

Assembly A Lead Length	Assembly with 22 AWG Silicone
15.00 ± .50 381.0 ± 12.7	867622-1
24.00 ± .50 609.6 ± 12.7	867622-2

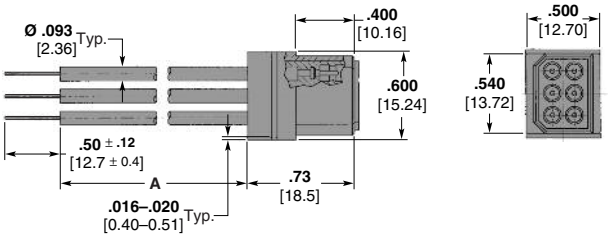

Pin No.	Wire Color
A	Yellow
B	Red
C	Brown
D	Blue
E	Green
F	Black

Molded Mounting Flange

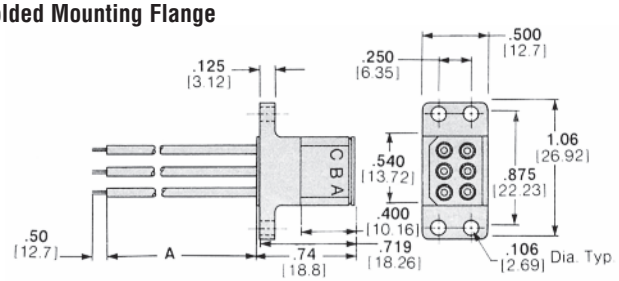

Assembly Lead Length A	Assembly with 22 AWG Silicone	Assembly with 24 AWG PTFE
12 304.8	867465-1 5-867465-1*	867464-1
24 609.6	867465-2 5-867465-2*	867464-2
36 914.4	867465-3 5-867465-3*	867464-3 5-867464-3*

*RoHS compliant Part Number.

Right-Angle

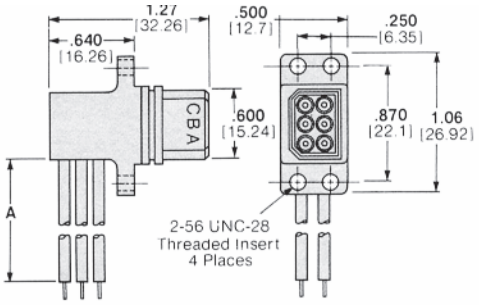

Kit Part Number
448479-1 Kit with Flange

Slotted Version with Potting Shell

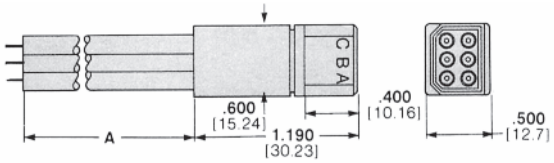

Kit Part Number	Assembly Lead Length A	Assembly with 22 AWG Silicone	Assembly with 24 AWG PTFE
867482-1	**12** 304.8	867463-1	867462-1
	24 609.6	867463-2 5-867463-2*	867462-2
	36 914.4	867463-3	867462-3

*RoHS compliant Part Number.

Dimensions are shown for reference purposes only. Specifications subject to change.

Dimensions are in millimeters unless otherwise specified.

USA: +1 800 522 6752
Asia Pacific: +86 0 400 820 6015
UK: +44 800 267 666

For additional support numbers please visit www.te.com

6-Pin, Subminiature Rectangular Connectors (Continued)

Receptacle Assemblies and Kits

Slotted

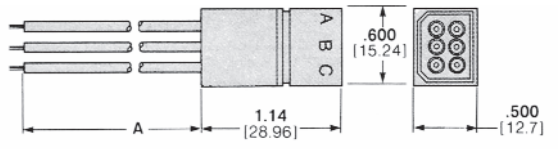

Kit Part Number	Assembly Lead Length A	Assembly with 22 AWG Silicone	Assembly with 24 AWG PTFE
867483-1	**12** 304.8	867469-1	867468-1 5-867468-1*
	24 609.6	867469-2	867468-2
	36 914.4	867469-3	867468-3 5-867468-3*

*RoHS compliant Part Number.

Color Coding

Leads are color coded as tabulated here. Other color leads can be used in custom assemblies.

Pin No.	Wire Color
A	Brown
B	Red
C	Green
D	Blue
E	Black
F	White

Molded Mounting Flange

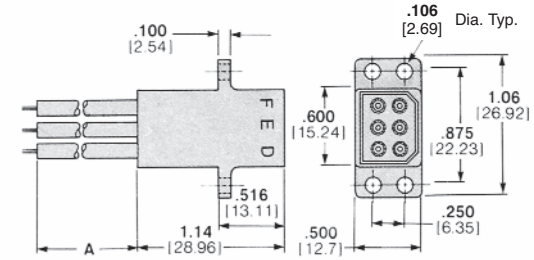

Flange can be placed elsewhere on housing. Consult TE Connectivity.

Kit Part Number	Assembly Lead Length A	Assembly with 22 AWG Silicone	Assembly with 24 AWG PTFE
867484-1	**12** 304.8	867473-1	867472-1 5-867472-1*
	24 609.6	867473-2 5-867473-2*	867472-2 5-867472-2*
	36 914.4	867473-3	867472-3

*RoHS compliant Part Number.

Right-Angle

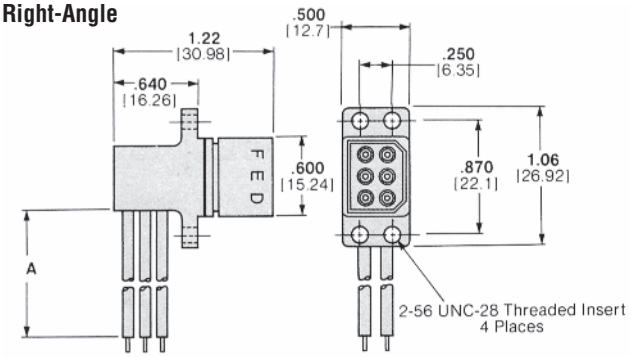

Kit Part Number	Assembly Lead Length A	Assembly with 22 AWG Silicone
866047-1	**12** 304.8	867477-1
	24 609.6	867477-2
	36 914.4	867477-3

Color Coding

Leads are color coded as tabulated here. Other color leads can be used in custom assemblies.

Pin No.	Wire Color
A	Brown
B	Red
C	Green
D	Blue
E	Black
F	White

Dimensions are shown for reference purposes only. Specifications subject to change.

Dimensions are in millimeters unless otherwise specified.

USA: +1 800 522 6752
Asia Pacific: +86 0 400 820 6015
UK: +44 800 267 666

For additional support numbers please visit www.te.com

6-Pin, Subminiature Rectangular Connectors (Continued)

Plug Assemblies

Posts Dia. .025 [0.64]

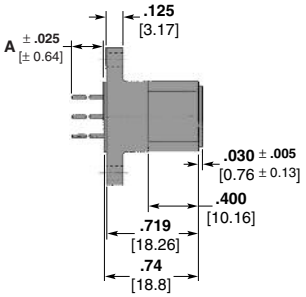

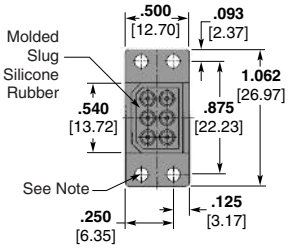

Dim. A	Part Number
.245 6.22	449810-1
.245 6.22	449810-2
.750 19.05	449810-3

Note: 449810-1 Dia. .106 [2.69], -2 and -3 inserts are #2-56.

Plug Assemblies with Flying Leads

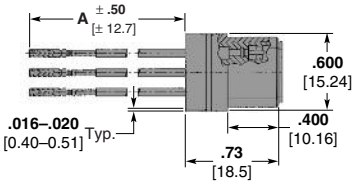

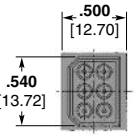

Dim. A	Lead Color	Letter Cavity	Part Number
4.00 101.6	Yellow	A	868021-1 5-868021-1*
4.00 101.6	Red	B	
4.00 101.6	Brown	C	
4.00 101.6	Blue	D	
4.00 101.6	Green	E	
13.00 330.2	Black	F	

*RoHS compliant Part Number.

Mounting Brackets

These brackets are for mounting commercial or military assemblies with slotted housings. They are not included in connector kits, nor with assemblies, and they must be ordered separately.

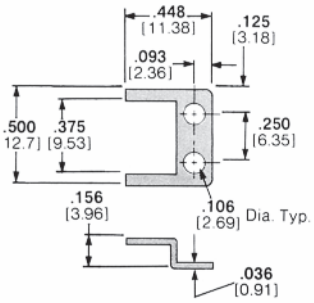

Part Number 861214-2

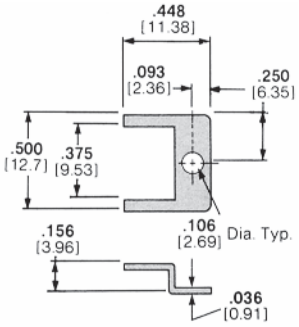

Part Number 861215-2

Flying Leads

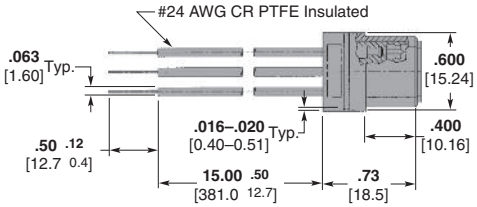

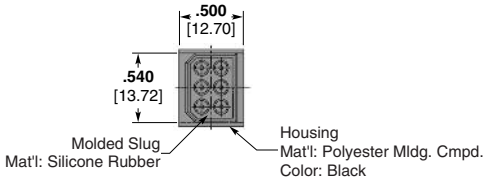

Part Number 867761-1

Pin No.	Wire Color
A	Yellow
B	Red
C	Brown
D	Blue
E	Green
F	Black

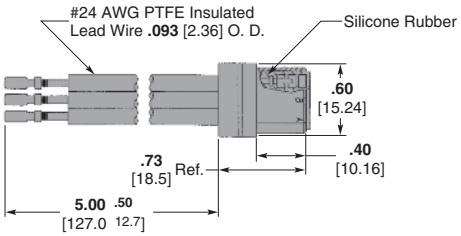

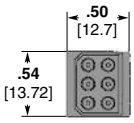

Part Number 445181-1

Socket No.	Wire Color
A	Black
B	Red
C	Brown
D	No Lead
E	Yellow
F	Green

Catalog 1308940
Revised 9-14

www.te.com

Dimensions are shown for reference purposes only. Specifications subject to change.

Dimensions are in millimeters unless otherwise specified.

USA: +1 800 522 6752
Asia Pacific: +86 0 400 820 6015
UK: +44 800 267 666

For additional support numbers please visit www.te.com

6-Pin, Subminiature Rectangular Connectors (Continued)

Receptacle Assemblies

Slotted

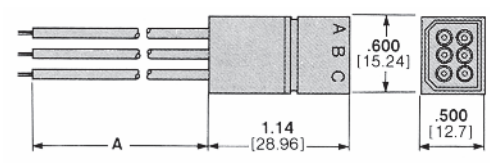

Assembly Lead Length A	Assembly with 22 AWG Silicone	Assembly with 24 AWG PTFE
12 304.8	867471-1 5-867471-1*	867470-1
24 609.6	867471-2	867470-2
36 914.4	867471-3	867470-3

*RoHS compliant Part Number.

Right-Angle

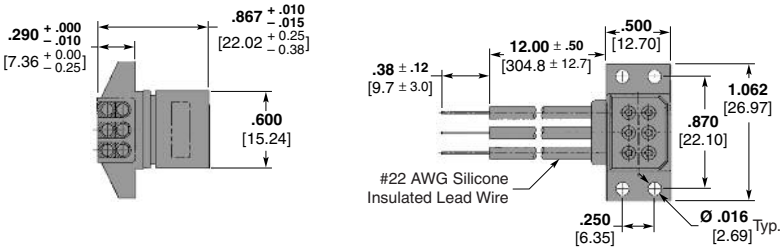

Part Number 443832-1
RoHS Part Number 5-443832-1

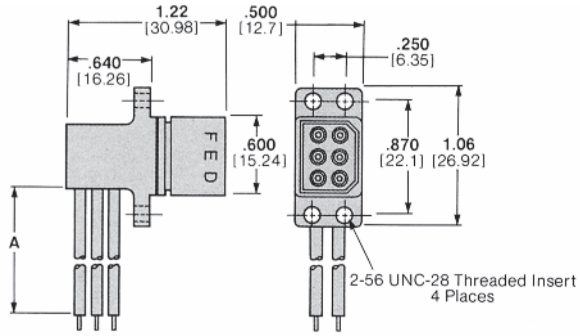

Assembly Lead Length A	Assembly with 22 AWG Silicone	Assembly with 24 AWG PTFE
12 304.8	867479-1 5-867479-1*	867478-1
24 609.6	867479-2 5-867479-2*	867478-2
36 914.4	867479-3	867478-3

*RoHS compliant Part Number.

Dimensions are shown for reference purposes only. Specifications subject to change.

Dimensions are in millimeters unless otherwise specified.

USA: +1 800 522 6752
Asia Pacific: +86 0 400 820 6015
UK: +44 800 267 666

For additional support numbers please visit www.te.com

LGH Micro-Miniature Connectors and Cable Assemblies

Product Facts

- **LGH leads and receptacles find wide application where high voltage is used in harsh environments**
- **Small high voltage power supplies**
- **Back lighting for LCD flat panel displays**
- **High voltage for flat panel FED (Field Emissive Displays)**
- **Small CRT's (Cathode Ray Tubes)**
- **Commercial and Military Avionics**
- **A series of miniature high voltage connectors for applications where space is limited**
- **HV performance in a small lightweight connector**
- **Operating voltages up to 12 KVDC**
- **Operation to 100,000 ft. [30,480 m] altitude**
- **Lead wire remains flexible to - 67°F [-55°C]**
- **Color coded for easy identification**
- **Leads are available with silicone, PTFE or silicone coated PTFE**
- **Connector is fully insulated**
- **Connectors are available with 26 thru 22 AWG wire**

Materials

Molded silicone rubber

Thermoset and thermoplastic polymers

Socket contacts size 22 per MIL-C-39029 size 22

Electrical Characteristics

Operating Voltage — up to 12 KVDC

Current Rating — 5 amps max. with 22 GA wire

Mechanical Characteristics

Small size outside Dia. of .135 [3.43]

Leads are preassembled

Quick disconnect, push/pull mating

Operating Temperature — -67°F to +257°F [-55°C to +125°C]

Approvals

Meets applicable military specifications

AMP product specifications listed below

Technical Documents

135 Series (.135 [3.43] Dia.) — 108-1788

170 Series (.179 [4.55] Dia.) — 108-1802

240 Series (.240 [6.10] Dia.) — 108-1853

Surface Mount/Plug Assembly — 108-1880

1, 2, and 3 Position — 108-1812

LGH Micro-Miniature Connectors and Cable Assemblies (Continued)

170 Series

Product Specification — 108-1802
Operating Voltage — 6 KVDC
Test Voltage — 10 KVDC at 10,000 feet [3,046 m] and -67°F to +257°F [-55°C to +125°C]
Durability — 50 matings and unmating

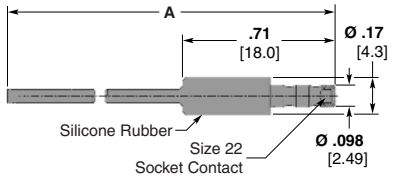

Plug

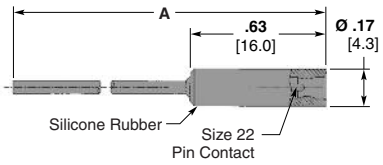

Receptacle

Wire Description	Wire Color	Plug		Receptacle	
		Dim. A	Part Number	Dim. A	Part Number
24 AWG Silicone Coated FEP	Red	**12.5 ± .12** 317.5 ± 3.0	1218147-1	**12.0 ± .12** 304.8 ± 3.0	1218148-1
				48.0 ± .48 1219.2 ± 12.2	1218148-2

1, 2 and 3 Position

Product Specification — 108-1812
Operating Voltage — 7.5 KVDC
Test Voltage — 12 KVDC at 10,000 feet [3,048 m] and 5°F to +185°F [-15°C to +85°C]

3-Position Connectors

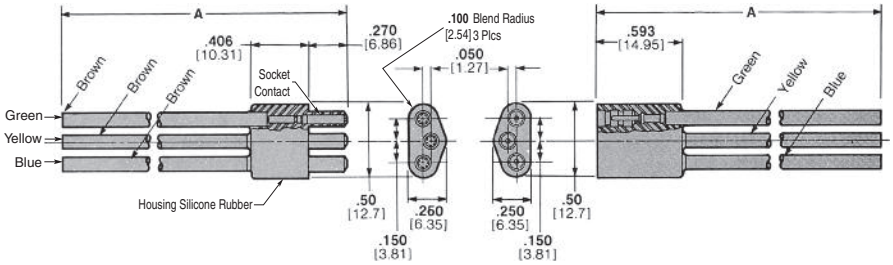

Plug

Dim. A	Wire Color	Part Number
12 305	Brown Brown Brown	863743-1
16 406		863743-2
12 305	Green Yellow Blue	862424-1
18 457		862424-2
48 1219		862424-4

Receptacle

Dim. A	Part Number
12 305	862425-1
18 457	862425-2
24 610	862425-3
48 1219	862425-4

Dimensions are shown for reference purposes only. Specifications subject to change.

Dimensions are in millimeters unless otherwise specified.

USA: +1 800 522 6752
Asia Pacific: +86 0 400 820 6015
UK: +44 800 267 666

For additional support numbers please visit www.te.com

LGH Micro-Miniature Connectors and Cable Assemblies (Continued)

1, 2 and 3 Position (Continued)

Product Specification — 108-1812
Operating Voltage — 7.5 KVDC
Test Voltage — 12 KVDC at 10,000 feet [3,048 m] and -5°F to +185°F [-15°C to +85°C]

2-Position Connectors

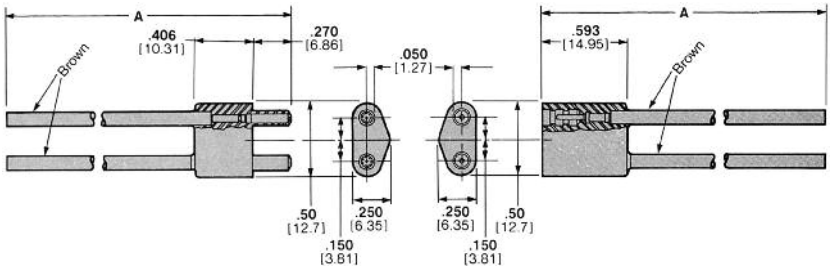

Plug

Dim. A	Part Number
12 305	866559-1
16 406	866559-5
18 457	866559-2
24 610	866559-3
48 1219	866559-4

Receptacle

Dim. A	Part Number
12 305	866196-1
16 406	866196-5
18 457	866196-2
24 610	866196-3
48 1219	866196-4

1-Position Connectors

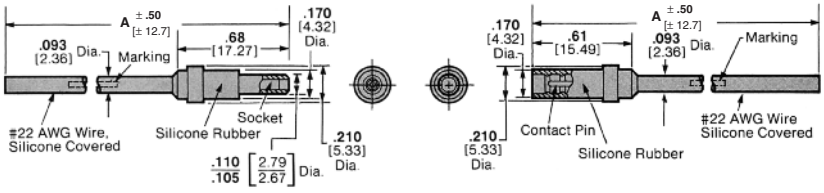

Plug

Dim. A	Wire Color	Part Number
15 381	White	867823-1
30 762	White	867823-2
36 914	Green	867823-3
36 914	White	867823-4
6 152	White	867823-5
40 1016	White	867823-6

Receptacle

Dim. A	Wire Color	Part Number
24 610	White	867824-1
24 610	Green	867824-2
6 152	White	867824-3
40 1016	White	867824-4

Catalog 1308940
Revised 9-14

www.te.com

Dimensions are shown for reference purposes only. Specifications subject to change.

Dimensions are in millimeters unless otherwise specified.

USA: +1 800 522 6752
Asia Pacific: +86 0 400 820 6015
UK: +44 800 267 666

For additional support numbers please visit www.te.com

Medical Receptacles (Used Primarily for Patient Monitoring)

Product Facts

- **Quick connect/disconnect**
- **6 and 7 position connector**
- **Mates to standard medical cable interface**
- **Operating Voltage — up to 5,000 volts DC**
- **Operating Temperature — -5°F to 185°F [-15°C to 85°C]**
- **Operating Current — 10 Amps max.**
- **Accepts AMP Multi-Mate Pins and Sockets (size 16)**
- **Four hole flange mount**
- **Housings made from UL 94V-0 polyester material**
- **Different colors available**
- **Polarized for proper mating of connector halves**
- **TE Connectivity does not manufacture mating plugs or cable assemblies for these receptacles**

The AMP line of LGH high voltage products is meeting today's need for medical instrumentation connectors and is prepared for tomorrow's medical breakthroughs.

In use today in a wide variety of medical monitoring equipment, this versatile LGH circular connector offers the industry a wide choice of application options.

Typical Applications

- Medical monitoring equipment
- Mates with "standard" medical cable assemblies

Versatility

- Choice of crimp or posted, size 16 gold over nickel plated contacts
- Flange mounted for easy installation
- Polarized for safe, positive mating
- Housings available in choice of colors to meet your application

Catalog 1308940
Revised 9-14

www.te.com

Dimensions are shown for reference purposes only. Specifications subject to change.

Dimensions are in millimeters unless otherwise specified.

USA: +1 800 522 6752
Asia Pacific: +86 0 400 820 6015
UK: +44 800 267 666

For additional support numbers please visit www.te.com

Medical Receptacles (Used Primarily for Patient Monitoring) (Continued)

7 Position
Housing only no contacts

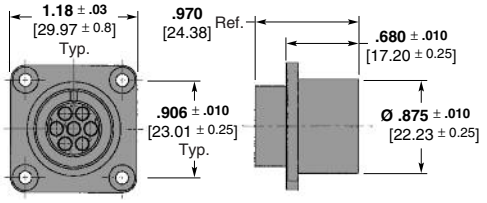

Housing Color	Part Number
Black	443065-1
Special Aqua Blue*	443065-3

*PMS (Pantone Matching System) #3145 Uncoated.

6 Position
Socket contacts with .025 [0.63] Square Posts

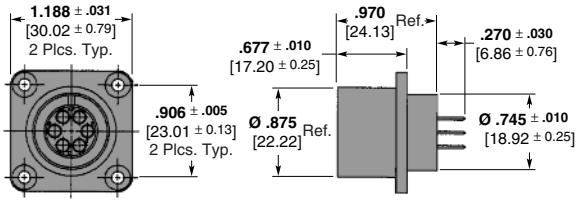

Part Number 447913-1
RoHS Part Number 5-447913-1

6 Position
Pin contacts with .025 [0.63] Square Posts

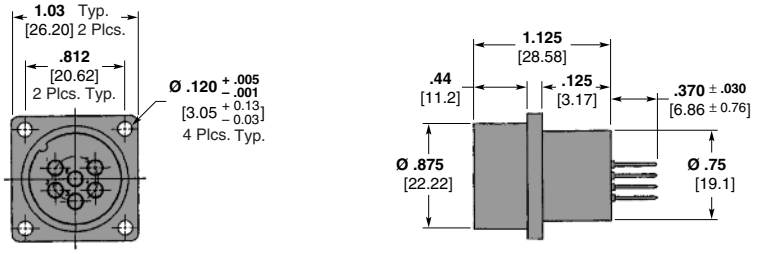

Part Number 447914-1
RoHS Part Number 5-447914-1

6 Position
14S–6S

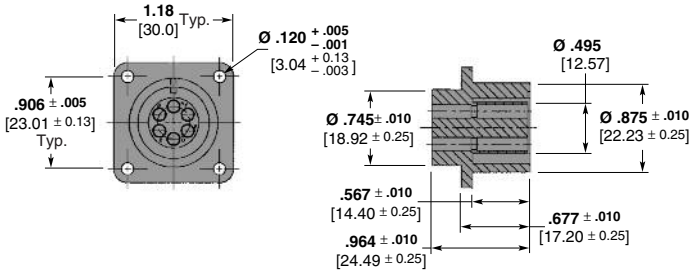

Part Number 449652-1

6 Position
MS3102A-14S-6S Configuration

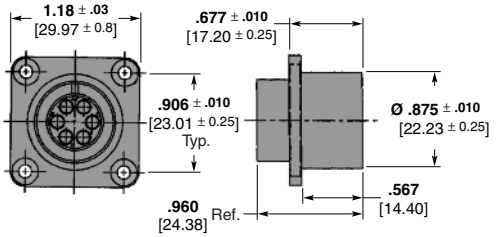

Part Number 864900-1
RoHS Part Number 5-864900-1
(Supplied with Contacts)

Part Number 864900-2
(Supplied without Contacts)

6 Position
Special 4mm Recess

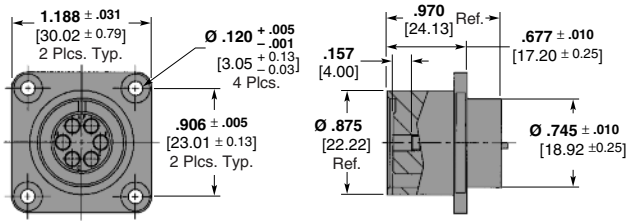

Part Number 1218081-1

Dimensions are shown for reference purposes only. Specifications subject to change.

Dimensions are in millimeters unless otherwise specified.

USA: +1 800 522 6752
Asia Pacific: +86 0 400 820 6015
UK: +44 800 267 666

For additional support numbers please visit www.te.com

Various Specials

Product Facts

6 Position LGH Connector

- Laser gyro inertial reference systems application
- Extremely rugged construction
- High flexibility silicone leads
- Size 22 contacts
- No adhesives or potting materials used
- 10,000 volts DC max. operating voltage

3 Position LGH Compact Flange Mounted Connector

- Military counter measure systems application
- Missile guidance systems application
- Ultra small diameter silicone coated PTFE wire insulation
- Size 22 contacts
- Plug is available as a kit or with flying leads
- 5,000 volts DC max. operating voltage

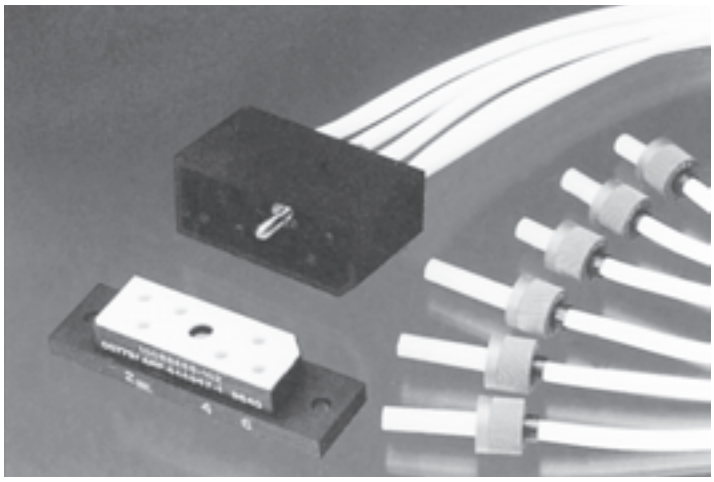

6 Position LGH Connector

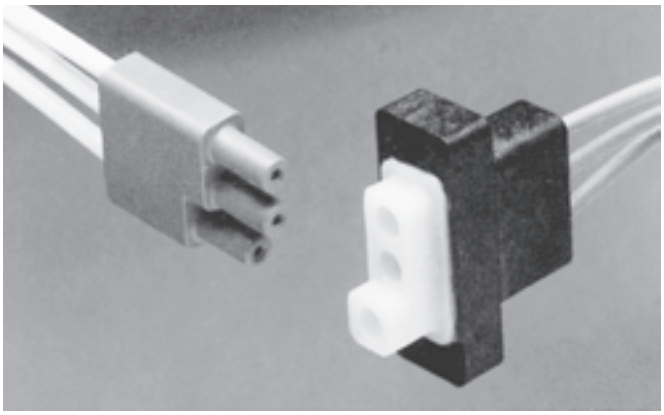

3 Position LGH Connector

6 Position LGH Connector brings high voltage to the circuit board

6 LGH leads, insert molded into a glass epoxy housing with a sturdy, center male screwlock form the plug of this extraordinary printed circuit connector system.

3 Position LGH Compact Flange Mounted Connector

Three molded in flying leads in an extremely tough liquid crystal polymer flanged housing make up the receptacle of this compact high performance high voltage connector.

Performance Specifications

Operating Temperature Range — -67°F to +257°F [-55°C to +125°C]

Operating Altitude Range — Sea level to 70,000 ft [21336 m].

Operating Current — 5 amps max.

Polarized interface to assure correct mating

Catalog 1308940
Revised 9-14

www.te.com

Dimensions are shown for reference purposes only. Specifications subject to change.

Dimensions are in millimeters unless otherwise specified.

USA: +1 800 522 6752
Asia Pacific: +86 0 400 820 6015
UK: +44 800 267 666

For additional support numbers please visit www.te.com

Various Specials (Continued)

6 Position, 10 KVDC Receptacle, with LGH 1/2 L and LGH 1/2 Positive Stop Leads

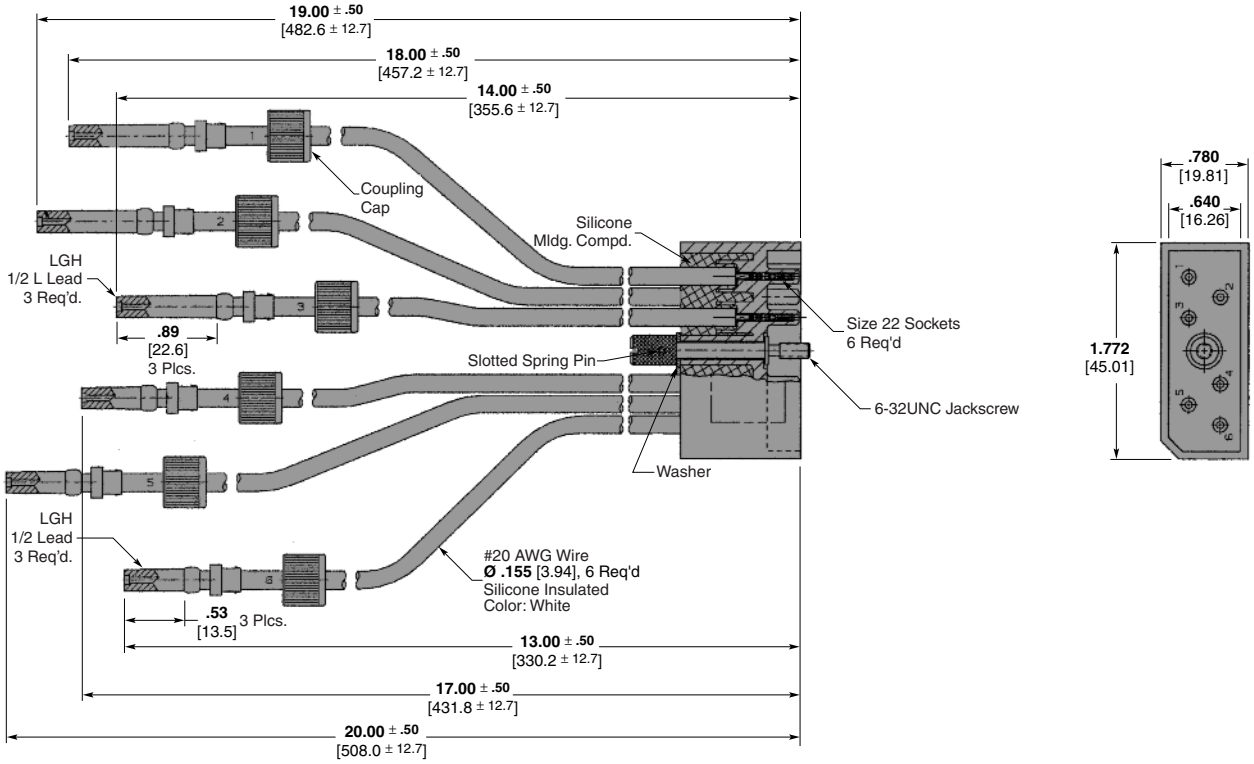

Part Number 446775-1

6 Position, Rectangular Receptacle

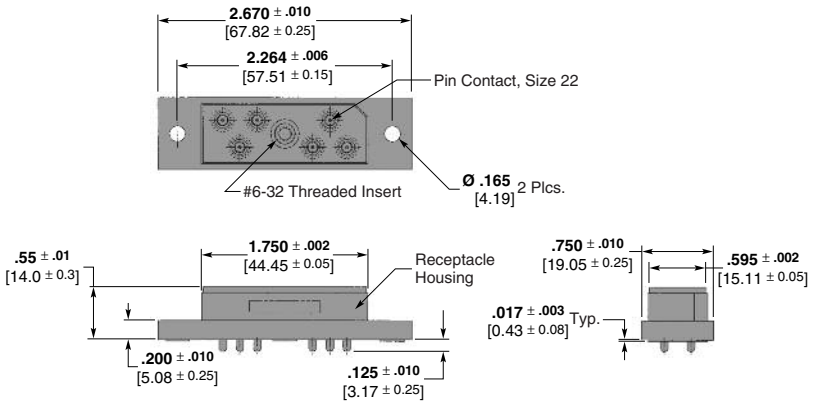

Part Number 446947-1

Dimensions are shown for reference purposes only. Specifications subject to change.

Dimensions are in millimeters unless otherwise specified.

USA: +1 800 522 6752
Asia Pacific: +86 0 400 820 6015
UK: +44 800 267 666

For additional support numbers please visit www.te.com

Various Specials (Continued)

3 Position Receptacles

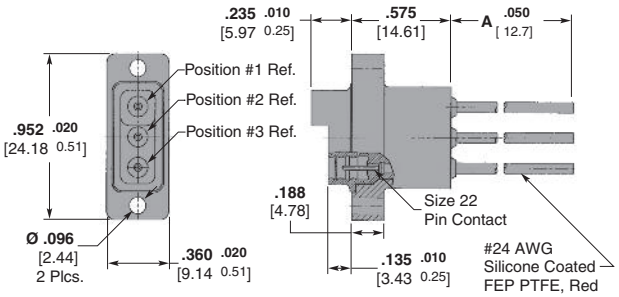

Dim. A	Part Number
24.00 609.6	443915-1
18.50 469.9	443915-2

Part Numbers 443915-1, -2

3 Position Plug

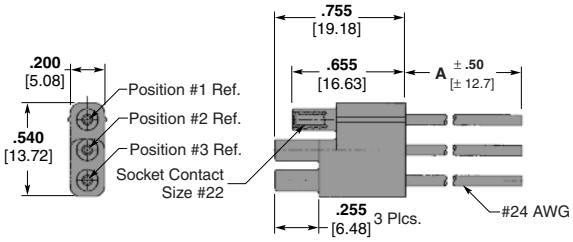

Dim. A	Part Number
24.00 609.6	443916-1
48.00 1219.2	443916-2

Part Numbers 443916-1, -2

3 Position Plug Kit with 3 Size 22 Socket Contacts

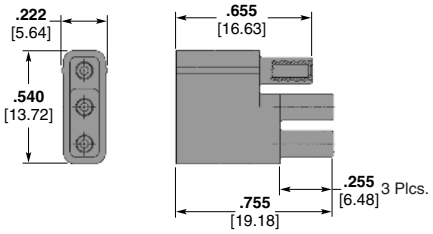

Part Numbers 446900-1 and 446900-2 with Slot

3 Position Receptacle

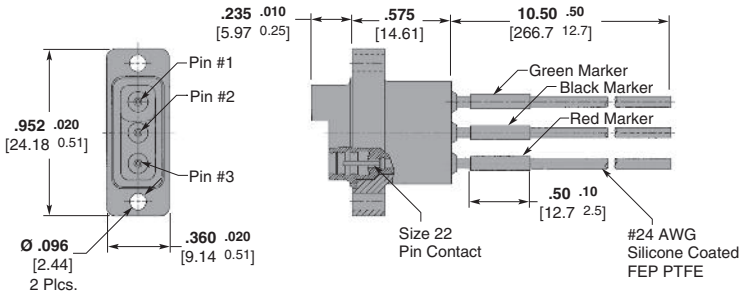

Part Number 443815-1

Dimensions are shown for reference purposes only. Specifications subject to change.

Dimensions are in millimeters unless otherwise specified.

USA: +1 800 522 6752
Asia Pacific: +86 0 400 820 6015
UK: +44 800 267 666

For additional support numbers please visit www.te.com

Various Specials (Continued)

Printed Circuit Board Receptacles

Product Facts

- **Molded epoxy housings per MIL-M-24357 (GEI-5)**
- **Small, lightweight, leakproof**
- **10 KV, LGH 1/2**
  Part Number 866803-1 (with mounting holes)
  Part Number 866804-1 (with threaded mounting holes and potting shell)
- **15 KV, LGH 1/2L**
  Part Number 866806-1 (with mounting holes)
  Part Number 866805-1 (with threaded mounting holes and potting shell)
- **20 KV, LGH 1**
  Part Number 830632-3 (with mounting holes)

Multiple Receptacle with Integral, Molded Flange for Bulkhead Applications (Gold Pins)

Single, Part Number 867606-4

Dual, Part Number 861662-4

Triple, Part Number 861660-4

Quadruple, Part Number 861658-4

Quintuple, Part Number 861657-4

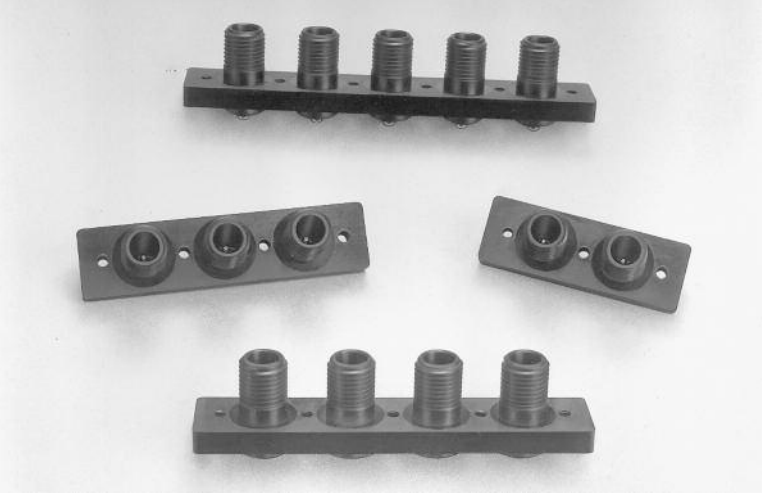

Catalog 1308940
Revised 9-14

www.te.com

Dimensions are shown for reference purposes only. Specifications subject to change.

Dimensions are in millimeters unless otherwise specified.

USA: +1 800 522 6752
Asia Pacific: +86 0 400 820 6015
UK: +44 800 267 666

For additional support numbers please visit www.te.com

Various Specials (Continued)

CRT Lead Assemblies

J1-21, 10 KV, LGH 1/2

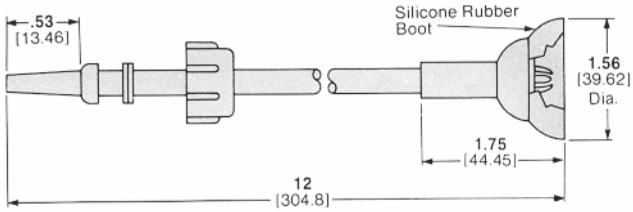

Part Number 848816-2

J1-21, 25 KV, LGH 1L

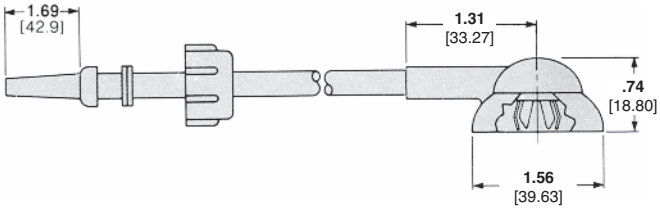

Assembly Length	Part Number
12 304.8	846977-8
18 457.2	1-846977-1

J1-21, 20 KV, LGH 1

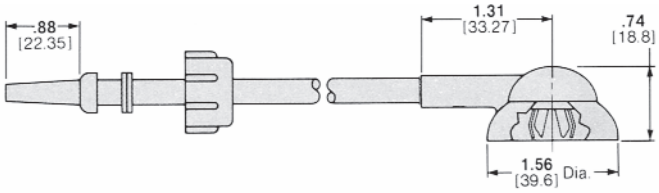

Part Number 848588

Assembly Length	Part Number
6 152.4	848588-7
12 304.8	848588-1
18 457.2	848588-4
24 609.6	848588-2
36 914.4	848588-3
48 1219.2	848588-8

J1-21, CRT, LGH 1L

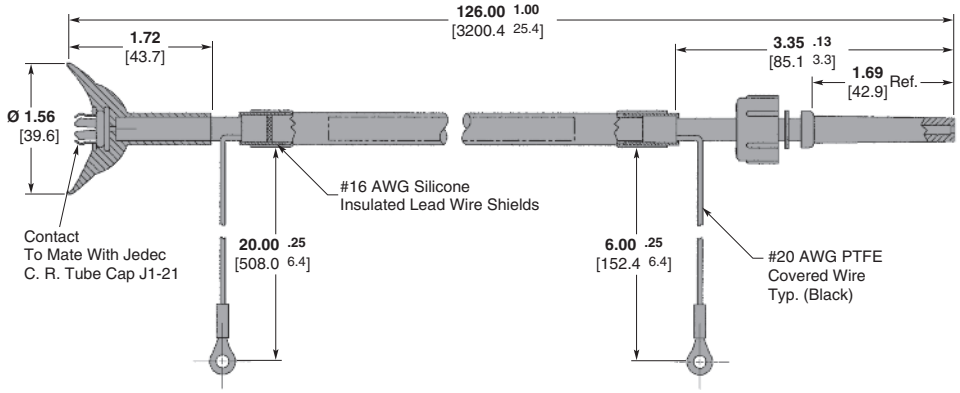

Part Number 867615-2

Note: Standard length leads are tabulated here. TE Connectivity can make available numerous variations in lengths and material to suit almost any application. Choices of insulation materials include PTFE, UL listed silicone and UL listed PVC. Other materials, colors, wire and configurations can be used in manufacture. For more information, consult TE.

Catalog 1308940
Revised 9-14

www.te.com

Dimensions are shown for reference purposes only. Specifications subject to change.

Dimensions are in millimeters unless otherwise specified.

USA: +1 800 522 6752
Asia Pacific: +86 0 400 820 6015
UK: +44 800 267 666

For additional support numbers please visit www.te.com

Various Specials (Continued)

CRT Lead Assemblies
(Continued)

J1-22, 10 KV, LGH 1/2 Right-Angle

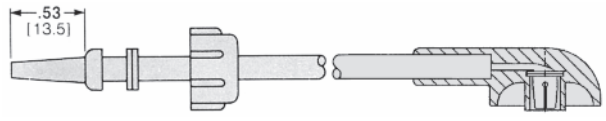

Part Number 846556

Assembly Length	Part Number
12 304.8	846556-3
18 457.2	846556-5
24 609.6	846556-4

J1-22, 15 KV, LGH 1/2L

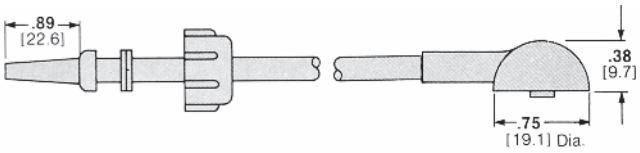

Part Number 862345

Assembly Length	Part Number
12 304.8	862345-2
18 457.2	862345-1

J1-22, 20 KV, LGH 1

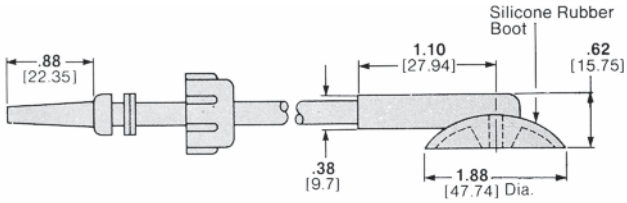

Part Number 849424

Assembly Length	Part Number
12 304.8	849424-7
18 457.2	849424-4 5-849424-4*

*RoHS compliant Part Number.

J1-22, 50 KV, LGH 4

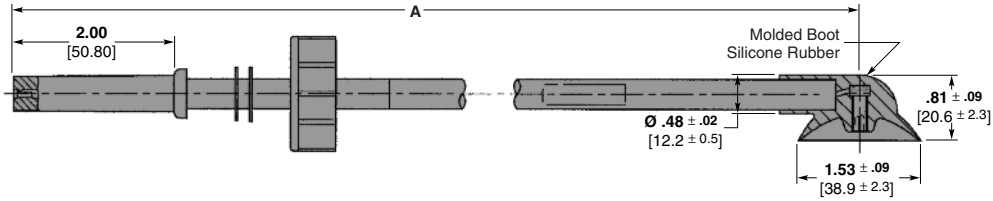

Part Numbers 868373-1, -2

Assembly Length	Part Number
36.0 ± .36 914.4 ± 9.1	868373-1
24.0 ± .36 609.6 ± 9.1	868373-2

Note: Standard length leads are tabulated here. TE Connectivity can make available numerous variations in lengths and material to suit almost any application. Choices of insulation materials include PTFE, UL listed silicone and UL listed PVC. Other materials, colors, wire and configurations can be used in manufacture. For more information, consult TE.

Dimensions are shown for reference purposes only. Specifications subject to change.

Dimensions are in millimeters unless otherwise specified.

USA: +1 800 522 6752
Asia Pacific: +86 0 400 820 6015
UK: +44 800 267 666

For additional support numbers please visit www.te.com

Various Specials (Continued)

CRT-Base Connectors

Product Facts

- **Base connections without potting**
- **Right-angle and straight connections available**
- **One-piece molded construction**
- **Environmentally sealed for trouble-free performance**
- **Operates at rated DC voltages at 70,000 ft. [21,336 m]**
- **Operating temperature range: -67°F to +257°F [-55°C to +125°C]**
- **Withstands shock tests per MIL-STD-202, Test Method 102, Condition C**
- **Excellent system serviceability**
- **High reliability**
- **Fully tested harnesses**
- **Lower applied cost**

AMP molded silicone rubber CRT-base connectors are designed to better eliminate the hand wiring approach for CRT-base connections. These connectors offer greater system serviceability and feature highly reliable performance with complete versatility. They have integrally molded high and low voltage leads, as dictated by particular applications, and a molded boot design which promotes dust and moisture resistance over a long operational life span.

The versatility of the connector design allows customers to purchase either fully wired connectors, or connectors which can be terminated and potted at their plant. Currently, LGH molded silicone rubber CRT-base connectors are available for a variety of standard 9, 12 and 14 pin tubes. Options include a choice of wire, both low and high voltage, as well as the direction of wire exiting from the connector. Each harness is fully tested prior to shipment.

In addition to the connectors listed here, TE Connectivity can furnish a wide variety of CRT-base connectors. Consult TE for details.

Catalog 1308940
Revised 9-14

www.te.com

Dimensions are shown for reference purposes only. Specifications subject to change.

Dimensions are in millimeters unless otherwise specified.

USA: +1 800 522 6752
Asia Pacific: +86 0 400 820 6015
UK: +44 800 267 666

For additional support numbers please visit www.te.com

Various Specials (Continued)

CRT-Base Connectors
(Continued)

9 Position CRT-Base Connector

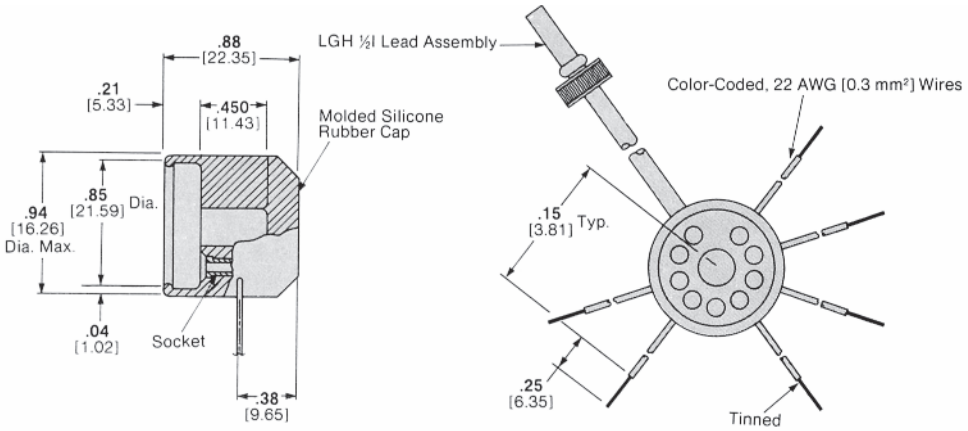

Part Number 862481-1

This connector is one of many available from TE Connectivity for mating with standard JEDEC tube base E9-37.

Typical Right-Angle Lead Exit CRT-Base Connector

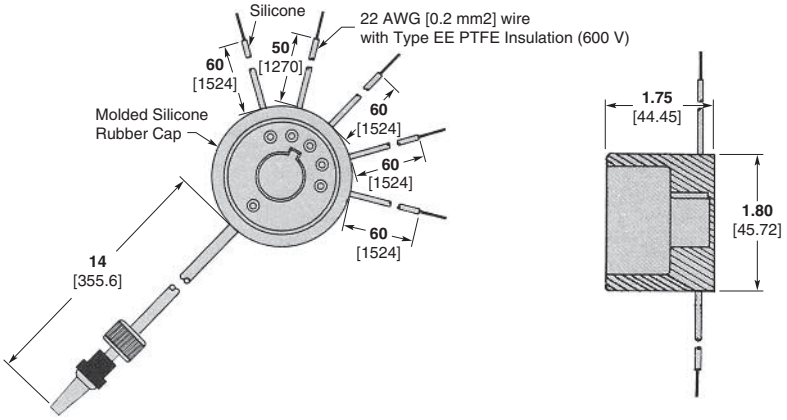

B6-63 —
Part Number 867121-1

This connector is typical of those available from TE for mating with standard JEDEC tube base B5-57, B6-63, B7-51, B10-75, and B12-43.

11 Position CRT-Base Connector

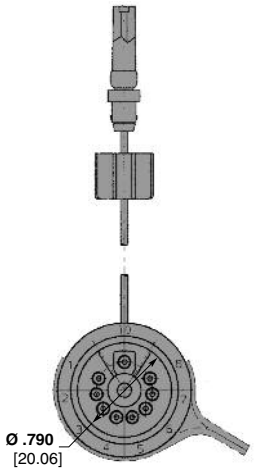

Part Number 443118-2

This connector is one of several available from TE for mating with standard JEDEC tube base B9-290. In addition to the connectors listed here, TE can furnish a wide variety of CRT-base connectors. Consult TE for details.

Dimensions are shown for reference purposes only. Specifications subject to change.

Dimensions are in millimeters unless otherwise specified.

USA: +1 800 522 6752
Asia Pacific: +86 0 400 820 6015
UK: +44 800 267 666

For additional support numbers please visit www.te.com

Various Specials (Continued)

Rack and Panel Connectors

Product Facts

- **10 KVDC rating up to 10,000 feet [3,048 m] (continuous)**
- **Extremely compact**
- **All plastic design**
- **Housings can be molded from a variety of materials**
- **Provides highly reliable drawer-type connections**
- **Low insertion and extraction forces**
- **Hipot — 20 KVDC at sea level, two minutes**
- **Pins and sockets (10-amp rating) are recessed for maximum safety; will accept conductor sizes to 16 AWG [1.25 mm²]**
- **Hermetically sealed version available for soldering to metal bulkhead on single pin connector**
- **Available with or without leads**
- **No tools required for field use**
- **Can be readily adapted for in-line splice applications**

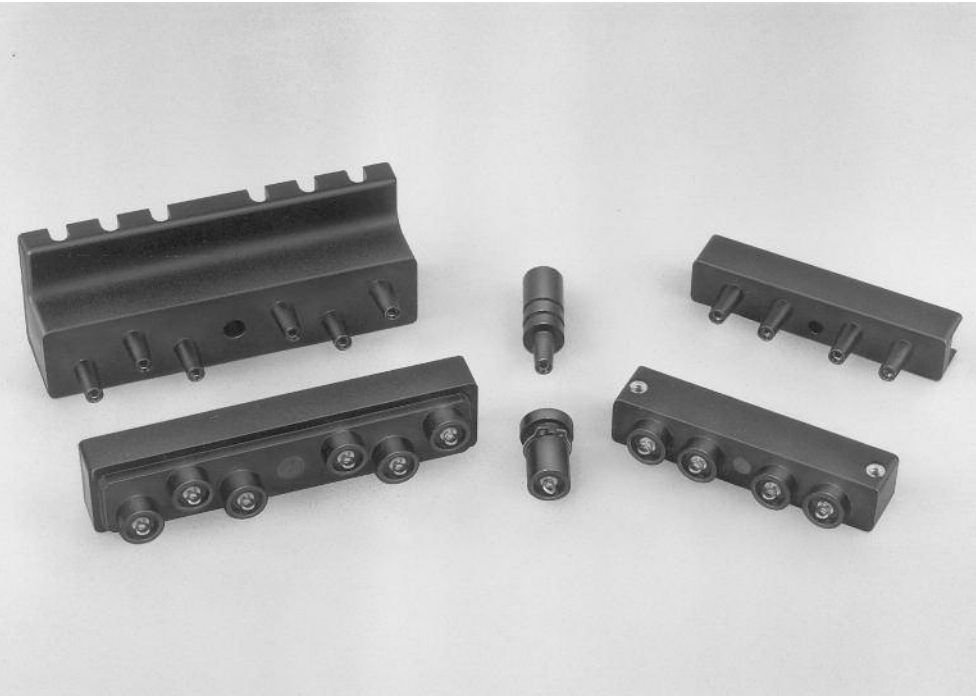

This AMP High Voltage Connector family is specifically designed for military applications. It is extremely compact and has a continuous 15 KVDC rating from sea level to an altitude of up to 10,000 feet [3,048 m].

The connector assembly is a rack and panel type especially suited for drawer mounting or free-hanging plug applications. It incorporates many design features for electrical, mechanical and environmental integrity. Such features include: use of a tapered plug to make exact alignment unnecessary; recessed pin and socket contacts to better prevent high voltage exposure; and a resilient silicone rubber "O" ring in the receptacle for an interfacial seal for the mated connector.

Plug and receptacle housings are molded from durable glass epoxy; pin and socket contacts are made of fine grade brass, gold plated in the mating areas for maximum conductivity. The solder eyelets are capable of accommodating leads with conductor sizes up to 16 AWG [1.25 mm²].

To meet customer's exact requirements, we can supply the High Voltage Rack and Panel Connectors with or without leads. Also, because of the basic design of the connectors, slight modifications can be made for in-line space applications.

Materials

Housings — Molded glass epoxy per MIL-M-24325 (Ships), GEI-5

Pin and Socket Contacts — Brass; gold plated per MIL-G-45204

Solder Eyelets — Pre-tinned per MIL-T-10727

"O" Ring (Receptacle Only) — Silicone Rubber

Retaining Ring (Receptacle Only) — Stainless steel per MS 16624

Catalog 1308940
Revised 9-14

www.te.com

Dimensions are shown for reference purposes only. Specifications subject to change.

Dimensions are in millimeters unless otherwise specified.

USA: +1 800 522 6752
Asia Pacific: +86 0 400 820 6015
UK: +44 800 267 666

For additional support numbers please visit www.te.com

Various Specials (Continued)

Rack and Panel Connectors
(Continued)

Single Pin

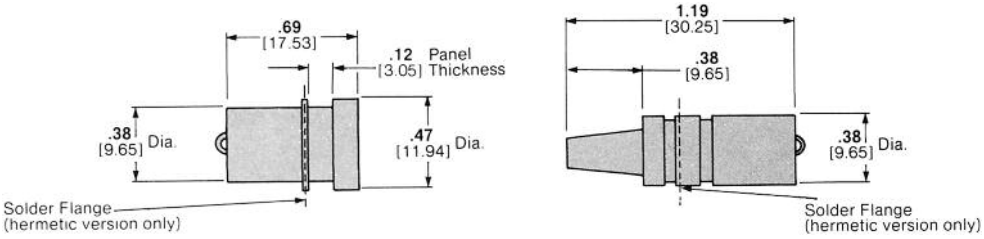

Receptacle
Standard Part Number 859111-1
Hermetic Part Number 862123-1

Plug
Standard Part Number 859113-1
Hermetic Part Number 862124-1

Four Pin

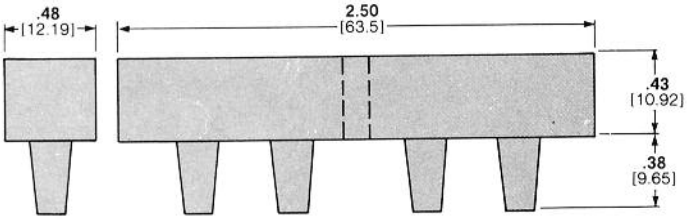

Plug
Part Number 862908-1

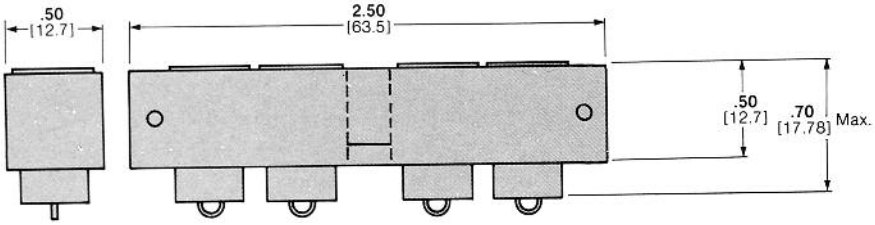

Receptacle
Part Number 862909-1

Six Pin

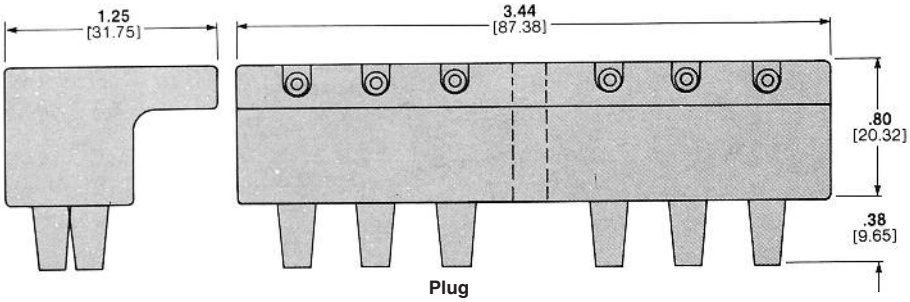

Plug
Part Number 862672-1

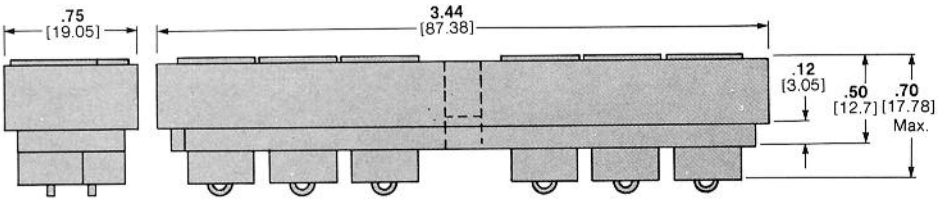

Receptacle
Part Number 862536-1

Notes: 1. If bulkhead and mounting hardware are metallic and at ground potential, provisions must be made to protect the back end of the receptacle against arc-over and breakdown.
2. Connectors are available with or without leads. Leads can be furnished in virtually any length, with various insulation materials, in either standard white or a variety of optional colors, and with conductor sizes to 16 AWG [1.25 mm^2].

For the High Voltage Rack and Panel Connector to meet your specific requirements, consult TE Connectivity.

Dimensions are shown for reference purposes only. Specifications subject to change.

Dimensions are in millimeters unless otherwise specified.

USA: +1 800 522 6752
Asia Pacific: +86 0 400 820 6015
UK: +44 800 267 666

For additional support numbers please visit www.te.com

Various Specials (Continued)

Heavy Duty (VRL) RFI-Shielded Lead Assemblies and Receptacles

Product Facts

- **Extremely rugged design**
- **Fully shielded against RFI**
- **Operating and storage temperature range: -67°F to +257°F [–55°C to +125°C]**
- **Meets wide range of military requirements**
- **Metal housings can be readily altered to meet a wide variety of mounting and operational requirements**

Versatile ruggedized LGH High Voltage Lead Assemblies and Receptacles are designed specifically for use where vibration, shock and handling conditions exist and are ideally suited for both industrial and military applications. This line of lead assemblies and receptacles carries the same voltage, current and altitude ratings as the corresponding standard LGH connector series when properly mated.

VRL cable assemblies feature the integrally molded end to provide positive mating and an excellent seal. They are completely shielded for RFI when mated with the appropriate receptacle.

The receptacles are of the molded glass epoxy type with a protective metal shroud that is hermetically sealed between plastic and metal. These receptacles mate with the single-end ruggedized lead assemblies shown in the same series.

Special designs also are available upon request if the standard VRL lead assembly and receptacle designs will not fulfill your immediate needs.

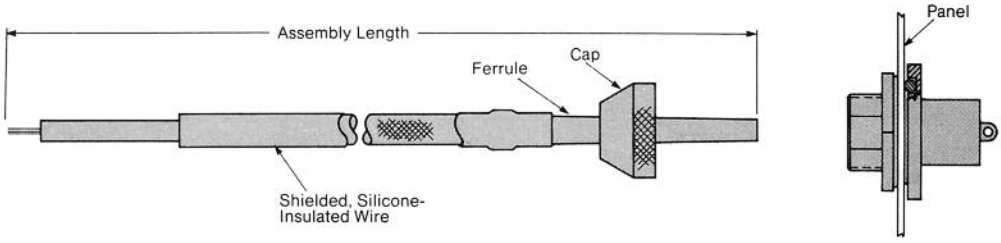

LGH Connector Series	Lead Assemblies			Receptacles		
	Length	Single End	Double End	Jam Nut	Square Flange	Dimensions
1/2 L 15 KVDC	**6** 152.4	862485-8	—	862295-1	862363-1	1/2-28 UNEF Thread .60 [15.24] Behind Panel .98 [24.89] Overall Length
	12 304.6	862485-3	862294-4			
	18 457.2	—	862294-3			
	36 914.4	—	1-862294-0			
1 L 25 KVDC	**12** 304.6	862484-7	862444-3	862443-1 5-862443-1*	862362-1	5/8-18 UNEF Thread 1.10 [27.94] Behind Panel 1.84 [46.74] Overall Length
	24 609.6	862484-4	—			
	36 914.4	862484-8	—			
4 50 KVDC	**12** 304.6	863124-1	863254-1	863125-1	863253-1	1-3/16-18 UNEF Thread 1.55 [39.37] Behind Panel 2.15 [54.61] Overall Length
	24 609.6	863124-2	863254-3			
	36 914.4	863124-3	—			
	48 1219.2	—	863254-4 5-863254-4*			

*RoHS compliant Part Number.

Dimensions are shown for reference purposes only. Specifications subject to change.

Dimensions are in millimeters unless otherwise specified.

USA: +1 800 522 6752
Asia Pacific: +86 0 400 820 6015
UK: +44 800 267 666

For additional support numbers please visit www.te.com

Various Specials (Continued)

Field Installable Connectors

Kits for PTFE Insulated Wire

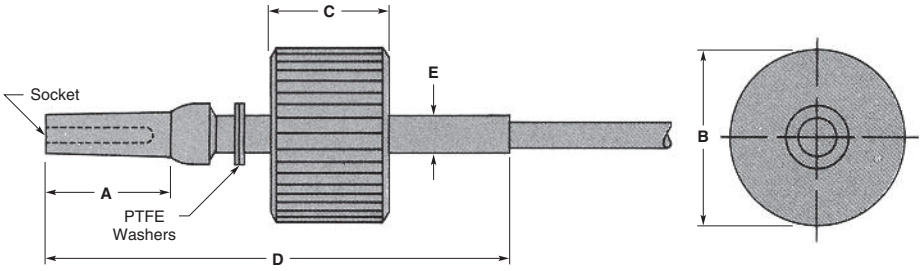

Standard Molded End

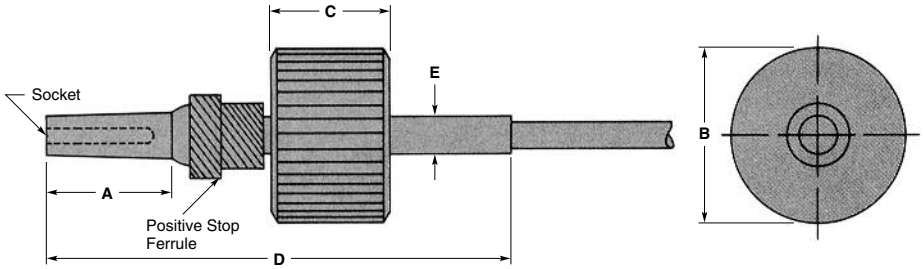

Positive Stop Molded End

Connector Description	Dimensions					Wire Diameter	Part Numbers	
	A	B	C	D	E		Molded End	Positive Stop
LGH 1/2 I	**.53** 13.5	**.49** 12.5	**.38** 9.7	**2.00** 50.8	**.160** 40.6	**.107–.113** 2.72–3.37	861076-1	—
						.081–.087 2.06–2.21	861076-2	—
						.107–.113 2.72–3.37	—	862514-1
LGH 1/2 LI	**.89** 22.6	**.49** 12.5	**.38** 9.7	**2.00** 50.8	**.160** 40.6	**.107–.113** 2.72–3.37	—	862515-1
LGH 1 I	**.88** 22.4	**.81** 20.57	**.50** 12.7	**3.00** 76.2	**.280** 71.1	**.155–.165** 3.94–4.19	—	862128-1
						.200–.210 5.08–5.33	—	862128-2
						.122–.132 3.10–3.35	—	862128-3
LGH 1 LI	**1.69** 42.9	**.81** 20.57	**.50** 12.7	**3.38** 85.9	**.280** 71.1	**.155–.165** 3.94–4.19	—	862518-1

Note: These connectors mate with standard LGH receptacles. Recommended cable is W.L. Gore High Voltage Wire or equivalent.

Dimensions are shown for reference purposes only. Specifications subject to change.

Dimensions are in millimeters unless otherwise specified.

USA: +1 800 522 6752
Asia Pacific: +86 0 400 820 6015
UK: +44 800 267 666

For additional support numbers please visit www.te.com

Accessories

Removable Cap Kits

These kits provide a quick and easy means of replacing damaged caps on standard LGH molded-end lead assemblies. Removing leads from bulkheads, enlarging holes in bulkheads or disconnecting leads from potted connections is unnecessary. Simple disconnection of the lead with the damaged cap is the only required step before installing the replacement. These cap kits also can be useful for applications which require threading leads through small openings in bulkheads, as illustrated at right.

Removable Caps

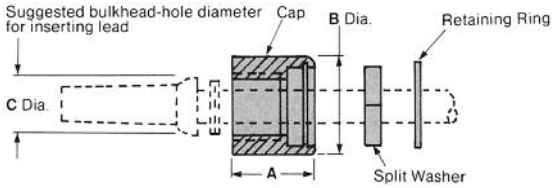

LGH Series	Dimensions A	Dimensions B	Dimensions C	Kit Part Number
1/2 I 1/2 LI	**.50** 12.7	**.50** 12.7	**.28** 7.11	849275-1
1 I 1 LI	**.62** 15.75	**.75** 19.05	**.44** 11.18	849267-1

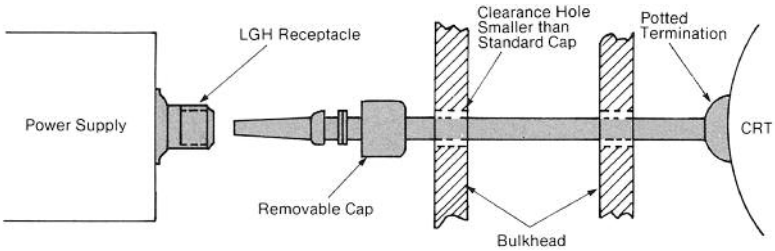

Dirt-Protective Caps

These caps protect LGH receptacles against damage to the threads and provide protection against accumulation of foreign matter on the insulator barrel and male contact. They are especially useful when receptacles are being shipped or stored.

Molded glass-epoxy caps meet specifications for MIL-M-24325 (Ships), GEI-5.

Aluminum caps, anodized black per MIL-A-8625, Type I, has an attached retaining chain. A silicone rubber gasket within provides a moisture and dust-proof seal.

These protective caps do not replace caps provided with LGH lead assemblies.

Glass-Epoxy Cap

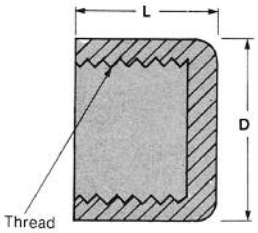

LGH Series	Dimensions L	Dimensions D	Thread Size	Part Number
1/2 I 1/2 LI	**.25** 6.35	**.44** 11.18	5/16-32 (M)	850512-1
1 I 1 LI	**.50** 12.7	**.63** 16	1/2-20 (M)	850513-1
2 I	**.56** 14.22	**1.12** 28.45	3/4-16 (M)	850514-1
4 I	**.56** 14.22	**1.37** 34.8	1-14 (M)	850515-1

Aluminum Cap

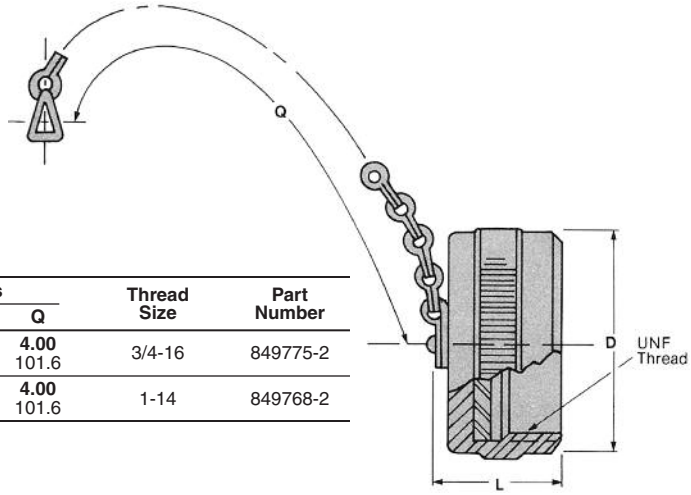

LGH Series	Dimensions L	Dimensions D	Dimensions Q	Thread Size	Part Number
2 I	**.71** 18.03	**.91** 23.11	**4.00** 101.6	3/4-16	849775-2
4 I	**.76** 19.3	**1.21** 30.73	**4.00** 101.6	1-14	849768-2

Arcing-Protective Caps

A multiple output power supply with vacant receptacles can be operated safely at high altitudes without fear of breakdown if floating receptacles are sealed with protective caps shown here.

Arcing-Protective Cap

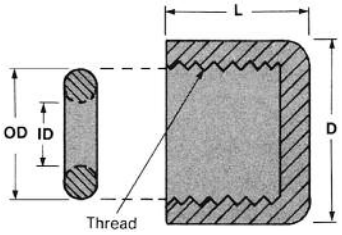

LGH Series	Dimensions L	Dimensions D	Dimensions O.D.	Dimensions I.D.	Thread Size	Part Number
1/2 I 1/2 LI	**.25** 6.35	**.44** 11.18	**.28** 7.11	**.14** 3.56	5/16-32	849055-1
1 I 1 LI	**.50** 12.7	**.62** 15.75	**.44** 11.18	**.23** 5.84	1/2-20	849252-1
2 I	**.56** 14.22	**1.12** 28.45	**.69** 17.53	**.50** 12.7	3/4-16	849253-1
4 I	**.56** 14.22	**1.37** 34.8	**.94** 23.88	**.75** 19.05	1-14	849254-1

Catalog 1308940
Revised 9-14

www.te.com

Dimensions are shown for reference purposes only. Specifications subject to change.

Dimensions are in millimeters unless otherwise specified.

USA: +1 800 522 6752
Asia Pacific: +86 0 400 820 6015
UK: +44 800 267 666

For additional support numbers please visit www.te.com

LGH Product Worksheet for Ordering Custom Designs

1. Customer name and location _____

2. Military application? _____ Commercial application? _____

3. Voltage: Working _____ DC _____ AC _____

   Test (High Potential) _____ DC _____ AC _____

   If AC, what frequency? _____ Hz.

   If pulsed DC, what repetition rate and duty cycle? _____

4. Current _____

5. Temperature: Operating _____ °C min. _____ °C max.

   Storage _____ °C min. _____ °C max.

6. Environment: Air _____ Oil (specify type) _____

   Water/humidity _____ Chemical _____

   Other (explain) _____

7. Altitude: Operating _____

   Storage _____

8. Hermetic seal required? _____ If yes, specify leakage rate: _____ ppm

9. What other mechanical or electrical features are required? _____

10. Plating desired? _____

11. Is a customer specification or drawing attached? _____

    If not, what dimensional restrictions apply? _____

12. Number of mating cycles needed: _____

13. For quoting purposes, what is the initial order quantity? _____

    Quantity for first year? _____

    Quantity for second year? _____

14. When are initial parts required? _____

Catalog 1308940
Revised 9-14

www.te.com

Dimensions are shown for reference purposes only. Specifications subject to change.

Dimensions are in millimeters unless otherwise specified.

USA: +1 800 522 6752
Asia Pacific: +86 0 400 820 6015
UK: +44 800 267 666

For additional support numbers please visit www.te.com

Table of Contents

How to Compute Circular Mil Area of Various Wire Shapes 10-2
Terminal Stud Hole Size 10-3

AMP Crimp Style

SOLISTRAND Uninsulated Terminals and Splices
Introduction 10-4
Terminals 10-5, 10-6
Application Tooling 10-7

STRATO-THERM Terminals and Splices for High Temperature Applications
Introduction . . . . . 10-8 to 10-10
Terminals and Splices . . . . . 10-11 to 10-16
PIDG Terminals and Splices for Thin Wall Cables . . . . . .10-17 to 10-20
Application Tooling 10-21, 10-22

COPALUM Sealed Terminals and Splices
Introduction 10-23, 10-24
Terminals 10-25, 10-26
Splices 10-27
Application Tooling 10-28

PIDG (Pre-Insulated DIAMOND GRIP) Terminals and Splices
Introduction 10-29
Terminals . . . . . 10-30 to 10-35
Splices 10-36
Application Tooling 10-37

Radiation Resistant/302°F [150°C] Pre-Insulated Terminals and Splices
Introduction 10-38
Terminals 10-39, 10-40
Application Tooling 10-40

TERMINYL Insulated Terminals
Introduction 10-41
Terminals 10-42
Application Tooling 10-41

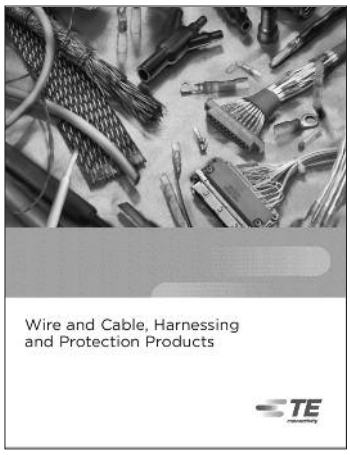

For additional product information on Raychem brand Solder & Crimp Style terminals and splices, refer to catalog 1654025 “Wire and Cable, Harnessing & Protection Products”.

How to Compute Circular Mil Area of Various Wire Shapes

Square or Rectangular Wire

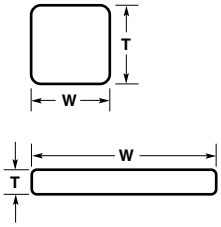

U.S. Customary Dimensions

Multiply the width of the wire cross section in mils by the thickness of the wire cross section in mils by 1.2732 and subtract the radius factor shown below.

CMA = W x T x 1.2732 – radius factor

Metric Dimensions

Multiply the width of the wire cross section in millimeters by the thickness of the wire cross section in millimeters by 1973.525 and subtract the radius factor shown below.

CMA = W x T x 1973.525 – radius factor

Round Solid Wire AWG

Multiply the diameter in mils by itself.

CMA = D^2

Multiply the diameter in millimeters by itself by 1550.003

CMA = D^2 x 1550.003

Stranded Wire AWG

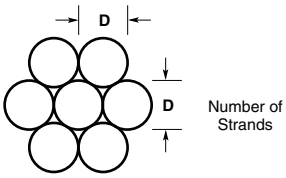

Multiply the diameter of one strand (in mils) by itself, and then multiply the result by the total number of strands.

CMA = D^2 x N

Multiply the diameter of one strand in millimeters by itself by the number of strands by 1550.003.

CMA = D^2 x N x 1550.003

Conversion Table

To Convert From	To	Multiply By
CMA	mm^2	.0005067075
CMA	in^2	.0000007854
mm^2	in^2	.001550003
mm^2	CMA	1973.525

Note: Refer to table listing for circular mil area for common wire sizes.

Radius Factor, U.S. Customary

Radius (in.)	Radius Factor To Subtract (CMA)
.010	110
.012	158
.016	280
.020	438
.026	740
.032	1121
.040	1752
.063	4346
.094	9675

Radius must be measured.

Radius Factor, Metric

Radius (mm)	Radius Factor To Subtract (CMA)
0.25	106
0.3	153
0.35	208
0.4	272
0.5	424
0.6	611
0.8	1086
1.2	2444

Radius must be measured.

Cross Reference AMP Closed Barrel Sizes/Metric Cable

Wire Size in^2 [mm^2]	Typical cables (metric)		AMP Code
.00078 [0.5]	16/0.20		22-16
.00116 [0.75]	24/0.20		22-16
.00155 [1.0]	32/0.20	1/1.13	22-16
.00233 [1.5]	30/0.25	1/1.38	22-16, 16-14
.00388 [2.5]	50/0.25	1/1.78	16-14
.00620 [4.0]	56/0.30	7/0.85	12-10
.00930 [6.0]	84/0.30	7/1.04	12-10
.01550 [10]	80/0.40	7/1.35	8
.02480 [16]	126/0.40	7/1.70	6
.03875 [25]	196/0.40	7/2.14	4
.05425 [35]	276/0.40	19/1.53	2
.07750 [50]	396/0.40	19/1.78	1/0
.10850 [70]	360/0.50	19/2.14	2/0
.14725 [95]	475/0.50	19/2.52	3/0
.18600 [120]	608/0.50	37/2.93	231-300 MCM
.23250 [150]	756/0.50	37/2.25	231-300 MCM
.28675 [185]	925/0.50	37/2.52	300-380 MCM
.37200 [240]	1221/0.50	61/2.25	380-478 MCM

Cross Reference AMP Closed Barrel Sizes/Metric Aircraft Cables

Wire Size in^2 [mm^2]	Typical cables (metric)		AMP Code
.00023 [0.15]	19/0.10		26-22
.00033 [0.21]	19/0.12	7/0.20	26-22, 24-22
.00053 [0.34]	19/0.15		24-22
.00093 [0.60]	19/0.20		22-16, 20
.00144 [0.93]	19/0.25		22-16, 18-16
.00207 [1.34]	19/0.30		16-14, 18-16
.00282 [1.82]	37/0.25		16-14, 18-16
.00465 [3.00]	37/0.32	19/0.45	12-10, 14-12
.00721 [4.65]	37/0.40		12-10
.01304 [8.41]	119/0.30		8
.01993 [12.86]	182/0.30		6
.03221 [20.78]	294/0.30		4
.05005 [32.29]	203/0.45		2
.06040 [38.97]	245/0.45 (Size 1)		2
.07938 [51.21]	322/0.45		1/0
.10354 [66.80]	420/0.45		2/0
.12769 [82.38]	518/0.45		3/0
.16393 [105.76]	665/0.45		4/0

Dimensions are shown for reference purposes only. Specifications subject to change.

Dimensions are in millimeters unless otherwise specified.

USA: +1 800 522 6752
Asia Pacific: +86 0 400 820 6015
UK: +44 800 267 666

For additional support numbers please visit www.te.com

Terminal Stud Hole Size

Use to Select Proper Size Terminal

The chart shows sizes and dimensions of various studs and the corresponding terminal stud hole sizes used with AMP devices.

For example, with stud #5 (.125 [3.18] Diameter), use AMP device listed for #5 stud (.129 [3.28] Hole Diameter).

Terminal stud hole sizes may easily be checked by fitting sample terminal to black circle. Chart shows cross reference from BA-US-Metric stud sizes.

Stud Size			Stud Dia.	Minimum Terminal Hole Diameter
Imperial	U.S. Cust.	Metric		
	#0		.060	.064
	#1		.073	.077
	#2	M2	.086	.090
8BA	#3		.099	.103
6BA	#4	M2.5	.112	.116
	#5	M3	.125	.129
4BA	#6	M3.5	.138	.142
	#8	M4	.164	.168
2BA	#10		.190	.194
	#12		.216	.220
	#14		.242	.245
0BA	1/4"	M6	.250	.260
	5/16"	M8	.312	.323
	3/8"	M9.5	.375	.385
	7/16"		.437	.448
	1/2"	M12	.500	.510

Stud Size		Stud Dia.	Minimum Terminal Hole Diameter
U.S. Cust.	Metric		
5/8"	M16	.625	.651
3/4"		.750	.776
7/8"	M22	.875	.901
1"		1.000	1.026
1 1/8"		1.125	1.151
1 1/4"		1.250	1.276

Catalog 1308940
Revised 9-14

www.te.com

Dimensions are shown for reference purposes only. Specifications subject to change.

Dimensions are in millimeters unless otherwise specified.

USA: +1 800 522 6752
Asia Pacific: +86 0 400 820 6015
UK: +44 800 267 666

For additional support numbers please visit www.te.com

Introduction

SOLISTRAND terminals and splices are specially designed to terminate solid and stranded wire, irregular shaped conductors, and combinations of these—still retaining the superior performance characteristics of single-purpose terminals and splices. Because we match the terminal to the tool each termination is uniform, making quality control easy and performance consistent. Corrosion resistance, vibration resistance and tensile strength of these terminals and splices are well within the limits of commercial and military specifications. The SOLISTRAND terminals and splice line includes parallel and butt splices, and flag, ring, spade, hooked, and flanged tongue terminals in sizes from 26 AWG [0.1 mm^2] through 600 MCM [304 mm^2].

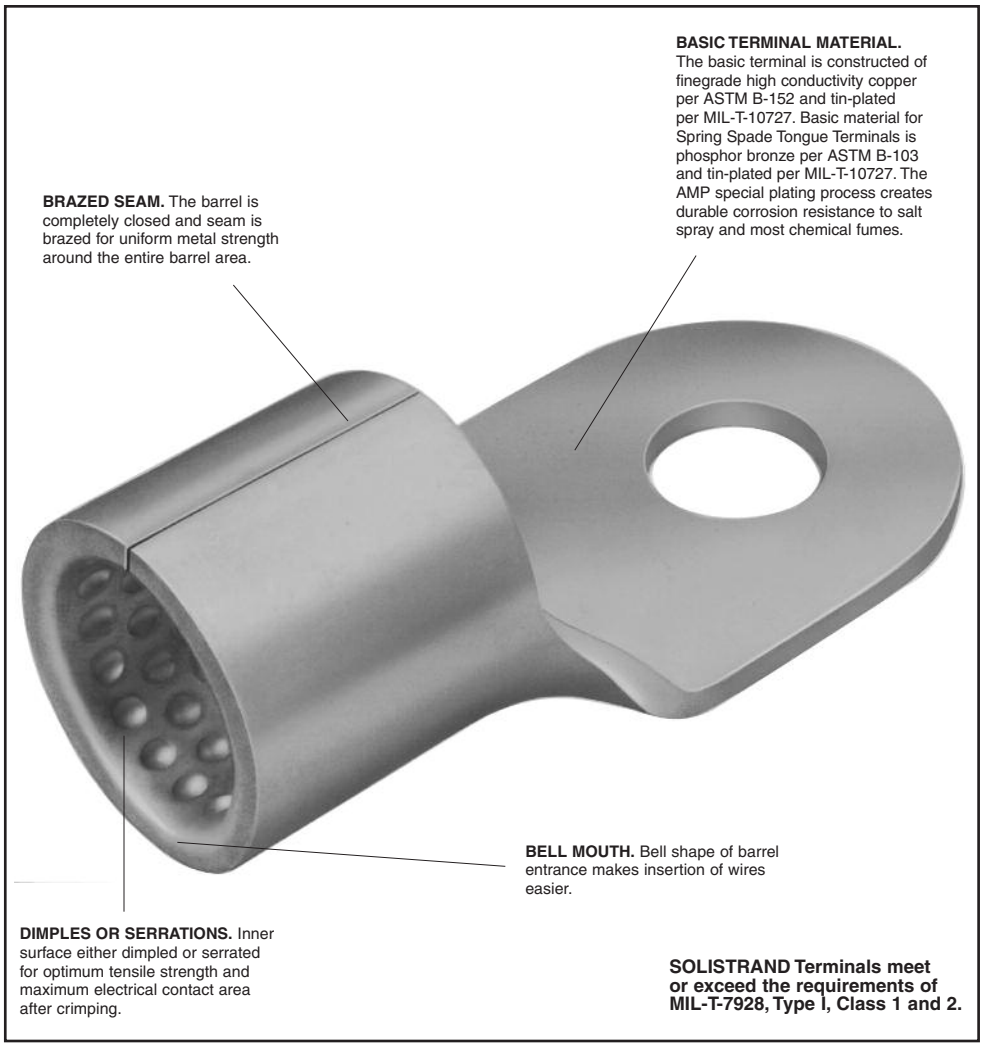

The Crimp

The "W" Crimp is one of several time-proven crimp types developed by TE Connectivity. It is not just a "kink" in a metal barrel; not something pinched over electrical wire ends. The "W" Crimp is actually two longitudinal crimps applied with precisely controlled pressure so that the conductor within the barrel flows together into the dimples or serrations of the terminal barrel creating one homogeneous mass of metal. The two indents also help to center conductors within the barrel for uniform crimping of the barrel around the wire. Furthermore, the "W" Crimp permits the use of a shorter terminal barrel, an excellent feature for confined area termination.

The "W" Crimp creates terminations of optimum electrical properties and is completely reliable, giving long service in harsh environments.

"W" Crimp

One Solid

Two Solid

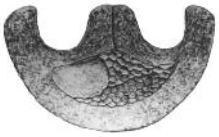

One Solid Two Stranded

One Stranded

Temperature Rating: 338°F [170°C] Max.

AMP SOLISTRAND Terminals and Splices (Use SOLISTRAND Tooling)

AMP Wire Size	UL Listed File No. E13288	CSA LR 7189 Certified
22–16 Solid or Stranded	22–16 Solid or Stranded	22–16 Solid or Stranded
16–14 Solid or Stranded	16–14 Solid or Stranded	16–14 Solid or Stranded
16–14 Heavy Duty Solid or Stranded	16–14 Heavy Duty Stranded	16–14 Heavy Duty Solid or Stranded
14–12 Solid or Stranded	14–12 Stranded	14–12 Solid or Stranded
12–10 Solid or Stranded	12–10 Stranded	12–10 Solid or Stranded
8 thru 600 MCM Solid or Stranded	8 thru 600 MCM Stranded	8 thru 600 MCM Solid or Stranded

Note: 22-16 terminals and splices are stamped 22-18 in accordance with MIL-T-7928. Commercial wire range is 22-16.

Dimensions are shown for reference purposes only. Specifications subject to change.

Dimensions are in millimeters unless otherwise specified.

USA: +1 800 522 6752
Asia Pacific: +86 0 400 820 6015
UK: +44 800 267 666

For additional support numbers please visit www.te.com

Ring Tongue Terminals

Material and Finish

Terminal Body — Copper per ASTM B-152

Plating — Tin per MIL-T-10727

A

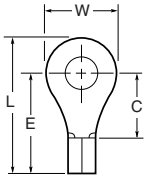

C

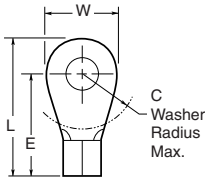

Military Specification M7928/7

Wire Size Circular Mils [mm²]	Stud Size	Style	Dimensions L Max.	E Max.	C Min.	W	Material Thickness Max.	Wire Barrel I.D. Min.	Class	M7928/7 Dash Number	Part Number
22–16 509–3,260 [0.26–1.65]	2 M2	A	.449 11.40	.337 8.56	.156 3.96	.218 5.54	.033 0.84	.061 1.55	-	-	34103 2-34103-1
	4	A	.449 11.40	.337 8.56	.156 3.96	.218 5.54	.033 0.84	.061 1.55	-	-	34104* 2-34104-6
	6 M3.5	A	.621 15.77	.462 11.73	.281 7.14	.312 7.92	.033 0.84	.061 1.55	-	-	34110* 2-34110-3
	10	A	.621 15.77	.462 11.73	.281 7.14	.312 7.92	.033 0.84	.061 1.55	-	-	34112* 2-34112-2
	5/16 M8	A	.856 21.74	.618 15.70	.437 11.10	.469 11.91	.033 0.84	.061 1.55	-	-	34114* 2-34114-2
	3/8	A	.995 25.27	.727 18.47	.546 13.87	.531 13.49	.033 0.84	.061 1.55	-	-	34115* 2-34115-2
16–14 2,050–5,180 [1.04–2.62]	4	A	.480 12.19	.352 8.94	.171 4.34	.250 6.35	.033 0.84	.085 2.16	-	-	34119* 2-34119-1
	6 M3.5	A	.590 14.99	.431 10.95	.250 6.35	.312 7.92	.033 0.84	.085 2.16	-	-	321684* 2-321684-1
	10	A	.669 16.99	.510 12.95	.250 6.35	.312 7.92	.033 0.84	.085 2.16	1	8	320093 2-320093-1
	5/16 M8	A	.855 21.72	.618 15.70	.437 11.10	.469 11.91	.033 0.84	.085 2.16	-	-	34125* 2-34125-6
	3/8	A	.995 25.27	.727 18.47	.546 13.87	.531 13.49	.033 0.84	.085 2.16	-	-	34126* 2-34126-2

Note: Part numbers are shown as loose piece over tape mounted product.
* Part numbers are available in small quantity packages.

Military Specification MS20659

Wire Size Circular Mils [mm²]	Stud Size	Style	Dimensions L Max.	E Max.	C	W	Material Thickness Max.	Wire Barrel I.D. Min.	Class	MS20659 Dash Number	Part Number
12–10 5,180–13,100 [2.62–6.64]	6 M3.5	A	.630 16.00	.487 12.37	.219 5.56	.281 7.14	.042 1.07	.129 3.28	-	-	35476* 2-35476-1
	10	A	.765 19.43	.575 14.61	.302 7.67	.375 9.53	.042 1.07	.129 3.28	1	105	33457* 2-33457-2
	5/16 M8	A	1.004 25.50	.736 18.69	.468 11.89	.531 13.49	.042 1.07	.129 3.28	1	106	33459* 2-33459-6
	3/8	A	1.098 27.89	.799 20.29	.531 13.49	.593 15.06	.042 1.07	.129 3.28	1	128	33220*
	1/2 M12	A	1.271 32.28	.893 22.68	.625 15.88	.750 19.05	.042 1.07	.129 3.28	-	-	35135
8 13,100–20,800 [6.64–10.5]	8 M4	C	.949 24.10	.743 18.87	.359 9.12	.406 10.31	.051 1.30	.172 4.37	-	-	324061*
	10	C	.949 24.10	.743 18.87	.359 9.12	.406 10.31	0.51 1.30	.172 4.37	-	-	31807 2-31807-2*[2]
	1/4 M6	C	.933 23.70	.696 17.68	.359 9.12	.469 11.91	.051 1.30	.172 4.37	-	-	33461* 2-33461-2*[1]
	5/16 M8	A	1.074 27.28	.790 20.07	.406 10.31	.562 14.27	.051 1.30	.172 4.37	-	-	31808*
	3/8	A	1.168 29.67	.868 22.05	.531 13.49	.594 15.09	.051 1.30	.172 4.37	-	-	33463*
6 20,800–33,100 [10.5–16.8]	10	C	1.168 29.67	.931 23.65	.531 13.49	.468 11.89	.060 1.52	.232 5.89	-	-	321298*
	1/4 M6	C	1.168 29.67	.931 23.65	.531 13.49	.468 11.89	.060 1.52	.232 5.89	-	-	321598*
	5/16 M8	C	1.246 31.65	.931 23.65	.531 13.49	.625 15.88	.060 1.52	.232 5.89	-	-	33466* 2-33466-3
	3/8	C	1.246 31.65	.931 23.65	.531 13.49	.625 15.88	.060 1.52	.232 5.89	-	-	33467*
	1/2 M12	C	1.840 46.74	1.400 35.56	1.000 25.40	.875 22.23	.060 1.52	.232 5.89	-	-	320344*

Note: Part numbers are shown as loose piece over tape mounted product.
* Part numbers are available in small quantity packages.
[1] Requires a 69875 standard AMP-TAPETRONIC machine for application.
[2] Requires a 68250-1 Heavy Duty AMP-TAPETRONIC machine for application.

Dimensions are shown for reference purposes only. Specifications subject to change.

Dimensions are in millimeters unless otherwise specified.

USA: +1 800 522 6752
Asia Pacific: +86 0 400 820 6015
UK: +44 800 267 666

For additional support numbers please visit www.te.com

Ring Tongue Terminals (Continued)

Material and Finish

Terminal Body — Copper per ASTM B-152

Plating — Tin per MIL-T-10727

Military Specification MS20659 (Continued)

B

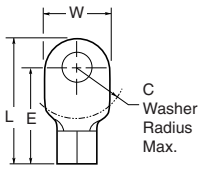

C

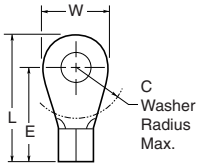

D

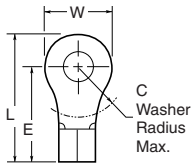

Wire Size Circular Mils [mm²]	Stud Size	Style	Dimensions L Max.	Dimensions E Max.	Dimensions C	Dimensions W	Material Thickness Max.	Wire Barrel I.D. Min.	Class	MS20659 Dash Number	Part Number
4 33,100–52,600 [16.8–26.7]	10	C	**1.199** 30.45	**.946** 24.03	**.437** 11.10	**.500** 12.70	**.073** 1.85	**.280** 7.11	-	-	33114
	1/4 M6	C	**1.199** 30.45	**.946** 24.03	**.437** 11.10	**.500** 12.70	**.073** 1.85	**.280** 7.11	-	-	31811†
	5/16 M8	C	**1.324** 33.63	**1.009** 25.63	**.500** 12.70	**.625** 15.88	**.073** 1.85	**.280** 7.11	-	-	33115
	3/8	C	**1.324** 33.63	**1.009** 25.63	**.500** 12.70	**.625** 15.88	**.073** 1.85	**.280** 7.11	-	-	31812
	1/2 M12	B	**1.902** 48.31	**1.462** 37.13	**1.000** 25.40	**.875** 22.23	**.073** 1.85	**.296** 7.52	-	-	327175*
2 52,600–83,700 [26.7–42.4]	10	B	**1.527** 38.79	**1.212** 30.78	**.531** 13.49	**.625** 15.88	**.073** 1.85	**.370** 9.40	-	-	330301
	1/4 M6	B	**1.527** 38.79	**1.212** 30.78	**.531** 13.49	**.625** 15.88	**.073** 1.85	**.370** 9.40	-	-	320383*
	5/16 M8	B	**1.527** 38.79	**1.212** 30.78	**.531** 13.49	**.625** 15.88	**.073** 1.85	**.370** 9.40	-	-	322870*
	3/8	B	**1.527** 38.79	**1.212** 30.78	**.531** 13.49	**.625** 15.88	**.073** 1.85	**.370** 9.40	-	-	321600*
	7/16	D	**1.657** 42.09	**1.212** 30.78	**.531** 13.49	**.890** 22.61	**.073** 1.85	**.370** 9.40	-	-	320741
1/0 83,700–119,500 [42.4–60.6]	1/4 M6	C	**1.925** 48.90	**1.532** 38.91	**.625** 15.88	**.807** 20.50	**.073** 1.85	**.444** 11.28	-	-	321866
	5/16 M8	C	**1.925** 48.90	**1.532** 38.91	**.625** 15.88	**.807** 20.50	**.073** 1.85	**.444** 11.28	-	-	321867*
	3/8	C	**1.925** 48.90	**1.532** 38.91	**.625** 15.88	**.807** 20.50	**.073** 1.85	**.444** 11.28	-	-	321868
	7/16	C	**1.956** 49.68	**1.529** 38.84	**.625** 15.88	**.875** 22.23	**.073** 1.85	**.444** 11.28	-	-	36918
	1/2 M12	C	**1.956** 49.68	**1.529** 38.84	**.625** 15.88	**.875** 22.23	**.073** 1.85	**.444** 11.28	-	-	36919*
2/0 119,500–150,500 [60.6–76.3]	1/4 M6	C	**1.930** 49.02	**1.550** 39.37	**.625** 15.88	**.926** 23.52	**.083** 2.11	**.504** 12.80	-	-	321869
	5/16 M8	C	**1.930** 49.02	**1.550** 39.37	**.625** 15.88	**.926** 23.52	**.083** 2.11	**.504** 12.80	-	-	321870*
	3/8	C	**1.930** 49.02	**1.550** 39.37	**.625** 15.88	**.926** 23.52	**.083** 2.11	**.504** 12.80	-	-	321871*
	7/16	C	**1.930** 49.02	**1.550** 39.37	**.625** 15.88	**.926** 23.52	**.083** 2.11	**.504** 12.80	-	-	321872
	1/2 M12	C	**1.930** 49.02	**1.550** 39.37	**.625** 15.88	**.926** 23.52	**.083** 2.11	**.504** 12.80	-	-	321873*
3/0 150,500–190,000 [76.3–96.3]	5/16 M8	B	**2.112** 53.64	**1.622** 41.20	**.625** 15.88	**1.020** 25.91	**.094** 2.39	**.565** 14.35	-	-	321874
	3/8	B	**2.112** 53.64	**1.622** 41.20	**.625** 15.88	**1.020** 25.91	**.094** 2.39	**.565** 14.35	-	-	321875*
	7/16	B	**2.112** 53.64	**1.622** 41.20	**.625** 15.88	**1.020** 25.91	**.094** 2.39	**.565** 14.35	-	-	321876
	1/2 M12	B	**2.112** 53.64	**1.622** 41.20	**.625** 15.88	**1.020** 25.91	**.094** 2.39	**.565** 14.35	-	-	321877*
4/0 190,000–231,000 [96.3–117]	5/16 M8	B	**2.537** 64.44	**1.985** 50.42	**1.078** 27.38	**1.150** 29.21	**.105** 2.67	**.635** 16.13	-	-	321271
	3/8	B	**2.178** 55.32	**1.657** 42.09	**.625** 15.88	**1.087** 27.61	**.105** 2.67	**.635** 16.13	-	-	321878*
	7/16	B	**2.178** 55.32	**1.657** 42.09	**.625** 15.88	**1.087** 27.61	**.105** 2.67	**.635** 16.13	-	-	321879
	1/2 M12	B	**2.178** 55.32	**1.657** 42.09	**.625** 15.88	**1.087** 27.61	**.105** 2.67	**.635** 16.13	-	-	321880*
	5/8 M16	B	**2.206** 56.03	**1.644** 41.76	**.625** 15.88	**1.150** 29.21	**.105** 2.67	**.635** 16.13	-	-	36935
	3/4	C	**2.732** 69.39	**2.117** 53.77	**1.078** 27.38	**1.275** 32.39	**.105** 2.67	**.635** 16.13	-	-	322228
	7/8 M22	C	**2.732** 69.39	**2.117** 53.77	**1.078** 27.38	**1.275** 32.39	**.105** 2.67	**.635** 16.13	-	-	321625

* Part numbers are available in small quantity packages.

Dimensions are shown for reference purposes only. Specifications subject to change.

Dimensions are in millimeters unless otherwise specified.

USA: +1 800 522 6752
Asia Pacific: +86 0 400 820 6015
UK: +44 800 267 666

For additional support numbers please visit www.te.com

Application Tooling

Wire Size Range AWG 26 to 6

Product Type	Wire Size	Hand Tools	Pneumatic Tooling: Crimping Heads for 626 Tool: Single Wire Range	Pneumatic Tooling: Crimping Heads for 626 Tool: Multiple Wire Range	Dies for 626, Tool Requires Straight Action Adapter 217200-1 or 318161-1 Dies Also Fit 69710-1 Hand Tool	Tooling For Tape Mounted Products: Dies for 69875 AMP-TAPETRONIC AMP-O-LECTRIC Requires Applicator AMPOMATOR CLS IV Requires Applicators
SOLISTRAND terminals	26-22	69363[2]	—	—	—	768625-1
	24-20					—
	22-16	49935[2] 58546-1[3]	314516-1[4]	—	47812[4]	68240-1
	16-14		314517-1[4]	679301-1[4]	47813[4]	68241-1
	12-10 & 16-14 HD		—	—	47814[1, 4]	68242-1
	14-12	49592[2]	314518-1[4]	—	—	90566-1
	8	—	1338757-1[4]	—	—	68243-1
	6	—	1338758-1[5]	—	—	—

[1] For standard wire only.
[2] CERTI-CRIMP Hand Tool.
[3] Contains die set 58545-1. PRO-CRIMPER II commercial tool not approved for UL applications.
[4] Use with 626 Pneumatic Tool 189721-1 or 189722-1.
[5] Use with 626 Pneumatic Tool 189721-2 or 189722-2.

Wire Size Range AWG 8 to 600 MCM

Product Type	Wire Size	Hand Tool	Pneumatic Tooling 69015	Hydraulic Tools With Self Contained Dies: Hand Tool	Hydraulic Tools With Self Contained Dies: Latch Head	Hydraulic Tools With Interchangeable Dies: Hand Tools 1490748-1 and 1490749-1 or Hydraulic Heads 1490745-1, 1490746-1 and 1976230-1: Nest	Hydraulic Tools With Interchangeable Dies: Hand Tools 1490748-1 and 1490749-1 or Hydraulic Heads 1490745-1, 1490746-1 and 1976230-1: Indent	Hydraulic Tools With Interchangeable Dies: 1752788-1 Latch Head	Hydraulic Tools With Interchangeable Dies: 1752786-1 "C" Head	Hydraulic Tools With Interchangeable Dies: 1752868-1[2] "C" Head	Tooling For Tape Mounted Product: Dies for 69875 AMP-TAPETRONIC (Listed dies are single indent. See product information for proper tape application tooling selection)	Tooling For Tape Mounted Product: Dies for 68250-1 HD AMP-TAPETRONIC (Listed dies are single indent. See product information for proper tape application tooling selection)
Standard Terminals	8	69355[1]	49956	59975-1	1673672-1	1490413-1	1490414-1			69216	68243-1	68312-1
	6		48172			1490413-2	1490414-2			69217	—	68313-1
	4	59131	48173			1490413-3				69218	—	—
	2		48174			1490413-4				45433	—	—
	1/0		48183			1490413-5	1490414-3			45436	—	—
	2/0					1490413-6				45439	—	—
	3/0					1490413-7				45442	—	—
	4/0					1490413-8				45445	—	—
	250-300 MCM							48816	69911			
	300-350 MCM							48817	69912			
	400 MCM							48818	69913			
	500-600 MCM							48819	69914			

[1] CERTI-CRIMP Hand Tool.
[2] These crimping heads are recommended for use only with AMP Hydraulic Foot Pump 1583659-1 and Hydraulic Hand Pump 1583661-1, DYNA-CRIMP Hydraulic Power Units 1804700-1 (115 VAC) and 1804700-2 (230 VAC).

www.tooling.tycoelectronics.com
www.tooling.tycoelectronics.com/europe

Dimensions are shown for reference purposes only. Specifications subject to change.

Dimensions are in millimeters unless otherwise specified.

USA: +1 800 522 6752
Asia Pacific: +86 0 400 820 6015
UK: +44 800 267 666

For additional support numbers please visit www.te.com

Introduction

Product Facts

- **Product available in temperature ranges of 500°F [260°C], 550°F [288°C], 650°F [343°C] and 1200°F [649°C]**
- **Product employs the famous "W" and "C" crimp**
- **Wide range of wire sizes**
- **Complete line of related application tooling**
- **Accommodates solid and/or stranded conductors**

Heat…extreme heat… searing temperatures up to 1200°F [649°C]. This is one of the most challenging environments that electrical/electronic circuitry has ever entered.

If heat is an unavoidable dimension in your circuit design and production, this product is an important ally. In this line of STRATO-THERM terminals and splices, you'll find high temperature circuit hardware. You'll also find solutions to other more familiar circuit problems such as vibration, corrosion and flash-over, when they occur at high temperatures.

Different types of high temperature terminals and splices found in this catalog are as follows:

PIDG Terminals and Splices, and Pre-Insulated Spare Wire Caps — 550°F [288°C] Range

PIDG Insulation Restriction Terminals — 550°F [288°C] Range

Post-Insulated Terminals and Splices — 550°F [288°C] Range

Uninsulated Terminals and Splices — 650°F [343°C] Range

Uninsulated Terminals and Splices — 1200°F [649°C] Range

Dimensions are shown for reference purposes only. Specifications subject to change.

Dimensions are in millimeters unless otherwise specified.

USA: +1 800 522 6752
Asia Pacific: +86 0 400 820 6015
UK: +44 800 267 666

For additional support numbers please visit www.te.com

Introduction (Continued)

PIDG Terminals and Splices, and Pre-Insulated Spare Wire Caps 550°F [288°C] Range

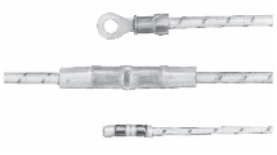

Designed for reliable performance up to 550°F [288°C], this line of ring-tongue terminals, butt splices and spare wire caps features a pre-insulation sleeve of PTFE TFE insulation material. A special funnel entry feature has been added to promote easy entry and proper seating of wire. The body is copper with a choice of gold over nickel plating or nickel plating. The terminal and splice barrel accommodates stranded wire conductors only. The spare wire caps are designed for unstripped wire.

PIDG Insulation Restriction Terminals 550°F [288°C] Range

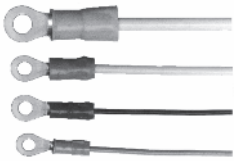

These pre-insulated insulation restriction terminals better prevent the insulation of thin-wall insulation wire from entering the terminal's wire crimp area during the crimping process.

Designed for reliable performance up to 550°F [288°C], these terminals feature a pre-insulation sleeve of PTFE (TFE) insulation material.

Because of features such as a one-piece constructed inner sleeve and a wide funnel entry design which facilitates wire entry, standard STRATO-THERM PIDG tooling may be used to terminate this product.

Post-Insulated Terminals and Splices 550°F [288°C] Range

The temperature range of these terminals and splices is 550°F [288°C] for nickel plating and gold over nickel plated copper, and 500°F [260°C] for silver plating, These terminals and splices accommodate solid and/or stranded conductors.

Uninsulated Terminals and Splices 650°F [343°C] Range

These terminals and splices are available with and without wire insulation support. Both types are manufactured from electrolytic copper, plated with nickel. In the insulation support type, the support sleeve is fabricated from nickel-silver alloy. Both types accommodate solid or stranded conductors in various combinations. Wire size range is listed in the tabular data section.

Uninsulated Terminals and Splices 1200°F [649°C] Range

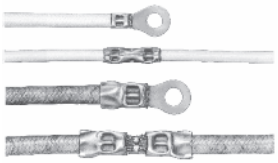

Nickel material is used for the body of both the terminal and splice. They are available with or without wire insulation support sleeve of nickel-silver alloy material. Accommodating either solid or stranded conductors in different combinations, these terminals and splices are made to cover a broad wire size range, listed in the tabular data section.

Terminals made of alumel and chromel material with nickel-silver alloy sleeves are available for thermocouple applications. When using either alumel or chromel conductors, a terminal of the same material should be selected.

Catalog 1308940
Revised 9-14

www.te.com

Dimensions are shown for reference purposes only. Specifications subject to change.

Dimensions are in millimeters unless otherwise specified.

USA: +1 800 522 6752
Asia Pacific: +86 0 400 820 6015
UK: +44 800 267 666

For additional support numbers please visit www.te.com

Introduction (Continued)

Ordering Information

All terminals and splices are listed according to wire size and type of terminal or splice. If the part number of the terminal or splice is known, refer to the Numerical Index, at the back of this catalog, for page location of tabular data.

In the Tabular Data Section, part numbers are available in either loose piece or tape mounted form.

When ordering tape mounted part numbers, specify the terminal or splice part number, the total quantity of parts desired (if applicable). The chart to the right lists by wire size the type of packaging available and the quantity per package.

Wire Range	Standard Quantities	
AWG	Loose Piece	Tape Mounted
26 – 14	1,000	5,000
26 – 22	—	2,500
12 – 10	500	2,500
8, 6, 4	100	—
2, 1/0	50	—

Note: Package quantities may vary with specific part numbers.

The Crimp

All five types of STRATO-THERM terminals and splices provide optimum corrosion and vibration resistance plus outstanding tensile characteristics.

All types, except the STRATO-THERM PIDG terminals, splices and pre-insulated spare wire caps, employ the famous "W" crimp which creates the precise electromechanical properties necessary for solid and/or stranded conductor combinations. A proper crimp will provide a uniform attachment. When mechanical pressure is applied to the terminal barrel, the wire inside is forced into the serrations or dimples of the barrel. Shown are four typical photomacrographs of the "W" crimp, illustrating the results of crimping various conductor combinations. In each case, the action of the crimp has compressed the conductors and the barrel into a homogenous mass.

"W" Crimp

One Solid

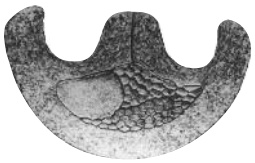

One Solid Two Stranded

Two Solid

STRATO-THERM PIDG terminals and splices employ the equally reliable confined "C" crimp plus multiple position insulation support crimp for today's smaller insulated wires. This "C" crimp is especially suited to crimping the terminal barrel and insulation sleeve to stranded wire conductors. The photomacrograph shows the results of "C" crimping. Virtually the same electromechanical properties are obtained as in the "W" crimp. Pre-insulated spare wire caps and post-insulated splices are crimped with an "O" crimp configuration.

Confined C

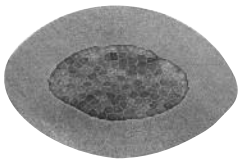

Dimensions are shown for reference purposes only. Specifications subject to change.

Dimensions are in millimeters unless otherwise specified.

USA: +1 800 522 6752
Asia Pacific: +86 0 400 820 6015
UK: +44 800 267 666

For additional support numbers please visit www.te.com

Insulated Terminals and Splices

PIDG (Pre-Insulated DIAMOND GRIP) Ring Tongue Terminals

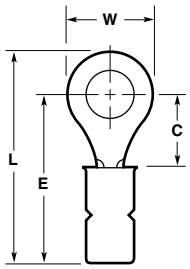

Temperature Rating, Material and Finish

Insulation — PTFE

Terminal Body — Copper per ASTM B152

Plating — Nickel per QQ-N-290, 550°F [288°C]. Gold per MIL-G-45204 over Nickel per QQ-N-290 500°F [260°C]

Metallic Sleeve — Copper per ASTM B152

Plating — Nickel per QQ-N-290, 550°F [288°C]

Related Product Data

Application Tooling — pages 10-21 and 10-22

Wire Size Circular Mils [mm²]	Tongue Material Thickness Max.	Stud Size	Dimensions W	C Min.	E Max.	L Max.	Terminal Insulation Color	Wire Insulation Diameter Max.	Body Plating[1]	Part Number Loose Piece
18-16 1,600-2,800 [0.81-1.42]	**.033** 0.84	4	**.218** 5.54	**.156** 3.96	**.560** 14.22	**.672** 17.07	Orange	**.135** 3.43	Nickel	50834
		8 M4	**.312** 7.92	**.281** 7.14	**.685** 17.40	**.844** 21.44	Orange	**.135** 3.43	Nickel	50836
		10	**.312** 7.92	**.281** 7.14	**.685** 17.40	**.844** 21.44	Orange	**.135** 3.43	Nickel	50836-1
12-10 5,180-13,100 [2.62-6.64]	**.042** 1.07	8 M4	**.375** 9.53	**.302** 7.67	**.893** 22.68	**1.083** 27.51	Black	**.214** 5.44	Nickel	50845-1
		10	**.375** 9.53	**.302** 7.67	**.893** 22.68	**1.083** 27.51	Black	**.214** 5.44	Nickel	50845-2
		1/4 M6	**.531** 13.49	**.437** 11.10	**1.012** 25.70	**1.280** 32.51	Black	**.214** 5.44	Nickel	50846

[1] Nickel plated parts are to be used with nickel plated wire. Gold plated parts are to be used with silver plated wire.
Note: "C" dimension applies from edge of metal wire barrel to center of stud hole.

Pre-Insulated Spare Wire Caps (For Unstripped Wire)

Tool Part Number 69272-1

Temperature Rating, Material and Finish

Insulation — PTFE

Ring — Copper per ASTM B152

Plating — Nickel per QQ-N-290, 550°F [288°C]

Related Product Data

Application Tooling — shown to the right

Wire Insulation Diameter Range	Dimension L Max.	Ring Color	Tool Color Guide	Part Number
.075 – .087 1.91 – 2.21	**.500** 12.70	Black and Orange	Orange	328859

Dimensions are shown for reference purposes only. Specifications subject to change.

Dimensions are in millimeters unless otherwise specified.

USA: +1 800 522 6752
Asia Pacific: +86 0 400 820 6015
UK: +44 800 267 666

For additional support numbers please visit www.te.com

Uninsulated Terminals and Splices

SOLISTRAND Heat Resistant Ring Tongue Terminals

Temperature Rating, Material and Finish

Terminal Body — Copper per ASTM B152

Plating — Nickel per QQ-N-290, 650°F [343°C]

Related Product Data

Application Tooling — pages 10-21 and 10-22

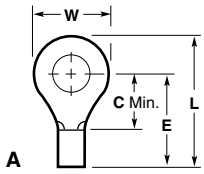

Non-Insulation Support

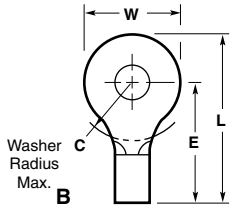

Non-Insulation Support (Wire Range 2 & 1/0)

Wire Size Circular Mils [mm²]	Tongue Material Thickness Max.	Stud Size	Style	Dimensions W	C	E Max.	L Max.	Part Number Loose Piece
22-16 509-3,260 [0.26-1.65]	.033 0.84	6 M3.5	A	.218 5.54	.156 3.96	.337 8.56	.449 11.40	322797
			A	.281 7.14	.250 6.35	.436 11.07	.574 14.58	323219
		8 M4	A	.281 7.14	.250 6.35	.436 11.07	.574 14.58	322798
		10	A	.281 7.14	.250 6.35	.436 11.07	.574 14.58	322799
16-14 2,050-5,180 [1.04-2.62]	.033 0.84	10	A	.343 8.71	.281 7.14	.462 11.73	.636 16.15	322695*
		1/4 M6	A	.469 11.91	.437 11.10	.618 15.70	.855 21.72	322733
12-10 5,180-13,100 [2.62-6.64]	.042 1.07	10	A	.375 9.53	.302 7.67	.575 14.61	.765 19.43	323062
		5/16 M8	A	.531 13.49	.468 11.89	.736 18.69	1.004 25.50	323064
8 13,100-20,800 [6.64-10.5]	.051 1.30	10	A	.406 10.31	.359 9.12	.743 18.87	.949 24.10	323165
		1/4 M6	A	.469 11.91	.359 9.12	.696 17.68	.933 23.70	323166
		5/16 M8	A	.562 14.27	.406 10.31	.790 20.07	1.074 27.28	323167
6 20,800-33,100 [10.5-16.8]	.060 1.52	10	A	.468 11.89	.531 13.49	.931 23.65	1.168 29.67	323169
		3/8	A	.625 15.88	.531 13.49	.931 23.65	1.246 31.65	323172
4 33,100-52,600 [16.8-26.7]	.073 1.85	1/4 M6	A	.500 12.70	.437 11.10	.946 24.03	1.199 30.45	323173
2 52,600-83,700 [26.7-42.4]	.073 1.85	3/8	B	.625 15.88	.540 13.72	1.212 30.78	1.527 38.79	323177

*Available in small packaging quantities.

Dimensions are shown for reference purposes only. Specifications subject to change.

Dimensions are in millimeters unless otherwise specified.

USA: +1 800 522 6752
Asia Pacific: +86 0 400 820 6015
UK: +44 800 267 666

For additional support numbers please visit www.te.com

Uninsulated Terminals and Splices (Continued)

SOLISTRAND Heat Resistant Splices

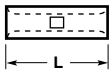

Style-A Non-Insulation Support Butt Splice

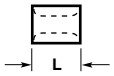

Style-B Non-Insulation Support Parallel Splice

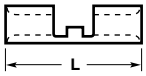

Style-C Non-Insulation Support Butt Splice

Temperature Rating, Material and Finish

Splice Body — Copper per ASTM B152

Plating — Nickel per QQ-N-290, 650°F [343°C]

Related Product Data

Application Tooling — pages 10-21 and 10-22

Wire Size Circular Mils [mm²]	Material Thickness Max.	Style	Dimensions L Max.	Dimensions ID Min.	Dimensions OD Max.	Part Number Loose Piece
22-16 509-3,260 [0.26-1.65]	.033 0.84	A	.578 14.68	.061 1.55	.141 3.58	323796
		B	.301 7.65	.061 1.55	.141 3.58	323030
		C	.591 15.01	.061 1.55	.141 3.58	322822
16-14 2,050-5,180 [1.04-2.62]	.033 0.84	A	.567 14.40	.085 2.16	.165 4.19	323795
		B	.301 7.65	.085 2.16	.165 4.19	323794
12-10 5,180-13,100 [2.62-6.64]	.042 1.07	A	.565 14.35	.129 3.28	.226 5.74	323755
		B	.333 8.46	.129 3.28	.226 5.74	323754
8 13,100-20,800 [6.64-10.5]	.051 1.30	B	.375 9.53	.172 4.37	.296 7.52	2-34318-1

SOLISTRAND High Temperature Ring Tongue Terminals

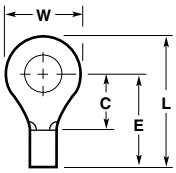

Non-Insulation Support

Temperature Rating and Material

Terminal Body — Nickel per ASTM B162, 1200°F [649°C]

Related Product Data

Application Tooling — pages 10-21 and 10-22

Wire Size Circular Mils [mm²]	Tongue Material Thickness Max.	Color Code	Stud Size	Dimensions W	Dimensions C Min.	Dimensions E Max.	Dimensions L Max.	Part Number Loose Piece
22-16 509-3,260 [0.26-1.65]	.033 0.84	Orange	4	.218 5.54	.156 3.96	.337 8.56	.449 11.40	321884
			5 M3	.218 5.54	.156 3.96	.337 8.56	.449 11.40	321885
			6 M3.5	.281 7.14	.250 6.35	.431 10.95	.574 14.58	321889*
			8 M4	.281 7.14	.250 6.35	.431 10.95	.574 14.58	321890*
			10	.281 7.14	.250 6.35	.431 10.95	.574 14.58	321891*
16-14 2,050-5,180 [1.04-2.62]	.033 0.84	Orange	6 M3.5	.250 6.35	.171 4.34	.352 8.94	.480 12.19	322329
			8 M4	.343 8.71	.281 7.14	.462 11.73	.636 16.15	322334*
			10	.343 8.71	.281 7.14	.462 11.73	.636 16.15	322335*
			1/4 M6	.468 11.89	.437 11.10	.618 15.70	.855 21.72	322339

*Available in small packaging quantities.

Dimensions are shown for reference purposes only. Specifications subject to change.

Dimensions are in millimeters unless otherwise specified.

USA: +1 800 522 6752
Asia Pacific: +86 0 400 820 6015
UK: +44 800 267 666

For additional support numbers please visit www.te.com

Uninsulated Terminals and Splices (Continued)

SOLISTRAND High Temperature Ring Tongue Terminals

Temperature Rating and Material

Terminal Body — Nickel per ASTM B162, 1200°F [649°C]

Related Product Data

Application Tooling — pages 10-21 and 10-22

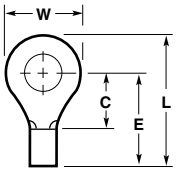

Non-Insulation Support

Wire Size Circular Mils [mm²]	Tongue Material Thickness Max.	Color Code	Stud Size	Dimensions W	C Min.	E Max.	L Max.	Part Number Loose Piece
12-10 5,180-13,100 [2.62-6.64]	**.042** 1.07	Orange	8 M4	**.375** 9.53	**.281** 7.14	**.549** 13.94	**.739** 18.77	323745*
			10	**.375** 9.53	**.281** 7.14	**.549** 13.94	**.739** 18.77	323680*
			1/4 M6	**.531** 13.49	**.468** 11.89	**.736** 18.69	**1.004** 25.50	323683*
8 13,100-20,800 [6.64-10.5]	**.051** 1.30	Orange	10	**.406** 10.31	**.359** 9.12	**.743** 18.87	**.949** 24.10	328822

*Available in small packaging quantities.

SOLISTRAND High Temperature Splices

Temperature Rating and Material

Splice Body — Nickel per ASTM B162, 1200°F [649°C]

Related Product Data

Application Tooling — pages 10-21 and 10-22

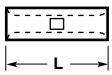

Style-A Non-Insulation Support Butt Splice

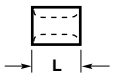

Style-B Non-Insulation Support Parallel Splice

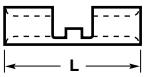

Style-C Non-Insulation Support Butt Splice

Wire Size Circular Mils [mm²]	Material Thickness Max.	Color Code	Style	Dimensions L Max.	ID Min.	OD Max.	Part Number Loose Piece
22-16 509-3,260 [0.26-1.65]	**.033** 0.84	Orange	A	**.578** 14.68	**.061** 1.55	**.141** 3.58	322324*
			B	**.301** 7.65	**.061** 1.55	**.141** 3.58	322326
16-14 2,050-5,180 [1.04-2.62]	**.033** 0.84	Orange	A	**.567** 14.40	**.085** 2.16	**.165** 4.19	322345
			B	**.301** 7.65	**.085** 2.16	**.165** 4.19	322347
			C	**.529** 13.44	**.085** 2.16	**.165** 4.19	323878
12-10 5,180-13,100 [2.62-6.64]	**.042** 1.07	Orange	A	**.567** 14.40	**.129** 3.28	**.226** 5.74	323696*
			B	**.333** 8.46	**.129** 3.28	**.226** 5.74	323672
			C	**.703** 17.86	**.129** 3.28	**.226** 5.74	323698

*Available in small packaging quantities.

Uninsulated Terminals and Splices (Continued)

DIAMOND GRIP Heat Resistant Ring Tongue Terminals

Temperature Rating, Material and Finish

Terminal Body — Copper per ASTM B152

Plating — Nickel per QQ-N-290, 650°F [343°C]

Metallic Sleeve — Nickel Silver per ASTM B122

Related Product Data

Application Tooling — pages 10-21 and 10-22

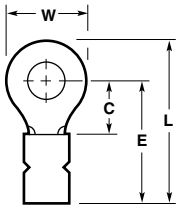

Insulation Support

Wire Size Circular Mils [mm²]	Tongue Material Thickness Max.	Stud Size	Dimensions W	C Min.	E Max.	L Max.	Wire Insulation Diameter Max.	Part Numbers Loose Piece	Tape Mounted
22-16 509-3,260 [0.26-1.65]	.033 0.84	4	.218 5.54	.156 3.96	.512 13.00	.624 15.85	.140 3.56	322363	—
		6 M3.5	.218 5.54	.156 3.96	.530 13.46	.645 16.38	.110 2.79	323151	—
			.281 7.14	.250 6.35	.611 15.52	.749 19.02	.140 3.56	323199	—
		8 M4	.281 7.14	.250 6.35	.611 15.52	.749 19.02	.140 3.56	322365	—
			.281 7.14	.250 6.35	.629 15.98	.770 19.56	.110 2.79	323152	—
		10	.281 7.14	.250 6.35	.611 15.52	.749 19.02	.140 3.56	322366	—
			.281 7.14	.250 6.35	.629 15.98	.770 19.56	.110 2.79	323153	—
16-14 2,050-5,180 [1.04-2.62]	.033 0.84	10	.343 8.71	.281 7.14	.637 16.18	.811 20.60	.170 4.32	322375	—
			.343 8.71	.281 7.14	.659 16.74	.836 21.23	.130 3.30	323161	—
12-10 5,180-13,100 [2.62-6.64]	.042 1.07	6 M3.5	.375 9.53	.302 7.67	.841 21.36	1.034 26.26	.230 5.84	323066	—
		10	.375 9.53	.302 7.67	.841 21.36	1.034 26.26	.230 5.84	323068	323068-1
		1/4 M6	.531 13.49	.468 11.89	1.002 25.45	1.273 32.33	.230 5.84	323069	—

Note: "C" dimension applies from edge of metal wire barrel to center of stud hole.

DIAMOND GRIP High Temperature Ring Tongue Terminals

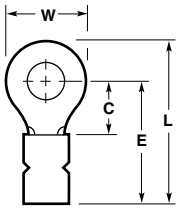

Insulation Support

Temperature Rating and Material

Terminal Body — See table, 1200°F [649°C], Nickel per ASTM B162, Alumel —, Chromel —

Metallic Sleeve — Nickel Silver per ASTM B122

Related Product Data

Application Tooling — pages 10-21 and 10-22

Wire Size Circular Mils [mm²]	Tongue Material Thickness Max.	Stud Size	Dimensions W	C Min.	E Max.	L Max.	Body Material	Sleeve Color Code	Wire Insulation Diameter Max.	Part Number Loose Piece
22-16 509-3,260 [0.26-1.65]	.033 0.84	6 M3.5	.281 7.14	.250 6.35	.611 15.52	.749 19.02	Nickel	Orange	.140 3.56	321892
		8 M4	.281 7.14	.250 6.35	.611 15.52	.749 19.02	Nickel	Orange	.140 3.56	321893
			.312 7.92	.281 7.14	.637 16.18	.796 20.22	Nickel	Orange	.140 3.56	321897
			.312 7.92	.281 7.14	.637 16.18	.796 20.22	Chromel	Gray	.140 3.56	1-321897-0
		10	.281 7.14	.250 6.35	.611 15.52	.749 19.02	Nickel	Orange	.140 3.56	321894
			.312 7.92	.281 7.14	.637 16.18	.796 20.22	Nickel	Orange	.140 3.56	321898
			.312 7.92	.281 7.14	.637 16.18	.796 20.22	Alumel	Green	.140 3.56	1-321898-0
		1/4 M6	.468 11.89	.437 11.10	.793 20.14	1.031 26.19	Nickel	Orange	.140 3.56	322320

Note: "C" dimension applies from edge of metal wire barrel to center of stud hole.

Uninsulated Terminals and Splices (Continued)

DIAMOND GRIP High Temperature Ring Tongue Terminals

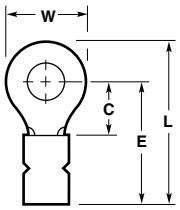

Insulation Support

Temperature Rating and Material

Terminal Body — See table, 1200°F [649°C], Nickel per ASTM B162, Alumel —, Chromel —

Metallic Sleeve — Nickel Silver per ASTM B122

Related Product Data

Application Tooling — pages 10-21 and 10-22

Wire Size Circular Mils [mm²]	Tongue Material Thickness Max.	Stud Size	Dimensions W	C Min.	E Max.	L Max.	Body Material	Sleeve Color Code	Wire Insulation Diameter Max	Part Number Loose Piece
16-14 2,050-5,180 [1.04-2.62]	**.033** 0.84	8 M4	**.343** 8.71	**.281** 7.14	**.637** 16.18	**.811** 20.60	Nickel	Orange	**.170** 4.32	322337
		10	**.343** 8.71	**.281** 7.14	**.637** 16.18	**.811** 20.60	Nickel	Orange	**.170** 4.32	322338
12-10 5,180-13,100 [2.62-6.64]	**.042** 1.07	8 M4	**.375** 9.53	**.281** 7.14	**.815** 20.70	**1.008** 25.60	Nickel	Orange	**.230** 5.84	323749
			.375 9.53	**.281** 7.14	**.815** 20.70	**1.008** 25.60	Chromel	Gray	**.230** 5.84	2-323749-1
		10	**.375** 9.53	**.281** 7.14	**.815** 20.70	**1.008** 25.60	Nickel	Orange	**.230** 5.84	323750
			.375 9.53	**.281** 7.14	**.815** 20.70	**1.008** 25.60	Alumel	Green	**.230** 5.84	2-323750-1
		1/4 M6	**.531** 13.49	**.468** 11.89	**1.002** 25.45	**1.273** 32.33	Nickel	Orange	**.230** 5.84	323751

Note: "C" dimension applies from edge of metal wire barrel to center of stud hole.

Dimensions are shown for reference purposes only. Specifications subject to change.

Dimensions are in millimeters unless otherwise specified.

USA: +1 800 522 6752
Asia Pacific: +86 0 400 820 6015
UK: +44 800 267 666

For additional support numbers please visit www.te.com

PIDG Terminals and Splices for Thin Wall Cables

Product Facts

- **All high and low temperature PIDG STRATO-THERM Terminals and Splices conform to BS 2G 178 — crimped joints for aircraft cables and wires — and meets the requirements of BS G 204, class II**
- **Temperature Range — -67° to +221°/+302°F [-55° to +105°/+150°C]**
- **European military & civil program cross references available, i.e. Pannavia, Eurofighter, Concorde, Airbus and other customer platforms**
- **302°F [150°C] — High temperature**
  - **D.D.P. No.: GP 10 D**
  - **Nickel plating over copper barrel PTFE**
  - **sleeve**
  - **Not tested up to 190°C and 260°C as set out in BS 2G 178**
- **221°F [105°C] — Low temperature**
  - **D.D.P. No.: GP 17**
  - **Tin plating over copper barrel**
  - **Nylon sleeve**
  - **Compatible with all BS 2G 178 fluids, except BS 3150 and BS M 26**
- **Dot code feature for additional visual verification of correct cavity to terminal association after crimp possible**
- **Instruction Sheet — 408-1049**
- **Insulated sleeves are color coded for easy identification**
- **Used for thin wall cable with tin or nickel plated conductors**
- **Nickel plated Terminals and Splices are not recommended to crimp with silver plated conductors. Gold plating is recommended for silver plated conductors.**
- **Inner serrated wire barrel for improved electrical conductivity and high tensile strength**

The special PIDG STRATO-THERM Terminal & Splice line for thin wall aircraft cables and wires is used in nearly every Aerospace & Defense platform in Europe. We do offer this line in a low temperature 221°F [105°C] and high temperature 302°F [150°C] profile.

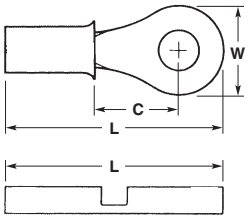

Low Temperature Range

Related Product Data

Application Tooling — pages 10-21 and 10-22

Wire Size	Stud Size +/- .03 [+/- 0.8]	Stud Size Metric	Stud Size BA #	Stud Size UN #	Dimensions (Max.) W	Dimensions (Max.) L	Dimensions (Max.) C	Color Code	Wire Insulation Outside Dia.	Part Number
22-24	**.119** 3.02	M2.5	6	4	**.281** 7.14	**.780** 19.80	**.25** 6.35	Black	**.035-.075** 0.90-1.90	151438
					.218 5.54	**.746** 18.94	**.265** 6.73			151458
	.145 3.68	M3	4	6	**.218** 5.54	**.652** 16.56	**.166** 4.22			151437
					.281 7.14	**.780** 19.80	**.25** 6.35			151439
	.171 4.34	M4	3	8	**.281** 7.14	**.780** 19.80	**.25** 6.35			151440
	.197 5.00	—	2	10	**.281** 7.14	**.780** 19.80	**.25** 6.35			151441
20	**.093** 2.36	M2	8	2	**.218** 5.54	**.662** 16.81	**.166** 4.22	Purple	**.043-.079** 1.10-2.00	152899
	.122 3.10	M2.5	6	4	**.218** 5.54	**.662** 16.81	**.166** 4.22			152898
	.119 3.02	M2.5	6	4	**.240** 6.09	**.882** 22.40	**.36** 9.14			154924
	.148 3.76	M3	4	6	**.281** 7.14	**.787** 20.00	**.25** 6.35			152895
	.145 3.68	M3	4	6	**.250** 6.35	**.882** 22.40	**.36** 9.14			152896
	.148 3.76	M3	4	6	**.218** 5.54	**.662** 16.81	**.166** 4.22			152897
	.171 4.34	M4	3	8	**.281** 7.14	**.787** 20.00	**.26** 6.60			152894
					.312 7.92	**.834** 21.18	**.291** 7.39			152893
	.200 5.08	—	2	10	**.312** 7.92	**.834** 21.18	**.291** 7.39			152891
	.199 5.06	—	2	10	**.281** 7.14	**.787** 20.00	**.26** 6.60			152892
	.268 6.81	M6	0	1/4	**.469** 11.91	**1.07** 27.13	**.447** 11.35			152890
	.331 8.41	M8	5/15	5/16	**.469** 11.91	**1.07** 27.13	**.447** 11.35			152889
	.393 9.98	M9.5	3/8	3/8	**.469** 11.91	**1.07** 27.13	**.447** 11.35			152888

Dimensions are shown for reference purposes only. Specifications subject to change.

Dimensions are in millimeters unless otherwise specified.

USA: +1 800 522 6752
Asia Pacific: +86 0 400 820 6015
UK: +44 800 267 666

For additional support numbers please visit www.te.com

PIDG Terminals and Splices for Thin Wall Cables (Continued)

Low Temperature Range
(Continued)

Related Product Data
Application Tooling — page 10-22

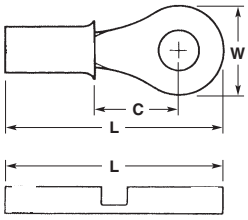

Wire Size	Stud Size +/- .03 [+/- 0.8]	Stud Size Metric	Stud Size BA #	Stud Size UN #	Dimensions (Max.) W	Dimensions (Max.) L	Dimensions (Max.) C	Color Code	Wire Insulation Outside Dia.	Part Number
18-16	**.122** 3.10	M2.5	6	4	**.218** 5.54	**.680** 17.27	**.166** 4.22	Orange	**.055-.106** 1.40-2.70	152887
	.125 3.18	M2.5	6	4	**.240** 6.09	**.90** 22.86	**.360** 9.14			154927
	.145 3.68	M3	4	6	**.281** 7.14	**.805** 20.44	**.26** 6.60			152884
					.132 3.35	**.90** 22.86	**.37** 9.39			152885
					.218 5.54	**.680** 17.27	**.166** 4.22			152886
	.171 4.34	M4	3	8	**.312** 7.92	**.852** 21.64	**.291** 7.39			152882
					.281 7.14	**.805** 20.44	**.268** 6.80			152883
	.197 5.00	—	2	10	**.312** 7.92	**.852** 21.64	**.291** 7.39			152880
					.281 7.14	**.805** 20.44	**.26** 6.60			152881
	.265 6.73	M6	0	1/4	**.469** 11.91	**1.09** 27.58	**.447** 11.35			152879
	.328 8.33	M8	5/16	5/16	**.469** 11.91	**1.09** 27.58	**.447** 11.35			152878
	.390 9.90	M9.5	3/8	3/8	**.531** 13.48	**1.23** 31.14	**.556** 14.12			152877
14-12	**.199** 3.02	M2.5	6	4	**.240** 6.09	**.974** 24.73	**.447** 11.35	White	**.091-.126** 2.30-3.20	154930
					.250 6.35	**.711** 18.05	**.181** 4.59			152876
	.145 3.68	M3	4	6	**.343** 8.71	**.867** 22.02	**.291** 7.39			152874
					.250 6.35	**.711** 18.05	**.181** 4.59			152875
	.171 4.34	M4	3	8	**.343** 8.71	**.867** 22.02	**.291** 7.39			152873
	.197 5.00	—	2	10	**.343** 8.71	**.867** 22.02	**.291** 7.39			152872
	.265 6.73	M6	0	1/4	**.469** 11.91	**1.09** 27.58	**.447** 11.35			152871
	.328 8.33	M8	5/16	5/16	**.469** 11.91	**1.09** 27.58	**.447** 11.35			152870
	.390 9.90	M9.5	3/8	3/8	**.531** 13.48	**1.22** 31.04	**.556** 14.12			152869

Splices

Wire Size	Stud Size +/- .03 [+/- 0.8]	Stud Size Metric	Stud Size BA #	Stud Size UN #	Dimensions (Max.) W	Dimensions (Max.) L	Dimensions (Max.) C	Color Code	Wire Insulation Outside Dia.	Part Number
24-22	—	—	—	—	—	**1.125** 28.58	—	Black	**.035-.075** 0.90-1.90	153400
20	—	—	—	—	—	**1.135** 28.82	—	Purple	**.043-.079** 1.10-2.00	153401
18-16	—	—	—	—	—	**.996** 25.30	—	Orange	**.055-.106** 1.40-2.70	153402
14-12	—	—	—	—	—	**.996** 25.30	—	White	**.091-.126** 2.30-3.20	153403

Dimensions are shown for reference purposes only. Specifications subject to change.

Dimensions are in millimeters unless otherwise specified.

USA: +1 800 522 6752
Asia Pacific: +86 0 400 820 6015
UK: +44 800 267 666

For additional support numbers please visit www.te.com

PIDG Ring Tongue Terminals for Thin Wall Cables

High Temperature Range

Related Product Data
Application Tooling — page 10-22

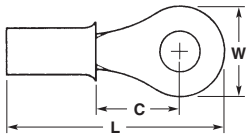

Style A

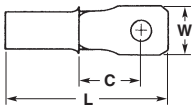

Style B

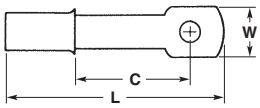

Style C

Wire Size	Stud Size +/- .03 [+/- 0.8]	Stud Size Metric	Stud Size BA #	Stud Size UN #	Dimensions (Max.) W	Dimensions (Max.) L	Dimensions (Max.) C	Color Code	Wire Insulation Outside Dia.	Style	Part Number
22-24	**.119** 3.02	M2.5	6	4	**.218** 5.54	**.657** 16.68	**.166** 4.22	Brown	**.035-.075** 0.90-1.90	A	152642
					.281 7.14	**.787** 19.98	**.25** 6.35				152644
					.218 5.54	**.751** 19.08	**.25** 6.35				152648
	.145 3.68	M3	4	6	**.218** 5.54	**.657** 16.68	**.166** 4.22				152643
					.281 7.14	**.787** 19.98	**.25** 6.35				152645
	.171 4.34	M4	3	8	**.281** 7.14	**.787** 19.98	**.25** 6.35				152646
	1.97 5.00	—	2	10	**.281** 7.14	**.787** 20.0	**.244** 6.20				152647
20	**0.93** 2.36	M2	8	2	**.218** 5.54	**.680** 17.27	**.166** 4.22	Grey	**.043-.079** 1.10-2.00	A	152660
	.122 3.10	M2.5	6	4	**.281** 7.14	**.787** 19.98	**.26** 6.60				152654
					.218 5.54	**.680** 17.27	**.166** 4.22				152659
	.148 3.76	M3	4	6	**.281** 7.14	**.787** 19.98	**.25** 6.35				152655
					.218 5.54	**.680** 17.27	**.166** 4.22				152658
	.171 4.34	M4	3	8	**.281** 7.14	**.787** 19.98	**.26** 6.60				152656
	.199 5.06	—	2	10	**.281** 7.14	**.787** 19.98	**.26** 6.60				152657
	.268 6.81	M6	0	1/4	**.469** 11.91	**1.08** 27.58	**.447** 11.35				152661
	.331 8.41	M8	5/16	5/16	**.469** 11.91	**1.08** 27.58	**.447** 11.35				152662
	.393 9.98	M9.5	3/8	3/8	**.469** 11.91	**1.08** 27.58	**.447** 11.35				152663
	.122 3.10	M2.5	6	4	**.218** 5.54	**.746** 18.94	**.26** 6.60			B	153493
18-16	**.122** 3.10	M3	6	4	**.218** 5.54	**.681** 17.30	**.166** 4.22	Orange	**.055-.106** 1.40-2.70	A	153103
	.145 3.68	M3	4	6	**.281** 7.10	**.807** 20.50	**.26** 6.60				153104
	.171 4.34	M4	3	8	**.312** 7.92	**.854** 21.70	**.291** 7.39				153105
	.197 5.00	—	2	10	**.312** 7.92	**.854** 21.70	**.291** 7.39				153106
	.265 6.73	M6	0	1/4	**.469** 11.91	**1.09** 27.70	**.447** 11.35				153107
	.328 8.33	M8	5/16	5/16	**.469** 11.91	**1.09** 27.70	**.447** 11.35				153108
	.390 9.90	M9.5	3/8	3/8	**.531** 13.48	**1.21** 30.79	**.531** 13.48				153109
	.125 3.17	—	—	—	**.223** 5.66	**.902** 22.90	**.359** 9.11			C	153475

Catalog 1308940
Revised 9-14

www.te.com

Dimensions are shown for reference purposes only. Specifications subject to change.

Dimensions are in millimeters unless otherwise specified.

USA: +1 800 522 6752
Asia Pacific: +86 0 400 820 6015
UK: +44 800 267 666

For additional support numbers please visit www.te.com

PIDG Ring Tongue Terminals for Thin Wall Cables (Continued)

High Temperature Range
(Continued)

Related Product Data
Application Tooling — page 10-22

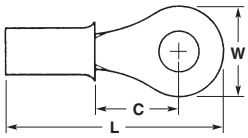

Style A

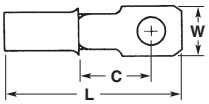

Style D

Wire Size	Stud Size				Dimensions (Max.)			Color Code	Wire Insulation Outside Dia.	Style	Part Number
	+/- .03 [+/- 0.8]	Metric	BA #	UN #	W	L	C				
14-12	**.119** 3.02	M2.5	6	4	**.25** 6.35	**.711** 18.06	**.181** 4.59	White	**.091-.126** 2.30-3.20	A	153110
	.145 3.68	M3	4	6	**.25** 6.35	**.711** 18.06	**.181** 4.59				153111
	.171 4.34	M4	3	8	**.343** 8.71	**.867** 22.02	**.291** 7.39				153112
	.197 5.00	—	2	10	**.343** 8.71	**.867** 22.02	**.291** 7.39				153113
	.265 6.73	M6	0	1/4	**.469** 11.91	**1.08** 27.58	**.448** 11.39				153114
	.328 8.33	M8	5/16	5/16	**.469** 11.91	**1.08** 27.58	**.448** 11.39				153115
	.390 9.90	M9.5	3/8	3/8	**.531** 13.48	**1.21** 30.76	**.531** 13.48				153116
	.119 3.02	M2.5	6	4	**.218** 5.44	**.798** 20.26	**.291** 7.39			D	153476
10	**.119** 3.02	M2.5	6	4	**.280** 7.10	**.937** 23.79	**.213** 5.40	Black	**.102-.150** 2.60-3.80	A	50844
	.145 3.68	M3	4	6	**.374** 9.50	**1.08** 27.50	**.295** 7.50				50845
	.171 4.34	M4	3	8	**.374** 9.50	**1.08** 27.50	**.295** 7.50				50845-1
	.197 5.00	—	2	10	**.374** 9.50	**1.08** 27.50	**.295** 7.50				50845-2
	.265 6.73	M6	0	1/4	**.531** 13.48	**1.28** 32.51	**.429** 10.90				50846
	.328 8.33	M8	5/16	5/16	**.531** 13.48	**1.33** 33.70	**.461** 11.70				50847
	.390 9.90	M9.5	3/8	3/8	**.593** 15.06	**1.40** 35.68	**.531** 13.48				50848

NSA936501	Part Number PEEK	Color	Size	PTFE Equivalent	Hand Tool
TA 2201	1577616-1	Brown	24-22	152642	AWG 24 and AWG 22 576778
TA 2202	1577617-1	Brown	24-22	152643	
TA 2203	1577618-1	Brown	24-22	152644	
TA 2204	1577619-1	Brown	24-22	152645	
TA 2205	1577620-1	Brown	24-22	152646	
TA 2206	1577621-1	Brown	24-22	152647	
TA 2001	1577622-1	Grey	20	152654	AWG 20 576779
TA 2003	1577623-1	Grey	20	152656	
TA 2004	1577624-1	Grey	20	152657	
TA 2005	1577625-1	Grey	20	152658	
TA 2006	1577626-1	Grey	20	152659	
TA 2008	1577627-1	Grey	20	152661	
TA 2009	1577628-1	Grey	20	152662	
TA 2010	1577629-1	Grey	20	152663	

NSA936501	Part Number PEEK	Color	Size	PTFE Equivalent	Hand Tool
TA 1601	1577630-1	Orange	18-16	153103	AWG 18 576780 AWG 16 576781
TA 1602	1577631-1	Orange	18-16	153104	
TA 1603	1577632-1	Orange	18-16	153105	
TA 1604	1577633-1	Orange	18-16	153106	
TA 1605	1577634-1	Orange	18-16	153107	
TA 1606	1577635-1	Orange	18-16	153108	
TA 1607	1577636-1	Orange	18-16	153109	
TA 1401	1577637-1	Beige	14-12	153110	AWG 14 576782 AWG 12 576783
TA 1402	1577638-1	Beige	14-12	153111	
TA 1403	1577639-1	Beige	14-12	153112	
TA 1404	1577640-1	Beige	14-12	153113	
TA 1405	1577641-1	Beige	14-12	153114	
TA 1406	1577642-1	Beige	14-12	153115	
TA 1407	1577643-1	Beige	14-12	153116	
TA 1001	1577644-1	Black	10	50844	AWG 10 576784
TA 1002	1577645-1	Black	10	50845	
TA 1003	1577646-1	Black	10	50845-1	
TA 1004	1577647-1	Black	10	134265-1	
TA 1005	1577648-1	Black	10	50846	
TA 1006	1577649-1	Black	10	50847	
TA 1007	1577650-1	Black	10	50848	

Dimensions are shown for reference purposes only. Specifications subject to change.

Dimensions are in millimeters unless otherwise specified.

USA: +1 800 522 6752
Asia Pacific: +86 0 400 820 6015
UK: +44 800 267 666

For additional support numbers please visit www.te.com

Application Tooling

Wire Size Range AWG 26-10

Product Type	Wire Size	Hand Tools	Pneumatic Tooling: Dies for 626 Pneumatic Tools 189721-[ ] and 189722-[ ] require Straight Action Adapter[1] 217200-1 or "C" Head Adapter 318161-1 Dies also fit 69710-1 Hand Tool	Tooling For Tape Mounted Products: Dies for 69875 AMP-TAPETRONIC AMP-O-LECTRIC[2] Requires Applicator AMPOMATOR CLS IV[2] Requires Applicators
Pre-Insulated Terminals	26-24	69692-1	69731	—
	22-20		69732	69936
	18-16	69693-1	69733	69937
	14		69734	—
	12-10	—	69735	—
Pre-Insulated Splices	22-20	—	69327	—
	18-16	—	69328	—
	14-12	—	69329	—

[1] Straight Action Adapter 217200-1 is used with Tools 189721-1 or 189722-1. "C" Head Adapter 318161-1 is used with Tools 189721-2 or 189722-2. Both adapters require the use of non-ratchet tool holder 189928-1 or ratchet tool holder 356304-1.
[2] Call Technical Support for Machine and Applicator part numbers.

Wire Size Range AWG 26-6

Product Type	Wire Size	Hand Tools	Hydraulic Tools With Interchangeable Dies: 1752868-1[2] "C" Head
Post Insulated Terminals and Splices	26-24	45730	—
	22-20	46467, 46468[1]	—
	18-16	46468	—
	8	—	69216
	6	—	69217

[1] Part Number 55235-1 only
[2] These crimping heads are recommended for use only with AMP Hydraulic Foot Pump 1583659-1, Hydraulic Hand Pump 1583661-1, DYNA-CRIMP Hydraulic Power Units 1804700-1 (115 VAC) and 1804700-2 (230 VAC).

Wire Size Range AWG 22-10

Product Type	Wire Size	Hand Tools	Pneumatic Tooling: Crimping Heads for 626 Pneumatic Tool 189721-1 and 189722-1[1]	Tooling For Tape Mounted Products: Dies for 69875 AMP-TAPETRONIC AMP-O-LECTRIC[2] Requires Applicator AMPOMATOR CLS IV[2] Requires Applicators
Uninsulated Terminals and Splices with Insulation Support	22-16	46673 46673-1	—	69930
	16-14	46988 59294	—	69931
	12-10	59461	904870-1	69932
Uninsulated Terminals and Splices with Non-Insulation Support	22-16	46447	217206-1	69954
	16-14			69955
	12-10			69956

[1] Crimping Heads require the use of non-ratchet tool holder 189767-1 or ratchet tool holder 356302-1.
[2] Call Technical Support for Machine and Applicator part numbers.

www.tooling.tycoelectronics.com
www.tooling.tycoelectronics.com/europe

Dimensions are shown for reference purposes only. Specifications subject to change.

Dimensions are in millimeters unless otherwise specified.

USA: +1 800 522 6752
Asia Pacific: +86 0 400 820 6015
UK: +44 800 267 666

For additional support numbers please visit www.te.com

Application Tooling (Continued)

Wire Size Range
AWG 8-1/0

Product Type	Wire Size	Hand Tools	Pneumatic Tooling	Hydraulic Tools WIth Self Contained Dies				Hydraulic Tools with Interchangeable Dies
			69015 Head	Hand Tool	Latch Head	Hand Tools 1490748-1 and 1490749-1 or Hydraulic Heads 1490745-1, 1490746-1, and 1976230-1 Nest	Indent	1752868-1 "C" Head
Uninsulated Terminals and Splices with Non-Insulation Support	8	69355[1]	49956	59975-1	1673672-1	1490413-1	1490414-1	69216
	6	—	48172			1490413-2	1490414-2	69217
	4	—	48173			1490413-3		69218
	2	—	48174			1490413-4		45433
	1/0	—	48183	—	—	1490413-5	1490414-3	45436

[1] CERTI-CRIMP Hand Tool.
[2] These crimping heads are recommended for use only with AMP Hydraulic Hand Pump 1583661-1 and Hydraulic Foot Pump 1583659-1, DYNA-CRIMP Hydraulic Power Units 1804700-1 (115 VAC) and 1804700-2 (230 VAC).

Tooling for Insulated Terminals

In order to obtain the best results from AMP terminals and splices, it is important to choose the correct tooling. Each terminal manufactured is matched to a compatible tool. By using the guidelines, it's easy to select the correct tool for your application. Different types of tooling are available including hand, pneumatic, or hydraulic. So whether you are involved in large production runs or just maintenance and repair there is a matched tool ideal for your application.

Heavy Head Tool

Hand Tooling

For repair, general maintenance or small production runs, hand tooling is the best way to a reliable termination. Easy to use, requiring no external power source, they can be easily carried from job to job. Precision crimp dies ensure a perfect termination.

AMP hand tooling meets all these requirements and more. Our un-surpassed expertise in connection technology has been used to benefit our complete range of tooling. Take for example the CERTI-CRIMP hand tool. There is a CERTI-CRIMP tool available for each terminal range. Every precision die has been constructed to the finest engineering standards and is strong enough to be used through thousands of crimp terminations. Our ratchet device provides that the crimp cycle is completed before releasing, so it is not either under, or over-crimp any terminal.

For larger terminals a heavy duty hand tool is available which also features a similar patented ratchet device.

Terminal Type	Wire Size mm2	Single Die		
		AWG	Hand Tool	Dot Code
PIDG Terminals for Thin Wall Cables High and Low Temperature	0.25-0.4	24-22	576778	2 dots
	0.6	20	576779	1 dot
	1.0	18	576780	2 dots
	1.2	16	576781	1 dot
	2.0	14	576782	2 dots
	3.0	12	576783	1 dot
	6.0	10	576784	1 dot

www.tooling.tycoelectronics.com
www.tooling.tycoelectronics.com/europe

Dimensions are shown for reference purposes only. Specifications subject to change.

Dimensions are in millimeters unless otherwise specified.

USA: +1 800 522 6752
Asia Pacific: +86 0 400 820 6015
UK: +44 800 267 666

For additional support numbers please visit www.te.com

Introduction

Product Facts

- **No need for inhibitor agents, thanks to our "dry crimp" technique**
- **Terminating/splicing capabilities for stranded aluminum wire, plus splicing of aluminum wire to copper wire conductors**
- **Wide wire-size range — aluminum 8 to 4/0 [8.6 to 110.9 mm^2] and copper 10 to 3/0 [4.8 to 85.9 mm^2]**
- **Efficient production rates, uniform reliability, at low cost — all because of AMP electro-hydraulic DYNA-CRIMP Tooling**
- **Optimum electrical, environmental, and mechanical performance crimps from AMP three-stage dies**
- **Portable battery powered hydraulic unit is available and low pressure crimp dies for 2/0 size**

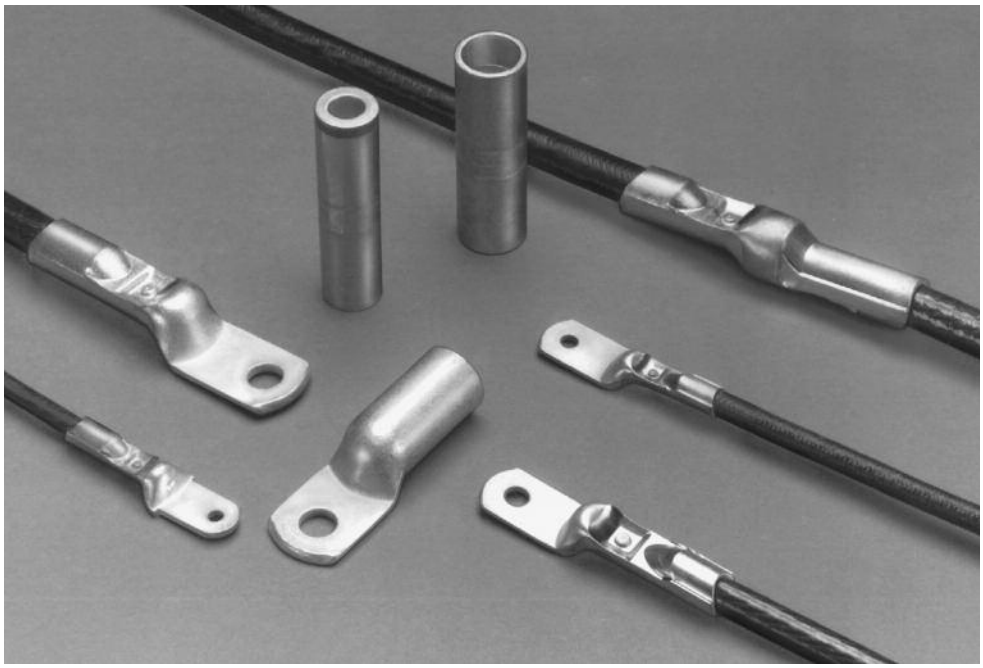

AMP COPALUM Sealed Terminals and Splices are designed especially for solving the inherent problems of terminating aluminum conductors. These connectors are terminated to stranded aluminum wire using a "dry crimp." This technique eliminates the need for an inhibitor agent to break down the highly tenacious and inert oxides that form on aluminum conductors. An extremely efficient and reliable crimping method, the dry crimp also produces a sealed connection that better prevents re-oxidation and corrosion when intimate terminal/conductor contact is achieved.

AMP COPALUM Sealed Terminals and Splices are available for terminating and splicing stranded aluminum wire in sizes ranging from 8 to 4/0 [8.6 to 110.9 mm^2] and copper 10 to 3/0 [4.8 to 85.9 mm^2]. With the capability of splicing aluminum wire to copper wire, these connectors are generally applicable wherever aluminum wire or cable is used. AMP COPALUM Sealed Terminals and Splices are especially suited for the aerospace industry.

Each connector body is constructed of tin-plated copper and houses a nickel-plated brass insert and funnel. The funnel is designed to better prevent wire strands from hanging up when inserted into the wire barrel. The perforated insert enhances reliability for the terminal and splice when crimped to the aluminum/copper conductors.

During the crimping operation, the relatively soft conductor material extrudes through the insert holes, causing the brittle oxide to be sheared, and clean conductor metal to be brought into intimate contact with the inner surfaces of the body and insert. These areas of extrusion form an air- and moisture-tight seal, minimizing oxidation and corrosion.

Stranded-wire crimping also produces "cold welding" or solid-phase bonding between each wire strand. During the crimping process, deformation pressure is applied from several planes, causing sufficient plastic flow of the conductor material. This fractures the oxide film on each wire strand and induces different rates of extrusion. The resulting wiping action under pressure produces interstrand bonding, yielding many contact surfaces and a substantial increase in the contact area. Excellent electrical characteristics are thus achieved.

The increase in contact area also decreases the chances of electrical malfunction due to creep, differences in thermal expansion, and corrosion. Also the insert grips the conductor securely, providing a good mechanical connection.

Economical termination of these connectors becomes a reality with the use of the AMP electro-hydraulic DYNA-CRIMP Tool. This tool is equipped with a uniquely designed die that simultaneously produces three distinct crimps.

Technical Documents

Instruction Sheets

408-2281— Application Terminals and Splices Tooling

408-2453 — Tool 69066/Crimping Die

408-9535 — Tool 58422-1

Product Specifications

108-11011 — Overall Aluminum Wires

108-11011-1 — Copper Wires

108-11011-2 — High Temp. Wires with Flag Terminals

Application Specifications

114-2134

Dimensions are shown for reference purposes only. Specifications subject to change.

Dimensions are in millimeters unless otherwise specified.

USA: +1 800 522 6752
Asia Pacific: +86 0 400 820 6015
UK: +44 800 267 666

For additional support numbers please visit www.te.com

Introduction (Continued)

Product Evolution

The AMP Sealed COPALUM terminal and splice product line was established in the 1950's. Originally it had two separate product lines, one for aluminum wire and one for copper wire. Each line had butt connectors and terminals.

The Aluminum wire connector bodies were made of stamped and formed aluminum strip stock and COPALUM terminal connector bodies were made of stamped and formed copper strip stock.

Both products contained a closed cup (cartridge) installed within each wire barrel. This cartridge contained an oxide inhibiting compound with abrasive particles that flowed during crimping into the strand voids (interstices) and mechanically abraded the wire and barrel oxide surfaces. The oxide inhibitor protected the contact surfaces from further oxidation and formed a temporary partial seal between the conductor and the crimped insulation support.

The crimp dies were the two stage type and of the confined crescent design. The first stage crimped the wire barrel and cartridge, while the second stage crimped only the flared cartridge end. This second stage crimp produced the insulation support which was designed as a strain relief.

In the 60's, all copper bodies and perforated inserts were introduced. The industry wanted a dry crimp with a fully sealed body. Some important advantages of the copper design are:

1. Almost all buss contacts are copper. The plated terminal tongue needs no special contact surface treatment against the bolted copper buss. This is the (dynamic), disconnectable part of the connection.
2. The copper wire barrel allows for a natural two step down capacity from an equivalent aluminum wire to copper wire.
   Example—#4 aluminum down to #6 copper.
3. The more dense copper has 100% electrical conductivity compared to aluminum at 61% maximum. Copper compared to aluminum has hardly any mechanical creep; therefore, with the proper crimp, it provides a much more stable crimped (static), permanently sealed connection.
4. Within the circuit design there is always a need to change from high temperature copper wires to lower temperature aluminum wires. With the copper connector, we have the choices of "optional" (4 AL-6 CU) or "primary" (4 AL-4 AL) or "secondary" (6 CU-6CU) all within the same wire barrel and crimp die envelope.
5. During crimping, the hard nickel plated perforated insert digs into and intimately connects the wire and copper body while at the same time increasing the fresh surface contact areas via the holes and extrusion. With this feature, we now have a preferred "dry" connection with the copper to aluminum transition occurring inside the connector body where it is protected and controlled.
6. The barrier walls of the terminal and splice body provide the blind hole required for an environmentally-sealed crimp.
7. The product has a three stage simultaneous crimp design which allows for a very secure electrical crimp, a smooth transition crimp which goes up to the full round sealing crimp. It also has an identification feature and maintains maximum connector wall thickness after crimp.

We made several changes to the product line in the 80's and also changed the part numbers as listed below.

1. The perforated insert was modified without causing a change in connector performance.
2. The internal components were oriented and permanently locked in place during manufacture.
3. Clearer, more permanent marking was introduced with the straight knurl stripes replacing the blue ink stripe guides used to show crimp location.

TE Connectivity continually monitors incoming material for material conformance. Consolidation of production facilities and improved equipment produce more accurate component parts which, after heat treatment and plating, yield an overall higher quality assembly. All customer drawings are now on new formats and are on CAD. Catalog and instructional materials are regularly updated.

In April 1993, a new application sheet 114-2134 was completed. Also in 1993, we released a whole line of two stud hole terminals, silver plated with high temperature terminals, two 4/0 AL style terminals, a new crimp die, and various sheared tongue styles.

Using engineering tools like CAE/CAD/CAM, thermography, and computer driven image analysis on crimp cross-sections, we are able to arrive at and maintain optimum product integrity and reliability.

As with all AMP products, we have a continuing program of product and process improvements to promote maximum performance to meet customer's needs.

Single Hole Ring Tongue Terminals

Standard Tongue

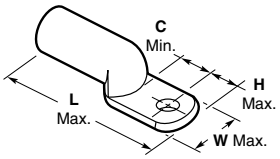

Sheared Tongue

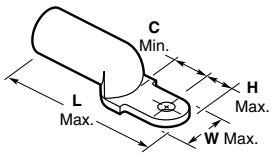

Wire Size Circular Mils / mm² Aluminum	Wire Size Circular Mils / mm² Copper	Insul. Dia. Range	Tongue Thickness (Nom.)	Stud Size	Tongue Type	Dimensions H Max.	Dimensions L Max.	Dimensions W Max.	Dimensions C Min.	Part Number	Weight Grams*	Tooling for Power Unit 1804700-1 or -2 Heads	Tooling for Power Unit 1804700-1 or -2 Die
8 **16564** 8.6	**10** **9354** 4.8	**.182–.200** 4.62–5.08	**.069** 1.75	**10**	—	**.291** 7.39	**1.66** 42.16	**.592** 15.04	**.50** 12.70	277147-1	11.0	1752877-1 or 1752787-1	68006
				1/4 6.35						277147-3	—		
				3/8 9.52						277147-2	10.0		
				10	Sheared	**.250** 6.35	**1.63** 41.40	**.492** 12.50	**.54** 13.72	277147-5	10.3		
6 **28280** 14.6	**8** **16983** 8.8	**.225–.250** 5.72–6.35	**.088** 2.24	**10**	—	**.310** 7.88	**1.90** 48.26	**.627** 15.92	**.47** 11.94	277148-1	16.8	1752877-1 or 1752787-1	68007
				1/4 6.35						277148-2	16.6		
				5/16 7.92						277148-3	16.2		
				3/8 9.52						277148-4	15.3		
				10	Sheared	**.250** 6.35	**1.84** 46.74	**.492** 12.50	**.54** 13.72	277154-1	15.2		
				1/4 6.35						277148-7	15.0		
4 **42420** 21.9	**6** **26818** 13.8	**.276–.305** 7.01–7.75	**.082** 2.08	**8**	—	**.310** 7.88	**2.00** 50.8	**.627** 15.92	**.53** 13.46	277149-5	—	1752877-1 or 1752787-1	68008
				1/4 6.35						277149-2	19.4		
				5/16 7.92						277149-3	18.9		
				3/8 9.52						277149-4	18.5		
				1/4 6.35	Sheared	**.310** 7.88	**2.00** 50.8	**.627** 15.92	**.53** 13.46	277149-8	18.5		
2 **67872** 35.0	**4** **42615** 22.0	**.340–.380** 8.64–9.65	**.093** 2.36	**1/4** 6.35	—	**.335** 8.51	**2.37** 60.20	**.675** 17.15	**.54** 13.72	277150-1	36.0	1752877-1 or 1752787-1	68009
				3/8 9.52						277150-3	34.0		
				1/4 6.35	Sheared	**.250** 6.35	**2.30** 58.42	**.492** 12.50	**.60** 15.24	277155-1	33.5		
1/0 **107464** 55.5	**2** **66500** 34.3	**.425–.470** 10.79–11.94	**.101** 2.57	**1/4** 6.35	Short	**.401** 10.19	**2.51** 63.75	**.812** 20.62	**.49** 12.45	277151-3	—	1752877-1 or 1752787-1	68010-1
				3/8 9.52						277151-1	53.3		
				5/16 7.92						277151-7	—		
				1/4 6.35	Long	**.448** 11.38	**2.73** 69.34	**.812** 20.62	**.72** 18.29	277151-5	57.0		
2/0 **138168** 71.3	**1/0** **104500** 53.9	**.500–.550** 12.7–13.97	**.128** 3.25	**1/4** 6.35	Short	**.451** 11.46	**2.81** 71.37	**.911** 23.14	**.51** 12.95	277152-1	—	1752877-1 or 1752787-1	314964-1 or 68011-1
				3/8 9.52						277152-2	76.3		
				5/16 7.92	Long	**.451** 11.46	**3.05** 77.47	**.911** 23.14	**.75** 19.05	277152-3	80.0		
				3/8 9.52						277152-4	81.0		
				1/2 12.7						277152-5	78.0		
				3/8 9.52	Long (Narrow)	**.430** 10.93	**3.05** 77.47	**.850** 21.59	**.75** 19.05	55944-1	81.0		
3/0 **168872** 87.2	**2/0** **133000** 68.6	**.520–.645** 13.21–16.38	**.132** 3.35	**3/8** 9.52	—	**.440** 11.18	**3.21** 81.53	**1.00** 25.4	**.73** 18.54	277153-1	103.0	1752787-1	59877-1
4/0 **214928** 110.94	**3/0** **166500** 85.94	**.590–.680** 14.99–17.27	**.177** 4.50	**3/8** 9.52	—	**.440** 11.18	**3.11** 79.00	**1.00** 25.4	**.73** 18.54	55995-1 (55995-2)	100	1752787-1	314948-1
				1/2 12.7						184113-1	98.0		

*Aluminum 8 to 2 = ±3 grams; aluminum 1/0 to 3/0 = ±5 grams

Dimensions are shown for reference purposes only. Specifications subject to change.

Dimensions are in millimeters unless otherwise specified.

USA: +1 800 522 6752
Asia Pacific: +86 0 400 820 6015
UK: +44 800 267 666

For additional support numbers please visit www.te.com

Double Hole Ring Tongue Terminals

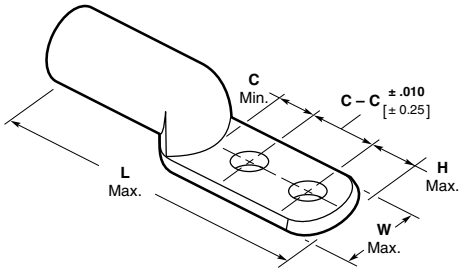

Wire Size Circular Mils mm² Aluminum	Wire Size Circular Mils mm² Copper	Insul. Dia. Range	Tongue Thickness (Nom.)	Stud Size	Tongue Type	Dimensions H Max.	Dimensions L Max.	Dimensions W Max.	Dimensions C – C	Dimensions C Min.	Part Number	Weight Grams*	Tooling for Power Unit 1804700-1 or -2 Heads	Tooling for Power Unit 1804700-1 or -2 Die
6 **28280** 14.6	**8** **16983** 8.8	**.225–.250** 5.72–6.35	**.088** 2.24	**1/4** 6.35 **3/8** 9.52	Two Hole	**.38** 9.65	**2.89** 73.41	**.63** 16.00	**1.00** 25.4	**.44** 11.18	55832-1 55832-2	24 23	1752877-1 or 1752787-1	68007
4 **42420** 21.9	**6** **26818** 13.8	**.276–.305** 7.01–7.75	**.082** 2.08	**1/4** 6.35 **3/8** 9.52	Two Hole	**.38** 9.65	**2.94** 74.68	**.63** 16.00	**1.00** 25.4	**.44** 11.18	55833-1 (55834-1) 55833-2 (55834-2)	26 25	1752877-1 or 1752787-1	68008
2 **67872** 35.0	**4** **42615** 22.0	**.340–.380** 8.64–9.65	**.093** 2.36	**1/4** 6.35 **3/8** 9.52	Two Hole	**.38** 9.65	**3.27** 83.06	**.68** 17.27	**1.00** 25.4	**.44** 11.18	55835-1 (55836-1) 55835-2 (55836-2)	44 43	1752877-1 or 1752787-1	68009
1/0 **107464** 55.5	**2** **66500** 34.3	**.425–.470** 10.79–11.94	**.101** 2.57	**3/8** 9.52	Two Hole	**.38** 9.65	**3.39** 86.11	**.81** 20.57	**1.00** 25.4	**.44** 11.18	55837-1 (55838-1)	62	1752877-1 or 1752787-1	68010-1
2/0 **138168** 71.3	**1/0** **104500** 53.9	**.500–.550** 12.7–13.97	**.128** 3.25	**3/8** 9.52	Two Hole	**.38** 9.65	**3.66** 92.96	**.91** 23.11	**1.00** 25.4	**.44** 11.18	55839-1 (55844-1)	91	1752877-1 or 1752787-1	314964-1 or 68011-1
3/0 **168872** 87.2	**2/0** **133000** 68.6	**.520–.645** 13.21–16.38	**.132** 3.35	**3/8** 9.52	Two Hole	**.38** 9.65	**3.82** 97.03	**1.00** 25.4	**1.00** 25.4	**.44** 11.18	55840-1	113	1752787-1	59877-1
4/0 **214928** 110.94	**3/0** **166500** 85.94	**.590–.680** 14.99–17.27	**.177** 4.50	**3/8** 9.52	Two Hole	**.38** 9.65	**3.72** 94.49	**1.00** 25.4	**1.00** 25.4	**.44** 11.18	(55841-1)	113	1752787-1	314948-1

Note: Part numbers with ( ) are silver plated, part numbers without are tin plated.
* Aluminum 8 to 2 = ±3 grams; aluminum 1/0 to 4/0 = ±5 grams.

Flag Terminals

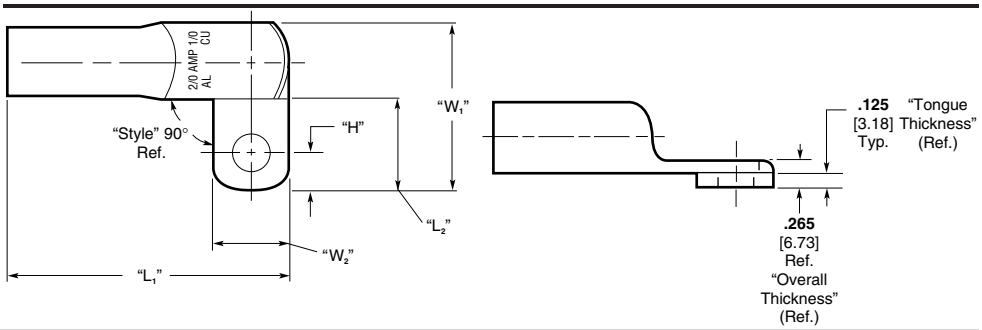

Wire Size Circular Mils mm² Aluminum	Wire Size Circular Mils mm² Copper	Insul. Dia. Range	Tongue Thickness (Ref.)	Stud Size	Tongue Style	Dimensions H Max.	Dimensions L_2 Max.	Dimensions L_2 Min.	Dimensions W_1 Max.	Dimensions W_2 Max.	Part Number	Weight Grams*	Tooling for Power Unit 1804700-1 or -2 Heads	Tooling for Power Unit 1804700-1 or -2 Die
2/0 **138168** 71.3	**1/0** **104500** 53.9	**.500–.550** 12.7–13.97	**.125** 3.18	**3/8** 9.52	One Hole 90° Right Hand	**.43** 10.9	**3.185** 80.90	**.970** 24.64	**1.870** 47.50	**.850** 21.59	55982-1	109	1752877-1 or 1752787-1	314964-1 or 68011-1

* Aluminum 8 to 2 = ±3 grams; aluminum 1/0 to 4/0 = ±5 grams.

Dimensions are shown for reference purposes only. Specifications subject to change.

Dimensions are in millimeters unless otherwise specified.

USA: +1 800 522 6752
Asia Pacific: +86 0 400 820 6015
UK: +44 800 267 666

For additional support numbers please visit www.te.com

Standard Butt Splices

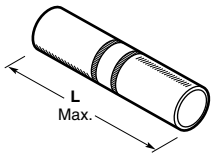

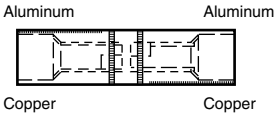

Wire Size* Circular Mils mm² Aluminum	Wire Size* Circular Mils mm² Copper	Insul. Dia. Range	L Max.	Part Number	Weight Grams**	Tooling for Power Unit 1804700-1 or -2 Heads	Tooling for Power Unit 1804700-1 or -2 Die
8 **16564** 8.6	**10** **9354** 4.8	**.182–.200** 4.62–5.08	**1.41** 35.81	277156-1	10.2	1752877-1 or 1752787-1	68006
6 **28280** 14.6	**8** **16983** 8.8	**.225–.250** 5.72–6.35	**1.80** 45.72	277157-1	16.9	1752877-1 or 1752787-1	68007
4 **42420** 21.9	**6** **26818** 13.8	**.276–.305** 7.01–7.75	**2.17** 55.12	277158-1	26.8	1752877-1 or 1752787-1	68008
2 **67872** 35.0	**4** **42615** 22.0	**.340–.380** 8.64–9.65	**2.54** 64.52	277159-1	50.3	1752877-1 or 1752787-1	68009
1/0 **107464** 55.5	**2** **66500** 34.3	**.425–.470** 10.79–11.94	**2.67** 67.82	277160-1	76.0	1752877-1 or 1752787-1	68010-1
2/0 **138168** 71.3	**1/0** **104500** 53.9	**.500–.550** 12.70–13.97	**3.01** 76.45	277161-1	107.7	1752877-1 or 1752787-1	68011-1 or 314964-1
3/0 **168872** 87.2	**2/0** **133000** 68.6	**.520–.645** 13.21–16.38	**3.26** 82.80	277162-1	127.5	1752787-1	59877-1

* For aluminum-to-aluminum applications, splices will accept the same wire size at either end. For aluminum-to-copper applications, however, the size of the copper wire must be "stepped down" two wire sizes to compensate for differences in the electrical ratings of copper and aluminum.
** Aluminum 8 to 2 = ±3 grams; aluminum 1/0 to 3/0 = ±5 grams

Transitional Butt Splices

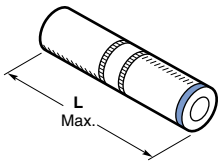

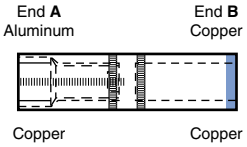

Wire Size Circular Mils mm² End A	Wire Size Circular Mils mm² End B	Insul. Dia. Range End A	Insul. Dia. Range End B	L Max.	Part Numbers	Weight Grams*	Tooling for Power Unit 1804700-1 or -2 Heads	Tooling for Power Unit 1804700-1 or -2 Die
6 **28280** 14.6	**6** **26818** 13.8	**.225–.250** 5.72–6.35	**.225–.250** 5.72–6.35	**1.80** 45.72	55984-1**	16	1752877-1 or 1752787-1	68007
4 **42420** 21.9	**8** **16983** 8.8	**.276–.305** 7.01–7.75	**.210–.255** 5.33–6.48	**1.91** 48.51	277164-1	26.5	1752877-1 or 1752787-1	68008
4 **42420** 21.9	**4** **42615** 22.0	**.276–.305** 7.01–7.75	**.276–.305** 7.01–7.75	**2.17** 55.12	277165-1**	26.0	1752877-1 or 1752787-1	68008
1/0 **107464** 55.5	**4** **42615** 22.0	**.425–.470** 10.80–11.94	**.276–.305** 7.01–7.75	**2.70** 68.58	277163-1	92.5	1752877-1 or 1752787-1	68010-1
3/0 **168872** 87.2	**1/0** **104500** 53.9	**.520–.645** 13.21–16.38	**.430–.495** 10.92–12.57	**3.26** 82.80	277168-1	128.5	1752787-1	59877-1

* ±10 grams
** Transitional splice test amperage is for aluminum wire.

Dimensions are shown for reference purposes only. Specifications subject to change.

Dimensions are in millimeters unless otherwise specified.

USA: +1 800 522 6752
Asia Pacific: +86 0 400 820 6015
UK: +44 800 267 666

For additional support numbers please visit www.te.com

Application Tooling

The AMP COPALUM Sealed Terminals and Splices are designed to be terminated with precision die sets, crimping heads, and hydraulic power units. The die set to use will depend on the conductor material size to be terminated. Both crimping heads can be used for the smaller conductor sizes. The largest conductor sizes will require the use of the heavier head. Hydraulic power can be provided by either the Electric/Hydraulic Power Unit or the Hydraulic Foot Pump.

Crimping Head
1752787-1
(408-8914)

Crimping Head
1752877-1
(408-8956)

Typical Die Set
(408-2281)

DYNA-CRIMP Electric-Hydraulic Power Unit

The DYNA-CRIMP Power Unit is an electric hydraulic tool. It can accommodate various heads and dies for terminating AMP terminals and splices ranging in size from 8 to 1500 MCM. A complete accessory line is also available with the tool for use in portable and stationary applications as well as for multiple-head crimping.

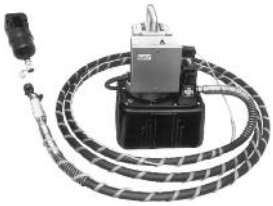

DYNA-CRIMP Electric-Hydraulic Power Unit
(Includes Pressure Release)

115 Volts (60 Hz) — 1804700-1
230 Volts (50/60 Hz) — 1804700-2
(409-10081)

Hydraulic Hand Pump
1583661-1

Hydraulic Foot Pump
1583659-1
Use with Hose Assembly1583662-[ ]

Wire Size AWG		Crimp Tool Components		
Aluminum	Copper	Die Sets	Heads	Power Units
8	10	68006	1752877-1* or 1752787-1**	1804700-1 1804700-2 or 1583659-1
6	8	68007		
4	6	68008		
2	4	68009		
1/0	2	68010-1		
2/0	1/0	68011-1		
		314964-1		
3/0	2/0	59877-1		
4/0	3/0	314948-1		

*For aluminum conductor range of 8 through 1/0 and copper conductor range of 10 through 2.
**For aluminum conductor range of 8 through 4/0 and copper conductor range of 10 through 3/0.
***Portable–low pressure crimp die.

Accessory Power Controls and Hoses For DYNA-CRIMP Electric-Hydraulic Power Unit

Consult the table to the right for accessory power controls and hoses. Control and hose accessories must be ordered separately.

If electric hydraulic tool is to be used in portable applications, a handle control and hose assembly should be used.

For stationary applications, a foot switch assembly and hose assembly will be necessary.

Multidirectional valves are used when more than one crimping head is permanently attached to the tool.

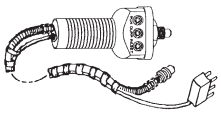

Handle Control

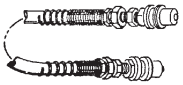

Hose Assembly

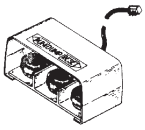

Foot Control

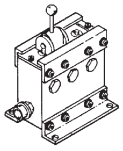

Multidirectional Valve

For use with Power Unit No.	Accessory Description	Accessory Part Number	Remarks
1804700-1 1804700-2	7 ft. [2.13 m] Handle Control Assembly — Hose and Cord 15 ft. [4.57 m] Handle Control Assembly — Hose and Cord 21 ft. [6.4 m] Handle Control Assembly — Hose and Cord	1901775-1 1901776-1 1901777-1	Pressure Release included with handle control
	15 ft. [4.57 m] Foot Switch Assembly	68284-1	Needs Hose Assembly
	6 ft. [1.83 m] Hose Assembly 10 ft. [3.05 m] Hose Assembly 20 ft. [6.10 m] Hose Assembly	1583662-1 1583662-2 1583662-3	68284-1 Foot Switch or Foot Pump Assembly needed with these Hose Assemblies
1804700-1 1804700-2	3-Way Multi-Directional Valve 3-Way Multi-Directional Valve (Elec. Control)	1901782-1 1901783-1	For use with Foot Switch only

www.tooling.tycoelectronics.com
www.tooling.tycoelectronics.com/europe

Catalog 1308940
Revised 9-14

www.te.com

Dimensions are shown for reference purposes only. Specifications subject to change.

Dimensions are in millimeters unless otherwise specified.

USA: +1 800 522 6752
Asia Pacific: +86 0 400 820 6015
UK: +44 800 267 666

For additional support numbers please visit www.te.com

Introduction

Product Facts

- **Pre-insulated terminal designed for complete and uniform reliability in difficult circuit environments**
- **PIDG Terminals consist of tin plated copper or tin plated phosphor bronze body for spring spades with a copper sleeve and insulation sleeve fitted over terminal barrel**
- **Design of the tool dies and construction of the terminal ensures uniform insulation thickness under crimping pressure, transmitting this pressure evenly to the center of the crimp area**

The AMP Mated Tool/Terminal Concept

- **AMP compression crimping produces crimps for a given size wire and terminal that are precisely alike in appearance and performance**
- **Terminal and crimping tool are designed as precisely matched devices**
- **Dies are precision-engineered from the finest hard-metal alloys**
- **Crimping pressure is controlled by a ratchet device on the hand tool or a corresponding pre-calibration in the crimping jaws of AMP automated crimping machines**

The Crimp

- **Crimping pressure can neither overstress nor understress the terminal barrel — machined dies fully bottom to the precise crimp height**
- **Resulting termination is free of contamination**
- **Resistant to shock and critical environments**
- **Tensile strength approaches that of the wire itself**
- **PIDG Terminals meet or exceed the requirements of MIL-T-7928, Type II, Class 1 and 2**

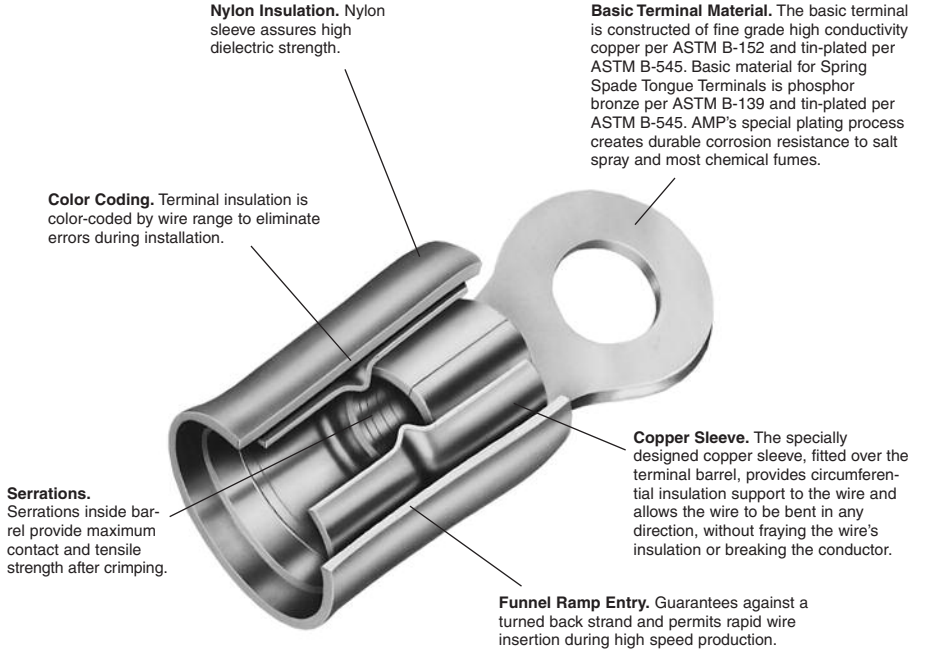

Note: Over size expansions are provided in vinyl insulation only.

Temperature Rating: 221°F [105°C] Max.

AMP PIDG Terminals (Use PIDG Tooling)

AMP Wire Range	Listed	LR7189 Certified
22-16	22-16 Solid or Stranded	300 V Max., 221°F [105°C]. Max.[1]
16-14	16-14 Solid or Stranded	
12-10	12-10 Solid or Stranded	

Note: 22-16 terminals are stamped 22-18 in accordance with MIL-T-7928.
[1]UL & CSA — Nylon

AMP PIDG Nylon Butt Window Splice (Use PIDG Tooling)

AMP Wire Range	Listed	LR7189 Certified
22-16	22-16 Stranded or Solid	300 V Max., 221°F [105°C]. Max.
16-14	16-14 Stranded or Solid	
12-10	12-10 Stranded or Solid	

Note: 22-16 splices are stamped 22-18 in accordance with MIL-T-7928.

Catalog 1308940
Revised 9-14
www.te.com

Dimensions are shown for reference purposes only. Specifications subject to change.
Dimensions are in millimeters unless otherwise specified.
USA: +1 800 522 6752
Asia Pacific: +86 0 400 820 6015
UK: +44 800 267 666
For additional support numbers please visit www.te.com

Ring Tongue Terminals — Nylon

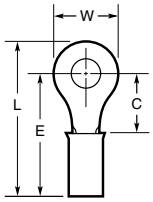

Material and Finish

Insulation — Nylon
Terminal Body and Metallic Sleeve — Copper per ASTM B-152
Plating — Tin per ASTM B-545

Military Specifications MS25036

Wire Size Circular Mils [mm²]	Tongue Material Thickness Max.	Stud Size	Dimensions W	C Min.	E Max.	L Max.	Terminal Insulation Color	Wire Insulation Diameter Max.	Class	MS25036 Dash Numbers	Part Numbers Loose Piece	Tape Mounted
26-24 238-475 [0.12-0.24]	.029 0.74	2 M2	.203 5.16	.211 5.36	.632 16.05	.739 18.77	Yellow	.105 2.67	1 & 2	143	54310-1†	—
		4	.203 5.16	.211 5.36	.632 16.05	.736 18.69	Yellow	.105 2.67	1 & 2	144	52189†	—
		6 M3.5	.250 6.35	.243 6.17	.664 16.87	.792 20.12	Yellow	.105 2.67	1 & 2	145	53073†	—
		8 M4	.281 7.14	.250 6.35	.671 17.04	.814 20.68	Yellow	.105 2.67	1 & 2	146	54311-1†	—
		10	.312 7.92	.281 7.14	.702 17.83	.868 22.05	Yellow	.105 2.67	1 & 2	147	54312-1†	—
									2		—	54312-2†
26-22 202-810 [0.10-0.41]	.020 0.51	2 M2	.203 5.16	.211 5.36	.542 13.77	.646 16.41	Yellow	.082 2.08	2	143	323913	—
		4	.203 5.16	.211 5.36	.542 13.77	.646 16.41	Yellow	.082 2.08	2	144	323914*	2-323914-1
		8 M4	.250 6.35	.281 7.14	.612 15.54	.740 18.80	Yellow	.082 2.08	2	146	323916	2-323916-1
		10	.250 6.35	.281 7.14	.612 15.54	.740 18.80	Yellow	.082 2.08	2	147	324075*	2-324075-1
22-16 509-3,260 [0.26-1.65]	.033 0.84	4	.218 5.54	.156 3.96	.560 14.22	.672 17.07	Red	.125 3.18	1 & 2	148	320553	—
									2		—	2-320553-2
			.218 5.54	.156 3.96	.560 14.22	.672 17.07	Red	.140 3.56	1 & 2	148	31880*	—
									2		—	2-31880-1
		6 M3.5	.218 5.54	.156 3.96	.560 14.22	.672 17.07	Red	.125 3.18	1 & 2	101	36149*	—
									2		—	2-36149-2
			.218 5.54	.156 3.96	.560 14.22	.672 17.07	Red	.140 3.56	1 & 2	101	36150*	—
									2		—	2-36150-1
			.250 6.35	.250 6.35	.654 16.61	.782 19.86	Red	.125 3.18	1 & 2	102	51863*	—
									2		—	51863-1
		8 M4	.312 7.92	.281 7.14	.685 17.40	.844 21.44	Red	.125 3.18	1 & 2	149	320551*	—
									2		—	2-320551-1
			.312 7.92	.281 7.14	.685 17.40	.844 21.44	Red	.140 3.56	1 & 2	149	31890*	—
									2		—	2-31890-2
		10	.312 7.92	.281 7.14	.685 17.40	.844 21.44	Red	.125 3.18	1 & 2	103	36153*	—
									2		—	2-36153-2
			.312 7.92	.281 7.14	.685 17.40	.844 21.44	Red	.140 3.56	1 & 2	103	36154*	—
									2		—	2-36154-2
		1/4 M6	.469 11.91	.437 11.10	.841 21.36	1.078 27.38	Red	.125 3.18	1 & 2	150	320571*	—
									2		—	2-320571-2
			.469 11.91	.437 11.10	.841 21.36	1.078 27.38	Red	.140 3.56	1 & 2	150	31894*	—
									2		—	2-31894-2
22-16 509-3,260 [0.26-1.65]	.033 0.84	5/16 M8	.469 11.91	.437 11.10	.841 21.36	1.078 27.38	Red	.125 3.18	1 & 2	104	320572*	—
									2		—	2-320572-1
			.469 11.91	.437 11.10	.841 21.36	1.078 27.38	Red	.140 3.56	1 & 2	104	31895*	—
									2		—	2-31895-1
		3/8	.531 13.49	.546 13.87	.950 24.13	1.218 30.94	Red	.125 3.18	1 & 2	105	320573*	—
									2		—	2-320573-4
			.531 13.49	.546 13.87	.950 24.13	1.218 30.94	Red	.140 3.56	1 & 2	105	31897*	—
									2		—	2-31897-2
		1/2 M12	.713 18.11	.530 13.46	.934 23.72	1.293 32.84	Red	.125 3.18	1 & 2	151	328975*	—

*Available in small packaging quantities.
Note: "C" dimension applies from edge of metal wire barrel to center of stud hole.
†Must be crimped with 22-18 or 22-16 PIDG (red) Tooling.

Ring Tongue Terminals — Nylon (Continued)

Material and Finish

Insulation — Nylon
Terminal Body and Metallic
Sleeve — Copper per ASTM B-152
Plating — Tin per ASTM B-545

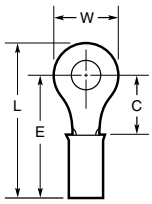

Military Specifications MS25036 (Continued)

Wire Size Circular Mils [mm²]	Tongue Material Thickness Max.	Stud Size	Dimensions W	C Min.	E Max.	L Max.	Terminal Insulation Color	Wire Insulation Diameter Max.	Class	MS25036 Dash Numbers	Part Numbers Loose Piece	Tape Mounted
16-14 2,050-5,180 [1.04-2.62]	.033 0.84	4	.250 6.35	.171 4.34	.575 14.61	.703 17.86	Blue	.150 3.81	1 & 2	152	324159*	—
		6 M3.5	.250 6.35	.171 4.34	.575 14.61	.703 17.86	Blue	.150 3.81	1 & 2	106	320561	—
									2		—	2-320561-2
			.312 7.92	.281 7.14	.685 17.40	.844 21.44	Blue	.150 3.81	1 & 2	107	51864*	—
									2		—	51864-3
		8 M4	.312 7.92	.281 7.14	.685 17.40	.844 21.44	Blue	.150 3.81	1 & 2	153	51864-1*	—
									2		—	51864-5
		10	.312 7.92	.281 7.14	.685 17.40	.844 21.44	Blue	.150 3.81	1 & 2	108	51864-2*	—
									2		—	51864-4
		1/4 M6	.469 11.91	.437 11.10	.841 21.36	1.078 27.38	Blue	.150 3.81	1 & 2	154	320563*	—
									2		—	2-320563-2
		5/16 M8	.469 11.91	.437 11.10	.841 21.36	1.078 27.38	Blue	.150 3.81	1 & 2	109	320575*	—
									2		—	2-320575-1
		3/8	.531 13.49	.546 13.87	.950 24.13	1.218 30.94	Blue	.150 3.81	1 & 2	110	320564*	—
									2		—	2-320564-3
		1/2 M12	.713 18.11	.530 13.46	.934 23.72	1.293 32.84	Blue	.150 3.81	1 & 2	155	328976	—
12-10 5,180-13,100 [2.62-6.64]	.042 1.07	6 M3.5	.375 9.53	.302 7.67	.893 22.68	1.083 27.51	Yellow	.230 5.84	1 & 2	111	320567*	—
									2		—	2-320567-2
			.375 9.53	.302 7.67	.893 22.68	1.083 27.51	Yellow	.250 6.35	1 & 2	111	35107	—
									2		—	2-35107-1
		8 M4	.375 9.53	.302 7.67	.893 22.68	1.083 27.51	Yellow	.230 5.84	1 & 2	156	320568*	—
									2		—	2-320568-1
			.375 9.53	.302 7.67	.893 22.68	1.083 27.51	Yellow	.250 6.35	1 & 2	156	35108*	—
									2		—	2-35108-1
		10	.375 9.53	.302 7.67	.893 22.68	1.083 27.51	Yellow	.230 5.84	1 & 2	112	36161*	—
									2		—	2-36161-2
		10	.375 9.53	.302 7.67	.893 22.68	1.083 27.51	Yellow	.250 6.35	1 & 2	112	35109*	—
									2		—	2-35109-1
		1/4 M6	.531 13.49	.468 11.89	1.054 26.77	1.322 33.58	Yellow	.230 5.84	1 & 2	157	320569*	—
									2		—	2-320569-3
			.531 13.49	.468 11.89	1.054 26.77	1.322 33.58	Yellow	.250 6.35	1 & 2	157	35110*	—
									2		—	2-35110-1
		5/16 M8	.531 13.49	.468 11.89	1.054 26.77	1.322 33.58	Yellow	.230 5.84	1 & 2	113	320576*	—
									2		—	2-320576-1
			.531 13.49	.468 11.89	1.054 26.77	1.322 33.58	Yellow	.250 6.35	1 & 2	113	35111*	—
									2		—	2-35111-1
		3/8	.593 15.06	.531 13.49	1.115 28.32	1.414 35.92	Yellow	.230 5.84	1 & 2	114	320577*	—
									2		—	2-320577-3
			.593 15.06	.531 13.49	1.115 28.32	1.414 35.92	Yellow	.250 6.35	1 & 2	114	35112*	—
		1/2 M12	.715 18.16	.474 12.04	1.065 27.05	1.414 35.92	Yellow	.230 5.84	2	158	52077	—

*Available in small packaging quantities.
Note: "C" dimension applies from edge of metal wire barrel to center of stud hole.

Dimensions are shown for reference purposes only. Specifications subject to change.
Dimensions are in millimeters unless otherwise specified.
USA: +1 800 522 6752
Asia Pacific: +86 0 400 820 6015
UK: +44 800 267 666
For additional support numbers please visit www.te.com

Ring Tongue Terminals — Insulation Restricting

Material and Finish

Insulation — Nylon
Terminal Body — Copper per ASTM B-152
Plating — Tin per ASTM B-545

Metallic Sleeve — Copper per ASTM B-152
Plating — Nickel per QQ-N-290 or Tin per ASTM B-545

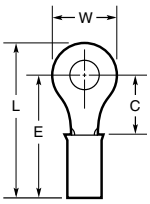

Military Specifications M7928/1

Wire Size Circular Mils [mm²]	Tongue Material Thickness Max.	Stud Size	Dimensions W	C Min.	E Max.	L Max.	Terminal Insulation Color Solid/Stripe	Wire Insulation Diameter Max.	Class	M7928/1 Dash Numbers	Part Numbers Loose Piece	Tape Mounted
26 304 [0.15]	.029 0.74	2 M2	.203 5.16	.211 5.36	.632 16.05	.739 18.77	Yellow/Black	.026-.055 0.66-1.40	1 & 2	1	53078†	—
		4	.203 5.16	.211 5.36	.632 16.05	.736 18.69	Yellow/Black	.026-.055 0.66-1.40	1 & 2	2	53049†	—
		6 M3.5	.250 6.35	.243 6.17	.664 16.87	.792 20.12	Yellow/Black	.026-.055 0.66-1.40	1 & 2	3	53050†	—
		8 M4	.281 7.14	.250 6.35	.671 17.04	.814 20.68	Yellow/Black	.026-.055 0.66-1.40	1 & 2	4	53051†	—
		10	.312 7.92	.281 7.14	.702 17.83	.863 21.92	Yellow/Black	.026-.055 0.66-1.40	1 & 2	5	53057†	—
24 475 [0.24]	.029 0.74	2 M2	.203 5.16	.211 5.36	.632 16.05	.739 18.77	Yellow/Blue	.031-.055 0.79-1.40	1 & 2	6	53053†	—
		4	.203 5.16	.211 5.36	.632 16.05	.736 18.69	Yellow/Blue	.031-.055 0.79-1.40	1 & 2	7	53054†	—
		6 M3.5	.250 6.35	.243 6.17	.664 16.87	.792 20.12	Yellow/Blue	.031-.055 0.79-1.40	1 & 2	8	53055†	—
		8 M4	.281 7.14	.250 6.35	.671 17.04	.814 20.68	Yellow/Blue	.031-.055 0.79-1.40	1 & 2	9	53056†	—
		10	.312 7.92	.281 7.14	.702 17.83	.860 21.84	Yellow/Blue	.031-.055 0.79-1.40	1 & 2	10	53057†	—
22 754 [0.38]	.033 0.84	4	.218 5.54	.156 3.96	.622 15.80	.734 18.64	Red/Green	.038-.110 0.97-2.79	1 & 2	11	52273*	—
		6 M3.5	.218 5.54	.156 3.96	.622 15.80	.734 18.64	Red/Green	.038-.110 0.97-2.79	1 & 2	12	2-36149-3*	—
			.250 6.35	.250 6.35	.716 18.19	.844 21.44	Red/Green	.038-.110 0.97-2.79	1 & 2 / 2	13	51863-2* / —	— / 51863-5
		8 M4	.312 7.92	.281 7.14	.747 18.97	.906 23.01	Red/Green	.038-.110 0.97-2.79	1 & 2 / 2	14	1-320551-2* / —	— / 1-320551-5
		1/4 M6	.469 11.91	.437 11.10	.903 22.94	1.140 28.96	Red/Green	.038-.110 0.97-2.79	1 & 2	16	2-320571-3	—
		5/16 M8	.469 11.91	.437 11.10	.903 22.94	1.140 28.96	Red/Green	.038-.110 0.97-2.79	1 & 2	17	2-320572-2	—
		3/8	.531 13.49	.546 13.87	1.012 25.70	1.280 32.51	Red/Green	.038-.110 0.97-2.79	1 & 2	18	2-320573-1	—
		1/2 M12	.713 18.11	.530 13.46	.996 25.30	1.355 34.42	Red/Green	.038-.110 0.97-2.79	1 & 2	19	2-328975-1	—
	.031 0.79	10	.312 7.92	.281 7.14	.747 18.97	.906 23.01	Red/Green	.038-.110 0.97-2.79	1 & 2 / 2	15	2-36153-3* / —	— / 2-36153-6
20 1,186 [0.60]	.033 0.84	4	.218 5.54	.156 3.96	.622 15.80	.734 18.64	Red/Red	.046-.110 1.17-2.79	1 & 2	20	52273-1*	—
		6 M3.5	.218 5.54	.156 3.96	.622 15.80	.734 18.64	Red/Red	.046-.110 1.17-2.79	1 & 2	21	2-36149-4*	—
			.250 6.35	.250 6.35	.716 18.19	.844 21.44	Red/Red	.046-.110 1.17-2.79	1 & 2 / 2	22	51863-3 / —	— / 51863-6
		8 M4	.312 7.92	.281 7.14	.747 18.97	.906 23.01	Red/Red	.046-.110 1.17-2.79	1 & 2	23	1-320551-3*	—
		10	.312 7.92	.281 7.14	.747 18.97	.906 23.01	Red/Red	.046-.110 1.17-2.79	1 & 2 / 2	24	2-36153-4* / —	— / 2-36153-8
		1/4 M6	.469 11.91	.437 11.10	.903 22.94	1.140 28.96	Red/Red	.046-.110 1.17-2.79	1 & 2	25	2-320571-4	—
		5/16 M8	.469 11.91	.437 11.10	.903 22.94	1.140 28.96	Red/Red	.046-.110 1.17-2.79	1 & 2	26	2-320572-3	—
		3/8	.531 13.49	.546 13.87	1.012 25.70	1.280 32.51	Red/Red	.046-.110 1.17-2.79	1 & 2	27	2-320573-2	—
		1/2 M12	.713 18.11	.530 13.46	.996 25.30	1.355 34.42	Red/Red	.046-.110 1.17-2.79	1 & 2	28	2-328975-2	—

*Available in small packaging quantities.
†Must be crimped with 22-18 or 22-16 PIDG (red) Tooling.
Note: "C" dimension applies from edge of metal wire barrel to center of stud hole.

Catalog 1308940
Revised 9-14

www.te.com

Dimensions are shown for reference purposes only. Specifications subject to change.

Dimensions are in millimeters unless otherwise specified.

USA: +1 800 522 6752
Asia Pacific: +86 0 400 820 6015
UK: +44 800 267 666

For additional support numbers please visit www.te.com

Ring Tongue Terminals — Insulation Restricting (Continued)

Material and Finish

Insulation — Nylon
Terminal Body — Copper per ASTM B-152
Plating — Tin per ASTM B-545

Metallic Sleeve — Copper per ASTM B-152
Plating — Nickel per QQ-N-290 or Tin per ASTM B-545

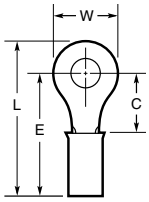

Military Specifications M7928/1 (Continued)

Wire Size Circular Mils [mm²]	Tongue Material Thickness Max.	Stud Size	Dimensions W	C Min.	E Max.	L Max.	Terminal Insulation Color Solid/Stripe	Wire Insulation Diameter Max.	Class	M7928/1 Dash Numbers	Part Numbers Loose Piece	Tape Mounted
18 1,900 [0.96]	.033 0.84	4	.218 5.54	.156 3.96	.622 15.80	.734 18.64	Red/White	.056-.110 1.42-2.79	1 & 2	29	52273-2*	—
		6 M3.5	.218 5.54	.156 3.96	.622 15.80	.734 18.64	Red/White	.056-.110 1.42-2.79	1 & 2	30	2-36149-5*	—
			.250 6.35	.250 6.35	.716 18.19	.844 21.44	Red/White	.056-.110 1.42-2.79	1 & 2	31	51863-4*	—
									2		—	51863-7
		8 M4	.312 7.92	.281 7.14	.747 18.97	.906 23.01	Red/White	.056-.110 1.42-2.79	1 & 2	32	1-320551-4*	—
									2		—	1-320551-8
		10	.312 7.92	.281 7.14	.747 18.97	.906 23.01	Red/White	.056-.110 1.42-2.79	1 & 2	33	2-36153-5*	—
									2		—	2-36153-9
		1/4 M6	.469 11.91	.437 11.10	.903 22.94	1.140 28.96	Red/White	.056-.110 1.42-2.79	1 & 2	34	2-320571-5	—
		5/16 M8	.469 11.91	.437 11.10	.903 22.94	1.140 28.96	Red/White	.056-.110 1.42-2.79	1 & 2	35	2-320572-4	—
		3/8	.531 13.49	.546 13.87	1.012 25.70	1.280 32.51	Red/White	.056-.110 1.42-2.79	1 & 2	36	2-320573-3	—
		1/2 M12	.713 18.11	.530 13.46	.996 25.30	1.355 34.42	Red/White	.056-.110 1.42-2.79	1 & 2	37	2-328975-3	—
16 2,800 [1.42]	.033 0.84	4	.250 6.35	.171 4.34	.637 16.18	.765 19.43	Blue/Blue	.063-.130 1.60-3.30	1 & 2	38	52274	—
		6 M3.5	.250 6.35	.171 4.34	.637 16.18	.765 19.43	Blue/Blue	.063-.130 1.60-3.30	1 & 2	39	2-320561-3*	—
			.312 7.92	.281 7.14	.747 18.97	.906 23.01	Blue/Blue	.063-.130 1.60-3.30	1 & 2	40	51864-6*	—
									2		—	1-51864-2
		8 M4	.312 7.92	.281 7.14	.747 18.97	.906 23.01	Blue/Blue	.063-.130 1.60-3.30	1 & 2	41	1-51864-0*	—
		10	.312 7.92	.281 7.14	.747 18.97	.906 23.01	Blue/Blue	.063-.130 1.60-3.30	1 & 2	42	51864-7*	—
									2		—	1-51864-3
		1/4 M6	.469 11.91	.437 11.10	.903 22.94	1.140 28.96	Blue/Blue	.063-.130 1.60-3.30	1 & 2	43	2-320563-3	—
		5/16 M8	.469 11.91	.437 11.10	.903 22.94	1.140 28.96	Blue/Blue	.063-.130 1.60-3.30	1 & 2	44	2-320575-2	—
		3/8	.531 13.49	.546 13.87	1.012 25.70	1.280 32.51	Blue/Blue	.063-.130 1.60-3.30	1 & 2	45	2-320564-1	—
		1/2 M12	.713 18.11	.530 13.46	.996 25.30	1.355 34.42	Blue/Blue	.063-.130 1.60-3.30	1 & 2	46	2-328976-1	—
14 4,234 [2.15]	.033 0.84	4	.250 6.35	.171 4.34	.637 16.18	.765 19.43	Blue/Green	.078-.130 1.98-3.30	1 & 2	47	52274-1	—
		6 M3.5	.250 6.35	.171 4.34	.637 16.18	.765 19.43	Blue/Green	.078-.130 1.98-3.30	1 & 2	48	2-320561-4	—
			.312 7.92	.281 7.14	.747 18.97	.906 23.01	Blue/Green	.078-.130 1.98-3.30	1 & 2	49	51864-8*	—
		8 M4	.312 7.92	.281 7.14	.747 18.97	.906 23.01	Blue/Green	.078-.130 1.98-3.30	1 & 2	50	1-51864-1*	—
									2		—	1-51864-7
		10	.312 7.92	.281 7.14	.747 18.97	.906 23.01	Blue/Green	.078-.130 1.98-3.30	1 & 2	51	51864-9*	—
									2		—	1-51864-5
		1/4 M6	.469 11.91	.437 11.10	.903 22.94	1.140 28.96	Blue/Green	.078-.130 1.98-3.30	1 & 2	52	2-320563-4	—
		5/16 M8	.469 11.91	.437 11.10	.903 22.94	1.140 28.96	Blue/Green	.078-.130 1.98-3.30	1 & 2	53	2-320575-3	—
		3/8	.531 13.49	.546 13.87	1.012 25.70	1.280 32.51	Blue/Green	.078-.130 1.98-3.30	1 & 2	54	2-320564-2	—
		1/2 M12	.713 18.11	.530 13.46	.996 25.30	1.355 34.42	Blue/Green	.078-.130 1.98-3.30	1 & 2	55	2-328976-2	—

*Available in small packaging quantities.
Note: "C" dimension applies from edge of metal wire barrel to center of stud hole.

Dimensions are shown for reference purposes only. Specifications subject to change.

Dimensions are in millimeters unless otherwise specified.

USA: +1 800 522 6752
Asia Pacific: +86 0 400 820 6015
UK: +44 800 267 666

For additional support numbers please visit www.te.com

Ring Tongue Terminals — Insulation Restricting (Continued)

Material and Finish

Insulation — Nylon
Terminal Body — Copper per ASTM B-152
Plating — Tin per ASTM B-545

Metallic Sleeve — Copper per ASTM B-152
Plating — Nickel per QQ-N-290 or Tin per ASTM B-545

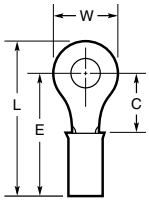

Military Specifications M7928/1 (Continued)

Wire Size Circular Mils [mm²]	Tongue Material Thickness Max.	Stud Size	Dimensions W	C Min.	E Max.	L Max.	Terminal Insulation Color Solid/Stripe	Wire Insulation Diameter Max.	Class	M7928/1 Dash Numbers	Part Numbers Loose Piece	Tape Mounted
12 6,654 [3.37]	.042 1.07	6 M3.5	.375 9.53	.302 7.67	.958 24.33	1.148 29.16	Yellow/Yellow	.095-.200 2.41-5.08	1 & 2	56	2-36161-5	—
		8 M4	.375 9.53	.302 7.67	.958 24.33	1.148 29.16	Yellow/Yellow	.095-.200 2.41-5.08	1 & 2	57	2-320568-2*	—
		10	.375 9.53	.302 7.67	.958 24.33	1.148 29.16	Yellow/Yellow	.095-.200 2.41-5.08	1 & 2	58	2-36161-3*	—
		1/4 M6	.531 13.49	.468 11.89	1.124 28.55	1.392 35.36	Yellow/Yellow	.095-.200 2.41-5.08	1 & 2	59	2-320569-5	—
		5/16 M8	.531 13.49	.468 11.89	1.124 28.55	1.392 35.36	Yellow/Yellow	.095-.200 2.41-5.08	1 & 2	60	2-320576-2	—
		3/8	.593 15.06	.531 13.49	1.187 30.15	1.486 37.74	Yellow/Yellow	.095-.200 2.41-5.08	1 & 2	61	2-320577-1	—
		1/2 M12	.715 18.16	.474 12.04	1.130 28.70	1.490 37.85	Yellow/Yellow	.095-.200 2.41-5.08	2	62	52077-1	—
10 12,066 [6.11]	.042 1.07	6 M3.5	.375 9.53	.302 7.67	.958 24.33	1.148 29.16	Yellow/Brown	.119-.200 3.02-5.08	1 & 2	63	2-36161-6	—
		8 M4	.375 9.53	.302 7.67	.958 24.33	1.148 29.16	Yellow/Brown	.119-.200 3.02-5.08	1 & 2	64	2-320568-3* —	— 2-36161-8
		10	.375 9.53	.302 7.67	.958 24.33	1.148 29.16	Yellow/Brown	.119-.200 3.02-5.08	1 & 2 2	65	2-36161-4 —	—
		1/4 M6	.531 13.49	.468 11.89	1.124 28.55	1.392 35.36	Yellow/Brown	.119-.200 3.02-5.08	1 & 2 2	66	2-320569-6 —	— 2-320569-8
		5/16 M8	.531 13.49	.468 11.89	1.124 28.55	1.392 35.36	Yellow/Brown	.119-.200 3.02-5.08	1 & 2	67	2-320576-3	—
		3/8	.593 15.06	.531 13.49	1.187 30.15	1.486 37.74	Yellow/Brown	.119-.200 3.02-5.08	1 & 2	68	2-320577-2	—
		1/2 M12	.715 18.16	.474 12.04	1.130 28.70	1.490 37.85	Yellow/Brown	.119-.200 3.02-5.08	2	69	52077-2	—

*Available in small packaging quantities.
Note: "C" dimension applies from edge of metal wire barrel to center of stud hole.

Rectangular Tongue Terminals

Material and Finish

Insulation — Nylon

Terminal Body and Metallic

Sleeve — Copper per ASTM B-152 except where noted.

Plating — Tin per ASTM B-545

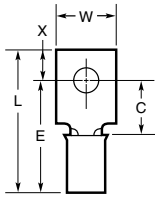

Military Specifications MS17143

Wire Size Circular Mils [mm²]	Tongue Material Thickness Max.	Stud Size	Dimensions W	C Min.	E Max.	L Max.	X	Terminal Insulation Color	Wire Insulation Diameter Max.	Class	M17143 Dash Numbers	Part Numbers Loose Piece	Tape Mounted
22-16 500 [0.26-1.65]	.033 0.84	4	.237 6.02	.237 6.02	.643 16.33	.796 20.22	.143 3.63	Red	.140 3.56	1 & 2	19	2-327968-1	—
			.237 6.02	.404 10.26	.810 20.57	1.015 25.78	.195 4.95	Red	.140 3.56	1 & 2	16	327962	—
		5 M3	.277 7.04	.277 7.04	.702 17.83	.855 21.72	.143 3.63	Red	.140 3.56	1 & 2	10	2-327950-1	—
		6 M3.5	.237 6.02	.404 10.26	.810 20.57	1.015 25.78	.195 4.95	Red	.140 3.56	1 & 2	13	2-327956-1	—
			.302 7.67	.465 11.81	.872 22.15	1.109 28.17	.227 5.77	Red	.140 3.56	1 & 2 / 2	4	2-327938-1 / —	— / 2-327938-2
		8 M4	.302 7.67	.465 11.81	.872 22.15	1.109 28.17	.227 5.77	Red	.140 3.56	1 & 2 / 2	7	327944* / —	— / 2-327944-2
			.390 9.91	.621 15.77	1.039 26.39	1.359 34.52	.310 7.87	Red	.140 3.56	1 & 2	1	327932	—
16-14 2,050-5,180 [1.04-2.62]	.033 0.84	4	.237 6.02	.237 6.02	.643 16.33	.796 20.22	.143 3.63	Blue	.150 3.81	1 & 2	20	2-327970-4	—
			.237 6.02	.404 10.26	.810 20.57	1.015 25.78	.195 4.95	Blue	.150 3.81	1 & 2	17	2-327964-4	—
		5 M3	.277 7.04	.277 7.04	.702 17.83	.855 21.72	.143 3.63	Blue	.150 3.81	1 & 2 / 2	11	2-327952-2 / —	— / 2-327952-6
		6 M3.5	.237 6.02	.404 10.26	.810 20.57	1.015 25.78	.195 4.95	Blue	.150 3.81	1 & 2	14	2-327958-4	—
			.302 7.67	.465 11.81	.872 22.15	1.109 28.17	.227 5.77	Blue	.150 3.81	1 & 2	5	2-327940-4	—
		8 M4	.302 7.67	.465 11.81	.872 22.15	1.109 28.17	.227 5.77	Blue	.150 3.81	1 & 2	8	2-327946-4	—
			.390 9.91	.621 15.77	1.039 26.39	1.359 34.52	.310 7.87	Blue	.150 3.81	1 & 2	2	2-327934-2	—
12-10 5,180-13,100 [2.62-6.64]	.042 1.07	4	.237 6.02	.237 6.02	.831 21.11	.984 24.99	.143 3.63	Yellow	.230 5.84	1 & 2	21	327972	—
			.237 6.02	.404 10.26	.998 25.35	1.203 30.56	.195 4.95	Yellow	.230 5.84	1 & 2	18	327966	—
		5 M3	.277 7.04	.277 7.04	.889 22.58	1.042 26.47	.143 3.63	Yellow	.230 5.84	1 & 2 / 2	12	327954 / —	— / 2-327954-2
		6 M3.5	.237 6.02	.404 10.26	.998 25.35	1.203 30.56	.195 4.95	Yellow	.230 5.84	1 & 2 / 2	15	2-327960-1 / —	— / 2-327960-2
			.302 7.67	.465 11.81	1.044 26.52	1.281 32.54	.227 5.77	Yellow	.230 5.84	1 & 2	6	327942	—
		8 M4	.302 7.67	.465 11.81	1.044 26.52	1.281 32.54	.227 5.77	Yellow	.230 5.84	1 & 2	9	327948	—
			.390 9.91	.621 15.77	1.211 30.76	1.531 38.89	.310 7.87	Yellow	.230 5.84	1 & 2	3	327936	—

*Available in small packaging quantities.

Note: "C" dimension applies from edge of metal wire barrel to center of stud hole.

Dimensions are shown for reference purposes only. Specifications subject to change.

Dimensions are in millimeters unless otherwise specified.

USA: +1 800 522 6752
Asia Pacific: +86 0 400 820 6015
UK: +44 800 267 666

For additional support numbers please visit www.te.com

Butt Splices

Material and Finish

Insulation Sleeve — Standard, Step Down Assembly and Nylon

Radiation Resistant — Polyvinylidene Fluoride (PVF_2)

Splice Body and Insulation Support Sleeve — Copper per ASTM B-152

Plating — Tin per ASTM B-545

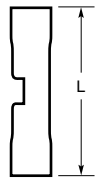

Standard and Radiation Resistant

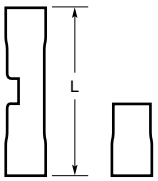

Step Down Assembly[1]

Military Specifications M7928/5

Wire Size Circular Mils[1] [mm²]	Style	Dimension L Max.	Splice Insulation Color	Wire Insulation Diameter Max.	Class	M7928/5 Dash Numbers	Part Numbers Loose Piece	Part Numbers Tape Mounted
26-24[2] 238-475 [0.12-0.24]	Standard	**.890** 22.61	Yellow	**.082** 2.08	1 & 2	1	323994	—
24-20 320-1,290 [0.16-0.65]		**1.035** 26.29	Natural	**.100** 2.54	1 & 2 / 2	2	323975 / —	— / 2-323975-3
22-16[3] 509-3,260 [0.26-1.65]		**1.265** 32.13	Red	**.125** 3.18	1 & 2 / 2	3	320559* / —	— / 2-320559-4
16-14 2,050-5,180 [1.04-2.62]		**1.265** 32.13	Blue	**.150** 3.81	1 & 2 / 2	4	320562* / —	— / 2-320562-3
12-10 5,180-13,100 [2.62-6.64]		**1.656** 42.06	Yellow	**.220** 5.59	1 & 2	5	320570*	—

*Available in small packaging quantities.
[1] When using two or more wires in either end of a butt splice, the combined cross sectional area must be within the (CMA) circular mil area range listed.
[2] 26-24 range in accordance with MIL-T-7928.
[3] 22-16 splices are 22-18 range in accordance with MIL-T-7928.

Military Specifications M7928/6

Wire Size Circular Mils[1] [mm²]	Style	Dimension L Max.	Splice Insulation Color	Wire Insulation Diameter Max.	Class	M7928/6 Dash Numbers	Part Numbers Loose Piece	Part Numbers Tape Mounted
26-24[2] 238-475 [0.12-0.24]	Radiation Resistant	**.890** 22.61	Natural w/ Yellow Stripes	**.082** 2.08	1 & 2	1	53546-1	—
24-20 320-1,290 [0.16-0.65]		**1.035** 26.29	Natural w/ White Stripes	**.100** 2.54	1 & 2 / 2	2	53547-1 / —	— / 53547-2
22-16[3] 509-3,260 [0.26-1.65]		**1.265** 32.13	Natural w/ Red Stripes	**.125** 3.18	1 & 2 / 2	3	53548-1* / —	— / 53548-2
16-14 2,050-5,180 [1.04-2.62]		**1.265** 32.13	Natural w/ Blue Stripes	**.150** 3.81	1 & 2	4	53549-1*	—

*Available in small packaging quantities.
[1] When using two or more wires in either end of a butt splice, the combined cross sectional area must be within the (CMA) circular mil area range listed.
[2] 26-24 range in accordance with MIL-T-7928.
[3] 22-16 splices are 22-18 range in accordance with MIL-T-7928.

Dimensions are shown for reference purposes only. Specifications subject to change.

Dimensions are in millimeters unless otherwise specified.

USA: +1 800 522 6752
Asia Pacific: +86 0 400 820 6015
UK: +44 800 267 666

For additional support numbers please visit www.te.com

Application Tooling

Insulated Terminals and Splices—30 to 10 AWG Wire Range

Description	Wire Range	Tools for Loose Piece Termination					Tools for Tape Mounted Terminations			
		Hand Tools		Pneumatic Tools						
		Single Wire Range	Multi-Wire Range	Heads for 626 Single Wire Range	Heads for 626 Multi-Wire Range	Dies for 69710-1[3] 217200-1[4]	Tape Dies for 69875 TAPETRONIC No Applicator Required	Tape Dies for 354500-1 AMP-O-LECTRIC Model "G" Applicator 567200-3	Tape Dies for AMPOMATOR CLS IV* Applicator 687658-1	Tape Dies for 354500-1 AMP-O-LECTRIC Model "K" Applicator 567200-2
PIDG Terminals & Splices	30-26	69163–uses 26-22 Terms.	—	—	—	—	—	—	—	—
	26-22	46121†	59275†	314537-1	—	69344	69877	69877	69877	69877
	22-16	47386†	59250† 59824-1[1] 58433-3[2]	314270-3	679305-1	47806-2	69872* 59826-1[1]	69872* 59826-1[1]	69872* 59826-1[1]	69872* 59826-1[1]
	16-14	68343-1 (.250 exp.) 47387	59250† 59824-1[1] 58433-3[2]	314269-1	679305-1	47807-1	69873* 59827-1[1]	69873* 59827-1[1]	69873* 59827-1[1]	69873* 59827-1[1]
	12-10 16-14 HD	59239-4† 59287-2 (.300 exp.)	59824-1[1] 58433-3[2]	679300-1	679305-1	47808-6 Std. 47808-5 (.300 exp.)	69874* 69897 (.300 exp.) 59828-1[1]	69874* 69897 (.300 exp.) 59828-1[1]	69874* 69897 (.300 exp.) 59828-1[1]	69874* 69897 (.300 exp.) 59828-1[1]

†Tooling with adjustable insulation crimp.
*Same die set/configuration as in hand tools.
[1]TETRA-CRIMP die configuration.
[2]PRO-CRIMPER II commercial tool not approved for UL applications.
[3]69710-1 hand tool.
[4]626 Pneumatic Tool Adapter

PIDG Terminal Style

Ring Tongue Terminals

Material and Finish

Terminal Body — Copper per QQ-C-576 with tin plating per MIL-T-10727 or gold plating per MIL-G-45204 over nickel per QQ-N-290

Insulation Support Sleeve — Copper per QQ-C-576 with tin plating per MIL-T-10727

Insulation Sleeve — PVF_2, natural color

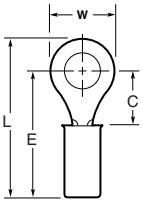

Military Specifications M7928/4

Wire Range AWG	Wire Range CMA	Tongue Thickness Max.	Wire Insulation Diameter Max.	Stripe Color Code	Stud Size	Dimensions C Min.	Dimensions W	Dimensions E Max.	Dimensions L Max.	Class	M7928/4 Dash Numbers	Part Numbers Tin Plate Loose	Part Numbers Tape Mounted
26-24	202-509	.029 0.74	.082 2.09	Yellow	2 M2	.211 5.36	.203 5.16	.632 16.05	.736 18.69	1 & 2	143	53400-1	—
					4	.211 5.36	.203 5.16	.632 16.05	.736 18.69	1 & 2	144	53401-1	—
					6 M3.5	.243 6.17	.250 6.35	.664 16.87	.792 20.12	1 & 2	145	53402-1	—
					8 M4	.250 6.35	.281 7.13	.671 17.05	.814 20.68	1 & 2	146	53403-1	—
					10	.281 7.14	.312 7.92	.702 17.83	.861 21.87	1 & 2	147	53404-1	—
24-20	320-1,290	.025 0.64	.100 2.54	White	6 M3.5	.281 7.13	.250 6.35	.631 16.03	.774 19.66	1 & 2	—	53809-2	—
22-16	509-3,250	.033 0.84	.125 3.18	Red	4	.156 3.96	.218 5.54	.560 14.23	.672 17.07	1 & 2	148	53405-1	—
					6 M3.5	.156 3.96	.218 5.54	.560 14.23	.672 17.07	1 & 2	101	53406-1	—
						.250 6.35	.250 6.35	.654 16.62	.782 19.87	1 & 2 / 2	102	53407-1 / —	— / 53407-2
					8 M4	.281 7.13	.312 7.91	.685 17.4	.844 21.44	1 & 2 / 2	149	53408-1	—
					10	.281 7.13	.312 7.92	.685 17.4	.844 21.44	1 & 2	103	53409-1	—
					1/4 M6	.437 11.10	.469 11.91	.841 21.36	1.078 27.38	1 & 2 / 2	150	53410-1 / —	— / 53410-2
					5/16 M8	.437 11.10	.469 11.91	.841 21.36	1.078 27.38	1 & 2	104	53411-1	—
					3/8	.546 13.87	.531 13.49	.950 24.13	1.218 30.94	1 & 2	105	53412-1	—
					1/2 M12	.530 13.46	.713 18.11	.934 23.72	1.293 32.84	1 & 2	151	53413-1	—
16-14	2,050-5,180	.033 0.84	.150 3.81	Blue	4	.171 4.34	.250 6.35	.575 14.61	.703 17.86	1 & 2	152	53414-1	—
					6 M3.5	.171 4.34	.250 6.35	.575 14.61	.703 17.86	1 & 2	106	53415-1	—
						.281 7.13	.312 7.92	.685 17.4	.844 21.44	1 & 2 / 2	107	53416-1 / —	— / 53416-2
					8 M4	.281 7.13	.312 7.92	.685 17.4	.844 21.44	1 & 2	153	53417-1	—
					10	.281 7.13	.312 7.92	.685 17.4	.844 21.44	1 & 2 / 2	108	53418-1 / —	— / 53418-2
					1/4 M6	.437 11.09	.469 11.91	.841 21.37	1.078 27.39	1 & 2	154	53419-1	—
					5/16 M8	.437 11.09	.469 11.91	.841 21.37	1.078 27.39	1 & 2	109	53420-1	—
					3/8	.546 13.87	.531 13.49	.950 24.13	1.218 30.94	1 & 2	110	53421-1	—
					1/2 M12	.530 13.46	.713 18.11	.934 23.72	1.293 32.84	1 & 2	155	53422-1	—

Catalog 1308940
Revised 9-14

www.te.com

Dimensions are shown for reference purposes only. Specifications subject to change.

Dimensions are in millimeters unless otherwise specified.

USA: +1 800 522 6752
Asia Pacific: +86 0 400 820 6015
UK: +44 800 267 666

For additional support numbers please visit www.te.com

PIDG Terminal Style (Continued)

Military Specifications M7928/4

Wire Range AWG	Wire Range CMA	Tongue Thickness Max.	Wire Insulation Diameter Max.	Stripe Color Code	Stud Size	Dimensions C Min.	Dimensions W	Dimensions E Max.	Dimensions L Max.	Class	M7928/4 Dash Numbers	Part Numbers Tin Plate Loose	Part Numbers Tape Mounted
12-10	5,180-13,100	**.042** 1.07	**.230** 5.84	Yellow	6 M3.5	**.302** 7.67	**.375** 9.53	**.893** 22.69	**1.083** 27.51	1 & 2	111	53423-1*	—
					8 M4	**.302** 7.67	**.375** 9.53	**.893** 22.69	**1.083** 27.51	1 & 2	156	53424-1*	—
										2		—	—
					10	**.302** 7.67	**.375** 9.53	**.893** 22.69	**1.083** 27.51	1 & 2	112	53425-1*	—
										2		—	—
					1/4 M6	**.468** 11.88	**.531** 13.48	**1.054** 26.78	**1.322** 33.58	1 & 2	157	53426-1*	—
					5/16 M8	**.468** 11.88	**.531** 13.48	**1.054** 26.78	**1.322** 33.58	1 & 2	113	53427-1*	—
					3/8	**.531** 13.48	**.593** 15.06	**1.115** 28.32	**1.414** 35.92	1 & 2	114	53428-1	—
					1/2 M12	**.474** 12.04	**.715** 18.16	**1.054** 26.78	**1.414** 35.92	2	158	53429-1	—

* Brazed body

Application Tooling

Long Handle Tool

T-HEAD Tool

Heavy Head Tool

Wire Size Range AWG	Wire Size Range mm²	Hand Tools Style	Hand Tools Part Number	Pneumatic Tools Heads for 626 Single Wire Range	Pneumatic Tools Heads for 626 Multi-Wire Range	Pneumatic Tools Dies for 69710-1[1] 217200-1[2]
26-24 & 22-16	0.1-0.2 & 0.26-1.65	Long Handle T-HEAD Tool T-HEAD Tool	47386 59250 59300	314270-3	679305-1	47806-2*
22-16	0.26-1.65	Long Handle	69151-1**	—	—	—
16-14	1.04-2.62	Long Handle T-HEAD Tool	47387 59250	314269-1	679305-1	47807-1*
12-10	2.62-6.64	Heavy Head	59239-4	679300-1	679305-1	47808-6*

* Maximum tongue width of terminals for use with these dies is .469 [11.91] when used in adapter 217200-1. Flat tongues only.
** For wires with thin wall insulation.
[1] 69710-1 hand tool
[2] 626 Pneumatic Tool Adapter

www.tooling.tycoelectronics.com
www.tooling.tycoelectronics.com/europe

Dimensions are shown for reference purposes only. Specifications subject to change.

Dimensions are in millimeters unless otherwise specified.

USA: +1 800 522 6752
Asia Pacific: +86 0 400 820 6015
UK: +44 800 267 666

For additional support numbers please visit www.te.com

Introduction

Product Facts

- **Designed to provide insulated terminals and splices for large wire sizes, many of which are used in airborne and ground support applications**
- **Tested under the procedures stipulated by MIL Spec. MIL-T-7928, they meet and exceed requirements**
- **Designed and engineered to successfully withstand many vibration, shock and structural stresses, elevated temperatures and other conditions which can adversely affect the circuit requirements in complex air and space flight equipment**
- **The use of matching AMP tooling for precision crimping which makes all terminations identical**
- **This uniformity promotes maximum reliability and, coupled with tool die marks on the barrel indicating the wire size and color coding of the insulation sleeve, also serves as a built-in quality control factor**
- **Pre-insulated with color coded nylon which also acts as insulation support**
- **Wire size range of terminals is 8 AWG through 4/0 AWG**

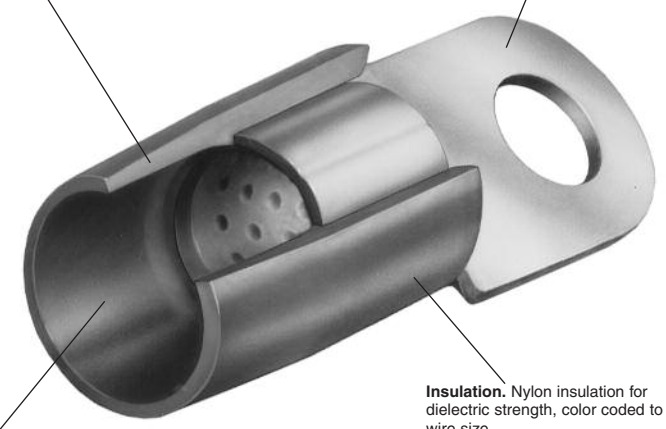

Temperature Rating: 221°F [105°C] Max.

Insulated Terminals and Splices—8 to 4/0 AWG Wire Range

Description	Wire Size	Tools for Loose Piece Terminations		
		Hand Tools	Dies for Crimp Head 1490746-1 & 1976230-1 & Hydraulic Hand Tool 1490749-1	Dies for Crimp Head 1752877-1[1] & 1752787-1[2]
TERMINYL Terminals and Splices	8	—	1490597-1	—
	6	—	1490598-1	—
	4	—	1490599-1	—
	2	—	1490406-1	—
	1/0	—	—	47824
	2/0	—	—	47825
	3/0	—	—	47915
	4/0	—	—	47918
	4 HD	—	—	69463

[1] Heads for Power Units 1804700-1, 1804700-2, 1583659-1 & 1583661-1.
[2] Large expansion dies.

Dimensions are shown for reference purposes only. Specifications subject to change.

Dimensions are in millimeters unless otherwise specified.

USA: +1 800 522 6752
Asia Pacific: +86 0 400 820 6015
UK: +44 800 267 666

For additional support numbers please visit www.te.com

Ring Tongue Terminals

Material and Finish

Insulation — Nylon

Terminal Body — Copper per ASTM B-152

Plating — Tin per ASTM B-545

Related Product Data

Application Tooling — page 10-42

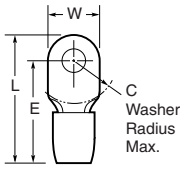

Military Specifications MS25036

Wire Size Circular Mils [mm²]	Tongue Material Thickness Max.	Stud Size	Dimensions W	Dimensions C	Dimensions E Max.	Dimensions L Max.	Terminal Insulation Color	Wire Insulation Diameter Max.	Class	MS25036 Dash Numbers	Part Number Loose Piece
8 13,100-20,800 [6.64-10.5]	.043 1.09	10	.431 10.95	.437 11.10	1.183 30.05	1.402 35.61	Red	.256 6.50	2	115	324043
		1/4 M6	.478 12.14	.437 11.10	1.183 30.05	1.425 36.20	Red	.256 6.50	2	116	324082
		5/16 M8	.587 14.91	.500 12.70	1.246 31.65	1.542 39.17	Red	.256 6.50	2	117	324044
		3/8	.587 14.91	.500 12.70	1.246 31.65	1.542 39.17	Red	.256 6.50	2	118	324045
6 20,800-33,100 [10.5-16.8]	.048 1.22	10	.468 11.89	.421 10.69	1.338 33.99	1.575 40.01	Blue	.314 7.98	2	119	324046
		1/4 M6	.500 12.70	.515 13.08	1.447 36.75	1.700 43.18	Blue	.314 7.98	2	120	324047
		5/16 M8	.625 15.88	.515 13.08	1.447 36.75	1.762 44.75	Blue	.314 7.98	2	121	324048
		3/8	.625 15.88	.515 13.08	1.447 36.75	1.762 44.75	Blue	.314 7.98	2	122	324049
4 33,100-52,600 [16.8-26.7]	.051 1.30	1/4 M6	.546 13.87	.531 13.49	1.536 39.01	1.812 46.02	Yellow	.382 9.70	2	123	324050
		5/16 M8	.679 17.25	.531 13.49	1.536 39.01	1.878 47.70	Yellow	.382 9.70	2	124	324051
		3/8	.679 17.25	.531 13.49	1.536 39.01	1.878 47.70	Yellow	.382 9.70	2	125	324052*
2 52,600-83,700 [26.7-42.4]	.060 1.52	1/4 M6	.679 17.25	.578 14.68	1.705 43.31	2.045 51.94	Red	.468 11.89	2	126	324053
		3/8	.711 18.06	.578 14.68	1.705 43.31	2.063 52.40	Red	.468 11.89	2	127	324054
		1/2 M12	.855 21.72	.578 14.68	1.705 43.31	2.135 54.23	Red	.468 11.89	2	128	324055
1[1] 83,700-119,500 [42.4-60.6]	.073 1.85	1/4 M6	.807 20.50	.625 15.88	2.033 51.64	2.426 61.62	Blue	.580 14.73	2	129	324056
		3/8	.807 20.50	.625 15.88	2.033 51.64	2.426 61.62	Blue	.580 14.73	2	130	324057
		1/2 M12	.875 22.23	.625 15.88	2.017 51.23	2.454 62.33	Blue	.580 14.73	2	131	324058
1/0 83,700-119,500 [42.4-60.6]	.073 1.85	1/4 M6	.807 20.50	.625 15.88	2.033 51.64	2.426 61.62	Blue	.580 14.73	2	132	324113
		3/8	.807 20.50	.625 15.88	2.033 51.64	2.426 61.62	Blue	.580 14.73	2	133	324057
		1/2 M12	.875 22.23	.625 15.88	2.017 51.23	2.454 62.33	Blue	.580 14.73	2	134	324058
2/0 119,500-150,500 [60.6-76.3]	.083 2.11	5/16 M8	.926 23.52	.625 15.88	2.026 51.46	2.416 61.37	Yellow	.610 15.49	2	135	324083
		3/8	.926 23.52	.625 15.88	2.026 51.46	2.416 61.37	Yellow	.610 15.49	2	136	324084
		1/2 M12	.926 23.52	.625 15.88	2.026 51.46	2.416 61.37	Yellow	.610 15.49	2	137	324085
3/0 150,000-190,000 [76.3-96.3]	.094 2.39	3/8	1.082 27.48	.625 15.88	2.294 58.27	2.794 70.97	Red	.680 17.27	2	138	324185
4/0 190,000-231,000 [96.3-117]	.105 2.67	3/8	1.150 29.21	.625 15.88	2.295 58.29	2.858 75.59	Blue	.765 19.43	2	140	324187
		1/2 M12	1.150 29.21	.625 15.88	2.295 58.29	2.858 75.59	Blue	.765 19.43	2	141	324188

* Available in small packaging quantities.

[1] TE Connectivity recommends #1/0 AWG terminals for #1 AWG application.

Dimensions are shown for reference purposes only. Specifications subject to change.

Dimensions are in millimeters unless otherwise specified.

USA: +1 800 522 6752
Asia Pacific: +86 0 400 820 6015
UK: +44 800 267 666

For additional support numbers please visit www.te.com

Table of Contents

Discrete Connectors

Introduction 11-2

Connector Kit Part Numbering System 11-3

Accessories

Introduction 11-4

Product Selection 11-5

Terminator and Connector and Compatibility —
Bayonet and Threaded Connectors 11-6

Triaxial Connectors and Terminator Compatibility —
Bayonet and Threaded Connectors 11-7

Triaxial Connectors and Terminator Compatibility —
to European norme 3716 11-8

Triaxial Size 8 Contacts

Introduction 11-9

Catalog 1308940
Revised 9-14

www.te.com

Dimensions are shown for reference purposes only. Specifications subject to change.

Dimensions are in millimeters unless otherwise specified.

USA: +1 800 522 6752
Asia Pacific: +86 0 400 820 6015
UK: +44 800 267 666

For additional support numbers please visit www.te.com

Discrete Connectors

Product Facts

- Compliance with MIL-STD-1553B hardware requirements
- Light weight
- Removable pin or socket contacts
- Termination with MIL-STD-1553B data bus cables, including EMP-hardened versions
- Continuous 360° shield coverage
- Rugged constructions
- Termination time of 1 to 2 minutes
- Inspectable solder terminations
- Low-skill assembly
- Reworkable and repairable terminations
- Strain relief built into the design
- Low-voltage drop and high reliability because of precisely controlled solder terminations
- Threaded and bayonet coupling styles
- Low total installed cost
- 1000-hour salt spray resistance
- Lower-cost connectors, for benchtop and mock-up

Applications

Designed specifically for MIL-STD-1553B data bus applications, the D-621 connector is intended to be a perfect match for the TE Connectivity airworthy data bus cable. Together they provide durable, reliable, and reworkable interconnection hardware for the MIL-STD-1553B market.

Specifications/Approvals

Series	Military	TE
DK-621	MIL-STD-1553B	D-6025

Catalog 1308940
Revised 9-14

www.te.com

Dimensions are shown for reference purposes only. Specifications subject to change.

Dimensions are in millimeters unless otherwise specified.

USA: +1 800 522 6752
Asia Pacific: +86 0 400 820 6015
UK: +44 800 267 666

For additional support numbers please visit www.te.com

Discrete Connectors (Continued)

Connector Kit Part Numbering System

DK-621-04 XX-XX

Contact (supplied in DK-621 kits only)
P = Pin
S = Socket

Polarization (bayonet styles only) (jack view)

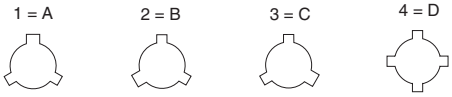

Basic Connector Configurations
Threaded styles
11 = Plug
12 = Jack
Bayonet styles
33 = Plug, A polarization
34 = Jack, A polarization
35 = Plug, B polarization
36 = Jack, B polarization
37 = Plug, C polarization
38 = Jack, C polarization
39 = Plug, D polarization
40 = Jack, D polarization

D-621 connector, kitted with accessories

Example:

DK-621-0434-1P = D-621 connector, kitted with accessories, jack bayonet style with A polarization and pin contact.

Accessories

Product Facts

- **A single source for all harness components**
- **Products designed to work together**

Applications

TE Connectivity manufactures all the products needed to build a MIL-STD-1553B data bus network. In addition to the main components (couplers, connectors, contacts, and cables), TE supplies the accessory components that may be necessary to complete a data bus system.

These include:

- Bus and stub terminators (spliced-in and connectorized D-621 series).
- Cable splice kits.
- EMI/environment-resistant connector caps.
- Braid terminators and strain relief tubing (for rework applications).
- Cable marking materials.

Dimensions are shown for reference purposes only. Specifications subject to change.

Dimensions are in millimeters unless otherwise specified.

USA: +1 800 522 6752
Asia Pacific: +86 0 400 820 6015
UK: +44 800 267 666

For additional support numbers please visit www.te.com

Accessories (Continued)

Product Selection

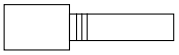

D-621 Plug

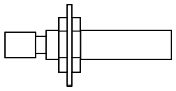

D-621 Jack

Splice-in

Bus and Stub Terminators

Spliced-in	12-inch Cable
77-ohm 10612 cable	D-500-0463-612
77-ohm 10613 cable	D-500-0463-613
77-ohm 10614 cable	D-500-0463-614

D-621 Series—Plug	Threaded	Bayonet A	Bayonet B	Bayonet C	Bayonet D
77-ohm pin contact	D-621-0413	D-621-0453	D-621-0454	D-621-0455	D-621-0456
77-ohm socket contact	D-621-0415	D-621-0469	D-621-0470	D-621-0471	D-621-0472
3000-ohm pin contact	D-621-0417	D-621-0457	D-621-0458	D-621-0459	D-621-0476
3000-ohm socket contact	D-621-0407	D-621-0473	D-621-0474	D-621-0475	D-621-0460
D-621 Series—Jack	**Threaded**	**Bayonet A**	**Bayonet B**	**Bayonet C**	**Bayonet D**
77-ohm pin contact	D-621-0418	D-621-0477	D-621-0478	D-621-0479	D-621-0480
77-ohm socket contact	D-621-0406	D-621-0461	D-621-0462	D-621-0463	D-621-0464
3000-ohm pin contact	D-621-0423	D-621-0481	D-621-0482	D-621-0483	D-621-0484
3000-ohm socket contact	D-621-0424	D-621-0465	D-621-0466	D-621-0467	D-621-0468
D-621 Series—L	**Lanyard 7”**	**—**	**—**	**—**	**—**

Connector Caps

D-621 Series	Threaded	Bayonet A	Bayonet B	Bayonet C	Bayonet D
Plug cap for jack connector Supplied with 7” Lanyard	D-600-0083	D-600-0068	D-600-0068	D-600-0068	D-600-0065

Cable Splice Kits

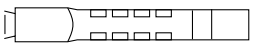

Cables	Flexible Crimp
All data bus cables	D-150-0708-5

Catalog 1308940
Revised 9-14

www.te.com

Dimensions are shown for reference purposes only. Specifications subject to change.

Dimensions are in millimeters unless otherwise specified.

USA: +1 800 522 6752
Asia Pacific: +86 0 400 820 6015
UK: +44 800 267 666

For additional support numbers please visit www.te.com

Accessories (Continued)

Terminator and Connector and Compatibility — Bayonet and Threaded Connectors

Panel Thickness	Connector	Contact	Terminator Reference	Mate with	
				Standard Connector	Long Reach Connector
Bayonet Connectors					
Polarity A					
77 Ohm bus terminator	Plug	Pin	D-621-0453(-L)	DK-621-0434-1S	DK-621-0550-1S
	Plug	Socket	D-621-0469(-L)	DK-621-0434-1P	DK-621-0550-1P
	Jack	Pin	D-621-0477(-L)	DK-621-0433-1S	—
	Jack	Socket	D-621-0461(-L)	DK-621-0433-1P	—
3K Ohm stub terminator	Plug	Pin	D-621-0457(-L)	DK-621-0434-1S	DK-621-0550-1S
	Plug	Socket	D-621-0473(-L)	DK-621-0434-1P	DK-621-0550-1P
	Jack	Pin	D-621-0481(-L)	DK-621-0433-1S	—
	Jack	Socket	D-621-0465(-L)	DK-621-0433-1P	—
Polarity B					
77 Ohm bus terminator	Plug	Pin	D-621-0454-(-L)	DK-621-0436-2S	DK-621-0548-2S
	Plug	Socket	D-621-0470-(-L)	DK-621-0436-2P	DK-621-0548-2P
	Jack	Pin	D-621-0478-(-L)	DK-621-0435-2S	—
	Jack	Socket	D-621-0462-(-L)	DK-621-0435-2P	—
3K Ohm stub terminator	Plug	Pin	D-621-0458-(-L)	DK-621-0436-2S	DK-621-0548-2S
	Plug	Socket	D-621-0474-(-L)	DK-621-0436-2P	DK-621-0548-2P
	Jack	Pin	D-621-0482-(-L)	DK-621-0435-2S	—
	Jack	Socket	D-621-0466-(-L)	DK-621-0435-2P	—
Polarity C					
77 Ohm bus terminator	Plug	Pin	D-621-0455(-L)	DK-621-0438-3S	DK-621-0546-3S
	Plug	Socket	D-621-0471(-L)	DK-621-0438-3P	DK-621-0546-3P
	Jack	Pin	D-621-0479(-L)	DK-621-0437-3S	—
	Jack	Socket	D-621-0463(-L)	DK-621-0437-3P	—
3K Ohm stub terminator	Plug	Pin	D-621-0459(-L)	DK-621-0438-3S	DK-621-0546-3S
	Plug	Socket	D-621-0475(-L)	DK-621-0438-3P	DK-621-0546-3P
	Jack	Pin	D-621-0483(-L)	DK-621-0437-3S	—
	Jack	Socket	D-621-0467(-L)	DK-621-0437-3P	—
Polarity D					
77 Ohm bus terminator	Plug	Pin	D-621-0456(-L)	DK-621-0440-4S	DK-621-0551-4S
	Plug	Socket	D-621-0472(-L)	DK-621-0440-4P	DK-621-0551-4P
	Jack	Pin	D-621-0480(-L)	DK-621-0439-4S	—
	Jack	Socket	D-621-0464(-L)	DK-621-0439-4P	—
3K Ohm stub terminator	Plug	Pin	D-621-0460(-L)	DK-621-0440-4S	DK-621-0551-4S
	Plug	Socket	D-621-0476(-L)	DK-621-0440-4P	DK-621-0551-4P
	Jack	Pin	D-621-0468(-L)	DK-621-0439-4S	—
	Jack	Socket	D-621-0484(-L)	DK-621-0439-4P	—
Threaded Connectors					
77 Ohm bus terminator	Plug	Pin	D-621-0413(-L)	DK-621-0412-S	DK-621-0512-S
	Plug	Socket	D-621-0415(-L)	DK-621-0412-P	DK-621-0512-P
	Jack	Pin	D-621-0418(-L)	DK-621-0411-S	—
	Jack	Socket	D-621-0406(-L)	DK-621-0411-P	—
3K Ohm stub terminator	Plug	Pin	D-621-0417(-L)	DK-621-0412-S	DK-621-0512-S
	Plug	Socket	D-621-0407(-L)	DK-621-0412-P	DK-621-0512-P
	Jack	Pin	D-621-0423(-L)	DK-621-0411-S	—
	Jack	Socket	D-621-0424(-L)	DK-621-0411-P	—

Dimensions are shown for reference purposes only. Specifications subject to change.

Dimensions are in millimeters unless otherwise specified.

USA: +1 800 522 6752
Asia Pacific: +86 0 400 820 6015
UK: +44 800 267 666

For additional support numbers please visit www.te.com

Accessories (Continued)

Triaxial Connectors and Terminator Compatibility — Bayonet and Threaded Connectors

Panel Thickness	Connector	Contact	Connector Reference	Mate with		
				Connector	77 Ohm Bus Terminator	3K Ohm Stub Terminator
Bayonet Connectors						
Polarity A						
	Plug	Pin	DK-621-0433-1P	DK-621-0434-1S	D-621-0461(-L)	D-621-0465 (-L)
	Plug	Socket	DK-621-0433-1S	DK-621-0434-1P	D-621-0477(-L)	D-621-0481(-L)
Standard	Jack	Pin	DK-621-0434-1P	DK-621-0433-1S	D-621-0461(-L)	D-621-0473(-L)
2.4mm max.	Jack	Socket	DK-621-0434-1S	DK-621-0433-1P	D-621-0453(-L)	D-621-0457(-L)
Long Reach	Jack	Pin	DK-621-0550-1P	DK-621-0433-1S	D-621-0469(-L)	D-621-0473(-L)
12.5mm max.	Jack	Socket	DK-621-0550-1S	DK-621-0433-1P	D-621-0453(-L)	D-621-0457(-L)
Polarity B						
	Plug	Pin	DK-621-0435-2P	DK-621-0436-2S	D-621-0462(-L)	D-621-0474 (-L)
	Plug	Socket	DK-621-0435-2S	DK-621-0436-2P	D-621-0478(-L)	D-621-0458(-L)
Standard	Jack	Pin	DK-621-0436-2P	DK-621-0435-2S	D-621-0470(-L)	D-621-0474(-L)
2.4mm max.	Jack	Socket	DK-621-0436-2S	DK-621-0435-2P	D-621-0454(-L)	D-621-0458(-L)
Long Reach	Jack	Pin	DK-621-0448-2P	DK-621-0435-2S	D-621-0470(-L)	D-621-0467(-L)
12.5mm max.	Jack	Socket	DK-621-0448-2S	DK-621-0435-2P	D-621-0454(-L)	D-621-0483(-L)
Polarity C						
	Plug	Pin	DK-621-0437-3P	DK-621-0438-3S	D-621-0463(-L)	D-621-0467(-L)
	Plug	Socket	DK-621-0437-3S	DK-621-0438-3P	D-621-0479(-L)	D-621-0483(-L)
Standard	Jack	Pin	DK-621-0438-3P	DK-621-0437-3S	D-621-0471(-L)	D-621-0475(-L)
2.4mm max.	Jack	Socket	DK-621-0438-3S	DK-621-0437-3P	D-621-0455(-L)	D-621-0459(-L)
Long Reach	Jack	Pin	DK-621-0446-3P	DK-621-0437-3S	D-621-0471(-L)	D-621-0475(-L)
12.5mm max.	Jack	Socket	DK-621-0446-3S	DK-621-0437-3P	D-621-0455(-L)	D-621-0459(-L)
Polarity D						
	Plug	Pin	DK-621-0439-4P	DK-621-0440-4S	D-621-0464(-L)	D-621-0468(-L)
	Plug	Socket	DK-621-0439-4S	DK-621-0440-4P	D-621-0480(-L)	D-621-0484(-L)
Standard	Jack	Pin	DK-621-0440-4P	DK-621-0439-4S	D-621-0472(-L)	D-621-0476(-L)
2.4mm max.	Jack	Socket	DK-621-0440-4S	DK-621-0439-4P	D-621-0456(-L)	D-621-0460(-L)
Long Reach	Jack	Pin	DK-621-0551-4P	DK-621-0439-4S	D-621-0472(-L)	D-621-0476(-L)
12.5mm max.	Jack	Socket	DK-621-0551-4S	DK-621-0439-4P	D-621-0456(-L)	D-621-0460(-L)
Threaded Connectors						
	Plug	Pin	DK-621-0411-P	DK-621-0412-S	D-621-0406(-L)	D-621-0424(-L)
	Plug	Socket	DK-621-0411-S	DK-621-0412-P	D-621-0418(-L)	D-621-0423(-L)
Standard	Jack	Pin	DK-621-0412-P	DK-621-0411-S	D-621-0415(-L)	D-621-0407(-L)
2.4mm max.	Jack	Socket	DK-621-0412-S	DK-621-0411-P	D-621-0413(-L)	D-621-0417(-L)
Long Reach	Jack	Pin	DK-621-0412-P	DK-621-0411-S	D-621-0415(-L)	D-621-0407(-L)
12.5mm max.	Jack	Socket	DK-621-0412-S	DK-621-0411-P	D-621-0413(-L)	D-621-0417(-L)

Accessories (Continued)

Triaxial Connectors and Terminator Compatibility — to European norme 3716

Panel Thickness	Connector	Contact	Connector Reference	Mate with		
				Connector	77 Ohm Bus Terminator	3K Ohm Stub Terminator
Triaxial Connectors						
	Plug	Pin	DK-3716-F101-TP	DK-621-E102-TS	D-621-E077-S	D-621-E03K-S
	Plug	Socket	DK-3716-F101-TS	DK-621-E102-TP	D-621-E077-P	D-621-E03K-P
	Plug	Pin	DK-3716-F201-TP	DK-621-E202-TS	D-621-E077-S	D-621-E03K-S
	Plug	Socket	DK-3716-F201-TS	DK-621-E202-TP	D-621-E077-P	D-621-E03K-P
Standard 2.4mm max.	Jack	Pin	DK-3716-E102-TP	DK-621-F101-TS	D-621-F077-S	D-621-F03K-S
	Jack	Socket	DK-3716-E102-TS	DK-621-F101-TP	D-621-F077-P	D-621-F03K-P
	Jack	Pin	DK-3716-E202-TP	DK-621-F201-TS	D-621-F077-S	D-621-F03K-S
	Jack	Socket	DK-3716-E202-TS	DK-621-F201-TP	D-621-F077-P	D-621-F03K-P
Long Reach 12.5mm max.	Jack	Pin	DK-3716-E112-TP	DK-621-F101-TS	D-621-F077-S	D-621-F03K-S
	Jack	Socket	DK-3716-E112-TS	DK-621-F101-TP	D-621-F077-P	D-621-F03K-P
	Jack	Pin	DK-3716-E212-TP	DK-621-F201-TS	D-621-F077-S	D-621-F03K-S
	Jack	Socket	DK-3716-E212-TS	DK-621-F201-TP	D-621-F077-P	D-621-F03K-P

Panel Thickness	Connector	Contact	Terminator Reference	Mate with	
				Standard Connector	Long Reach Connector
Terminators					
77 Ohm bus terminator	Plug	Pin	DK-3716-F077-P	DK-3716-E#02-TS	DK-3716-E#12K-TS
	Plug	Socket	DK-3716-F077-S	DK-3716-E#02-TP	DK-3716-E#12K-TP
	Jack	Pin	DK-3716-F077-P	DK-3716-E#01-TS	—
	Jack	Socket	DK-3716-F077-S	DK-3716-E#01-TP	—
3K Ohm stub terminator	Plug	Pin	DK-3716-E03K-P	DK-3716-E#02-TS	DK-3716-E#12K-TS
	Plug	Socket	DK-3716-E03K-S	DK-3716-E#02-TP	DK-3716-E#12K-TP
	Jack	Pin	DK-3716-E03K-P	DK-3716-E#01-TS	—
	Jack	Socket	DK-3716-E03K-S	DK-3716-E#01-TP	—

Triaxial Size 8 Contacts

Product Facts

- One-step termination
- Termination time of 1 to 2 minutes
- No requirements for special termination tools
- No requirements for special skills
- Reworkable and repairable terminations
- Strain relief
- Continuous 360° shield coverage
- Triaxial mating face for least susceptibility to damage
- Rugged construction, because only two parts are being soldered together
- Inspectable solder terminations
- Low voltage drop and high reliability due to precisely controlled solder termination

Applications

Contacts provide full shield coverage with a simple, quick, and reliable termination system. 24 AWG twisted-pair data bus cables are terminated with triaxial SolderTacts contacts, which fit size 8 cavities of MIL-C-38999, Series 1, 3, or 4 connectors.

brand size 8 triaxial data bus contacts for MIL-C-38999 connectors have interfaces that comply with MIL-C-39029/90 and /91 to provide ease of termination, and intermateability with more cumbersome crimp contacts.

These contacts provide a fast and convenient method of implementing MIL-STD-1553B connections in MIL-STD-1760 applications.

Specifications/Approvals

Series	TE
Size 8	D-6002

Product Selection

Cable Type	Pin	Socket
10612	DK-602-0156-N-1	DK-602-0157-N-1
10613	DK-602-0156-N-2	DK-602-0157-N-2
10614	DK-602-0156-N-3	DK-602-0157-N-3

Catalog 1308940
Revised 9-14

www.te.com

Dimensions are shown for reference purposes only. Specifications subject to change.

Dimensions are in millimeters unless otherwise specified.

USA: +1 800 522 6752
Asia Pacific: +86 0 400 820 6015
UK: +44 800 267 666

For additional support numbers please visit www.te.com

Engineering Notes

Catalog 1308940
Revised 9-14

www.te.com

Dimensions are shown for reference purposes only. Specifications subject to change.

Dimensions are in millimeters unless otherwise specified.

USA: +1 800 522 6752
Asia Pacific: +86 0 400 820 6015
UK: +44 800 267 666

For additional support numbers please visit www.te.com

Table of Contents

Equivalents and Conversions 12-2, 12-3
Temperature Conversion Formula 12-4, 12-5

Catalog 1308940
Revised 9-14

www.te.com

Dimensions are shown for reference purposes only. Specifications subject to change.

Dimensions are in millimeters unless otherwise specified.

USA: +1 800 522 6752
Asia Pacific: +86 0 400 820 6015
UK: +44 800 267 666

For additional support numbers please visit www.te.com

Equivalents and Conversions

Decimal Equivalents

Fraction of Inch	Decimal of Inch	Decimal Millimeters	Fraction of Inch	Decimal of Inch	Decimal Millimeters
1/64	.0156	0.3969		.5118	13.0000
1/32	.0313	0.7938	33/64	.5156	13.0969
	.0394	1.0000	17/32	.5313	13.4938
3/64	.0469	1.1906	35/64	.5469	13.8906
1/16	.0625	1.5875		.5512	14.0000
5/64	.0781	1.9844	9/16	.5625	14.2875
	.0787	2.0000	37/64	.5781	14.6844
3/32	.0938	2.3813		.5906	15.0000
7/64	.1094	2.7781	19/32	.5938	15.0813
	.1181	3.0000	39/64	.6094	15.4781
1/8	.1250	3.1750	5/8	.6250	15.8750
9/64	.1406	3.5719		.6299	16.0000
5/32	.1563	3.9688	41/64	.6406	16.2719
	.1575	4.0000	21/32	.6563	16.6688
11/64	.1719	4.3656		.6693	17.0000
3/16	.1875	4.7625	43/64	.6719	17.0656
	.1969	5.0000	11/16	.6875	17.4625
13/64	.2031	5.1594	45/64	.7031	17.8594
7/32	.2188	5.5563		.7087	18.0000
15/64	.2344	5.9531	23/32	.7188	18.2563
	.2362	6.0000	47/64	.7344	18.6531
1/4	.2500	6.3500		.7480	19.0000
17/64	.2656	6.7469	3/4	.7500	19.0500
	.2756	7.0000	49/64	.7656	19.4469
9/32	.2813	7.1438	25/32	.7813	19.8438
19/64	.2969	7.5406		.7874	20.0000
5/16	.3125	7.9375	51/64	.7969	20.2406
	.3150	8.0000	13/16	.8125	20.6375
21/64	.3281	8.3344		.8268	21.0000
11/32	.3438	8.7313	53/64	.8281	21.0344
	.3543	9.0000	27/32	.8438	21.4313
23/64	.3594	9.1281	55/64	.8594	21.8281
3/8	.3750	9.5250		.8661	22.0000
25/64	.3906	9.9219	7/8	.8750	22.2250
	.3937	10.0000	57/64	.8906	22.6219
13/32	.4063	10.3188		.9055	23.0000
27/64	.4219	10.7156	29.32	.9063	23.0188
	.4331	11.0000	59/64	.9219	23.4156
7/16	.4375	11.1125	15/16	.9375	23.8125
29/64	.4531	11.5094		.9449	24.0000
15/32	.4688	11.9063	61/64	.9531	24.2094
	.4724	12.0000	31/32	.9688	24.6063
31/64	.4844	12.3031		.9843	25.0000
1/2	.5000	12.7000	63/64	.9844	25.0031
			1	1.0000	25.4000

Equivalents and Conversions (Continued)

Conversion Factors

Length	Area	Volume	Mass
Inches x 25.40 = Millimeters	Sq. inches x 6.452 = Sq. centimeters	Cu. inches x 16.39 = Cu. centimeters	Ounces x 28.35 = Grams
Millimeters x 0.03937 = Inches	Sq. centimeters x 0.1550 = Sq. inches	Cu. cm. x 0.06102 = Cu. inches	Grams x 0.03527 = Ounces
Feet x 0.3048 = Meters	Sq. feet x 0.0929 = Sq. meters	Cu. feet x 0.02832 = Cu. meters	Pounds x 0.4536 = Kilograms
Meters x 3.281 = Feet	Sq. meters x 10.76 = Sq. feet	Cu. meters x 35.31 = Cu. feet	Kilograms x 2.205 = Pounds
Miles x 1.609 = Kilometers	Sq. miles x 2.59 = Sq. kilometers		Kilograms/km x 0.6214 = Pounds/kft
Kilometers x 0.6214 = Miles	Sq. kilometers x 0.3861 = Sq. miles		Pounds/kft x 1.4881 = Kilograms/km
Ohms/km x 0.3048 = Ohms/kft	Circular mils x 0.7854 = Sq. mil		

Prefixes (SI), Values, and Symbols

Prefix	Value	Symbol	Prefix	Value	Symbol
Tera	1012	T	Deci	10-1	d
Giga	109	G	Centi	10-2	c
Mega	106	M	Milli	10-3	m
Kilo	103	k	Micro	10-6	µ
Hecto	102	h	Nano	10-9	n
Deca	101	da	Pico	10-12	p

Catalog 1308940
Revised 9-14

www.te.com

Dimensions are shown for reference purposes only. Specifications subject to change.

Dimensions are in millimeters unless otherwise specified.

USA: +1 800 522 6752
Asia Pacific: +86 0 400 820 6015
UK: +44 800 267 666

For additional support numbers please visit www.te.com

Temperature Conversion Formula

°C = (°F -32) ÷ 1.8
°F = (°C x 1.8) + 32

°F	°C	°F	°C	°F	°C	°F	°C
-103	-75.00	-30	-34.44	25	-3.89	65	18.33
-101.2	-74.00	-28	-33.33	26	-3.33	66	18.89
-99.4	-73.00	-26	-32.22	27	-2.78	67	19.44
-97.6	-72.00	-24	-31.11	28	-2.22	68	20.00
-95.8	-71.00	-22	-30.00	29	-1.67	69	20.56
-94.0	-70.00	-20	-28.89	30	-1.11	70	21.11
-92.2	-69.00	-18	-27.78	31	-0.56	71	21.67
-90.4	-68.00	-16	-26.67	32	0.00	72	22.22
-88.6	-67.00	-14	25.56	33	0.56	73	22.78
-86.8	-66.00	-12	-24.44	34	1.11	74	23.33
-85.0	-65.00	-10	-23.33	35	1.67	75	23.89
-83.2	-64.00	-8	-22.22	36	2.22	77	25.00
-81.4	-63.00	-6	-21.11	37	2.78	77	25.00
-79.6	-62.00	-4	-20.00	38	3.33	78	25.56
-77.8	-61.00	-2	-18.89	39	3.89	79	26.11
-76.0	-60.00	0	-17.78	40	4.44	80	26.67
-74.2	-59.00	1	-17.22	41	5.00	81	27.72
-72.4	-58.00	2	-16.67	42	5.56	82	27.78
-70.6	-57.00	3	-16.11	43	6.11	83	28.33
-68.8	-56.00	4	-15.56	44	6.67	84	28.89
-67.0	-55.00	5	-15.00	45	7.22	85	29.44
-65.2	-54.00	6	-14.44	46	7.78	86	30.00
-63.4	-53.00	7	-13.89	47	8.33	87	30.56
-61.6	-52.00	8	-13.33	48	8.89	88	31.11
-59.8	-51.00	9	-12.78	49	9.44	89	31.67
-58.0	-50.00	10	-12.22	50	10.00	90	32.22
-56.2	-49.00	11	-11.67	51	10.56	91	32.78
-54.4	-48.00	12	-11.11	52	11.11	92	33.33
-52.6	-47.00	13	-10.56	53	11.67	93	33.89
-50.8	-46.00	14	-10.00	54	12.22	94	34.44
-49.0	-45.00	15	-0.44	55	12.78	95	35.00
-47.2	-44.00	16	-8.89	56	13.33	96	35.56
-45.4	-43.00	17	-8.33	57	13.89	97	36.11
-43.6	-42.00	18	-7.78	58	14.44	98	36.67
-41.8	-41.00	19	-7.22	59	15.00	99	37.22
-40	-40.00	22	-6.11	60	15.56	100	37.78
-38	-38.89	21	-6.11	61	16.11	101	38.33
-36	-37.78	22	-5.56	62	16.67	102	38.88
-34	-36.67	23	-5.00	63	17.22	103	39.44
-32	-35.56	24	-4.44	64	17.78	104	40.00

Catalog 1308940
Revised 9-14

www.te.com

Dimensions are shown for reference purposes only. Specifications subject to change.

Dimensions are in millimeters unless otherwise specified.

USA: +1 800 522 6752
Asia Pacific: +86 0 400 820 6015
UK: +44 800 267 666

For additional support numbers please visit www.te.com

Temperature Conversion Formula (Continued)

°C = (°F -32) ÷ 1.8
°F = (°C x 1.8) + 32
(Continued)

°F	°C	°F	°C	°F	°C	°F	°C
105	40.55	145	62.78	185	85.00	325	162.78
106	41.11	146	63.33	186	85.55	330	165.56
107	41.66	147	63.88	187	86.11	335	168.33
108	42.22	148	64.44	189	87.22	340	171.11
109	42.77	149	65.00	189	87.22	345	173.89
110	43.33	150	65.56	190	87.78	350	176.67
111	43.88	151	66.11	191	88.33	355	179.44
112	44.44	152	66.66	192	88.88	360	182.22
113	45.00	153	67.22	193	89.44	365	185.00
114	45.55	154	67.77	194	90.00	370	187.78
115	46.11	155	68.33	195	90.55	375	190.55
116	46.66	156	68.88	196	91.11	380	193.33
117	47.22	157	69.44	197	91.66	385	196.11
118	47.77	158	70.00	198	92.22	390	198.89
119	48.33	159	70.55	199	92.77	395	201.67
120	48.89	160	71.11	200	93.33	400	204.44
121	49.44	161	71.66	205	96.11	405	207.22
122	50.00	162	72.22	210	98.89	410	210.00
123	50.55	163	72.77	215	101.67	415	212.78
124	51.11	164	73.33	220	104.44	425	215.56
125	51.67	165	73.89	225	107.22	425	218.33
126	52.22	166	74.44	230	110.00	430	221.11
127	52.77	167	75.00	235	112.78	435	223.89
128	53.33	168	75.55	240	115.56	440	226.67
129	53.88	169	76.11	245	118.33	445	229.44
130	54.44	170	76.67	250	121.11	450	232.22
131	55.00	171	77.22	255	123.89	455	235.00
133	56.11	172	77.77	260	126.67	460	237.78
133	56.11	173	78.33	265	129.44	465	240.55
134	56.66	174	78.88	270	132.22	470	243.33
135	57.22	175	79.44	275	135.00	475	246.11
136	57.77	176	80.00	280	137.78	480	248.89
137	58.33	177	80.55	285	140.55	485	251.67
138	58.88	178	81.11	290	143.33	490	254.44
139	59.44	179	88.66	295	146.11	495	257.22
140	60.00	180	82.22	300	148.89		
141	60.55	181	82.77	305	151.67		
142	61.11	182	83.33	310	154.44		
143	61.66	183	83.88	315	157.22		
144	62.22	184	84.44	320	160.00		

Catalog 1308940
Revised 9-14

www.te.com

Dimensions are shown for reference purposes only. Specifications subject to change.

Dimensions are in millimeters unless otherwise specified.

USA: +1 800 522 6752
Asia Pacific: +86 0 400 820 6015
UK: +44 800 267 666

For additional support numbers please visit www.te.com

Engineering Notes

Catalog 1308940
Revised 9-14

www.te.com

Dimensions are shown for reference purposes only. Specifications subject to change.

Dimensions are in millimeters unless otherwise specified.

USA: +1 800 522 6752
Asia Pacific: +86 0 400 820 6015
UK: +44 800 267 666

For additional support numbers please visit www.te.com

Glossary of Terms

A

abrasion-resistance A measure of the ability of a wire or wire covering to resist damage by mechanical means.

accelerated aging A test in which voltage, temperature, or other test parameters are increased above normal operating values to obtain observable deterioration in a relatively short time. The plotted results give service life within the context of the test.

adapter A device usually attached to the rear of connectors that provides for the attachment of harnessing components, such as strain-relief clamps, heat-shrinkable boots, and braid.

adhesive (hot melt) Dual-wall tubing and precoated molded parts whose inner layer melts and flows when heated, fills voids in the areas being covered, and forms a mechanical bond to the substrate. Unlike an encapsulant, an adhesive forms a mechanical bond to the substrate.

adhesive liner Lining that melts and flows inside a sleeve or molded part, filling any voids in between the substrate and the sleeve or molded part. DuraSeal has an adhesive liner.

aging Change in the properties of a material over time and under specific conditions. Generally refers to environmental stimulus such as heat and light.

altitude immersion seal A seal able to withstand substantial pressure change (for example, from sea level to 75,000 feet).

amnesia The tendency over time for a heat-shrinkable elastomeric tubing or molded part to fail to recover completely to its specified recovered size. See shelf life.

ampacity See current-carrying capacity.

amplitude The magnitude of variation in a changing quantity from its zero value. The word requires modification — as with adjectives such as peak, maximum, rms, etc. — to designate the specific amplitude in question.

arc voltage voltage that continues to pass through a surge protector during activation of GDT(approx. 20 volts)

ASTM (American Society for Testing and Materials) A nonprofit industry-wide organization that formulates test methods and material specifications, and publishes standards, testing methods, recommended practices, definitions, and other materials.

attenuation A reduction in power. It occurs naturally during wave travel through lines, waveguides, space or a medium such as water. It may be produced intentionally by placing an attenuator in a circuit. The amount of attenuation is generally expressed in decibels per unit of length.

AWG (American Wire Gauge) The recognized method (in the United States) of specifying conductor size. The higher the gauge number, the smaller the conductor size.

B

back mounted A connector attached to the inside of a panel or box with its mounting flanges inside the equipment.

band marking A continuous circumferential band applied to a wire at regular intervals for identification.

bare conductor A conductor not covered with insulating material.

barrel 1.) Connector barrel: The section of the terminal, splice, or contact that accommodates the stripped conductor. 2.) Insulation barrel: The section of the terminal, splice, or contact that accommodates the conductor insulation. 3.) Open barrel: The section of a cap that accommodates the conductor.

batch number See lot number.

bayonet coupling A quick-coupling device for plug and receptacle connectors. Mating is accomplished by rotation of the two parts under pressure.

beaming Crosslinking by means of high-energy electrons.

bellmouth Flared at the mouth. The rear of a properly crimped wire barrel will have a slight flare (bellmouth) to relieve the strain on the wire strands as they leave the area of high compression and take their natural “lay”. A bellmouth condition may also be present in front of the wire barrel.

binder A spiral wrapping of a thread to hold together the members of a cable.

blocking The sticking together of insulated wires; usually caused by heat.

BNC connector A radio frequency connector covered by Military Specification. It has an impedance of 50 or 75 ohms, and is designed to operate in the 0 to 4 GHz frequency range. It features quick connect/disconnect by pin and cam bayonet coupling.

body Main or largest portion of a connector to which other portions are attached.

bonding temperature Temperature above which adhesive melts and flows sufficiently to form an adhesive bond between substrates.

braid A weave of metal fibers used as a shield covering for an insulated conductor or group of insulated conductors. When flattened it may be used as a grounding strap.

braid angle The angle between the braid strands and the axis of the cable.

breakdown voltage The voltage at which an insulator or dielectric fails to maintain the applied voltage.

breakout A region in a harness assembly where a wire or a group of wires is detached to form a separate, terminated branch. Also known as a transition.

brittle temperature The temperature below which a material becomes brittle, often measured by a cold impact test.

broad-band E Interference generated over a wide range of frequencies (e.g., automotive ignition noise).

bulkhead A term used to define a mounting style of connectors. Bulkhead connectors are designed to be inserted into a panel cutout from the rear (component side) of the panel.

bunch stranding A method of twisting individual strands to form a finished stranded conductor. Specifically, a number of strands twisted together in a common direction and with a uniform pitch (or twist) per inch.

bus A communal circuit over which data or power is transmitted.

C

cable Two or more wires in a twisted or parallel configuration. Also, a shielded wire.

cable clamp A mechanical clamp attached to the cable side of a termination assembly to support the cable or wire bundle. It provides strain relief and absorbs vibration and shock that would otherwise be transmitted by the cable terminations.

cable clamp adapter A mechanical adapter that attaches to the rear of a termination assembly to allow the attachment of a cable clamp.

cable sealing clamp A device consisting of a gland nut designed to seal around the jacket of a cable.

cabler A machine that mechanically assembles a group of insulated wires.

cabling The act of twisting together two or more insulated components to form a cable.

capacitance The property of an electrical conductor (dielectric in a capacitor) that permits the storage of energy as a result of electrical displacement. The basic unit of capacitance is the farad, however, measurement is more commonly in microfarads or picofarads.

carrier A group of strands or ends used to form a finished braid.

cavity A metallic enclosure in some types of tubes and circuits within which resonant fields may be excited at the microwave frequency to which the cavity is tuned. Usually referred to as resonant cavity. See also: contact cavity.

Catalog 1308940
Revised 9-14

www.te.com

Dimensions are shown for reference purposes only. Specifications subject to change.

Dimensions are in millimeters unless otherwise specified.

USA: +1 800 522 6752
Asia Pacific: +86 0 400 820 6015
UK: +44 800 267 666

For additional support numbers please visit www.te.com

Glossary of Terms (Continued)

characteristic impedance The ratio of voltage to current at any point along a transmission line on which there are no standing waves.

chemical resistance The ability of an insulation to withstand the presence of materials—such as acids, bases, water, salt water, and fuels—that can deteriorate the insulation, or that, if penetrable to the conductor, can cause dielectric loss of insulating qualities.

Cheminax cables Raychem's registered trade name for coaxial cables.

circuit The interconnection of a number of electrical elements or parts to accomplish a desired function.

circular mil area (CMA) A unit of area equal to the area of a circle whose diameter is 1 mil (0.001 inch). Used chiefly in specifying cross-sectional areas of conductors. (See AMP Brochure No. 4402-8, Computing Circular Mil Area for AMP Terminals and Splices).

clocking The arrangement of connector inserts, jackscrews, polarizing pins, sockets, keys/keyways, or housing configurations to prevent the mismating or cross-mating of connectors. See also polarization.

closed entry contact A female contact designed to prevent the entry of a pin or probing device having a cross-sectional dimension (diameter) greater than the mating pin.

coax See coaxial cable.

coaxial cable A transmission line consisting of two conductors concentric with and insulated from each other. In its flexible form it consists of either a solid or stranded center conductor surrounded by a dielectric. A braid is then woven over the dielectric to form an outer conductor. A weatherproof plastic covering, usually vinyl, is placed on top of the braid.

cold bend A test conducted by wrapping tubing or cable around a mandrel or by bending it in an arc while at a low temperature.

cold flow Permanent deformation of polymeric materials (insulation) at ambient temperature due to mechanical force or pressure (not due to heat softening).

cold impact A test performed by subjecting a component to a specified impact during exposure to low temperature. It measures the brittleness of the material.

cold joint A soldered joint made with insufficient heat. (Solder hasn't completely flowed and wet the substrate.)

color code A means of identifying cable components using solid colors or stripes. Also, the scheme that assigns a number from 0 to 9 for each of 10 colors.

color stability The time and temperature ranges within which the color of a material will remain within the specified color limit.

component A wire or cable that is combined with other wires or cables to make a multicomponent cable.

compound An insulating or jacketing material made by formulating polymeric materials and additives.

Compound Under Strands (CUS) A problem that occurs when loose stranding, or overheating during extrusion, allows compounds to get under individual strands of conductor.

concentric stranding A method of stranding conductor. Specifically, the final conductor is built up in layers so that the inner diameter of a succeeding layer is always equal to the outer diameter of the underlying layer.

concentricity Ratio (expressed as a percentage) of the thinnest to the heaviest wall thickness. Measured on expanded or recovered tubing, or wire insulation, or jacketing.

conductivity The capability of a material to carry electrical current, usually expressed as a percentage of copper conductivity (copper being 100%). Specifically, the ratio of the current flow to the potential difference causing the flow. The reciprocal of resistance.

conductor The metallic strand or strands used to carry an electric current.

conductor resistance The resistance to flow of the electrical current along a conductor. Expressed in ohms/1000 feet. (Usually referenced to 20°C).

conduit A tubular raceway for holding wires or cables.

configuration Arrangement of contacts in a multiple-contact connector.

connector A device used to physically and electrically connect two or more conductors.

connector classes Categories based on shape, function, and smallest-size contact in a series.

connector insert In connectors with metal shells, the part that holds contacts in proper arrangement while electrically insulating them from each other and from the shell.

contact The element in a connector that makes the actual electrical connection. Also the parts of a connector that actually carry the electrical current, and are touched together or separated to control the flow.

contact crimp A contact whose rear portion is a hollow cylinder that accepts the conductor. A crimping tool is applied to swage or form the contact metal firmly against the conductor. Sometimes referred to as a solderless contact.

contact durability The number of insertion and withdrawal cycles that a connector must be capable of withstanding while remaining within the performance levels of the applicable specification.

contact engaging and separating force Force required to either engage or separate contacts. Values are generally established for maximum and minimum forces.

contact inspection hole A hole, perpendicular to the cylindrical rear portion of screw machined contacts, used to check the depth to which wire has been inserted into the barrel.

contact resistance Measurement of electrical resistance of mated contacts when assembled in a connector under typical service use. Electrical resistance is determined by measuring from the rear of the electrical area of one contact to the rear of the contact area of the mating contact (excluding both crimps) while carrying a specified test current.

contact size The diameter of the engagement end of a pin contact; also related to the current-carrying capacity of a contact.

contact, two-piece A contact made of two separate parts joined by swedging, brazing or other means of fastening to form a single contact. While this provides the mechanical advantages of two metals, it also has the inherent electrical disadvantage of difference in conductivity.

continuity A continuous path for the flow of current in an electrical circuit.

continuous operating temperature Maximum temperature at which a component will maintain an acceptable lifetime performance, based on accelerated aging prediction.

continuous service Conditions (time, temperature, environment) that describe the lifetime requirements of a component.

core 1.) In cables, a component or assembly of components over which additional components, such as a shield or a sheath, are applied.
2.) Inner wall of dual-wall heat-shrinkable tubing.

corona A discharge of electricity appearing as a bluish-purple glow on the surface of, and adjacent to, a conductor when the voltage gradient exceeds a certain critical value. It is caused by the ionization of surrounding air by high voltage.

coupling ring The portion of a plug that aids in the mating and demating of a plug and receptacle and holds the plug to the receptacle.

cover, electrical connector An item specifically designed to cover the mating end of a connector for mechanical and/or environmental protection. Also known as a dust cover.

coverage A calculated percentage that defines the completeness with which a braid or shield covers the surface of the underlying insulated conductor or conductors.

Glossary of Terms (Continued)

crimp The final configuration of a terminal barrel after the necessary compression forces have been applied to cause a functional union between the terminal barrel and the wire.

crimp height A top to bottom measurement of the crimped barrel, using a crimp height comparator in the prescribed manner. (Refer to AMP Instruction Sheet 7424).

crimping dies A term used to identify the shaping tools that, when moved toward each other, produce a certain desirable shape to the barrel of the terminal or contact that has been placed between them. Crimping dies are often referred to as die sets or as die inserts.

crimping head Tooling containing jaws and linkage for use in pneumatic or hydraulic powered units to crimp loose-piece contacts/terminals that may be too large for hand tool applications.

crimping tool A term commonly used to identify a hand held mechanical device that is used to crimp a contact, terminal or splice.

crosslinking The formation of bonds between molecular chains in a polymer by means of chemical catalyzation or electron bombardment. The properties of the resulting thermosetting material are usually improved.

crosslinking by irradiation A method of crosslinking polymers that makes a nonflowing material. This generally improves the properties of the polymer.

crosstalk A magnetic or electrostatic coupling which causes the unwanted transfer of energy from one circuit (disturbing circuit) to another circuit (disturbed circuit)

crystallinity The portion of polymer chains that are ordered in a regular (as opposed to amorphous) structure or a crystal lattice. Crystallinity tends to improve mechanical properties and fluid resistance. Crystalline or semi-crystalline materials have a well-defined melting point (shrink temperature) at which the structure becomes disordered and the polymer flows.

CSA (Canadian Standards Association) An agency that has developed standard specifications for products with particular emphasis on safety in the end use.

curing See thermoset.

current A movement or flow of electrons. Also, the measure of this flow, expressed in amperes.

current-carrying capacity The maximum current an insulated conductor is capable of carrying without exceeding its insulation- and /or jacket-temperature limitations under specified ambient conditions. Also known as ampacity.

current rating The maximum continuous electrical flow of current recommended for a given situation. It is expressed in amperes.

cutout The hole, usually round or rectangular, cut into a metal panel in order to mount a connector. The cutout may also include holes for mounting screws or bolts.

cut-through resistance Resistance of solid material to penetration by an object (typically a closely controlled knife edge) under conditions of pressure, temperature, and other elements.

cycle One complete sequence of values of an alternating quantity, including a rise to maximum in one direction and return to zero; a rise to maximum in the opposite direction and return to zero. The number of cycles occurring in one second is called the frequency.

D

dB Abbreviation — see decibel.

D.C. sparkover voltage defined as the maximum voltage across a device before it discharges the energy to ground when subjected to a slowly rising voltage ramp. A rate of rise of 100V/s is usually chosen for testing purposes.

decibel A unit expressing the ratio of two voltages, currents or powers. It is equal to 20 times the common logarithm of the ratio of two voltages across or two currents through equal loads, or 10 times the common logarithm of the two powers. One decibel is approximately the smallest change in audible power that can be recognized by the human ear.

die closure Term used to designate a crimping area (crimping chamber) when the dies are fully closed or bottomed. Die closure is checked with go/no go plug gage to insure that the crimp produced by the tooling satisfies the crimp height specification.

dielectric A material that serves as an insulator. The amount of resistance to voltage in a given insulation.

dielectric breakdown The voltage required to cause an electrical failure or breakthrough of the insulation. Determined by a destructive test. See also breakdown voltage.

dielectric constant (also K) The ratio of the capacitance between two electrodes with a solid, liquid, or gaseous dielectric, to the capacitance with air between the electrodes. Also called permittivity and specific inductive capacity. Generally low values are desirable for insulation.

dielectric strength The maximum voltage a dielectric can withstand without rupture. Usually expressed as volts per mil.

dielectric withstanding voltage The maximum potential gradient that a dielectric material can withstand without failure.

Direct Current Resistance (DCR) The resistance offered by any circuit to the flow of direct current.

direction of lay The lateral direction in which the strands or elements of a cable run over the top of the cable as they recede from the observer. Expressed as right-hand or left-hand lay.

discontinuity Rated interconnection: a broken connection (open circuit) or the loss of a specified connection characteristic. Transient phenomena: Short term (temporary) interruption or unacceptable variation in current or voltage.

dissipation Unusable or lost energy, such as the production of unused heat in a circuit.

dissipation factor The ratio between the permittivity and the conductivity of a dielectric.

distortion An unwanted change or addition to a signal or waveform when it is amplified. This definition excludes noise which is an extraneous signal superimposed on the desired signal.

drain wire In a cable, an uninsulated conductor laid over the component, or components, in a foil-shield cable. Used as a ground connection.

dummy load A dissipative device used at the end of a transmission line or waveguide to convert transmitted energy into heat, so essentially no energy is radiated outward or reflected back to its source.

dust cover See cover, electrical connector.

E

EID See Expanded ID.

elastic memory The ability of a crosslinked polymer to be deformed to some predetermined shape, hold that shape for a period, and then return to its original shape upon the application of heat.

elastomer A material that exhibits very low or zero crystallinity and a high degree of flexibility (rubber is a synonym).

electromagnetic compatibility (EMC) The ability of an electronic device to operate in its intended environment without its performance being affected by EMI and without generating EMI that will affect other equipment.

electromagnetic interference (EMI) Unwanted electrical or electromagnetic energy that causes undesirable responses, degrading performance or complete malfunctions in electronic equipment. See also: noise.

Glossary of Terms (Continued)

electromotive force (emf) See voltage.

elongation The ultimate elongation, or elongation at rupture. Expressed as a percentage of original length.

EMI Abbreviation for electromagnetic interference.

encapsulant Description related to the way dual-wall tubing products and precoated molded parts melt and flow when heated, filling any void in the area being covered. Unlike an adhesive, an encapsulant does not form a mechanical bond to the substrate.

encapsulation Covering and sealing.

end The number of fibers or strands per carrier in braiding operations.

environmentally sealed A unit is provided with gaskets, seals, grommets, potting or other means to keep out moisture, dust, air or dirt which might reduce or impair its performance.

epoxy A family of thermosetting resins usually used as adhesives or encapsulants.

ETFE (Ethylenetetrafluoroethylene) A fluoropolymer used as base resin for SPEC 55 wire and HCTE.

Expanded ID (EID) The specified minimum (as supplied) internal diameter of tubing.

expansion ratio An expression of how much larger the inside diameter of a tubing is before shrinking. Specifically, the relationship of the minimum (expanded) inside diameter of tubing to the maximum (recovered) inside diameter, expressed as a ratio. See also shrink ratio.

extraction tool A tool used for removing contacts from a connector body.

extrusion A process that conveys plastic insulation material, generally via a screw, through forming dies and subsequently cools the insulation material to form a predetermined shape.

F

feedthrough A connector or terminal block, usually having double-ended terminals, which permits distribution and bussing of electrical circuits. Also used to describe a bushing in a wall or bulkhead, separating compartments at different pressure levels, with terminations on both sides.

ferrule A short tube used to make solderless connections to shielded or coaxial cable. Also molded into the plastic inserts of multiple contact connectors to provide strong, wear-resistant shoulders on which contact retaining springs can bear.

filler A material used in a cable construction to fill large interstices, thus providing a round construction; can be shaped, round, or in mastic forms. A nonfunctional member used in a cable to provide a more circular cross section.

flame-resistant A descriptor applied to a material that is inherently resistant to burning.

flame retardant A descriptor applied to a material that has been made or treated so as to resist burning.

flat braid A braided shield composed of flat strands.

flat cable A cable with each component in a single, flat plane.

flat conductor A conductor having a rectangular cross section, as opposed to a round or square cross section.

flex life A measure of the susceptibility of a conductor or other device to failure due to fatigue from repeated bending.

fluoropolymer A polymer that contains atoms of fluorine.

flux A liquid or solid that, when heated, exercises a cleaning and protective action upon surfaces. Used to promote or facilitate fusion during soldering or welding.

frequency modulation (fm) A scheme for modulating a carrier frequency in which the amplitude remains constant but the carrier frequency is displaced in frequency proportionally to the amplitude of the modulating signal. An fm broadcast is practically immune to atmospheric and man-made interference.

fretting corrosion A form of excellerated oxidation that appears at the interface of contacting materials undergoing slight cyclic relative motion. All non-nobel metals (tin) are susceptible to some degree of fretting corrosion and will suffer contact resistance increases.

front mounted A connector is said to be front mounted when it is attached to the outside of the mating side of a panel. A front mounted connector can only be installed or removed from the outside of the equipment.

front release contacts Connector contacts that are released from the front side of the connector and then removed from the back, wire side of the connector.

full recovery temperature, minimum See recovery temperature.

G

gauge A term used to denote the physical size of a wire. See also AWG.

giga A prefix meaning one billion (10^9).

gigahertz (GHz) One billion cycles per second (10^9 cps).

ground A connection, intentional or accidental, between an electrical circuit and the earth or some conducting body (e.g. chassis) serving in place of earth.

grounding conductor A conductor that provides a current return path from an electrical device to ground.

H

hardness A general term that correlates with strength, rigidity, and resistance to abrasion or penetration. Measured on Shore or Rockwell scales. See also shore.

harness A system providing electrical connection between two or more points.

heat aging A test that subjects components or materials to temperatures above normal operating values to evaluate changes in performance in order to predict service life. See also accelerated aging.

heat shock A test to determine the stability of a material by continuously exposing it to an extremely high temperature for a short period of time. The test was developed both to demonstrate that the material is crosslinked and to observe any problems in dripping, cracking, or flowing.

heat-shrinkable A type of plastic material that has been cross-linked. A term describing tubes, sleeves, caps, boots, films or other forms of plastic which shrink to encapsulate, protect or insulate connections, splices, terminations and other configurations.

hermetic Airtight, impervious to external influence, as in a hermetic package. Often used to describe metal-to-metal solder or weld-sealed packages.

hermetic seal Hermetically sealed connectors are usually multiple contact connectors where the contacts are bonded to the connector by glass or other materials and permits maximum leakage rate of gas through the connector of 1.0 micron ft./hr. at one atmosphere pressure for special applications.

hertz (Hz) International standard term for cycles per second. Named after the German physicist Heinrich R. Hertz (e.g., 60 cycles per second is equal to 60 hertz or 60 Hz).

hookup wire and cable Wiring used to connect various points in electronic assemblies.

Glossary of Terms (Continued)

hot-melt adhesive An adhesive that becomes activated by heating. When heated, it melts, flows over the substrate surface, and forms an adhesive bond. Reheating causes the adhesive to remelt.

I

ID (Internal Diameter) The inside or internal diameter of a tubing.

impedance (Z) The total opposition offered by a component or circuit to the flow of alternating or varying current. Impedance is expressed in ohms and is similar to the actual resistance in a direct current circuit. In computations, impedance is handled as a complex ratio of voltage to current.

impedance match A condition in which the impedance of a component or circuit is equal to the internal impedance of the source, or the surge impedance of a transmission line. This gives maximum transfer of energy from the source to the load, as well as minimum reflection and distortion.

impulse discharge current is defined as the peak current of an impulse which the device can withstand ten times (5 of each polarity at fixed time intervals) without substantially affecting device performance. The test normally used to determine this capacity uses the 8/20ms waveform as depicted at right where T1=8ms and T2=20ms.

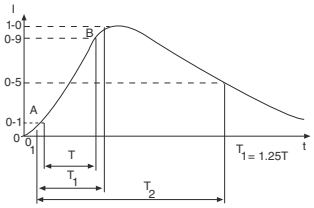

impulse sparkover voltage defined as the maximum level of voltage across a device before it discharges the energy to ground when subjected to a voltage impulse. The three common waveform profiles used to determine this capacity are:

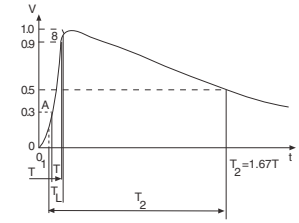

impulse test A high-voltage test designed to locate pinholes in the insulation of a wire or cable by applying a voltage while the wire or cable is being drawn through an electrode.

inductance One cause of reactance. An electromagnetic phenomenon in which the expanding and collapsing of a magnetic field surrounding a conductor or device tends to impede changes in current. The effects of inductance become greater as frequencies increase. The basic unit for inductance is the henry.

input impedance The impedance that exists between the input terminals of an amplifier or transmission line when the source is disconnected. The circuit, signal level and frequency must be specified.

insert Meltable thermoplastic ring placed within a SolderSleeve device. Aids in encapsulation and sealing.

insert (connector) Part that holds the contacts in their proper arrangement and electrically insulates them from each other and from the shell.

insert arrangement (connector) The number, spacing, and arrangement of contacts in a termination assembly.

insert cavity (connector) A defined hole in the connector insert into which the contacts are inserted.

insertion loss The loss in load power due to the insertion of a component, connector or device at some point in a transmission system. Generally expressed in decibels as the ratio of the power received at the load before insertion of the apparatus, to the power received at the load after insertion.

insertion tool (connector) A tool used to insert removable contacts into a connector.

inspection hole A hole placed at one end of a contact barrel to permit visual inspection, to ensure that the conductor has been inserted to the proper depth in the barrel prior to crimping or soldering.

insulated terminal A solderless terminal with an insulated sleeve over the barrel to prevent a short circuit in certain installations.

insulation crimp The area of a terminal splice or contact that has been formed around the insulation of a wire.

insulation, electrical A nonconductive material usually surrounding or separating two conductive materials. Often called the dielectric in cables designed for high-frequency use.

insulation grip The ability of certain crimped terminals to hold firmly in place both the conductor and a small portion of insulation. This prevents the conductor from being exposed due to insulation receding away from the terminal.

insulation resistance The electrical resistance between two conductors separated by an insulating material.

insulation, thermal A nonconductive material that prevents the passage of heat.

interconnection The joining of one individual device with another.

interface The two surfaces of a multiple-contact connector that face each other when the connector is assembled.

interference An electrical or electromagnetic disturbance that causes undesirable response in electronic equipment.

interstice In a cable construction, the space or void left between or around the cabled components.

irradiation In insulations, the exposure of the material to high-energy emissions for the purpose of favorably altering the molecular structure via crosslinking.

J

jack A connecting device into which a plug can be inserted to make circuit connections. The jack may also have contacts which open or close to perform switching functions when the plug is inserted or removed. See also: receptacle.

jacket 1.) A material covering over a wire or cable assembly. 2.) Outer covering of a dual-wall heat-shrinkable tubing.

jackscrew A screw attached to one half of a two-piece, multiple-contact connector and used to draw both halves together and to separate them.

K

Kapton DuPont's trade name for polyimide film.

key (connector) A short pin or other projection that slides into a mating slot or groove to guide two parts being assembled.

keying (connector) Mechanical arrangement of guide pins and sockets, keying plugs, contacts, bosses, slots, keyways, inserts, or grooves in a connector housing, shell or insert that allows connectors of the same size and type to be lined up; used in situations where there is danger of making a wrong connection.

keyway The slot or groove in which a key slides.

kV (kilovolt) A unit equal to 1000 volts.

Kynar Trade name (of Elf Atochem North America) for polyvinylidene fluoride and its copolymers.

Catalog 1308940
Revised 9-14
www.te.com

Dimensions are shown for reference purposes only. Specifications subject to change.
Dimensions are in millimeters unless otherwise specified.
USA: +1 800 522 6752
Asia Pacific: +86 0 400 820 6015
UK: +44 800 267 666
For additional support numbers please visit www.te.com

Glossary of Terms (Continued)

L

lacing cord or twine Used for lacing and tying cable forms, hookup wires, cable ends, cable bundles, and wire harness assemblies. Available in various materials and impregnants.

lanyard A device, attached to certain quick-disconnect connectors, that permits uncoupling and separation of connector halves by a pull on a wire or cable.

lay Refers to direction or sometimes the ratio of lay length to core diameter.

lay length A term used in cable manufacturing to denote the distance of advance of one member, or a group of spirally twisted members in one turn, measured axially. The lay of any helical element of a cable or conductor is the axial length of a turn of the helix of that element.

life cycle A test to determine the length of time before failure in a controlled, usually accelerated environment.

line impedance Impedance as measured across the terminals of a transmission line; frequently the characteristic impedance of the line.

liner See core.

longitudinal change (shrink tubing) The change in length of tubing when recovered. Expressed in the percent of change from the original length.

loss Electrical energy that is dissipated as heat.

loss factor The product of the power factor and dielectric constant of an insulating material.

lot number The number that identifies one production run of material. Also known as a batch number.

low-loss dielectric An insulating material that has a relatively low dielectric loss, such as polyethylene or PTFE.

lug A termination, usually crimped or soldered to a conductor, that allows connection to be made with a retaining screw.

M

marking A printed identification number or symbol applied to the surface of a wire or cable.

matched impedance The coupling of two circuits in such a way that the impedance of one circuit equals the impedance of the other.

mate To join two connectors in a normal engaging mode.

maximum discharge current defined as the peak current of an impulse which the device can withstand once without substantially affecting device performance.

mega (M) A prefix meaning one million (10^6).

megarad A unit for measuring radiation dosage.

melt/flow index Measurement of the flow of thermoplastic material under given conditions of temperature and pressure. Expressed as grams per unit of time.

melting point The temperature at which crystallinity disappears when crystalline material is heated.

MIL A unit equal to one one-thousandth of an inch (.001"); used in measuring the diameter of a conductor or thickness of insulation over a conductor.

Military Specification Military requirements. The demand imposed upon a system to meet a military operational need.

MIL-SPEC Abbreviation for Military Specification, which is a document the U.S. Government issues to define a product that will be used in military end-use applications.

milking off Action that occurs when the inner layer (the encapsulant or adhesive) of the tubing or molded part acts as a lubricant, allowing the tubing to slip off the substrate (because the tubing wants to recover to a smaller diameter).

minimum full recovery temperature See recovery temperature.

mismatch The condition in which the impedance of a source does not match or equal the impedance of the connected load. This reduces power transfer by causing reflection.

MO (Manufacturing Order) A series of operation-work-order cards identifying materials to be used and the type and quantity of products to be manufactured. An MO is controlled and issued by Production Control to the manufacturing operation.

MOD Code (Material Modification Code) A code designating a particular stage in the production process. Most MOD codes describe the way the product is packaged.

MS (Manufacturing Specification) A set of process instructions used in the manufacturing of tubing products. Customer Logistics, Product Management, or Manufacturing Engineering initiate the MS; Manufacturing Engineering controls it. The product design and quality parameters are provided to Manufacturing Engineering by Product Development and Quality Assurance. Successful trial runs of a new product or design usually precede the initiation of an MS (see SMO). A proprietary Raychem document, an MS is not available to customers.

multiconductor More than one component within a single-cable complex.

multiple-conductor cable A combination of two or more components cabled together.

N

narrow-band EMI generated from a device operating at a specific and limited range of frequencies. See also: electromagnetic interference (EMI).

N Connector A large radio frequency connector covered by Military Specification. It has an impedance of 50 ohms and is designed to operate in the 0 to 11 GHz frequency range. It has a threaded coupling and is physically larger than a TNC connector.

nick A small cut or notch in conductor strands or insulation.

noise An extraneous signal in an electrical circuit, capable of interfering with the desired signal. Classes of noise include burst of popcorn noise, intermediate frequency noise at low audio frequencies, white (thermal) noise, etc. Signals from power supply or ground line coupled into an amplifier output may be considered noise.

nominal A descriptor applied to a dimension representing the center of the range of tolerance or a value if no tolerance is applied.

O

"O" crimp An insulation support crimp for open barrel terminals and contacts. In its crimped form it resembles an "O" and conforms to the shape of the round wire insulation. "O" crimp is also used to describe the circumferential crimps used on COAXICON ferrules.

OFT (Optional Flame Test) Canadian Standards Association's test for flame-retardance. Tubing with an OFT rating is highly flame-retardant.

ohm The unit of measurement for electrical resistance. A circuit is said to have a resistance of one ohm when an applied emf of one volt causes a current of one ampere to flow.

operating temperature The maximum internal temperature at which a system, harness, or connector may operate in continuous service; generally expressed as a time and temperature.

operating temperature range The range between the maximum and the minimum internal temperature of insulation in a system, harness, or connector in continuous service. The lower limit is determined by low-temperature flex test.

Optional Flame Test See OFT.

Catalog 1308940
Revised 9-14

www.te.com

Dimensions are shown for reference purposes only. Specifications subject to change.

Dimensions are in millimeters unless otherwise specified.

USA: +1 800 522 6752
Asia Pacific: +86 0 400 820 6015
UK: +44 800 267 666

For additional support numbers please visit www.te.com

Glossary of Terms (Continued)

P

packaging The process of physically locating, connecting, and protecting devices or components.

panel The side or front (usually metal) of a piece of equipment on which connectors are mounted.

panel mount A method of fixing a connector to a board, panel or frame. The mounted connector is usually the receptacle or female connector. The plug or male connector is usually the removable portion.

PC (Production Control) Group responsible for directing and regulating the movement of goods through the entire manufacturing cycle, from the requisitioning of raw materials to the delivery of the finished products.

PCN See RPN.

peripheral seal A seal provided around the periphery of connector inserts to prevent the ingress of fluids or contaminants at the perimeter of mated connectors.

permeability (chemical) The passage or diffusion (or rate of passage) of a gas, vapor, liquid or solid through a barrier without physically or chemically affecting it.

permeability (magnetic) The measure of how much better a material is than air as a path for magnetic lines of force. Air is assumed to have a permeability of 1.

permittivity See dielectric constant.

pick The number of crossovers of braiding units per inch of cable.

pigtail A short conductor or wire extending from an electrical or electronic device to serve as a jumper or ground connection.

pin contact An electrical terminal, usually in a connector. Normally a smaller termination than a lug.

plastic deformation Change in dimensions under a load that does not recover when the load is removed.

plasticizer A softener or lubricant added to a compound to make it easier to process or more flexible in use.

plating The overlaying of a thin coating of metal on metallic components to improve conductivity, facilitate soldering, or prevent corrosion.

plug The part of a connector that is normally "removable" from the other, permanently mounted part; usually that half of a two-piece connector that contains the pin contacts.

plug connector An electrical connector that is intended to be attached to the free end of a conductor, wire, cable, or bundle, and that couples or mates to a receptacle connector.

poke through A term describing stray wires in a solder joint that poke through the insulation.

polarization (connectors) A mechanical arrangement of inserts or the shell configuration (referred to as clocking in some instances) that prohibits the mating of mismatched plugs and receptacles. See also clocking.

polyamide A polymer formed by the reaction of a diamine and a diacid. Nylons are commercial polyamides characterized by toughness, solvent resistance, and sharp melting point.

polymer A material of high molecular weight formed by the chemical union of monomers.

polyolefin A family of polymers (such as polyethylene and polypropylene) made from olefin monomers.

potting The permanent sealing of the cable end of a connector with a compound or material that thermosets into an elastomer, to exclude moisture and/or to provide strain relief.

pre-etching The act of surface preparation before encapsulating.

pretinned Description of an electrical component to which solder has been applied prior to soldering.

pretinned solder cup Solder cup whose inner surfaces have been precoated with a small amount of solder.

preform Usually, the solder ring in a SolderSleeve device.

primary insulation The inner member of a dual-wall wire insulation. The insulation applied directly on the conductor. Also referred to as the core. See also core.

printed circuit board (pcb) An insulating board serving as a base for a printed circuit. When the printing process is completed, the board may include printed components, as well as printed wiring.

propagation delay Time required for an electronic digital device, or transmission network to transfer information from its input to its output.

propagation delay time The time between the application of a digital input waveform and the corresponding change in input waveform. It is measured between reference points on the waveforms. The time is generally different for positive-going and negative-going waveforms.

pulse A change in the level, over a relatively short period of time, of a signal whose value is normally constant.

pulse width The length of time that the pulse voltage is at the transient level. Electronic pulse widths are usually in the millisecond (10^{-3}), microsecond (10^{-6}) or nanosecond (10^{-9}) range.

push-back That property of a braid or shield that allows the braid or shield to be pushed back easily along the cable core.

PVC (Polyvinyl chloride) A polymer compound used as wire insulation.

PVDF Polyvinylidene fluoride.

Q

quality assurance Systematic, planned, and documented activities designed to provide confidence that a product will meet specifications.

quality control Activities that monitor, measure, and control the characteristics of a material, component, or product to documented specifications.

quick disconnect A type of connector shell that permits rapid locking and unlocking of two connector halves.

R

RA flux Rosin-activated flux.

radiation crosslinking The act of crosslinking a material with ionizing radiation. (Most Raychem products are radiation crosslinked, with an electron beam as the form of ionizing radiation.) See also crosslinking by irradiation.

rated temperature The maximum temperature at which a component can operate for extended periods with acceptable changes in its basic properties.

rated voltage The maximum voltage at which an electric component can operate for extended periods without undue degradation.

rear release contacts Connector contacts designed to be released and removed from the rear (wire side) of the connector. The removal tool engages the contact from the rear and pulls the contact out of the connector contact retainer.

receptacle Usually the fixed or stationary half of a two-piece multiple contact connector. Also the connector half usually mounted on a panel and containing socket contacts.

recover (heat-shrinkable components) Activation of the elastic memory principle (usually with heat) to cause a tubing or molded part to return to its original size.

Recovered ID (RID) In heat-shrink tubing, the guaranteed maximum internal diameter of tubing after being freely recovered.

Catalog 1308940
Revised 9-14

www.te.com

Dimensions are shown for reference purposes only. Specifications subject to change.

Dimensions are in millimeters unless otherwise specified.

USA: +1 800 522 6752
Asia Pacific: +86 0 400 820 6015
UK: +44 800 267 666

For additional support numbers please visit www.te.com

Glossary of Terms (Continued)

recovery temperature The minimum temperature required to fully shrink a product, that is, for the product to recover completely.

removable contact A contact that can be mechanically joined to or removed from an insert. Usually special tools are required to lock the contact in place or remove it for repair or replacement.

residual impulse defined as the voltage that will pass through the device prior to activation of the GDT.

residual voltage defined as the small amount of voltage left on the line after an impulse passes.

resistance A measure of the difficulty in moving electrical current through a conductor or insulation when a voltage is applied. It is measured in ohms.

resonance A frequency at which captive reactance and inductive reactance are equal and therefore cancel one another's effects.

RF Abbreviation for radio frequency.

RG/U Symbol used to designate coaxial cables that are made to Government Specification (e.g., RG-58U; in this designation the "R" means radio frequency, the "G" means Government, the "58" is the number assigned to the government approval, and the "U" means it is a universal specification).

ribbon cable Flat cable with conductors that have been individually insulated together. Its structure is usually characterized by individual colors of insulation for each conductor, although a single color may be used for all conductors.

RID See Recovered ID.

rise time The time required for a component or logic circuit to change from the quiescent to the transient state when an input is applied. (i.e. elapsed time between application of input and attainment of full output level).

RMA flux Rosin-mildly-activated flux.

root mean square (rms) The effective value of an alternating current, corresponding to the direct current value that will produce the same heating effect.

rope lay A type of conductor lay that uses stranded conductors as components to build a larger conductor.

RPN (Raychem Product Number) A 10-digit number (such as 123456-4-001) assigned to every standard product and every product manufactured on a special manufacturing order (SMO). The first 6 digits represent the PCN (Product Control Number), followed by a 1-digit MOD Code, and finally a 3-digit suffix. See also MOD Code and SMO.

RT and RW specifications Specification that describes standard product properties. Qualification and acceptance inspection criteria are incorporated into RT and RW specifications. RT and RW specifications are issued and controlled by the Specifications Group.

S

SCD (Specification Control Drawing) Drawing that defines configuration and material parameters. Issued and controlled by the specifications group, SCDs are frequently used in conjunction with RT Specifications for Thermofit products.

scoop-proof A feature that prevents the damage of contacts during misaligned mating.

sealant Soft, tacky, pliable material that seals where mechanical strength is not required.

sealed Environmentally protected by the thermoplastic inserts or core of encapsulant/ adhesive that has melted down around the substrate.

sealing plug A plug that is inserted to fill an unoccupied contact aperture in a termination assembly.

secant modulus A measure of material stiffness; stiffer material has a higher secant modulus. More specifically, the secant modulus is the ratio of stress (nominal) to corresponding strain at any specified point on the stress-strain curve.It is expressed in force per unit area (usually kilograms per square centimeters or pounds per square inch), and reported together with the specified stress or strain.

semi-rigid A cable containing a flexible inner core and a relatively inflexible sheathing.

service life Period of time during which the product is expected to perform satisfactorily.

service loop The extra cable required at a breakout to facilitate maintenance and servicing.

service rating The maximum voltage or current that a termination is designed to carry continuously.

sheath The outer covering of a jacket over the insulated conductors to provide mechanical protection for the conductors. Also known as the external conduction surface of a shielded transmission line.

shelf life Generally, the length of time a product or material may be stored without deterioration. Specifically, the length of time during which shrink tubing will retain its expanded ID and return to its recovered ID. Usually not a concern—except for some "amnesic" materials. See amnesia.

shell (connector) The outside case, usually metallic, into which the insert (body) and contacts are assembled. Shells of mating connector halves usually provide for proper alignment and polarization as well as for protection of projecting contacts.

shield/shielding (cable) A conducting envelope, composed of metal strands, which enclose a wire, group of wires or cable so constructed that substantially every point on the surface of the underlying insulation is at ground potential or at some predetermined potential with respect to ground.

shield/shielding (circuit) The metal sleeving surrounding one or more of the conductors in a wire circuit to prevent interference, interaction or current leakage. Shielding protects a circuit against crosstalk.

Shielding Effectiveness (SE) The reduction in field strength resulting from interposing a metallic barrier between a source and receptor of electromagnetic energy.

shock (mechanical) (1) An abrupt impact applied to a stationary object. (2) An abrupt or nonperiodic change in position, characterized by suddenness, and by the development of substantial internal forces.

shore A scale for comparing hardness. Higher Shore values represent harder materials. The hardness of a polymer, for example, is usually represented as Shore A or Shore D, with D being harder.

shrink ratio An expression of how much the inside diameter of shrink tubing will reduce in size when recovered. The inverse of the expansion ratio. See also expansion ratio.

shrink temperature, minimum The minimum temperature at which a product begins to recover.

SHV Abbreviation for standard high voltage.

signal cable A cable designed to carry current of less than 12 amperes per conductor.

sine wave A wave which can be expressed as the sine of a linear function of time, space or both. A waveform, often viewed on an oscilloscope, of a pure alternating current or voltage.

skew Any out-of-squareness of the cut end of a piece of tubing after shrinking.

skin effect The tendency of alternating currents to flow near the surface of the conductor, thus being restricted to a small part of the total cross-sectional area. This effect increases the resistance and becomes more marked as the frequency rises.

Glossary of Terms (Continued)

sleeve The insulated or metallic covering over the barrel of a terminal.

SMO (Special Manufacturing Order) An order to evaluate manufacturing and production capability for a new or changed design for a customer and to provide development samples of potential products for customers. SMO products are separate and distinct from standard products. New, potential products are usually run as SMO products for a minimum of three times before being considered for manufacture as a standard product.

solder An alloy that melts at relatively low temperatures and is used to join metals with higher melt points.

solder contact A contact or terminal having a cup, hollow cylinder, eyelet or hook to accept a wire for a conventional soldered termination.

solder cup A tubular end of a terminal into which a wire conductor is inserted prior to being soldered.

solderability The property of a metal surface that allows it to be readily wetted by molten solder. See also wetting.

soldering A process of joining metallic surfaces with solder without melting the base metal.

SolderSleeve device A device of flux-coated solder preform encapsulated in a heat-recoverable plastic sleeve. Upon the application of heat, the flux and solder will melt and flow as the sleeve recovers, forcing the solder around and onto the metallic parts being joined, thus forming an electrically insulated and strain-relieved joint.

solid conductor A conductor composed of one single strand.

solvent resistance The ability of a material to retain physical and electrical properties after being immersed in specific solvents.

SPC Silver-plated copper.

SPC (Statistical Process Control) The use of statistical techniques such as control charts to analyze a process or its output so as to take appropriate actions to achieve and maintain a state of control and to improve the capability of the process.

specific gravity The ratio of the density (mass per unit volume) of a material to that of water.

specific inductive capacity See dielectric constant.

splice A joint connecting conductors with good mechanical strength and conductivity; a terminal that permanently joins two or more wires.

standard high voltage (SHV) A quick connect/disconnect connector series employing a bayonet lock coupling and designated to operate safely up to 5000 volts AC. It is the industry standard connector specified by the National Bureau of Standards (NBS) for high voltage use by the Atomic Energy Commission (AEC).

standing-wave Distribution of current and voltage on a transmission line, resulting from two sets of waves traveling in opposite directions.

standing wave ratio The ratio between maximum and minimum current or voltage along a line. It is a measure of the mismatch between the load and the line. It is equal to 1 when the line impedance is perfectly matched to the load. (In which case the maximum and minimum are the same, as current and voltage do not vary along the line). The perfect match would be a 1 to 1 ratio.

strain relief The technique for or act of removing or lessening the strain or stress on a joint, splice, or termination. SolderSleeve devices provide strain relief.

strain relief clamp See cable clamp.

strand A single unit of a conductor.

stranded conductor A conductor composed of more than one single strand. The strands in stranded conductors are usually twisted or braided together.

strip To remove insulation from a wire or cable.

stripe A continuous longitudinal or spiral color strip applied on the surface of a wire, cable, or tubing for identification.

substrate The material—such as a wire, post, or tab—over which an interconnection device is used.

super high frequency (shf) The Federal Communications Commission designation for the band from 3,000 to 30,000 MHz in the radio spectrum.

surface resistance The ratio of the direct current applied to an insulation system to the current that passes across the surface of the system.

T

tape wrap A term denoting a spirally or longitudinally applied tape material wrapped around insulated or uninsulated wire and used as a mechanical barrier.

TC Tinned copper.

tear test A test to determine the tear strength of an insulating material. Usually includes exposure to given thermal conditions or a programmed series of conditions for prescribed periods of time.

temperature rating The maximum temperature at which the insulating material may be used in continuous operation without loss of its basic properties. Usually time dependent.

tensile The amount of axial load (longitudinal stress) required to break or pull the wire from the crimped barrel of the terminal, splice or contact.

tensile strength The greatest longitudinal stress that a substance or union can bear without tearing or pulling apart. In crimped terminations, it is the greatest longitudinal stress that a terminal can bear without the wire separating from the terminal.

thermal rating The effect of heat or cold applied at such a rate that nonuniform thermal expansion or contraction occurs within a given material or combination of materials. In electrical terminations, the effect can cause inserts and other insulation material to pull away from the metal parts.

thermal shock The effect of heat or cold applied at such a rate that nonuniform thermal expansion or contraction occurs within a given material or combination materials. The effect can cause inserts and other insulation materials to pull away from metal parts.

thermochromic indicator Special compound that changes color when the proper wetting temperature has been reached in the solder joint.

thermoplastic A material that softens (melts and flows) when heated and becomes firm when cooled. A type of plastic that can be remelted a number of times without any important change in properties. Nylon, GE's Lexan, and PVC—examples of this type of plastic—are resilient after molding.

thermoset A material that hardens or sets when heated and, once set, cannot be resoftened by heating. This application of heat is called "curing."

thermosetting plastic A type of plastic in which an irreversible chemical reaction takes place while the plastic is being molded under heat and pressure.

thermosetting adhesive A curing adhesive that requires heat to promote curing. This type of plastic will not soften when reheated. See epoxy.

time-delay A circuit that delays the transmission of an impulse for a definite and desired period of time.

TNC Connector A radio frequency connector covered by Military Specification. It has an impedance of 50 ohms and is designed to operate in a 0 to 11 GHz frequency range. Reliability is assured by a threaded coupling that can be safely wired to prevent accidental disconnect.

tolerance The total amount by which a quantity is allowed to vary from nominal; thus, the tolerance is half the algebraic difference between the maximum and minimum limits.

Catalog 1308940
Revised 9-14

www.te.com

Dimensions are shown for reference purposes only. Specifications subject to change.

Dimensions are in millimeters unless otherwise specified.

USA: +1 800 522 6752
Asia Pacific: +86 0 400 820 6015
UK: +44 800 267 666

For additional support numbers please visit www.te.com

Glossary of Terms (Continued)

traceability The ability to trace the history, application, or location of an item and like items or activities by means of recorded identification. The lot number/manufacturing order (MO) number, or SMO number used to identify items or groups of items is traceable back to inspection and procurement records.

transmission cable Two or more transmission lines. If the structure is flat, it is sometimes called flat transmission cable to differentiate it from a round structure such as a jacketed group of coaxial cables. See also transmission line.

transmission line A signal-carrying circuit with controlled electrical characteristics; used to transmit high-frequency or narrow-pulse signals.

triaxial cable A concentrically constructed cable, with a common axis, composed of a center connector, first shield, and second shield, all insulated from each other.

U

UG Symbol used to describe coaxial connectors that were made to a Government specification. This specification is now obsolete.

UL (Underwriters' Laboratories) A nonprofit independent testing organization that operates a listing service for electrical and electronic materials and equipment.

ultra-high frequency (uhf) A Federal Communications Commission designation for the band from 300 to 3000 MHz on the radio spectrum. In television — channels 14 to 83 or 470 to 890 MHz.

ultraviolet degradation The degradation caused by long-time exposure of a material to sunlight or other ultraviolet rays.

V

velocity of propagation The ratio of the speed of a radio frequency wave within a cable or dielectric as compared with the same wave in free space.

very high frequency (vhf) A Federal Communications Commission designation for the band from 30 to 300 MHz on the radio spectrum.

voice-frequency (vf) Any frequency within that part of the radio frequency range essential to speech transmission of a commercial quality (i.e., 300 to 3400 Hz). Also referred to as telephone frequency.

volt (V) The unit of measurement for electromotive force (emf). It is equivalent to the force required to produce 1 ampere through a resistance of 1 ohm.

voltage (E) The term most often used to designate electrical pressure that exists between two points and is capable of producing a flow of current when a closed circuit is connected between the two points. Voltage is measured in volts, millivolts, microvolts and kilovolts. The terms electromotive force (emf), potential, potential difference and voltage drop are often referred to as voltage.

voltage breakdown The voltage necessary to cause insulation failure.

voltage drop The voltage developed across a component or conductor by the flow of current through the resistance or impedance of that component or conductor.

voltage hold over refers to the maximum line voltage at which recovery of the GDT to its inactive state will take place within a specified period of time (normally 150ms) after an induced lightning pulse (normally 10/1000ms) has been applied.

voltage rating The voltage that may be continuously applied to wire.

volume resistivity Reciprocal of conductivity; the resistance of a material to the flow of electrical current, usually expressed in ohm-cm.

VSWR (Voltage Standing Wave Ratio) A measure of the uniformity of impedance along a transmission line, or the quality of the impedance match between a line and the source or load.

VW-1 A rating determined by the Underwriters' Laboratories' (UL) optional Vertical Wire Flame Test—the most difficult flame test for tubing. Tubings with a VW-1 rating are highly flame-retardant.

W

wall thickness The thickness of the applied insulation or jacket.

water absorption test A method to determine the water uptake of a material. It is time and temperature dependent.

water blocking The sticking together of insulated wires; usually caused by heat.

wavelength The distance between two points which are in phase on adjacent waves. It is the distance traveled by the wave in the same span of one cycle. Electromagnetic waves (both light and radio) have a speed in space of about 300,000,000 meters (186,000 miles) per second. Thus wavelength in meters is equal to 300,000,000 divided by frequency.

wetting (solder) The formation of a relatively uniform, smooth, unbroken, and adherent film of solder to a base metal. Also, the free flow of solder alloy, with proper application of heat and flux, on a metallic surface to produce an adherent bond.

wicking The longitudinal flow of a liquid in a wire or cable construction due to capillary action. (This may also apply to solder.)

wire A single conductor covered with insulation.

wire dress The orderly arrangement of wires and laced harnesses.

withstanding voltage The test voltage an electrical connector can withstand for one minute without showing evidence of electrical breakdown when the voltage is applied between conductors and grounding devices of the connectors in various combinations.

Z

Z Letter symbol used to represent impedance in ohms.

Part Number Index

Note: This index lists all cataloged parts by base no. only. Complete part nos. (with prefixes and/or suffixes) are shown on the page(s) indicated.

Part No.	Page
010*	2-105 to 2-107, 2-111, 2-112, 2-115 to 2-117, 2-127, 2-134, 2-137
031*	2-104, 2-107 to 2-110, 2-112 to 2-117, 2-141, 2-142
032*	2-104 to 2-106, 2-110, 2-111, 2-114, 2-115, 2-117, 2-140 to 2-143
033*	2-118, 2-120 to 2-122
051*	2-104, 2-107, 2-108, 2-110, 2-113, 2-114, 2-116, 2-117, 2-143, 2-146, 2-147
052*	2-104 to 2-106, 2-110, 2-111, 2-115, 2-117, 2-118, 2-140, 2-141, 2-143, 2-144
053*	2-118, 2-120, 2-121, 2-122, 2-146, 2-147
131*	2-126, 2-127, 2-145
132*	2-124, 2-125, 2-144
141*	2-129, 2-130, 2-132 to 2-134
142*	2-129, 2-131, 2-133
143*	2-130, 2-135, 2-136
144*	2-137
145*	2-137
19840	3-33
23174	1-77
31807	10-5
31808	10-5
31811	10-6
31812	10-6
31880	10-30
31890	10-30
31894	10-30
31895	10-30
31897	10-30
33114	10-6
33115	10-6
33220	10-5
33457	10-5
33459	10-5
33461	10-5
33463	10-5
33466	10-5
33467	10-5
34103	10-5
34104	10-5
34110	10-5
34112	10-5
34114	10-5
34115	10-5
34119	10-5
34125	10-5
34126	10-5
34318	10-13
35107	10-31
35108	10-31
35109	10-31
35110	10-31
35111	10-31
35112	10-31
35135	10-5
35476	10-5
36149	10-30, 10-32, 10-33
36150	10-30
36153	10-30, 10-32, 10-33
36154	10-30
36161	10-31, 10-34
36918	10-6
36919	10-6
36935	10-6
50079	8-149
50080	8-149
50834	10-11
50836	10-11
50844	10-20
50845	10-11, 10-20
50846	10-11, 10-20
50847	10-20
50848	10-20
51565	8-150, 8-151
51692	2-6, 2-88
51863	10-30, 10-32, 10-33
51864	10-31, 10-33
52077	10-31, 10-34
52189	10-30
52273	10-32
52274	10-33
53049	10-32
53050	10-32
53051	10-32
53053	10-32
53054	10-32
53055	10-32
53056	10-32
53057	10-32
53073	10-30
53078	10-32
53400	10-39
53401	10-39
53402	10-39
53403	10-39
53404	10-39
53405	10-39
53406	10-39
53407	10-39
53408	10-39
53409	10-39
53410	10-39
53411	10-39
53412	10-39
53413	10-39
53414	10-39
53415	10-39
53416	10-39
53417	10-39
53418	10-39
53419	10-39
53420	10-39
53421	10-39
53422	10-39
53423	10-40
53424	10-40
53425	10-40
53426	10-40
53427	10-40
53428	10-40
53429	10-40
53546	10-36
53547	10-36
53548	10-36
53549	10-36
53809	10-39
54310	10-30
54311	10-30
54312	10-30
55832	10-26
55833	10-26
55834	10-26
55835	10-26
55836	10-26
55837	10-26
55838	10-26
55839	10-26
55840	10-26
55841	10-26
55844	10-26
55944	10-25
55982	10-26
55984	10-27
58107	1-13
58212	8-64
58284	8-28
58532	3-33
59524	1-106
59993	8-64
60789	9-29
61276	9-29
66005	1-100
66009	1-100
66010	1-100, 1-106
66011	1-100, 1-106
66021	1-100
66026	1-100, 1-106
66027	1-100
66086	1-100
66098	8-145
66099	8-145, 9-29, 9-33
66100	8-145
66101	8-145, 9-29, 9-33
66102	8-145
66103	8-145
66104	8-145
66105	8-145
66106	8-145
66107	8-145
66108	8-145
66109	8-145
66253	8-147
66254	8-147
66255	8-147
66256	8-147
66259	8-147, 9-30
66260	8-147
66261	8-147, 9-30
66262	8-147
66331	8-145
66332	8-145
66358	8-145
66359	8-145
66360	8-145
66361	8-145
66393	8-145
66394	8-145
66399	8-145, 9-29, 9-33
66400	8-145, 9-29, 9-33
66405	8-145
66406	8-145
66424	8-145
66425	8-145
66428	8-145
66429	8-145
66563	8-145
66564	8-145
66565	8-145
66566	8-145
66577	8-146
66578	8-146
66579	8-146
66580	8-146
66581	8-146
66582	8-146
66583	8-146
66584	8-146
66585	8-146
66586	8-146
66587	8-146
66588	8-146
66589	8-146
66590	8-146
66591	8-146
66592	8-146
66593	8-146
66594	8-146
66595	8-146
66596	8-146
66597	8-145
66598	8-145
66601	8-145
66602	8-145
66740	8-147, 9-30
66741	8-147, 9-30
87961	1-95, 1-96, 1-97
87962	1-95, 1-96, 1-97
87964	1-95, 1-96, 1-97
87965	1-96, 1-97
87971	1-93, 1-94
90005	1-106
91066	3-30, 3-33, 8-28
91067	8-28, 8-39, 8-40, 8-44, 8-45, 8-69
91074	8-28
91555	1-106
102188	1-93, 1-94, 1-95, 1-96, 1-97, 1-98
102192	1-98
102193	1-98

Part Number Index (Continued)

Part No.	Page
102196	1-98
102275	1-92, 1-93, 1-94
102277	1-95, 1-96, 1-97
102278	1-96, 1-97
102281	1-98
125905	4-53, 8-87
131250	6-8
134265	10-20
151437	10-17
151438	10-17
151439	10-17
151440	10-17
151441	10-17
151458	10-17
151626	3-21
152642	10-19, 10-20
152643	10-19, 10-20
152644	10-19, 10-20
152645	10-19, 10-20
152646	10-19, 10-20
152647	10-19, 10-20
152648	10-19
152654	10-19, 10-20
152655	10-19
152656	10-19, 10-20
152657	10-19, 10-20
152658	10-19, 10-20
152659	10-19, 10-20
152660	10-19
152661	10-19, 10-20
152662	10-19, 10-20
152663	10-19, 10-20
152869	10-18
152870	10-18
152871	10-18
152872	10-18
152873	10-18
152874	10-18
152875	10-18
152876	10-18
152877	10-18
152878	10-18
152879	10-18
152880	10-18
152881	10-18
152882	10-18
152883	10-18
152884	10-18
152885	10-18
152886	10-18
152887	10-18
152888	10-17
152889	10-17
152890	10-17
152891	10-17
152892	10-17
152893	10-17
152894	10-17
152895	10-17
152896	10-17
152897	10-17
152898	10-17

Part No.	Page
152899	10-17
153103	10-19, 10-20
153104	10-19, 10-20
153105	10-19, 10-20
153106	10-19, 10-20
153107	10-19, 10-20
153108	10-19, 10-20
153109	10-19, 10-20
153110	10-20
153111	10-20
153112	10-20
153113	10-20
153114	10-20
153115	10-20
153116	10-20
153400	10-18
153401	10-18
153402	10-18
153403	10-18
153475	10-19
153476	10-20
153493	10-19
154924	10-17
154927	10-18
154930	10-18
184113	10-25
194081	8-40
194083	8-40
200333	8-144, 9-35
200336	8-144
200679	9-35
200681	9-35
201097	8-148
201098	8-148
201143	8-148, 8-149
201144	8-148, 8-149
201145	8-148, 8-149
201146	8-148, 8-149
201328	8-144, 9-35
201330	8-144
201332	8-144
201334	8-144
201511	8-148, 8-149
201568	8-144, 9-35
201570	8-144
201578	8-144
201580	8-144
201611	8-144
201613	8-144
201645	9-35
202275	8-152
202279	8-152
202283	8-154
202287	8-154
202301	8-155
202305	8-155
202410	8-144
202411	8-144
202417	8-143
202418	8-143
202421	8-143
202422	8-143

Part No.	Page
202507	8-144
202508	8-144
202567	8-155
202617	8-155
202624	8-143
202625	8-143
202648	8-143, 8-243
202649	8-143
202650	8-143
202651	8-143
202680	8-153
202681	8-153
202725	8-144
202726	8-144
202759	8-143
202760	8-143, 8-243
202764	8-155
202786	8-152
202789	8-153
202795	8-154
202832	8-155
202946	1-78
202947	1-78
203802	8-105, 9-28, 9-36
203803	8-107
203804	8-107
203814	8-114
203816	8-105, 9-28, 9-36
203839	4-33, 4-59
203874	8-105
203875	8-105
203881	8-113
203882	8-113
204027	8-108
204030	8-108
204219	8-144
204259	8-107
204260	8-107
204281	8-107
204282	8-107
204337	8-114
204351	8-68
204370	8-68, 8-74, 8-103
204500	8-72, 8-80, 8-97
204501	8-70
204501	8-80, 8-99
204502	8-72, 8-80, 8-97
204503	8-70, 8-80, 8-99
204504	8-72, 8-80, 8-97
204505	8-70, 8-80, 8-99
204506	8-72, 8-80, 8-97
204507	8-70, 8-80, 8-99
204508	8-72, 8-80, 8-97
204509	8-70, 8-80, 8-99
204510	8-72, 8-97
204511	8-70, 8-99
204512	8-72, 8-97
204513	8-70, 8-98, 8-99
204514	8-72, 8-97
204515	8-70, 8-98, 8-99
204516	8-72, 8-97
204517	8-70, 8-98, 8-99

Part No.	Page
204518	8-72, 8-97
204519	8-70, 8-98, 8-99
204520	8-72, 8-97
204521	8-70, 8-98, 8-99
204522	8-72, 8-97
204523	8-70, 8-98, 8-99
204524	8-72, 8-98
204525	8-70, 8-99
204526	8-72, 8-98
204527	8-70, 8-99
204528	8-72, 8-98
204529	8-70, 8-99
204530	8-72, 8-98
204531	8-70, 8-99
204532	8-72, 8-98
204533	8-70, 8-99
204534	8-72, 8-98
204535	8-70, 8-99
204536	8-72, 8-97, 8-98
204537	8-70, 8-99
204538	8-72, 8-97, 8-98
204539	8-70, 8-99
204540	8-72, 8-97, 8-98
204541	8-70, 8-99
204542	8-72, 8-97, 8-98
204543	8-70, 8-99
204544	8-72, 8-97, 8-98
204545	8-70, 8-99
204546	8-72, 8-97, 8-98
204547	8-70, 8-99
204682	8-110
204683	8-110
204684	8-110
204685	8-110
204686	8-110
204687	8-110
204688	8-110
204689	8-111
204690	8-111
204691	8-112
204692	8-112
204693	8-108
204694	8-108
204727	8-107
204728	8-107
204729	8-107
204731	8-107
204732	8-107
204733	8-107
204734	8-107
204735	8-107
204736	8-107
204737	8-107
204738	8-107
204740	8-107
204741	8-107
204742	8-107
204743	8-107
204744	8-107
204745	8-107
204746	8-107
204747	8-107

Catalog 1308940
Revised 9-14

www.te.com

Dimensions are shown for reference purposes only. Specifications subject to change.

Dimensions are in millimeters unless otherwise specified.

USA: +1 800 522 6752
Asia Pacific: +86 0 400 820 6015
UK: +44 800 267 666

For additional support numbers please visit www.te.com

Part Number Index (Continued)

Part No.	Page
204748	8-107
204749	8-107
204750	8-107
204760	4-33, 4-59
204818	8-109
204819	8-109
204873	4-53
204938	4-53
205083	8-114
205089	8-38, 8-44, 8-103
205090	8-38
205103	4-53
205116	4-53
205117	4-54
205120	8-113
205161	8-41, 8-59, 8-97
205162	8-41, 8-59, 8-99
205163	8-41, 8-59, 8-97
205164	8-41, 8-59, 8-99
205165	8-41, 8-59, 8-97
205166	8-41, 8-59, 8-99
205167	8-41, 8-59, 8-97
205168	8-41, 8-59, 8-99
205169	8-41, 8-59, 8-97
205170	8-41, 8-59, 8-99
205171	8-105
205172	8-105
205282	4-59
205283	4-59
205402	4-33, 4-59
205408	8-41, 8-99
205409	8-41, 8-99
205412	8-41, 8-99
205413	8-41, 8-99
205414	8-41, 8-99
205415	8-41, 8-99
205416	8-41, 8-98
205417	8-41, 8-98
205418	8-41, 8-98
205419	8-41, 8-98
205420	8-41, 8-98
205431	8-41, 8-99
205432	8-41, 8-97, 8-98
205433	8-41, 8-97, 8-98
205483	8-41, 8-97, 8-98
205484	8-41, 8-97, 8-98
205485	8-41, 8-97, 8-98
205486	8-41, 8-99
205487	8-41, 8-99
205488	8-41, 8-99
205544	4-53
205547	4-53
205548	4-54
205555	8-41, 8-97
205556	8-41, 8-98, 8-99
205557	8-41, 8-97
205558	8-41, 8-98, 8-99
205559	8-41, 8-97
205560	8-41, 8-98, 8-99
205561	8-41, 8-97
205562	8-41, 8-98, 8-99
205563	8-41, 8-97

Part No.	Page
205564	8-41, 8-98, 8-99
205574	4-33, 4-59
205694	8-113
205753	4-53
205763	4-54
205791	4-53
205817	8-37, 8-67, 8-101
205851	4-54
205975	4-33, 4-59
206063	8-74, 8-103
206064	8-75, 8-103
206065	8-75, 8-103
206066	8-74, 8-103
206071	8-75, 8-103
206210	4-53
206211	4-54
206495	8-74
206496	8-75
206498	8-74, 8-103
206499	8-75, 8-103
206500	8-74, 8-103
206501	8-75, 8-103
206502	8-74, 8-103
206503	8-75, 8-103
206504	8-74, 8-103
206505	8-75, 8-103
206793	8-45, 8-103
206794	8-44
206795	8-45
206798	8-44, 8-103
206799	8-45, 8-103
206800	8-44, 8-103
206801	8-45, 8-103
206802	8-44, 8-103
206803	8-45, 8-103
206804	8-44, 8-103
206805	8-45, 8-103
207252	8-44, 8-103
207253	8-45, 8-103
207683	8-69, 8-77
207684	8-69, 8-77
208019	4-15
208021	4-15
208215	4-20
208262	4-19, 4-27, 4-53
208264	4-19, 4-40, 4-53
208265	4-19, 4-27, 4-40, 4-53
208267	4-19, 4-27, 4-40, 4-53
208268	4-19, 4-27, 4-54
208270	4-19, 4-27, 4-40, 4-54
208271	4-19, 4-27, 4-54
208273	4-19, 4-27, 4-40, 4-54
208550	8-60, 8-102
208551	8-60, 8-102
208552	8-60, 8-66, 8-102
208597	4-35
208598	4-35
208599	4-35
208600	4-35
208742	8-60, 8-102
208743	8-60, 8-66, 8-102
208744	8-60, 8-102

Part No.	Page
208778	8-39
208810	8-60, 8-102
208811	8-60, 8-102
208866	8-77
208867	8-77
208868	8-77
208869	8-77
208870	8-77
208871	8-77
208872	8-77
208873	8-77
208874	8-77
208875	8-77
208876	8-77
208877	8-77
208970	4-35
208971	4-35
208972	4-26, 4-36
208973	4-26, 4-37
208974	4-37
208975	4-37
208976	4-37
208977	4-37
211010	8-79
211011	8-79
211012	8-79
211013	8-79
211014	8-79
211015	8-79
211111	8-60, 8-66, 8-102
211112	8-60, 8-66, 8-102
211159	8-63
211161	8-63
211216	4-23
211229	4-23
211245	4-20
211431	4-20
211525	8-98
211526	8-98
211527	8-98
211528	8-98
211529	8-98
211536	8-98
211537	8-98
211538	8-98
211539	8-98
211540	8-98
211541	8-98
211558	4-23
211600	4-33
211633	8-45
211634	8-45
211635	8-45
211636	8-45
211637	8-45
211638	8-44
211639	8-44
211640	8-44
211641	8-44
211642	8-44
211667	8-75
211668	8-75

Part No.	Page
211669	8-75
211670	8-75
211671	8-75
211672	8-75
211673	8-74
211674	8-74
211675	8-74
211676	8-74
211677	8-74
211678	8-74
211883	8-37, 8-67, 8-94, 8-101
211901	4-40, 4-26, 4-36
211992	4-37
212007	8-63
212008	8-63
212013	8-63
212014	8-63
212049	8-61
212051	8-61
212053	8-61
212055	8-61
212057	8-61
212059	8-60, 8-66, 8-102
212447	6-25, 8-93, 8-101
212452	8-93
212491	8-60, 8-66, 8-102
212498	8-60, 8-102
212502	8-60, 8-102
212506	8-60, 8-102
212510	8-60, 8-102
212514	8-60, 8-102
212518	8-60, 8-102
212522	8-60, 8-66, 8-102
212526	8-60, 8-66, 8-102
212530	8-60, 8-66, 8-102
212534	8-60, 8-66, 8-102
212538	8-60, 8-102
212542	8-60, 8-102
212565	8-39
212618	8-144
212933	8-76
213090	8-143
213091	8-143
213092	8-143
213093	8-143
213118	8-76
213122	4-40
213123	4-40
213153	8-76
213156	4-40
213157	4-40
220015	2-5
220215	1-24
220216	1-24
221117	2-14, 2-88
221265	2-8
221313	2-88
221447	2-22, 2-90
221597	4-22
221980	8-64
222018	4-23, 4-56

Part Number Index (Continued)

Part No.	Page
222190	4-25, 4-40
222191	4-25, 4-40
225014	2-6, 2-88
225088	8-150
225092	2-6, 2-88
225093	2-6, 2-88
225094	2-6, 2-88
225345	2-10
225348	2-10, 2-88
225361	2-6
225389	2-6
225392	2-6
225532	2-14, 2-88
225550	2-10, 2-88
225551	2-10, 2-88
225609	2-89
225661	2-6
225664	2-6
225668	2-6
225669	2-6
225790	4-24, 4-58
225791	4-24, 4-58
225792	4-57
225831	4-23, 4-56
225837	4-23, 4-56
225935	4-58
225936	4-58
226053	4-57
226537	8-150, 8-151
226781	4-58
226782	4-58
227531	2-25, 2-91
227602	1-23, 1-24, 1-68, 1-69, 1-70
227603	1-22, 1-24, 1-66, 1-70
227604	1-23, 1-24, 1-69, 1-70
227605	1-24, 1-66, 1-70
227606	1-24, 1-66, 1-70
227743	2-22, 2-90
227868	2-22, 2-90
228011	4-57
228433	3-33
228583	2-23, 2-90
228596	8-64
228618	8-64
228626	2-23, 2-90
228634	2-22, 2-90
228635	2-25, 2-91
228639	2-22, 2-90
273122	6-8
277147	10-25
277148	10-25
277149	10-25
277150	10-25
277151	10-25
277152	10-25
277153	10-25
277154	10-25
277155	10-25
277156	10-27
277157	10-27
277158	10-27

Part No.	Page
277159	10-27
277160	10-27
277161	10-27
277162	10-27
277163	10-27
277164	10-27
277165	10-27
277168	10-27
320093	10-5
320344	10-5
320383	10-6
320551	10-30, 10-32, 10-33
320553	10-30
320559	10-36
320561	10-31, 10-33
320562	10-36
320563	10-31, 10-33
320564	10-31, 10-33
320567	10-31
320568	10-31, 10-34
320569	10-31, 10-34
320570	10-36
320571	10-30, 10-32, 10-33
320572	10-30, 10-32, 10-33
320573	10-30, 10-32, 10-33
320575	10-31, 10-33
320576	10-31, 10-34
320577	10-31, 10-34
320741	10-6
321271	10-6
321298	10-5
321598	10-5
321600	10-6
321625	10-6
321684	10-5
321866	10-6
321867	10-6
321868	10-6
321869	10-6
321870	10-6
321871	10-6
321872	10-6
321873	10-6
321874	10-6
321875	10-6
321876	10-6
321877	10-6
321878	10-6
321879	10-6
321880	10-6
321884	10-13
321885	10-13
321889	10-13
321890	10-13
321891	10-13
321892	10-15
321893	10-15
321894	10-15
321897	10-15
321898	10-15
322228	10-6
322320	10-15

Part No.	Page
322324	10-14
322326	10-14
322329	10-13
322334	10-13
322335	10-13
322337	10-16
322338	10-16
322339	10-13
322345	10-14
322347	10-14
322363	10-15
322365	10-15
322366	10-15
322375	10-15
322695	10-12
322733	10-12
322797	10-12
322798	10-12
322799	10-12
322822	10-13
322870	10-6
323030	10-13
323062	10-12
323064	10-12
323066	10-15
323068	10-15
323069	10-15
323151	10-15
323152	10-15
323153	10-15
323161	10-15
323165	10-12
323166	10-12
323167	10-12
323169	10-12
323172	10-12
323173	10-12
323177	10-12
323199	10-15
323219	10-12
323672	10-14
323680	10-14
323683	10-14
323696	10-14
323698	10-14
323745	10-14
323749	10-16
323750	10-16
323751	10-16
323754	10-13
323755	10-13
323794	10-13
323795	10-13
323796	10-13
323878	10-14
323913	10-30
323914	10-30
323916	10-30
323975	10-36
323994	10-36
324043	10-42
324044	10-42

Part No.	Page
324045	10-42
324046	10-42
324047	10-42
324048	10-42
324049	10-42
324050	10-42
324051	10-42
324052	10-42
324053	10-42
324054	10-42
324055	10-42
324056	10-42
324057	10-42
324058	10-42
324061	10-5
324075	10-30
324082	10-42
324083	10-42
324084	10-42
324085	10-42
324113	10-42
324159	10-31
324185	10-42
324187	10-42
324188	10-42
327175	10-6
327932	10-35
327934	10-35
327936	10-35
327938	10-35
327940	10-35
327942	10-35
327944	10-35
327946	10-35
327948	10-35
327950	10-35
327952	10-35
327954	10-35
327956	10-35
327958	10-35
327960	10-35
327962	10-35
327964	10-35
327966	10-35
327968	10-35
327970	10-35
327972	10-35
328663	8-149
328664	8-148, 8-149
328666	8-148, 8-149
328667	8-148, 8-149
328822	10-14
328859	10-11
328975	10-30, 10-32, 10-33
328976	10-31, 10-33
329006	8-148
329029	8-149
330301	10-6
330478	8-148
330587	8-149
331350	2-8, 2-88
331351	2-8, 2-88

Dimensions are shown for reference purposes only. Specifications subject to change.

Dimensions are in millimeters unless otherwise specified.

USA: +1 800 522 6752
Asia Pacific: +86 0 400 820 6015
UK: +44 800 267 666

For additional support numbers please visit www.te.com

Part Number Index (Continued)

Part No.	Page
331693	2-8, 2-88
332056	8-150
332057	8-150, 8-151
413242	8-65
413249	8-65
443102	4-38
443118	9-58
443279	8-95
443631	8-50
443637	8-50
443638	8-50
443646	8-50
443815	9-53
443832	9-45
443903	9-32
443904	9-32
443915	9-53
443916	9-53
443965	4-38
443975	8-47, 8-99
443976	8-47, 8-100
443977	8-47, 8-100
443978	8-47, 8-100
445000	8-61
445005	8-46
445006	8-46
445007	8-46
445008	8-46
445009	8-46
445010	8-76
445011	8-76
445012	8-76
445159	9-4
445162	9-4
445181	9-44
445185	1-15
445217	9-24
445269	1-33, 1-37
445270	1-31, 1-36
445701	8-61
445705	8-60, 8-102
445717	4-26, 4-37
445718	4-26
445726	8-61
445730	8-60, 8-102
445814	4-20
445918	4-59
446080	1-65
446081	1-64
446405	8-60, 8-102
446549	4-23
446629	1-78
446630	8-61
446631	8-61
446709	4-23
446710	8-61
446711	8-61
446743	4-33
446744	4-33
446748	4-23
446775	9-52
446852	1-63

Part No.	Page
446853	1-61
446900	9-53
446947	9-52
447006	1-37
447007	1-37
447087	4-23
447095	4-23
447118	4-23
447141	4-38
447142	4-38
447143	4-38
447144	4-38
447162	4-59
447192	1-61
447193	1-61
447255	1-62
447280	4-38
447346	4-22
447373	1-63
447380	1-63
447441	1-16
447444	1-35, 1-37
447445	1-37
447446	1-37
447447	1-34, 1-36
447448	1-36
447717	8-61
447718	8-61
447719	8-61
447720	8-61
447721	8-61
447722	8-61
447723	8-61
447724	8-61
447725	8-61
447726	8-61
447727	8-61
447728	8-61
447730	8-61
447731	8-61
447732	8-61
447733	8-61
447850	4-24, 4-58
447851	4-24
447913	9-50
447914	9-50
448012	4-15
448013	4-15
448138	4-21
448139	4-21
448140	4-21
448153	8-60, 8-102
448154	8-102
448312	4-25
448313	4-25
448445	1-28
448446	1-29
448462	9-8
448463	9-14
448464	9-11
448479	9-42
448482	4-35

Part No.	Page
448540	4-25
448541	4-25
448542	4-25
448543	4-25
449379	8-63
449578	9-6
449599	1-14
449601	1-29
449619	1-29
449650	1-28
449652	9-50
449690	9-14
449810	9-44
449836	4-36
449837	4-36
449908	4-22
449925	9-18
453800	3-52
454103	3-52
455335	3-44
455360	3-44
455494	3-38
455500	3-38
455616	3-38
455617	3-38
455737	3-38
455738	3-38
456099	3-52
457440	3-44
465199	1-106
466819	1-59
466904	8-105
466943	1-59
481350	6-8
501197	3-33
501523	3-33
501857	3-33
502130	3-33
503887	3-33
504035	3-33
504064	3-33
530328	1-77
530340	1-47
530341	1-77, 1-89
530345	1-77
530346	1-77
530347	1-77
530719	1-17
530720	1-13
530721	1-27
530733	1-17
530743	1-17
530744	1-17
530750	1-56
530752	1-57
530753	1-57
530754	1-56, 1-58
530755	1-57
530758	1-47
530761	1-53
530763	1-49
530776	1-47

Part No.	Page
530777	1-49
530778	1-49
530779	1-50
530780	1-50
530781	1-50
530782	1-47
530785	1-41
530884	1-57
530885	1-57
530886	1-57
530942	1-54
531122	1-17
531124	1-42
531127	1-42
531129	1-40
531133	1-63
531134	1-61
531137	1-63
531138	1-61
531139	1-61
531140	1-61
531141	1-56
531142	1-40
531143	1-40
531144	1-40
531145	1-40
531146	1-40
531147	1-40
531148	1-40
531216	1-59
531586	1-100, 1-106
531587	1-100, 1-106
531589	1-100, 1-106
531590	1-104
531713	1-77
531714	1-77
531715	1-77
531719	1-42
531720	1-42
531721	1-28, 1-54
531722	1-54
531802	1-59
531803	1-17
531810	1-40
531811	1-40
531812	1-40
531813	1-40
531814	1-40
531815	1-40
531816	1-40
531817	1-40
531819	1-23
531820	1-22
531832	1-47
531833	1-47
531834	1-47
531835	1-47
531836	1-49
531837	1-49
531838	1-49
531840	1-59
531841	1-59

Part Number Index (Continued)

Part No.	Page
531984	1-60
531985	1-58, 1-60
531993	1-58
532021	1-60
532469	1-51
532483	1-58
532484	1-58
532488	1-55
532775	1-63
532796	1-23
532797	1-22
532804	1-90
532805	1-90
533170	1-67
533171	1-69
533181	1-67
533182	1-69
533189	1-67
533194	1-57
533285	1-81
533287	1-83
533289	1-84
533423	1-90
533424	1-90
533427	1-81
533472	1-82
533484	1-82
533492	1-81
533495	1-83
533499	1-81
533606	1-66
533607	1-68
533637	1-69
533639	1-67
533650	1-84
533656	1-81
533657	1-83
533693	1-84
533694	1-81
534164	1-27
534175	1-13
534179	1-19
534180	1-20
534195	1-52
534650	1-52
534688	1-21
582151	1-103
582156	1-105
582307	1-103
582364	1-100
582819	1-103
582828	1-103
582830	1-103
582831	1-103
582832	1-103
582843	1-101, 1-102
583218	1-78
583254	1-77
583452	1-78
583812	1-78
591601	8-165
591603	8-165
591613	8-164, 8-177
591621	8-164, 8-177
591637	8-164
591638	8-164
591829	8-172
591841	8-172
591842	8-172
591846	8-172
591847	8-172
591854	8-172
591855	8-172
591857	8-172
591863	8-172
591864	8-172
591865	8-172
591866	8-172
591871	8-172
591872	8-172
591873	8-172
591875	8-172
591876	8-172
591889	8-172
591890	8-172
591892	8-172
591893	8-172
591894	8-172
591895	8-172
591896	8-172
591898	8-172
591899	8-172
591911	8-172
591917	8-172
591992	8-172
592104	8-32, 8-160
592105	8-28
592404	8-160
592413	8-160
592575	8-176
592583	8-167, 8-176
592588	8-167
592589	8-167
592600	8-161
592601	8-178
592602	8-179
592603	8-178
592604	8-161
592605	8-178
592606	8-179
592607	8-178
592608	8-161
592609	8-177
592610	8-179
592611	8-178
592614	8-179
592615	8-178
592616	8-161, 8-176
592617	8-173
592618	8-175
592619	8-174
592620	8-161, 8-176
592621	8-173
592622	8-175
592623	8-174
592624	8-161, 8-175
592625	8-173
592626	8-175
592627	8-174
592629	8-161, 8-175
592630	8-173
592631	8-173, 8-174
592632	8-174
592633	8-161, 8-175
592634	8-173
592635	8-174
592636	8-173
592820	8-166
592830	8-166
592836	8-166
592840	8-166
592887	8-172
593002	8-98
593004	8-98
593007	8-97
593008	8-97
593009	8-97
593036	8-99
593037	8-99
593038	8-99
593326	8-78
593327	8-78
599406	4-55, 8-38, 8-68, 8-87
601966	8-28, 8-44, 8-45, 8-87
601967	8-28
608650	8-28
650844	1-81
745776	8-95
745777	8-95
747024	8-95
747025	8-95
748558	8-93
811262	6-25
822542	6-8
822548	6-8
830126	9-12, 9-13
830149	9-15
830174	9-8
830177	9-8
830178	9-8
830200	9-8
830395	9-8
830611	9-5
830612	9-5
830613	9-9
830614	9-9
830632	9-54
830637	9-16, 9-17
830638	9-16, 9-17
830649	9-21
830699	9-18
830903	6-8
834333	9-14
836567	9-26
836674	9-15
837655	9-12, 9-13
837975	9-21
839564	9-19
839565	9-19
840467	9-26
840468	9-26
846290	9-24
846291	9-24
846556	9-56
846793	9-15
846814	9-18
846938	9-16, 9-17
846950	9-25
846977	9-55
846985	9-6
848075	9-19
848076	9-22
848077	9-22
848078	9-24
848588	9-55
848816	9-55
849055	9-63
849099	9-12, 9-13
849103	9-13
849104	9-12, 9-13
849252	9-63
849253	9-63
849254	9-63
849267	9-63
849275	9-63
849371	9-19
849418	9-8
849424	9-56
849587	9-23
849588	9-20, 9-23
849610	9-14
849616	9-16, 9-17
849662	9-15
849671	9-15
849693	9-15
849768	9-63
849775	9-63
849853	9-26
850306	9-14
850512	9-63
850513	9-63
850514	9-63
850515	9-63
850554	9-26
850555	9-20
850735	9-20
850736	9-11
850908	9-23
850909	9-23
850910	9-20
850911	9-23
850912	9-26
858030	9-18
858082	9-11
858827	9-14
858855	9-11
858856	9-11
858857	9-11

Catalog 1308940
Revised 9-14

www.te.com

Dimensions are shown for reference purposes only. Specifications subject to change.

Dimensions are in millimeters unless otherwise specified.

USA: +1 800 522 6752
Asia Pacific: +86 0 400 820 6015
UK: +44 800 267 666

For additional support numbers please visit www.te.com

Part Number Index (Continued)

Part No.	Page
858868	9-18
858873	9-18
858885	9-6
858886	9-10
858945	9-10
859058	9-18
859111	9-60
859113	9-60
859526	9-35
859527	9-35
859528	9-35
859529	9-35
860261	9-35
860263	9-35
860265	9-35
860267	9-35
860529	9-6
860708	9-23
861076	9-62
861214	9-41, 9-44
861215	9-41, 9-44
861252	9-8
861253	9-11
861254	9-12, 9-13, 9-14
861255	9-17, 9-18
861256	9-19, 9-20
861257	9-23
861258	9-25, 9-26
861610	9-29
861611	9-29
861647	9-35
861648	9-35
861657	9-54
861658	9-54
861660	9-54
861662	9-54
861753	9-29
861807	9-7
861808	9-7
861809	9-10
861810	9-10
861811	9-12, 9-13
861812	9-12, 9-13
861813	9-16, 9-17
861814	9-16, 9-17
861999	9-40
862004	9-40
862005	9-40
862123	9-60
862124	9-60
862128	9-62
862197	9-29
862256	9-40
862294	9-61
862295	9-61
862345	9-56
862362	9-61
862363	9-61
862382	9-33
862383	9-33
862424	9-47
862425	9-47

Part No.	Page
862434	9-33
862435	9-33
862443	9-61
862444	9-61
862481	9-58
862485	9-61
862498	9-33
862514	9-62
862515	9-62
862518	9-62
862528	9-33
862536	9-60
862544	9-35, 9-40
862545	9-5
862546	9-5
862547	9-9
862548	9-9
862549	9-12, 9-13
862550	9-12, 9-13
862551	9-16, 9-17
862552	9-16, 9-17
862672	9-60
862695	9-35
862794	9-40
862798	9-35
862908	9-60
862909	9-60
863015	9-35
863016	9-35
863017	9-35
863018	9-35
863019	9-35
863103	9-30
863103	9-30
863104	9-30
863124	9-61
863125	9-61
863253	9-61
863254	9-61
863330	9-7
863350	9-30
863701	9-12, 9-13
863702	9-12, 9-13
863703	9-12, 9-13
863705	9-17
863706	9-17
863707	9-17
863743	9-47
863752	9-37
863753	9-37
863754	9-37
863755	9-37
863995	9-35
864019	9-38
864062	9-37
864063	9-37
864064	9-37
864065	9-37
864639	9-37
864900	9-50
865089	9-25
865090	9-25

Part No.	Page
865594	9-40
865656	9-40
866196	9-48
866559	9-48
866803	9-54
866804	9-54
866805	9-54
866806	9-54
867121	9-58
867156	9-28
867157	9-28
867447	9-19
867448	9-20
867462	9-42
867463	9-42
867465	9-42
867468	9-43
867469	9-43
867470	9-45
867471	9-45
867472	9-43
867473	9-43
867477	9-43
867478	9-45
867479	9-45
867482	9-42
867534	9-36
867535	9-36
867606	9-54
867615	9-55
867622	9-42
867823	9-48
867824	9-48
867862	9-39
868021	9-44
868313	9-5
868354	9-21
868373	9-56
869084	9-21
878182	6-8
878183	6-8
878495	6-8
878512	6-8
879222	6-8
879268	6-8
879514	6-8
879515	6-8
0206442	4-62
0213431	4-62
0213432	4-62
0213433	4-62
0213434	4-62
0213434	4-62
0213435	4-62
0213436	4-62
0213437	4-62
0213438	4-62
0213439	4-63
0213440	4-63
0213441	4-63
0213442	4-63
0443089	4-63

Part No.	Page
0443098	4-62
1045351	2-68
1045358	2-68, 2-92
1045369	2-75
1045370	2-68
1045381	2-68
1045398	2-68
1045401	2-68
1045410	2-68
1045418	2-68, 2-92
1045423	2-68
1045477	2-69
1045482	2-69
1045486	2-69, 2-92
1045489	2-69
1045496	2-69
1045497	2-69
1045503	2-69
1045506	2-69
1045507	2-69
1045508	2-69
1045511	2-69
1045517	2-69, 2-92
1045520	2-69
1045568	2-70
1045573	2-71
1045576	2-71
1045578	2-71
1045582	2-70
1045586	2-71
1045593	2-73
1045598	2-72
1045607	2-71
1045621	2-70
1045630	2-70
1045632	2-70
1045633	2-73
1045637	2-70
1045642	2-73
1045643	2-72
1045646	2-72
1045647	2-72
1045651	2-72
1045672	2-71
1045677	2-71
1045701	2-74
1045704	2-74
1045708	2-74
1045723	2-74
1045725	2-73
1045747	2-74
1046477	2-75
1046479	2-75
1049678	2-57
1050524	2-22, 2-90, 2-92
1050525	2-22, 2-90, 2-92
1050547	2-22, 2-90
1050548	2-22, 2-90
1050598	2-22, 2-90
1050605	2-22, 2-92
1050609	2-22, 2-92
1050629	2-22, 2-92

Catalog 1308940
Revised 9-14

www.te.com

Dimensions are shown for reference purposes only. Specifications subject to change.

Dimensions are in millimeters unless otherwise specified.

USA: +1 800 522 6752
Asia Pacific: +86 0 400 820 6015
UK: +44 800 267 666

For additional support numbers please visit www.te.com

Part Number Index (Continued)

Part No.	Page
1050631	2-22, 2-92
1050744	2-22, 2-90
1050769	2-22, 2-92
1050770	2-22, 2-92
1050774	2-22, 2-90
1050776	2-22, 2-90
1050777	2-22, 2-90
1050779	2-22, 2-90
1050781	2-22, 2-90
1050783	2-22, 2-90
1050785	2-22, 2-90
1050786	2-22, 2-90
1050787	2-22, 2-90
1050788	2-22, 2-90
1050789	2-22, 2-90
1050790	2-22, 2-90
1050791	2-91
1050792	2-22, 2-90
1050796	2-91
1050797	2-22, 2-90
1050799	2-22, 2-90
1050805	2-91
1050807	2-91
1050808	2-91
1050809	2-91
1050810	2-91
1050812	2-22, 2-90
1050813	2-22, 2-90
1050854	2-24, 2-90
1050859	2-24, 2-90
1050923	2-24, 2-90
1050924	2-24, 2-90
1050926	2-24, 2-90
1050928	2-24, 2-90
1050929	2-24, 2-90
1050931	2-24, 2-90
1050934	2-24, 2-90
1050935	2-24, 2-90
1051005	2-25, 2-91
1051013	2-25, 2-91
1051018	2-25, 2-91
1051022	2-25, 2-91
1051023	2-25, 2-91
1051026	2-25, 2-91
1051027	2-25, 2-91
1051028	2-25, 2-91
1051029	2-25, 2-91
1051032	2-25, 2-91
1051033	2-25, 2-91
1051046	2-24, 2-92
1051049	2-24, 2-90, 2-91
1051052	2-24, 2-92
1051062	2-24
1051063	2-24, 2-92
1051067	2-24, 2-92
1051081	2-24, 2-90, 2-91
1051087	2-24, 2-91
1051088	2-24, 2-91
1051091	2-24, 2-90
1051092	2-24, 2-90
1051093	2-24, 2-90
1051094	2-24, 2-90

Part No.	Page
1051097	2-24, 2-90
1051098	2-24, 2-90
1051109	2-23, 2-90, 2-92
1051110	2-23, 2-90, 2-92
1051113	2-23, 2-90, 2-92
1051114	2-23, 2-90, 2-92
1051119	2-23, 2-92
1051120	2-23, 2-92
1051163	2-23, 2-90
1051164	2-23, 2-90
1051165	2-23, 2-90
1051166	2-23, 2-90
1051168	2-23, 2-90
1051170	2-23, 2-90
1051173	2-23, 2-90
1051174	2-23, 2-90
1051175	2-23, 2-90
1051176	2-23, 2-90
1051177	2-23, 2-90
1051178	2-23, 2-90
1051650	2-14, 2-15, 2-88
1051651	2-14, 2-15, 2-88
1051660	2-14, 2-15, 2-88
1051661	2-14, 2-15, 2-88
1051664	2-14, 2-15, 2-88
1051665	2-14, 2-15, 2-88
1051678	2-14, 2-15, 2-88
1051686	2-14, 2-15, 2-88
1051687	2-14, 2-15, 2-88
1051757	2-14, 2-88
1051759	2-14, 2-88
1051762	2-14, 2-88
1051764	2-14, 2-88
1051766	2-14, 2-88
1051768	2-14, 2-88
1051769	2-14, 2-88
1051770	2-14, 2-88
1051780	2-14, 2-88
1051782	2-14, 2-88
1051785	2-15, 2-88
1051787	2-15, 2-88
1051788	2-15, 2-88
1051789	2-15, 2-88
1051791	2-15, 2-88
1051794	2-15, 2-88
1051797	2-15, 2-88
1051798	2-15, 2-88
1051799	2-15, 2-88
1051800	2-15, 2-88
1051801	2-15, 2-88
1051804	2-15, 2-88
1051810	2-15, 2-88
1051812	2-15, 2-88
1051815	2-15, 2-88
1051816	2-15, 2-88
1051817	2-15, 2-88
1051855	2-18, 2-89
1051861	2-18, 2-89
1051866	2-18, 2-89
1051868	2-18, 2-89
1051869	2-18, 2-89
1051904	2-18, 2-89

Part No.	Page
1051905	2-18, 2-89
1051906	2-18, 2-89
1051907	2-18, 2-89
1051908	2-18, 2-89
1051909	2-18, 2-89
1051910	2-18, 2-89
1051911	2-18, 2-89
1051912	2-18, 2-89
1051913	2-18, 2-89
1051914	2-18, 2-89
1051915	2-18, 2-89
1051916	2-18, 2-89
1051917	2-18, 2-89
1051918	2-18, 2-89
1051919	2-18, 2-89
1051920	2-18, 2-89
1051921	2-18, 2-89
1051922	2-18, 2-89
1051923	2-18, 2-89
1051933	2-90
1051950	2-90
1051951	2-90
1051986	2-20, 2-90
1051987	2-20, 2-90
1051988	2-20, 2-90
1051989	2-20, 2-90
1051990	2-20, 2-90
1051991	2-20, 2-90
1051992	2-20, 2-90
1051994	2-20, 2-90
1051995	2-20, 2-90
1051996	2-20, 2-90
1051997	2-20, 2-90
1051998	2-20
1051999	2-90
1052024	2-19, 2-89
1052030	2-19, 2-89
1052042	2-19, 2-89
1052043	2-19, 2-89
1052044	2-19, 2-89
1052045	2-19, 2-90
1052046	2-19, 2-89
1052047	2-19, 2-89
1052048	2-19, 2-89
1052049	2-19, 2-89
1052050	2-19, 2-89
1052051	2-19, 2-89
1052062	2-16, 2-17, 2-88
1052063	2-16, 2-17, 2-88
1052066	2-16, 2-17, 2-88
1052067	2-16, 2-17, 2-88
1052071	2-16, 2-17, 2-88, 2-89
1052072	2-16, 2-17, 2-88, 2-89
1052075	2-16, 2-17, 2-88, 2-89
1052076	2-16, 2-17, 2-88, 2-89
1052092	2-16, 2-17, 2-88, 2-89
1052097	2-16, 2-17, 2-88, 2-89
1052098	2-16, 2-17, 2-88, 2-89
1052149	2-16, 2-88
1052151	2-16, 2-88
1052152	2-16, 2-88
1052154	2-16, 2-88

Part No.	Page
1052155	2-16, 2-88
1052156	2-16, 2-89
1052157	2-16, 2-89
1052158	2-16, 2-89
1052159	2-16, 2-89
1052160	2-16, 2-89
1052161	2-16, 2-89
1052162	2-16, 2-89
1052163	2-16, 2-89
1052165	2-16, 2-89
1052166	2-16, 2-89
1052167	2-16, 2-89
1052168	2-16, 2-89
1052169	2-16, 2-89
1052170	2-16, 2-89
1052171	2-16, 2-88
1052173	2-16, 2-88
1052174	2-16, 2-88
1052176	2-16, 2-88
1052177	2-17, 2-88
1052178	2-17, 2-89
1052179	2-17, 2-88
1052181	2-17, 2-88
1052182	2-17, 2-88
1052184	2-17, 2-88
1052185	2-17, 2-88
1052186	2-17, 2-89
1052187	2-17, 2-89
1052188	2-17, 2-89
1052189	2-17, 2-89
1052190	2-17, 2-89
1052191	2-17, 2-89
1052192	2-17, 2-89
1052193	2-17, 2-89
1052194	2-17, 2-89
1052195	2-17, 2-89
1052196	2-17, 2-89
1052197	2-17, 2-89
1052198	2-17, 2-89
1052199	2-17, 2-89
1052201	2-17, 2-88
1052203	2-17, 2-88
1052204	2-17, 2-88
1052206	2-17, 2-89
1052207	2-17, 2-89
1052408	2-27, 2-91
1052409	2-27, 2-91
1052410	2-27, 2-91
1052411	2-27, 2-91
1052412	2-27, 2-91
1052413	2-27, 2-91
1052414	2-27, 2-91
1052415	2-27, 2-91
1052416	2-29, 2-91
1052417	2-29, 2-91
1052421	2-21, 2-90
1052422	2-21, 2-90
1052522	2-29, 2-91
1052523	2-29, 2-91
1052527	2-29, 2-91
1052528	2-29, 2-91
1052533	2-21, 2-90

Dimensions are shown for reference purposes only. Specifications subject to change.

Dimensions are in millimeters unless otherwise specified.

USA: +1 800 522 6752
Asia Pacific: +86 0 400 820 6015
UK: +44 800 267 666

For additional support numbers please visit www.te.com

Part Number Index (Continued)

Part No.	Page
1052534	2-21, 2-90
1052563	2-28, 2-91
1052565	2-27, 2-91
1052566	2-27, 2-91
1052577	2-27, 2-91
1052643	2-32, 2-92
1052646	2-32, 2-92
1052897	2-27, 2-91
1052898	2-27, 2-91
1052901	2-29, 2-91
1052902	2-29, 2-91
1052924	2-21, 2-90
1052926	2-21, 2-90
1052927	2-27, 2-91
1052928	2-27, 2-91
1052929	2-27, 2-91
1052930	2-27, 2-91
1052931	2-27, 2-91
1052932	2-27, 2-91
1052933	2-27, 2-91
1052934	2-27, 2-91
1052935	2-28, 2-91
1052936	2-28, 2-91
1052937	2-28, 2-91
1052938	2-28, 2-91
1052939	2-28, 2-91
1052940	2-28, 2-91
1052941	2-28, 2-91
1052942	2-28, 2-91
1052943	2-28, 2-91
1052944	2-28, 2-91
1052945	2-28, 2-91
1052946	2-28, 2-91
1052947	2-28, 2-91
1052948	2-28, 2-91
1052949	2-29, 2-91
1052950	2-29, 2-91
1052951	2-29, 2-91
1052952	2-29, 2-91
1052953	2-29, 2-91
1052954	2-29, 2-91
1052955	2-29, 2-91
1052956	2-29, 2-91
1052957	2-29, 2-91
1052958	2-29, 2-91
1052959	2-32, 2-92
1052961	2-32, 2-92
1052962	2-32, 2-92
1052963	2-32, 2-92
1053118	2-21, 2-90
1053133	2-21, 2-90
1053354	2-26, 2-91
1053372	2-26, 2-91
1053374	2-26, 2-91
1053376	2-26, 2-91
1053378	2-26, 2-91
1053396	2-26, 2-91
1053398	2-26, 2-91
1053400	2-26, 2-91
1053415	2-30, 2-91
1053422	2-30, 2-91
1053423	2-30, 2-91

Part No.	Page
1053424	2-30, 2-91
1053425	2-30, 2-91
1053428	2-30, 2-91
1053429	2-30, 2-91
1053430	2-30, 2-91
1053431	2-30, 2-91
1053438	2-30, 2-91
1053450	2-30, 2-91
1053451	2-30, 2-91
1053452	2-30, 2-92
1053453	2-30, 2-91
1053465	2-31, 2-92
1053467	2-31, 2-92
1053475	2-31, 2-92
1053476	2-31, 2-92
1053477	2-31, 2-92
1053478	2-31, 2-92
1053479	2-31, 2-92
1053480	2-31, 2-92
1053481	2-31, 2-92
1053482	2-31, 2-92
1053488	2-26, 2-91
1053489	2-26, 2-91
1053633	2-26, 2-91
1053634	2-26, 2-91
1053635	2-26, 2-91
1053765	2-91
1053767	2-26, 2-91
1054874	2-26, 2-91
1054875	2-26, 2-91
1054986	2-26, 2-91
1054988	2-26, 2-91
1055064	2-26, 2-91
1055065	2-26, 2-91
1055091	2-26, 2-91
1055236	2-4
1055420	2-4
1055835	2-4
1056413	2-14, 2-88
1056521	2-41, 2-92
1056522	2-41, 2-92
1056550	2-41, 2-92
1056551	2-41, 2-92
1056702	2-43
1056703	2-41, 2-92
1056706	2-43
1056707	2-43
1056708	2-43
1056726	2-42
1056728	2-43
1056734	2-42
1056736	2-42
1056740	2-41
1056741	2-41
1056742	2-41
1056743	2-41
1056744	2-41
1056745	2-41
1056750	2-42
1056751	2-42
1056752	2-42
1057088	2-6

Part No.	Page
1057094	2-6
1057116	2-6
1057138	2-6
1057140	2-6
1057159	2-6
1057165	2-6
1057176	2-6
1057178	2-6
1057275	2-6
1057279	2-6
1057284	2-6
1057290	2-6
1057293	2-6
1057354	2-34, 2-92
1057357	2-34, 2-92
1057359	2-34, 2-92
1057371	2-33, 2-92
1057402	2-34, 2-92
1057403	2-92
1057465	2-34, 2-92
1057631	2-10
1057635	2-10
1057679	2-10
1057697	2-10
1057699	2-10
1057775	2-10
1057780	2-10
1057848	2-33, 2-92
1058572	2-56
1058590	2-90
1058628	2-6
1058955	2-64
1058990	2-64
1058993	2-64
1059057	2-64
1059060	2-64
1059081	2-64
1059399	2-55
1059402	2-51, 2-53
1059404	2-51, 2-53
1059408	2-55
1059410	2-51, 2-53
1059412	2-51, 2-53
1059451	2-55
1059452	2-55
1059453	2-53
1059456	2-53
1059465	2-54
1059467	2-54
1059505	2-54
1059506	2-54
1059523	2-56
1059540	2-56
1059541	2-56
1059551	2-56
1059572	2-61
1059596	2-57
1059617	2-58
1059632	2-60
1059637	2-60
1059651	2-58
1059654	2-58

Part No.	Page
1059657	2-58
1059665	2-60
1059681	2-59
1059684	2-59
1059691	2-59
1059868	2-46
1059874	2-46
1059886	2-47
1059887	2-47
1059888	2-47
1059889	2-48
1059901	2-48
1059902	2-49
1059903	2-48
1059905	2-49
1059919	2-48
1080294	2-33, 2-92
1083993	2-20, 2-90
1086451	2-75
1086723	2-17, 2-89
1087842	2-20, 2-90
1087843	2-19, 2-89, 2-90
1087866	2-34, 2-92
1089686	2-22, 2-90
1218039	4-62
1218040	4-62
1218041	4-62
1218042	4-62
1218044	4-38
1218045	4-62
1218046	4-62
1218080	4-62
1218081	9-50
1218101	4-62
1218124	8-47, 8-100
1218125	8-47, 8-100
1218126	8-47, 8-100
1218127	8-47, 8-101
1218128	8-62
1218129	8-62
1218133	4-62
1218145	4-62
1218146	4-62
1218147	9-47
1218148	9-47
1218155	4-62
1218159	4-63
1218176	4-62
1218182	4-62
1218201	4-63
1218202	4-63
1218203	4-63
1218205	4-62
1218206	4-63
1218207	4-63
1218214	4-63
1218224	4-63
1218225	4-63
1218226	4-62
1218227	4-63
1218228	4-62
1218229	4-62

Part Number Index (Continued)

Part No.	Page
1218230	4-62
1218232	8-83, 8-86
1218233	8-83, 8-86
1218234	8-82, 8-86
1218235	8-82, 8-86
1218236	4-62
1218237	4-62
1218239	4-62
1218266	8-38
1218267	8-38
1218289	8-49
1218290	8-49
1218291	8-49
1218292	8-49
1218293	8-49
1218294	8-49
1218297	4-63
1218299	4-62
1218300	4-63
1218342	4-62, 4-63
1218343	4-63
1218348	4-63
1218349	4-63
1218350	4-62
1218352	4-63
1218353	4-63
1218354	4-63
1218356	4-63
1218358	4-63
1218361	4-62
1218363	4-62
1218368	4-62
1218374	8-49
1218375	8-49
1218377	8-49
1218378	8-49
1218379	8-49
1218380	8-49
1218381	8-49
1218385	8-63
1218401	4-62
1218402	4-63
1218404	4-62
1218408	8-52, 8-100
1218434	8-52, 8-100
1218435	8-52, 8-100
1218436	8-52, 8-100
1218437	8-52, 8-100
1218438	8-52, 8-100
1218440	8-51, 8-101
1218441	8-51, 8-101
1218442	8-51, 8-101
1218443	8-101
1218444	8-51, 8-101
1218445	8-51, 8-101
1218473	4-62
1218476	4-62
1218479	4-62
1218483	8-63
1218490	4-62
1218528	4-62
1218538	8-56

Part No.	Page
1218606	8-56
1218607	8-57
1218611	8-62
1218619	4-62
1218637	4-62
1218638	4-62
1218639	4-62
1218654	8-60, 8-61
1218655	8-60, 8-61
1218656	4-62
1218665	8-57
1218687	4-25
1218689	4-25
1218692	4-15
1218693	4-15
1218699	8-68
1218706	4-62
1218713	4-23
1218720	4-62
1218723	4-63
1218724	4-62
1218735	4-62
1218745	4-62
1218746	8-70
1218747	8-72
1218748	8-43
1218749	8-43
1218756	4-62
1218807	8-62
1218814	4-62
1218816	8-62
1218820	4-25
1218821	4-25
1218826	8-49
1218827	8-49
1218829	8-49
1218830	8-53
1218831	8-53
1218832	8-53
1218833	8-53
1218834	8-53
1218835	8-53
1218837	8-53
1218838	8-53
1218839	8-53
1218840	8-53
1218841	8-53
1218842	8-55
1218843	8-55
1218844	8-55
1218845	8-55
1218846	8-55
1218847	8-55
1218848	8-55
1218849	8-55
1218850	8-55
1218852	8-55
1218854	8-55
1218855	8-55
1218856	8-55
1218857	8-55
1218858	8-55

Part No.	Page
1218859	8-55
1218867	4-36
1218876	4-62
1218887	8-62
1218894	4-63
1218895	4-63
1218896	8-62
1218919	4-62
1218934	4-62
1218939	8-62
1218957	4-63
1218958	4-63
1218959	4-63
1218960	4-63
1221162	2-24, 2-92
1221165	2-20, 2-90
1251095	2-28, 2-91
1252992	2-34, 2-92
1253627	2-20, 2-90
1254028	2-19, 2-89
1255511	2-46
1278531	3-33
1278540	3-33
1278637	3-33
1329846	2-57
1331293	2-20, 2-90
1362216	2-20, 2-90
1374484	3-33
1374759	3-5, 3-16, 3-26, 3-28
1410140	1-4, 1-5
1410142	1-4, 1-5
1410186	1-4, 1-5
1410187	1-4
1410189	1-4
1410190	1-4, 1-5
1410956	1-5
1410964	1-5
1410965	1-5
1410966	1-5
1410968	1-5
1410970	1-5
1410971	1-5
1410972	1-5
1410975	1-5
1445162	3-27, 8-21, 8-26
1445163	3-27, 8-21, 8-26
1445626	6-16, 6-17
1445692	6-16, 6-17, 8-29
1445693	6-16, 6-17, 8-29
1466018	5-62
1469491	1-4, 1-8
1469492	1-4, 1-5, 1-8
1484014	4-63
1484033	4-62
1484148	4-62
1484157	4-62
1484158	4-62
1484240	4-63
1484241	4-63
1484406	6-20
1484407	6-20
1484499	2-19, 2-89

Part No.	Page
1484500	2-19, 2-89
1484501	2-19, 2-89
1484502	2-19, 2-89
1484503	2-19, 2-89
1484504	2-19, 2-89
1484505	2-19, 2-89
1484506	2-19, 2-90
1484507	2-19, 2-90
1484516	2-21, 2-90
1484517	2-91
1484518	2-32, 2-92
1484519	2-32, 2-92
1484520	2-32, 2-92
1484521	2-32, 2-92
1484522	2-32, 2-92
1484523	2-32, 2-92
1484524	2-32, 2-92
1484525	2-32, 2-92
1484542	2-20, 2-90
1484543	2-20, 2-90
1484546	2-48
1484620	6-20
1484621	6-20
1495164	5-62
1515734	3-13
1515735	3-13
1515739	3-10
1515740	3-10
1515743	3-10
1515747	3-10
1515787	3-11
1515867	3-11
1515868	3-11
1515940	3-13
1515941	3-13
1516040	3-10
1516041	3-10
1516228	3-5, 3-16
1516229	3-13
1516256	3-13, 3-16
1516338	3-16
1516340	3-16
1516342	3-16
1516343	3-16
1516344	3-16
1516506	3-10
1516516	3-21
1516546	3-4
1516547	3-4
1516548	3-4
1516702	3-4
1516703	3-4
1516704	3-4
1532137	5-62, 5-61
1534805	8-96
1534806	8-96
1534807	8-96
1534808	8-96
1534809	8-96
1534810	8-96
1534811	8-96
1534812	8-96

Catalog 1308940
Revised 9-14

www.te.com

Dimensions are shown for reference purposes only. Specifications subject to change.

Dimensions are in millimeters unless otherwise specified.

USA: +1 800 522 6752
Asia Pacific: +86 0 400 820 6015
UK: +44 800 267 666

For additional support numbers please visit www.te.com

Part Number Index (Continued)

Part No.	Page
1577616	10-20
1577617	10-20
1577618	10-20
1577619	10-20
1577620	10-20
1577621	10-20
1577622	10-20
1577623	10-20
1577624	10-20
1577625	10-20
1577626	10-20
1577627	10-20
1577628	10-20
1577629	10-20
1577630	10-20
1577631	10-20
1577632	10-20
1577633	10-20
1577634	10-20
1577635	10-20
1577636	10-20
1577637	10-20
1577638	10-20
1577639	10-20
1577640	10-20
1577641	10-20
1577642	10-20
1577643	10-20
1577644	10-20
1577645	10-20
1577646	10-20
1577647	10-20
1577648	10-20
1577649	10-20
1577650	10-20
1588128	3-5, 3-16
1588129	3-5
1588129	3-16
1588700	3-10, 3-11
1588801	3-13
1588839	3-26, 3-28
1588908	3-10, 3-11
1588957	3-20
1589050	5-33, 5-43
1589051	5-29, 5-43
1589052	5-29, 5-43
1589053	5-30, 5-43
1589054	5-30, 5-43
1589055	7-26
1589056	7-32
1589057	7-26
1589058	7-32
1589059	7-27
1589060	7-40
1589061	7-40
1589062	7-41
1589063	7-34
1589064	7-34
1589065	7-35
1589066	5-27, 5-43
1589067	5-28, 5-43
1589068	2-101

Part No.	Page
1589069	2-101
1589070	2-101
1589071	2-101
1589072	2-101
1589448	5-45, 5-50
1589449	5-45, 5-50
1589450	5-50
1589451	5-47, 5-50
1589452	5-47, 5-50
1589453	5-48, 5-50
1589454	5-48, 5-50
1589455	5-7, 5-35
1589456	5-35, 5-36
1589457	5-7, 5-35, 5-36
1589460	5-15, 5-40, 5-41
1589461	5-24, 5-42
1589462	5-40, 5-41
1589463	5-17, 5-40, 5-41
1589464	5-17, 5-40, 5-41
1589465	5-17, 5-41
1589466	5-18, 5-40, 5-41
1589467	5-19, 5-40, 5-41
1589468	5-40, 5-41
1589469	5-22, 5-42
1589470	5-24, 5-42
1589471	5-22, 5-42
1589472	5-8, 5-36, 5-37
1589473	5-37, 5-38
1589474	5-38, 5-39
1589475	5-36 to 5-39
1589476	5-8, 5-36 to 5-38
1589477	5-36, 5-38, 5-39
1589480	5-41, 5-42
1589481	5-23, 5-42, 5-43
1589482	5-25, 5-42, 5-43
1589483	5-16, 5-41, 5-42
1589484	5-20, 5-41, 5-42
1589485	5-20, 5-41, 5-42
1589486	5-21, 5-41, 5-42
1589487	5-23, 5-42, 5-43
1589488	5-25, 5-42, 5-43
1589489	5-42, 5-43
1589490	5-16, 5-41, 5-42
1589671	5-39
1589672	5-39
1589673	5-39, 5-40
1589674	5-40
1589675	5-40
1589676	5-40
1589683	5-50
1589685	7-42
1589686	7-36
1589687	7-42
1589688	7-36
1589690	7-33
1589691	7-28
1589692	7-28
1589693	7-29
1589694	7-37
1589695	7-43
1589699	5-39, 5-40
1589700	5-40, 5-41

Part No.	Page
1589729	5-39
1589735	5-10, 5-39
1589736	5-10, 5-39
1589737	5-12, 5-39, 5-40
1589738	5-12, 5-39, 5-40
1589775	5-50
1589777	5-36, 5-37, 5-38, 5-39
1589788	5-36, 5-37, 5-38, 5-39
1589797	5-39
1589798	5-40
1589799	5-39
1589803	5-11, 5-39
1589804	5-13, 5-40
1589813	5-41, 5-42
1589814	5-41
1589817	5-41
1589819	5-40
1589827	5-35, 5-36
1589851	5-32, 5-43
1589901	5-35, 5-36
1589902	5-41
1589953	7-44
1589954	7-44
1589955	7-44
1604798	6-22, 6-23
1604799	6-22, 6-23
1604800	6-22, 6-23
1604874	6-22
1604896	6-22
1604897	6-22
1604898	6-22
1604905	6-22
1604940	6-17
1604972	6-24
1663018	6-20
1663019	6-20
1663032	6-20
1663433	2-36
1663434	2-36
1663572	2-59
1663670	2-43
1663678	2-42
1663679	2-42
1663900	6-20
1693001	3-13
1693741	3-10
1693797	3-11
1693800	3-11
1693808	3-20
1738007	8-32
1738008	8-32
1738017	8-32
1738018	8-32
1738049	8-17
1738050	8-17
1738051	8-17
1738052	8-17
1738053	8-17
1738054	8-17
1738055	8-17
1738056	8-17
1738057	8-17

Part No.	Page
1738058	8-17
1738059	8-17
1738060	8-17
1738061	8-17
1738062	8-17
1738063	8-17
1738064	8-17
1738065	8-17
1738066	8-17
1738067	8-17
1738068	8-17
1738069	8-17
1738070	8-17
1738071	8-17
1738072	8-17
1738073	8-17
1738074	8-17
1738075	8-17
1738076	8-17
1738077	8-17
1738078	8-17
1738079	8-17
1738080	8-17
1738081	8-17
1738082	8-17
1738083	8-17
1738084	8-17
1738085	8-18
1738086	8-18
1738087	8-18
1738088	8-18
1738089	8-18
1738090	8-18
1738091	8-18
1738092	8-18
1738093	8-18
1738094	8-18
1738095	8-18
1738096	8-18
1738099	8-18
1738101	8-18, 8-32
1738104	8-18, 8-32
1738106	8-18
1738107	8-18
1738108	8-18
1738109	8-18
1738110	8-18
1738111	8-18
1738112	8-18
1738113	8-18
1738114	8-18
1738115	8-18
1738116	8-19
1738117	8-19
1738118	8-19
1738119	8-19
1738120	8-19
1738121	8-19
1738122	8-19
1738123	8-19
1738124	8-19
1738125	8-19

Part Number Index (Continued)

Part No.	Page
1738126	8-19
1738127	8-19
1738128	8-19
1738129	8-19
1738130	8-19
1738131	8-19
1738132	8-19
1738133	8-19
1738134	8-19
1738135	8-19
1738136	8-19
1738137	8-19
1738138	8-19
1738139	8-19
1738140	8-19
1738141	8-19
1738142	8-19
1738143	8-19
1738144	8-19
1738145	8-19
1738146	8-19
1738149	8-19
1738151	8-19
1738154	8-19
1738156	8-20
1738157	8-20
1738158	8-20
1738159	8-20
1738160	8-20
1738161	8-20
1738162	8-20
1738163	8-20
1738164	8-20
1738165	8-20
1738166	8-20
1738167	8-20
1738168	8-20
1738169	8-20
1738170	8-20
1738171	8-20
1738172	8-20
1738173	8-20
1738174	8-20
1738175	8-20
1738176	8-20
1738177	8-20
1738178	8-20
1738179	8-20
1738180	8-20
1738181	8-20
1738182	8-20
1738183	8-20
1738184	8-20
1738185	8-20
1738186	8-20
1738189	8-20
1738191	8-20
1738194	8-20
1738199	8-30
1738200	8-30
1738201	8-30
1738203	8-30

Part No.	Page
1738204	8-30
1738205	8-30
1738206	8-30
1738207	8-30
1738208	8-30
1738209	8-30
1738210	8-30
1738211	8-30, 8-32
1738212	8-30, 8-32
1738213	8-30
1738214	8-30
1738228	8-7
1738229	8-7
1738230	8-7
1738231	8-7
1738232	8-7
1738233	8-7
1738234	8-7
1738235	8-7
1738236	8-9
1738237	8-9
1738238	8-9
1738239	8-9
1738240	8-9
1738241	8-9
1738242	8-9
1738243	8-9
1738244	8-12
1738245	8-12
1738246	8-12
1738247	8-12
1738248	8-12
1738249	8-12
1738250	8-12
1738251	8-12
1738252	8-12
1738253	8-12
1738254	8-12
1738255	8-12
1738256	8-12
1738257	8-12
1738258	8-12
1738259	8-12
1738260	8-12
1738261	8-12
1738262	8-12
1738263	8-12
1738264	8-12
1738265	8-12
1738266	8-12
1738267	8-12
1738268	8-12
1738269	8-12
1738270	8-12
1738271	8-12
1738272	8-12
1738273	8-12
1738274	8-12
1738275	8-12
1738276	8-12
1738277	8-12
1738278	8-12

Part No.	Page
1738279	8-12
1738280	8-12
1738281	8-12
1738282	8-12
1738283	8-12
1738284	8-12
1738285	8-12
1738286	8-12
1738287	8-12
1738288	8-12
1738289	8-12
1738290	8-12
1738291	8-12
1738292	8-12
1738293	8-12
1738294	8-12
1738295	8-12
1738296	8-12
1738297	8-12
1738298	8-12
1738299	8-13
1738300	8-13
1738301	8-13
1738302	8-13
1738303	8-13
1738304	8-13
1738305	8-13
1738306	8-13
1738307	8-13
1738308	8-13
1738310	8-31
1738311	8-31
1738312	8-31
1738313	8-31, 8-32
1738314	8-31
1738315	8-31
1738316	8-31
1738317	8-31
1738318	8-31
1738319	8-31
1738327	8-28
1738331	8-28
1738332	8-28
1738333	8-28
1738338	8-28
1738400	8-30
1738428	8-30
1738429	8-30
1738440	8-30
1738805	8-21, 8-24
1738806	8-21, 8-24
1738807	8-21, 8-24
1738808	8-21, 8-24
1738916	6-26
1738949	6-22, 6-23
1738950	6-22, 6-23
1738951	6-22, 6-23
1738955	6-22
1738960	8-27
1738969	8-27
1738974	6-26, 6-28
1754074	3-33

Part No.	Page
1754122	3-11
1754371	3-56
1754439	3-10
1754445	3-10
1754447	3-10
1754515	3-18
1754516	3-19
1754517	3-19
1754622	3-26, 3-28
1754699	3-5, 3-16, 3-26, 3-28
1754700	3-5, 3-16, 3-26, 3-28
1754708	3-33
1754765	3-33
1754767	3-33
1754842	3-13
1754843	3-13
1754844	3-13
1757023	2-41, 2-92
1757024	2-41
1757025	2-41
1757026	2-41
1757027	2-41
1757028	2-41
1757029	2-41
1757030	2-41
1757180	4-23
1757203	4-23
1757207	8-76
1757253	2-36
1757256	2-36
1757257	2-36
1757492	4-23
1757624	4-25
1757638	2-36
1757639	2-36
1757640	2-36
1757642	2-36
1757643	2-36
1757644	2-36
1757669	4-23
1757710	3-30, 4-14, 8-24
1757711	3-30, 4-14, 8-24
1757727	3-30, 4-14, 8-24
1757819	8-42
1757820	8-42
1757821	8-42
1757822	8-42
1757823	8-71
1757824	8-73
1757825	8-71
1757826	8-73
1757827	8-47
1757828	8-47
1757829	8-47
1757830	8-47
1757831	8-47
1757832	8-47
1757833	8-47
1757834	8-47
1757835	8-51
1757836	8-52
1757837	8-51

Catalog 1308940
Revised 9-14

www.te.com

Dimensions are shown for reference purposes only. Specifications subject to change.

Dimensions are in millimeters unless otherwise specified.

USA: +1 800 522 6752
Asia Pacific: +86 0 400 820 6015
UK: +44 800 267 666

For additional support numbers please visit www.te.com

Part Number Index (Continued)

Part No.	Page
1757838	8-52
1757839	8-51
1757840	8-52
1757841	8-51
1757842	8-52
1757843	8-51
1757844	8-52
1757845	8-51
1757846	8-52
1757859	4-23
1757891	4-25
1757892	4-24
1811010	6-16
1811119	8-32
1811121	8-21, 8-32
1811122	8-21, 8-32
1811184	6-26, 6-27
1811269	6-16
1811481	6-19
1811633	6-19
1811646	8-15
1811648	8-15
1811650	8-15, 8-31
1811680	8-9
1811865	6-16, 6-18, 8-29, 8-32
1811866	6-18, 8-29, 8-32
1811892	8-15
1811894	8-15
1811901	6-26, 6-29
1811902	6-26, 6-28
1811927	6-26, 6-30
1811928	6-26, 6-30
1811943	6-19
1828199	3-30, 3-31, 4-14, 8-24, 8-29
1828200	3-30, 3-31, 4-14, 8-24, 8-29
1828335	3-18, 3-33
1828349	3-33
1828350	3-33
1828352	3-23, 3-33
1828353	3-23, 3-33
1828355	3-33
1828465	3-33
1828536	3-18
1828573	3-57
1828574	3-57
1828618	3-53
1828619	3-53
1828644	3-33
1828650	3-11, 3-18
1828698	3-5
1828699	3-5
1828700	3-5
1828740	3-53
1828826	3-5
1828889	3-33
1828935	3-53
1828979	3-30
1828980	3-30
1828995	3-30
1828996	3-30
1828997	3-30

Part No.	Page
1877039	6-16, 8-29
1877040	6-16, 8-29
1877070	8-32
1877328	8-30
1877329	8-30
1877384	6-26
1877519	8-27
1877567	8-21
1877568	8-21
1877626	8-29
1877646	8-32
1877652	8-32
1877694	8-21
1877696	8-21
1877698	8-21
1877700	8-21
1877702	8-21
1877704	8-21
1877706	8-21
1877708	8-21
1877719	8-15
1877720	8-15
1877732	6-26, 6-28
1877736	8-31
1877774	6-26, 6-27
1877775	6-26, 6-27
1877888	8-31
1877921	6-26, 6-29
1877943	8-9
1877945	8-9
1877985	8-30
1877986	8-30
1883005	8-82
1883006	8-82
1883007	8-83
1883008	8-83
1883053	8-84
1883054	8-84
1883055	8-85
1883056	8-85
1883057	8-85
1883630	8-64
1918016	3-22
1918024	3-16
1918025	3-16
1918082	3-22
1918153	3-56
1918154	3-57
1918177	3-53
1918185	3-5
1918222	3-33
1918223	3-33
1918227	3-57
1918228	3-56
1918497	3-11
1918498	3-11
1918509	3-33
1918510	3-33
1918511	3-33
1918603	3-5
1918614	3-30, 3-31, 4-14, 8-24, 8-29

Part No.	Page
1918615	3-30, 3-31, 4-14, 8-24, 8-29
1918616	3-30, 3-31, 4-14, 8-24, 8-29
1918617	3-30, 3-31, 4-14, 8-24, 8-29
1918808	3-33
1918810	3-33
1918834	3-33
1918881	3-33
1918883	3-16
1918884	3-16
1918885	3-16
1918887	3-33
1918930	3-18
1918931	3-10
1918932	3-10
1918933	3-10
1918934	3-10
1918937	3-10
1918939	3-10
1918940	3-10
1918941	3-10
1918943	3-10
1925026	7-30
1925027	7-30
1925028	7-31
1925029	7-38
1925030	7-38
1925031	7-39
1925248	6-10, 6-11
1925249	6-10
1925250	6-10
1925251	6-10, 6-11
1925252	6-10
1925253	6-10
1925254	6-10, 6-11
1925255	6-10
1925256	6-10
1925257	6-10
1925258	6-10, 6-12
1925259	6-10
1925260	6-10
1925261	6-10, 6-12
1950030	6-24
1954043	8-17
1954044	8-17
1954046	8-29, 8-32
1954067	8-21
1954284	8-9
1954285	8-9
1954321	8-18
1954322	8-18
1954325	8-18
1954326	8-18
1954327	8-18
1954328	8-18
1954329	8-18
1954330	8-18
1954331	8-18
1954332	8-18
1954333	8-18

Part No.	Page
1954334	8-18
1954335	8-18
1954336	8-18
1954337	8-18
1954338	8-18
1954339	8-18
1954340	8-18
1954341	8-19
1954342	8-19
1954344	8-19
1954345	8-19
1954346	8-19
1954347	8-19
1954348	8-19
1954349	8-19
1954350	8-19
1954353	6-26, 6-29
1954355	6-26, 6-29
1954573	8-27
1954576	6-16, 6-18
1954577	6-26, 6-30
1954723	8-19
1954724	8-18
1954739	8-18
1985006	3-22
1985021	3-16
1985107	3-13, 3-16
1985140	3-5
1985162	3-59
1985319	3-11
1985335	3-30
1985368	3-60
1985635	3-13, 3-16
1985801	3-60
1985915	3-10
1996328	2-36
1996373	6-24
1996390	2-38
1996453	8-29
1996454	8-29
1996481	8-29
1996487	8-33
1996488	8-33
1996500	6-36
1996544	6-24
1996705	2-38
1996706	2-38
1996771	2-38
1996883	2-38
1996884	2-38
2000108	8-21
2000126	8-19
2000142	8-9
2000143	8-21
2000189	3-27, 8-21, 8-26
2000190	3-27, 8-21, 8-26
2000263	6-25
2000314	6-25
2000317	6-25
2000676	1-4, 1-8
2000677	1-8
2000713	1-4, 1-5, 1-8

Part Number Index (Continued)

Part No.	Page
2000856	8-21, 8-24
2000857	8-21, 8-24
2000858	8-21, 8-24
2000859	8-21, 8-24
2000860	8-21, 8-24
2000861	8-21, 8-24
2000862	8-21, 8-24
2000863	8-21, 8-24
2000890	1-8
2000891	1-7, 1-8
2000892	1-8
2000895	1-8
2000896	1-7, 1-8
2000903	1-8
2000905	1-8
2000973	3-40, 3-54
2000974	3-40, 3-54
202A111	7-17
202A121	7-17
202A132	7-17
2033989	8-21
2033990	8-19
2033995	8-19
2033996	8-19
2033997	8-21
2033998	8-21
2064163	3-16
2064166	3-16
2064556	3-4
2064557	3-4
2064558	3-4
2064559	3-4
2064560	3-4
2064561	3-4
2064562	3-4
2064563	3-4
2064564	3-4
2064565	3-4
2064566	3-4
2064567	3-4
2064757	3-58
2064764	3-58, 3-60
2101395	6-26, 6-30
2101549	7-18
2101550	7-18
2101551	7-18
2101553	7-18
2101579	7-17
2101580	7-17
2101676	7-18
2101677	7-18
2101752	6-24
2102060	1-10
2102061	1-10
2102077	1-8
2102079	1-10
2102080	1-10
2102081	1-8
2102086	1-8
2102087	1-8
2102088	1-8
2102092	1-8

Part No.	Page
2102093	1-8
2102094	1-8
2102096	1-8
2102098	1-8
2102114	1-8
2102155	1-8
2102157	1-8
2102159	1-8
2102161	1-8
2102227	8-20
2102228	8-20
2102229	8-20
2102230	8-20
2102232	1-8
2102234	1-8
2102247	1-8
2102248	1-8
2102314	1-8
2102315	1-8
2102316	1-8
2102317	1-8
2102318	1-8
2102319	1-8
2102320	1-8
2102343	6-4, 6-5
2102349	6-5
2102350	6-5
2102351	6-4, 6-5
2102352	6-4, 6-5
2102353	6-4, 6-5
2102429	1-10
2102430	1-10
2102453	6-4, 6-5
2102515	1-8
2102516	1-8
2102735	1-4, 1-5
2102736	1-4, 1-5
2102737	1-4, 1-5
2102768	1-5
2102771	1-4
2102772	1-4
2102773	1-5
2102774	1-5
2102775	1-5
2102847	1-4, 1-5
2102848	1-5
2102849	1-5
2102850	1-5
2102851	1-5
2102866	3-54
2123265	3-56
2123524	3-56
2157014	7-17
2157015	7-17
2157322	6-24
2157342	7-18
2157343	7-18
2157344	7-18
2157375	7-18
2157376	7-18
2157455	6-26, 6-28
2157468	7-18

Part No.	Page
2157469	7-18
2157538	7-18
2157539	7-18
2157628	6-30
2157694	6-26, 6-27
2157695	6-26, 6-28
2157696	6-26, 6-29
2157738	7-18
2157739	7-18
2157927	7-17
2157928	7-17
2157929	7-17
2157930	7-17
2157945	7-18
2157946	7-18
2157947	7-18
2157948	7-18
2157949	7-18
2157950	7-18
2157951	7-18
2157952	7-18
2174191	7-20
2174192	7-20
2174193	7-20
2174194	7-20
2174195	7-20
2174196	7-20
2174197	7-20
2174198	7-20
2174199	7-20
2174201	7-20
2174202	7-20
2174205	7-20
2174206	7-20
2174208	7-20
2174209	7-20
2174210	7-20
2174211	7-20
2174212	7-20
2174213	7-20
2174214	7-20
2174215	7-20
2174216	7-20
2174217	7-20
2174218	7-20
2174219	7-20
2174220	7-20
2174221	7-20
2174222	7-20
2174223	7-20
2174224	7-20
2174225	7-20
2174226	7-20
2174227	7-20
2201010	7-24
2201011	7-24
2201012	7-24
2201013	7-24
2201014	7-24
2201015	7-24
2201481	7-20
2201482	7-20

Part No.	Page
2221478	6-5
2201712	7-20
2201713	7-20
2221682	6-5
2226127	1-5
2229015	7-24
5205817	8-93
5205818	8-93
5205933	8-95
5205980	8-94
5207871	8-94
5207872	8-93
5225395	2-8
5225396	2-8
5225398	2-8
5225554	2-10
5225555	2-10
5225557	2-10
5225559	2-10
5225974	2-8
5745136	8-94
5747404	8-93
5747877	8-93
5748270	8-93
5748271	8-93
5748558	8-93
5749765	8-93
5830637	9-17
5849587	9-20
6374613	3-33
6374615	3-33
6754475	3-18
6754518	3-16
6754519	3-16
6754520	3-16
6828094	3-56
6828095	3-56
6828099	3-57
6828100	3-57
6828129	3-56
6828130	3-56
6828413	3-10
6828454	3-18
456099SM	3-52
1726A1424	8-32
A6*	4-41
BND*	6-7
CEC-RWC*	6-32 to 6-35
CHA*	8-123, 8-127, 8-138
CTA*	8-120, 8-123, 8-125, 8-127, 8-134, 8-137
CX*	2-96, 2-98, 2-100
D-150*	11-5
D-600*	11-5
D-602*	8-120, 8-125
D-621*	11-5 to 11-8
D-659*	8-138
DK-3716*	11-8
DK-602*	11-9
DK-621*	11-2, 11-3, 11-4, 11-6, 11-7
GPRA*	8-7, 8-8, 8-16, 8-17, 8-22, 8-30

Catalog 1308940
Revised 9-14

www.te.com

Dimensions are shown for reference purposes only. Specifications subject to change.

Dimensions are in millimeters unless otherwise specified.

USA: +1 800 522 6752
Asia Pacific: +86 0 400 820 6015
UK: +44 800 267 666

For additional support numbers please visit www.te.com

Part Number Index (Continued)

Part No.	Page
GPRA1*	8-5
GPRB*	8-9, 8-11 to 8-16, 8-18 to 8-21, 8-23, 8-26, 8-30 to 8-33
GPRB*	8-11
GPRB1	8-5
GPRB2	8-5
HDSM*	5-100
HET*	4-74
HEX07*	4-74
HEXA6*	4-74
HEXDB*	4-74
HEXYY*	4-73
J*	5-14
JS*	5-39

Part No.	Page
JT*	5-39
JT*	5-40
M6*	4-39
MC3*	3-39
MC4*	3-41
MC5*	3-45
MC6*	3-48
MCD*	5-54, 5-58, 5-59, 5-73, 5-75
MCDM1*	5-73
MCDM3*	5-75
MCDR3*	5-79, 5-80, 5-81
MCE*	5-87
MCEM*	5-90

Part No.	Page
MCJ*	5-93
MCJM*	5-95
MCK*	5-54, 5-56, 5-63, 5-64, 5-66, 5-67, 5-70, 5-81, 5-82
MCKS*	5-78, 5-79
MCS*	5-96
MCSAR*	5-96
MTC*	8-122, 8-128, 8-129, 8-139
MTCP*	8-118 to 8-120, 8-134
MTCR*	8-125
MTCTQ*	8-135, 8-136
NIC66*	4-5
NIC66S*	4-28

Part No.	Page
P*	5-34
PT*	5-43
QCM*	7-46
RBD*	2-79
RME*	4-46
RSC*	3-52
RSC07HE*	3-52
RSC30E	3-52
RSC40E	3-52
RTD*	2-80, 2-81
S*	5-9, 5-26, 5-28, 5-31
SS*	5-35, 5-36, 5-40 to 5-43
ST*	5-36 to 5-39, 5-41 to 5-43
USS*	5-50, 5-46

Military Part Number Index

Note: This index lists all cataloged parts by base no. only. Complete part nos. (with prefixes and/or suffixes) are shown on the page(s) indicated.

Part No.	Page
21097	1-100 to 1-103, 1-105
530745	1-13
AF8627286	2-22
AS39029	8-37, 8-38, 8-68
M21097	1-106
M2252	6-13
M22520	2-82, 4-19, 4-23, 4-24, 4-25, 4-34, 6-3, 6-13, 6-20, 8-28, 8-74, 8-75, 8-87
M24308	8-38, 8-41, 8-42, 8-47, 8-51, 8-52, 8-68, 8-70 to 8-73, 8-94, 8-97 to 8-101
M29504	3-2, 3-3, 3-17

Part No.	Page
M39012	2-6, 2-18 to 2-26, 2-88 to 2-91
M39029	4-53, 4-54, 8-38, 8-68, 8-160
M55302	1-27, 1-56, 1-77, 1-78,
M55339	2-26, 2-91
M7928	10-5, 10-32, 10-33, 10-34, 10-36, 10-38, 10-39, 10-40
M81714	8-161, 8-162, 8-164 to 8-167, 8-173 to 8-179
M81969	1-78, 3-30, 8-28, 8-29, 8-38 to 8-40, 8-44, 8-45, 8-68, 8-69, 8-74, 8-75, 8-87, 8-160
M83513	5-61, 5-66, 5-78, 5-79, 5-80, 5-81, 5-82
M83517	2-27 to 2-32, 2-91, 2-92
M83526	3-2, 3-4

Part No.	Page
MIL-A-55339	2-26
MIL-C-21097	1-11, 1-99
MIL-C-22520	2-84, 4-34
MIL-C-24308	8-40
MIL-C-34029	4-45
MIL-C-38999	3-3, 3-36, 3-42, 3-46, 9-37
MIL-C-39012	2-63
MIL-C-39029	4-40, 4-53, 4-54, 8-37, 8-39, 8-67, 8-69, 8-125
MIL-C-55302	1-11 to 1-17, 1-22, 1-23, 1-28, 1-29, 1-38 to 1-42, 1-45 to 1-58, 1-60 to 1-63, 1-66, 1-68, 1-77, 1-78, 1-91 to 1-98
MIL-C-55339	2-4
MIL-C-81659	4-45, 4-64 to 4-70

Part No.	Page
MIL-C-83517	2-4, 2-27 to 2-32
MIL-C-85049	4-71
MIL-E-5400	1-11
MIL-M-24519	1-40, 1-51, 1-13, 1-14, 1-16, 1-17, 1-28 to 1-31, 1-33 to 1-35, 1-40, 1-43, 1-49, 1-50, 1-52 to 1-56, 1-58, 1-60, 1-61, 1-63 to 1-66, 1-68, 1-92, 1-95, 1-98
MIL-PRF-39012	2-4 to 2-26, 2-37, 2-76
MIL-PRF-85045	3-20, 3-56, 3-57
MIL-T29504	1-11
MS17143	10-35
MS20659	10-6
MS25036	10-30, 10-31, 10-42
MS27488	8-125, 8-160

DSCC Part Number Index

Note: This index lists all cataloged parts by base no. only. Complete part nos. (with prefixes and/or suffixes) are shown on the page(s) indicated.

Part No.	Page
89065	1-11, 1-30
84149SSG	2-22, 2-92
84149SSGA	2-22
8501814FP	2-33, 2-92

Part No.	Page
85022SSG	2-24, 2-92
85022SSGA	2-24
85037SSG	2-23, 2-92
85037SSGA	2-23
8503812FP	2-34, 2-92
8604412SP	2-33, 2-92
86116ZSG	2-68, 2-92
86117ZSG	2-68

Part No.	Page
86118ZSG	2-68
86119ZSG	2-69, 2-92
86120ZSG	2-69, 2-92
94007ZCG	2-41, 2-92
94007ZSP	2-41
94008ZCG	2-41, 2-92
99012NAFPR	8-86
99012SAFPRA	8-86

Part No.	Page
99013NAEPR	8-86
99013SAEPR	8-86
99014NAESR	8-86
99014SAESR	8-86
99015NAESR	8-86
99015SAESR	8-86

NASA Part Number Index

Note: This index lists all cataloged parts by base no. only. Complete part nos. (with prefixes and/or suffixes) are shown on the page(s) indicated.

Part No.	Page
212518	8-60
212522	8-60
212526	8-60

Part No.	Page
212530	8-60
212534	8-60
212538	8-60
212542	8-60
311-P-4	8-102
445705	8-60
445730	8-60

Part No.	Page
446405	8-60
448153	8-60
311P405	8-85
311P407	8-74, 8-75, 8-83, 8-85, 8-86, 8-103
311P409	8-44, 8-45, 8-82, 8-84, 8-86, 8-103

Part No.	Page
G-08-P1	8-74, 8-103
G-08-S1	8-75, 8-103
G-10-P1	8-44, 8-103
G-10-S1	8-45, 8-103
GSFC*	8-37, 8-67

Catalog 1308940
Revised 9-14

www.te.com

Dimensions are shown for reference purposes only. Specifications subject to change.

Dimensions are in millimeters unless otherwise specified.

USA: +1 800 522 6752
Asia Pacific: +86 0 400 820 6015
UK: +44 800 267 666

For additional support numbers please visit www.te.com

Tooling Part Number Index

Note: This index lists all cataloged parts by base no. only. Complete part nos. (with prefixes and/or suffixes) are shown on the page(s) indicated.

Part No.	Page
0003	2-105, 2-107
0004	2-105, 2-107
0005	2-105, 2-107
0007	2-111, 2-112, 2-115, 2-116
0008	2-115
0016	2-106, 2-112, 2-115
0017	2-106, 2-112, 2-115
0031	2-117
0035	2-105, 2-107
0036	2-111, 2-112, 2-115
0044	2-105
0065	2-127
0081	2-127, 2-137
0082	2-127
0083	2-127
0132	2-134
0172	2-117
0186	2-117
0800	1-77
1001	2-134
1004	2-137
1008	2-111
1008	2-112
1009	2-116
13126	2-82
13127	2-82
21027	2-82
35940	4-25
45098	8-150, 8-151, 9-35
45433	10-7, 10-22
45436	10-7, 10-22
45442	10-7
45445	10-7
45639	8-148, 8-149, 10-7
45730	10-21
45740	8-149
46121	10-37
46447	10-21
46467	10-21
46468	10-21
46673	10-21
46988	10-21
47386	10-37, 10-40
47387	10-37, 10-40
47806	10-37, 10-40
47807	10-37, 10-40
47808	10-37, 10-40
47812	10-7
47813	10-7
47814	10-7
47824	10-41
47825	10-41
47915	10-41
47918	10-41
48172	10-7, 10-22
48173	10-7, 10-22
48174	10-7, 10-22
48183	10-7, 10-22

Part No.	Page
48816	10-7
48817	10-7
48818	10-7
48819	10-7
49592	10-7
49935	10-7
49956	10-7, 10-22
58277	1-88
58279	1-88
58280	1-88
58284	4-25, 4-34, 4-40, 8-29
58305	9-35
58433	10-37
58483	4-25
58495	8-145, 8-146
58537	2-82
58541	8-144
58546	10-7
59239	10-37, 10-40
59250	10-37, 10-40
59275	10-37
59287	10-37
59294	10-21
59300	10-40
59461	10-21
59824	10-37
59826	10-37
59827	10-37
59828	10-37
59877	10-25 to 10-27
59975	10-22
59980	2-82, 2-85, 4-23, 4-56, 8-65
59981	2-22, 2-23, 2-25, 2-82
68006	10-25, 10-27
68007	10-25 to 10-27
68008	10-25 to 10-27
68009	10-25 to 10-27
68010	10-25 to 10-27
68011	10-25 to 10-27
68240	10-7
68241	10-7
68242	10-7
68243	10-7
68250	10-5, 10-7
68284	10-28
68312	10-7
68313	10-7
68343	10-37
69015	10-7, 10-22
69147	8-149
69151	10-40
69163	10-37
69186	8-148
69186	8-149
69216	10-21
69216	10-7, 10-22
69217	10-7, 10-21, 10-22
69218	10-7, 10-22
69220	8-148, 8-149
69222	8-148, 8-149
69227	8-148, 8-149

Part No.	Page
69248	8-148
69272	10-11
69315	8-148
69327	10-21
69328	10-21
69329	10-21
69344	10-37
69355	10-7, 10-22
69363	10-7
69365	8-64, 8-143
69373	8-148, 8-149
69440	8-149
69463	10-41
69656	8-150, 8-151
69672	8-149
69675	8-148
69690	8-150, 8-151
69692	10-21
69693	10-21
69710	2-82, 8-64, 8-156, 10-37, 10-40
69731	10-21
69732	10-21
69733	10-21
69734	10-21
69735	10-21
69872	10-37
69873	10-37
69874	10-37
69875	8-144, 10-5, 10-7, 10-21
69877	10-37
69897	10-37
69911	10-7
69912	10-7
69913	10-7
69914	10-7
69930	10-21
69931	10-21
69932	10-21
69936	10-21
69937	10-21
69954	10-21
69955	10-21
69956	10-21
90067	9-33
90121	8-143
90122	8-143
90136	8-144
90140	8-147, 9-30
90145	8-147, 9-30
90223	8-105
90225	8-145
90230	8-144
90231	8-144
90249	8-144
90250	8-144
90294	8-67
90302	8-37
90312	8-37
90327	8-146
90346	1-56
90374	8-37

Part No.	Page
90566	10-7
91002	8-145, 8-146
91019	8-147
91035	1-78
91038	8-105
91038	9-28
91042	8-105
91066	4-19, 4-20, 4-21, 4-34, 4-40, 4-53, 4-54, 4-58
91067	4-53, 8-37, 8-38, 8-67, 8-68, 8-74, 8-75, 8-87
91074	4-34, 4-58
91117	1-77, 1-89
91156	1-78
91362	2-83, 2-84, 2-87
91505	8-145, 9-29
91507	9-29
91515	8-145, 8-146
91519	8-145
91521	8-145
91523	8-145, 9-29
91538	8-144
91539	8-144
91540	1-59
91542	8-145
91544	8-105, 9-28
91550	8-146
91902	4-23, 4-56
91904	4-23, 4-24
91905	4-23, 4-24, 4-56 to 4-58
91907	4-25
91911	8-150, 8-151
91912	8-148, 8-149
125905	4-53, 4-54
126195	8-39, 8-40, 8-44, 8-45, 8-69, 8-74, 8-75, 8-87
126237	8-69, 8-74, 8-75, 8-87
189721	8-144, 8-145, 8-150, 8-151, 10-7, 10-21
1897228	8-144, 8-145, 8-150, 8-151, 10-7, 10-21
189767	10-21
189928	8-144, 8-145,10-21
200893	8-144
201142	8-148, 8-149
217200	10-21, 10-40
217206	10-21
220015	2-82, 4-23, 4-56, 4-57
220020	4-24, 4-58
220061	2-14, 2-15
220215	1-70
220216	1-70
220220	2-25, 2-82, 4-23, 4-56
220221	2-22, 2-82
220222	2-82
220224	2-82
265871	1-78
305183	8-65, 8-143, 8-145, 8-146, 8-148 to 8-151, 9-37

Catalog 1308940
Revised 9-14

www.te.com

Dimensions are shown for reference purposes only. Specifications subject to change.

Dimensions are in millimeters unless otherwise specified.

USA: +1 800 522 6752
Asia Pacific: +86 0 400 820 6015
UK: +44 800 267 666

For additional support numbers please visit www.te.com

Tooling Part Number Index (Continued)

Part No.	Page
307581	2-82
311386	2-82
311392	2-82
311395	2-82
311396	2-82
312067	2-82
312173	2-23
312253	2-22, 2-23, 2-25, 2-82, 4-23, 4-56, 8-65
312317	2-82
314269	10-37, 10-40
314270	10-37, 10-40
314516	10-7
314517	10-7
314518	10-7
314537	10-37
314948	10-25, 10-26
314964	10-25, 10-26, 10-27
318161	8-144, 8-147 to 8-151, 10-21
318813	8-63, 8-64
354500	8-116, 8-156
354940	2-82, 4-24, 4-58, 8-148 to 8-151
356302	10-21
356304	8-144, 8-145, 8-150, 8-151, 10-21
356500	8-115, 8-158
445147	4-19, 4-21, 4-34, 4-40, 4-54
445815	4-20
448703	4-25, 4-34
450490	3-41
451716	3-44
453228	3-41
454257	3-41
454297	3-41
454335	3-41
454342	3-41
454481	3-41
454482	3-41
454483	3-41
454484	3-41
454539	3-41
454899	3-41
454900	3-41
466321	8-145, 8-146
466323	8-145, 8-146
466324	8-145
466325	8-145
466326	8-145
466383	8-145
466384	8-146
466585	8-145
466598	8-145
466906	8-145
466907	8-145, 8-146
466908	8-145, 8-146
466914	8-146
466923	8-145
466942	8-145
466958	8-145
466979	8-145

Part No.	Page
471273	8-115
471273	8-156
528324	8-158
567363	8-145
567364	8-145
576778	10-20, 10-22
576779	10-20, 10-22
576780	10-20, 10-22
576781	10-20, 10-22
576782	10-20, 10-22
576783	10-20, 10-22
576784	10-20, 10-22
592105	8-160
599406	4-34, 4-53 to 4-55
601963	4-58
601966	4-23 to 4-25, 4-34, 4-55 to 4-58, 8-74, 8-75
601967	4-34, 4-55, 8-144, 8-150, 8-151
603995	2-85
608650	4-23 to 4-25
608651	8-63
679300	10-37, 10-40
679301	10-7
679305	10-37, 10-40
687997	8-146
768625	10-7
811145	1-105
811262	8-93
852113	8-65
852115	8-65
861751	9-29, 9-33, 9-35
863558	9-30
864437	9-37
864886	9-37
904870	10-21
1055236	2-84
1055270	2-84
1055420	2-83
1055421	2-84
1055439	2-83, 2-87
1055440	2-83
1055441	2-83, 2-87
1055442	2-83
1055443	2-83
1055446	2-83, 2-84
1055447	2-83
1055448	2-83
1055449	2-83, 2-87
1055450	2-83
1055451	2-83, 2-84
1055454	2-83, 2-84
1055455	2-85
1055456	2-87
1055457	2-87
1055458	2-87
1055459	2-87
1055460	2-87
1055461	2-87
1055463	2-87
1055464	2-87
1055465	2-85

Part No.	Page
1055466	2-87
1055467	2-87
1055478	2-85
1055479	2-85
1055496	2-86
1055497	2-86
1055524	2-86
1055525	2-86
1055526	2-86
1055527	2-86
1055528	2-86
1055530	2-86
1055547	2-87
1055779	2-87
1055780	2-87
1055781	2-87
1055782	2-87
1055811	2-85
1055813	2-85
1055814	2-85
1055815	2-85
1055823	2-85
1055824	2-85
1055825	2-85
1055827	2-85
1055831	2-83
1055832	2-83
1055833	2-83
1055834	2-83
1055835	2-83
1055836	2-83
1055837	2-83
1055838	2-83
1055839	2-83
1055840	2-83
1055841	2-83
1055842	2-83
1055843	2-83
1060713	2-84
1060714	2-84
1060715	2-84
1060716	2-84
1080269	2-86
1320420	8-115, 8-158
1320895	8-116, 8-157
1338600	8-116, 8-157
1338757	10-7
1338758	10-7
1490406	10-41
1490413	10-7, 10-22
1490414	10-7, 10-22
1490597	10-41
1490598	10-41
1490599	10-41
1490745	10-7, 10-22
1490746	10-7, 10-22, 10-41
1490748	10-7, 10-22
1490749	10-7, 10-41
1583659	10-7, 10-21, 10-22, 10-28, 10-41
1583661	10-7, 10-21, 10-22, 10-28, 10-41

Part No.	Page
1583662	10-28
1673672	10-7, 10-22
1738215	8-30
1738216	8-30
1738217	8-30
1738218	8-30
1738219	8-30
1738220	8-30
1738221	8-30
1738894	6-19
1738894	6-20
1752786	10-7
1752788	10-7
1752787	10-25 to 10-28, 10-41
1752868	10-7, 10-22
1752877	10-25 to 10-28, 10-41
1804700	10-7, 10-21, 10-22, 10-25, 10-28, 10-41
1901775	10-28
1901776	10-28
1901777	10-28
1901782	10-28
1901783	10-28
1976230	10-22, 10-41
2217375	6-3
2217376	6-3
A30199	6-7
CE*	8-119. 8-134
CTA*	8-119
CTA*	8-134
DAK83	3-30
ES*	8-119
HG*	6-8
HL1910E	6-8
M22520	4-53 to 4-58, 6-3, 8-38, 8-44, 8-45, 8-68, 8-160, 9-37
M81969	8-125
MS81969	4-53, 4-54
TP*	9-37

Dimensions are shown for reference purposes only. Specifications subject to change.

Dimensions are in millimeters unless otherwise specified.

USA: +1 800 522 6752
Asia Pacific: +86 0 400 820 6015
UK: +44 800 267 666

For additional support numbers please visit www.te.com

Global Contacts

Americas

United States – Harrisburg, PA
Product Information Center:
(Technical Support)
Phone: +800-522-6752
Fax: +717-986-7575

Menlo Park, CA 94025-1164
USA
Phone: +1-800-926-2425
+1-650-361-3860
Fax: +1-717-986-7575

Asia

Phone: +86-400-820-6015

Europe

Austria
Phone: +43-1-905-601-228

Baltic Regions
Phone: +46-8-5072-5000

Benelux
Phone: +31-73-6246-999

France
Phone: +33-1-34-20-86-86

Germany
Phone: +49-6251-133-1999

Italy
Phone: +39-011-401-2632

Nordic
Phone: ++46-8-5072-5000

Spain/Portugal
Phone: +34-93-2910366

Switzerland
Phone: +41-52-633-66-26

United Kingdom
Phone: +44-800-267-666

Czech Republic
Phone: +420-800-701-462

Poland
Phone: +48-800-702-309

Hungary
Phone: +36-809-874-04

Russia
Phone: +7495-790-790-2

Need more information?

Technical Support is staffed with specialists well versed in all TE Connectivity products. They can provide you with:

- Technical Support
- Catalogs
- Technical Documents
- Product Samples
- TE Authorized Distributor Locations

Web Site

Visit **www.te.com/ADM** for additional information on all our products and market segments for the Aerospace, Defense and Marine markets.

© 2010, 2006, 2003, 2002 and 2014 by TE Connectivity
All Rights Reserved.

ACTION PIN, AMP, AMP-BLADE, AMP-HDI, AMP-O-LETRIC, AMP-O-MATIC, AMP-TAPEMATIC, AMP-TAPETRONIC, AMPLIMITE, AMPMODU, AMPOMATOR, CEELOK FAS-T, CERTI-CRIMP, COAXICON, COPALUM, DEUTSCH, -DIAMOND GRIP, DYNA-CRIMP, FASTON, FORTIS ZD, HOLTITE, JACKMATE, LEPRA/CON, LGH, MATE-N-LOK, MEZALOK, MINIRAY, MULTIGIG RT, NANONICS, OSP, PIDG, PRO BEAM, PRO-CRIMPER, SOLISTRAND, STRATO-THERM, T-HEAD, TE (logo) TERMI-POINT, TERMINYL, TETRA-CRIMP, TE CONNECTIVITY, ULTRA-LITE are trademarks of TE group of companies and its licensors. Other products, logos, and company names mentioned herein may be trademarks of their respective owners.

Disclaimer
All information, including illustrations, is believed to be reliable. Users, however, should independently evaluate the suitability of each product for their application. TE Connectivity makes no warranties as to the accuracy or completeness of the information, and disclaims any liability regarding its use. TE Connectivity only obligations are those in the Standard Terms and Conditions of Sale for these products and in no case will TE Connectivity be liable for any incidental, indirect or consequential damages arising from the sale, resale, use, or misuse of the product.

TE Specifications are subject to change without notice. In addition, TE Connectivity reserves the right to make changes in materials or processing without notification to the Buyer which do not affect compliance with any applicable specification.

Export of TE products may require licensing.

Printed in the U.S.A.

te.com

© 2014 TE Connectivity Ltd. family of companies. All Rights Reserved
1308940 ADM 1.5m MS 09/2014
TE Connectivity, TE connectivity (logo) and TE (logo) are trademarks. Other logos, product and/or company names might be trademarks of their respective owners.

Mouser Electronics

Authorized Distributor

Click to View Pricing, Inventory, Delivery & Lifecycle Information:

TE Connectivity:
530733-9