© 2021 TE Connectivity. All Rights Reserved.

REVISIONS					
P	LTR	DESCRIPTION	DATE	DWN	APVD
	C	REVISED PER ECN-23-211368	05MAY2023	BKW	AF
	D	REVISED PER ECN-23-227018	18AUG2023	BKW	AF
	E	REVISED PER ECN-24-251571	08FEB2024	BKW	AF
	E1	REVISED PER ECN-24-252074	14FEB2024	BKW	WM

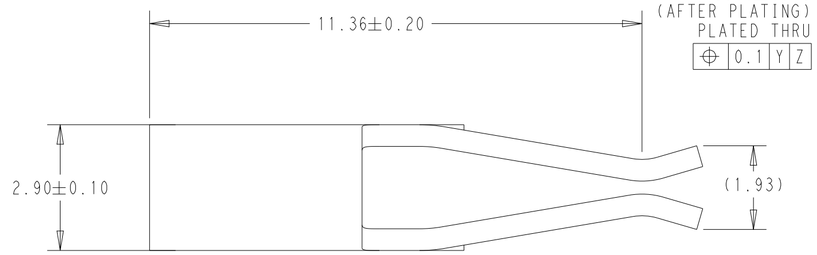

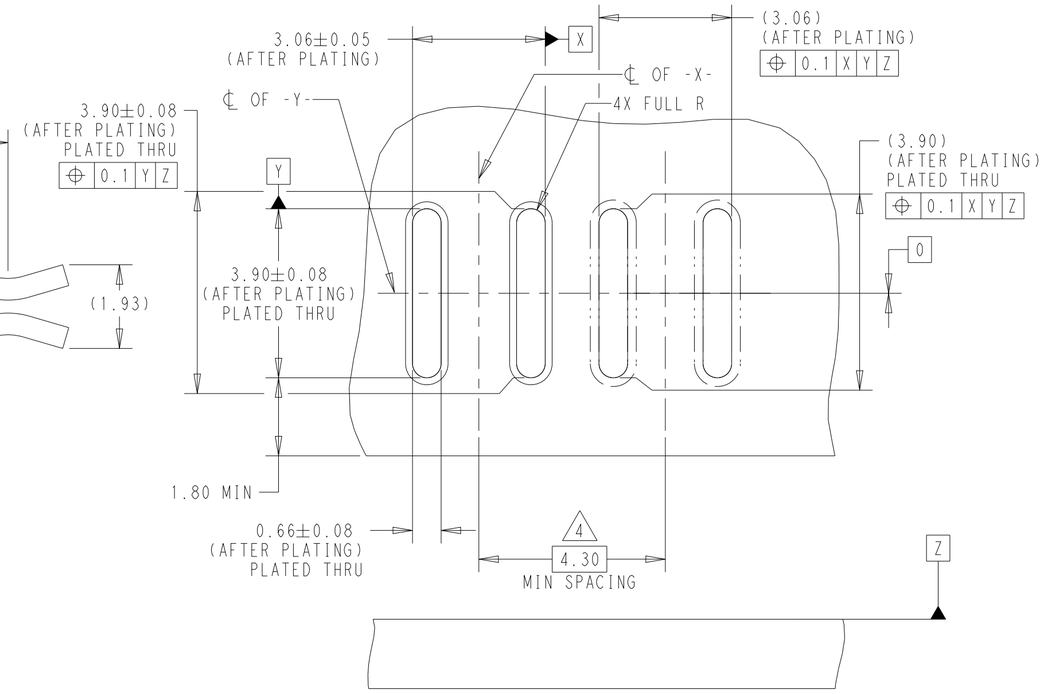

RECOMMENDED PCB LAYOUT

SCALE 10:1

1. ALL DIMENSIONS SHOWN ARE REFERENCE UNLESS STATED OTHERWISE.
2. SELECTIVE TIN PLATING APPLIED TO ALL SURFACES IN AREAS SHOWN.
3. DESIGNED TO BE INSERTED DIRECTLY INTO A PCB WITH AN INTERFERENCE FIT BETWEEN THE TERMINALS SOLDER LEGS AND THE RECOMMENDED PCB SLOT LAYOUT.
4. PROPER TERMINAL SPACING CAN VARY DUE TO MANY FACTORS. TO VERIFY PROPER SPACING FOR YOUR APPLICATION PLEASE CONTACT TE PRODUCT ENGINEERING FOR A COMPLETE ANALYSIS.
5. PART IS LUBRICATED, AND LUBRICANT MAY BE PRESENT ON ENTIRE PART SURFACE. AVOID CONTACT WITH TERMINAL CONTACT ZONE DURING HANDLING TO AVOID REMOVING LUBRICANT FROM PART IN THIS AREA.

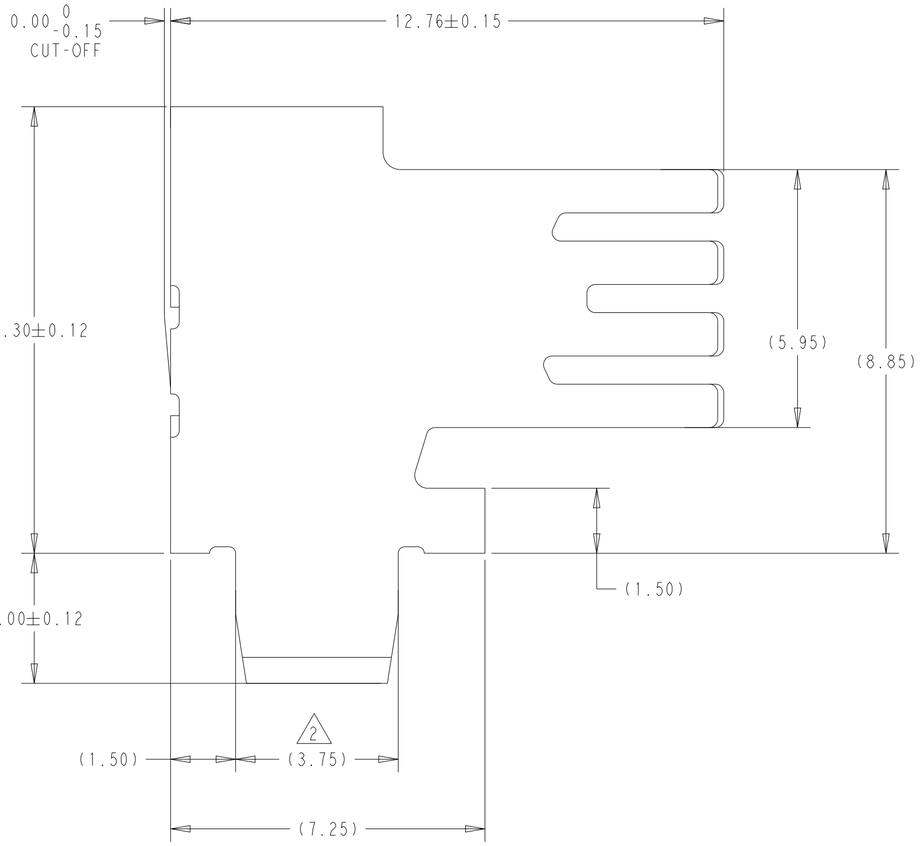

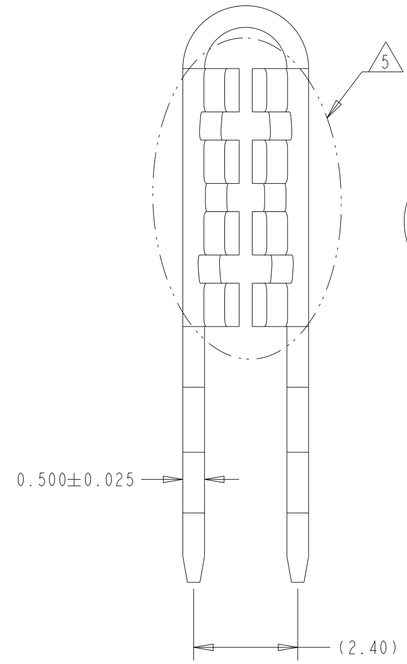

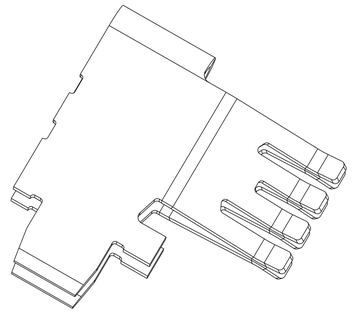

2388378-5 (LOOSE PIECED)
SHOWN ABOVE
SCALE 5:1

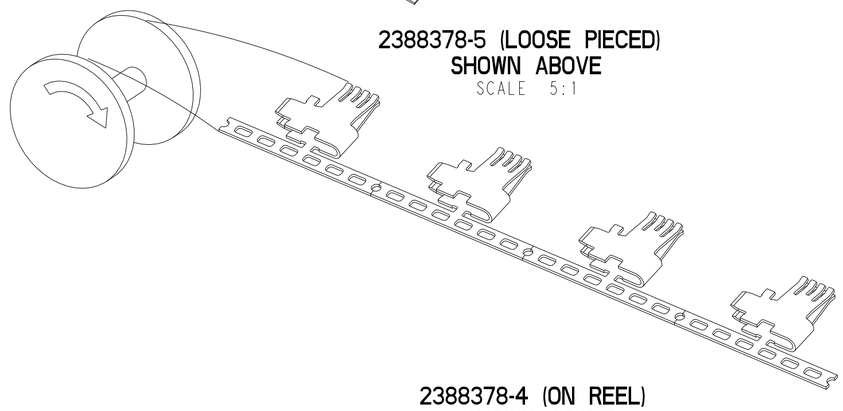

2388378-4 (ON REEL)
SHOWN ABOVE
SCALE 3:2

CONFIGURATION	PLATING	MATERIAL	PART NUMBER
LOOSE PIECED	NICKEL W/ SELECTIVE Sn	COPPER ALLOY	2388378-5
ON REEL	NICKEL W/ SELECTIVE Sn	COPPER ALLOY	2388378-4

THIS DRAWING IS A CONTROLLED DOCUMENT.

DIMENSIONS: mm

TOLERANCES UNLESS OTHERWISE SPECIFIED:
0 PLC ±
1 PLC ±
2 PLC ±
3 PLC ±
4 PLC ±
ANGLES ±
1

MATERIAL: SEE TABLE
FINISH: SEE TABLE

DWN B. WEAVER 08APR2021
CHK A. FORTIER 08APR2021
APVD W. MOYER 08APR2021
PRODUCT SPEC 108-160280
APPLICATION SPEC 114-160168
WEIGHT -

TE Connectivity

NAME: RECEPTACLE TERMINAL, PCB BATTERY CONNECTOR
-

SIZE A2 | CAGE CODE 00779 | DRAWING NO C-2388378 | RESTRICTED TO -

CUSTOMER DRAWING | SCALE 10:1 | SHEET 1 OF 1 | REV E1

1471-9 (3/13)

Mouser Electronics

Authorized Distributor

Click to View Pricing, Inventory, Delivery & Lifecycle Information:

TE Connectivity:

2388378-5