THIS COPY IS PROVIDED ON A RESTRICTED BASIS AND IS NOT TO BE USED IN ANY WAY DETRIMENTAL TO THE INTERESTS OF PANDUIT CORP.

PANDUIT PART #	RECOMMENDED FASTENER	A	B	C	D +.015 (+.38) -.005 (-.13)	E	F	G (REF)	H (REF)	I (REF)	USE WITH CABLE TIE CROSS SECTIONS	WEIGHT 100 pcs lbs (g)
TM2S8-86A	#8 (M4) SCREW	.630 (16.0)	.422 (10.7)	.275 (7.0)	.215 (5.5)	.064 (1.6)	.155 (3.9)	.105 (2.7)	.325 (8.3)	.178 (4.5)	MINIATURE INTERMEDIATE STANDARD	.12 (54)
TM3S8-86A		.867 (22.0)	.614 (15.6)	.373 (9.5)	.322 (8.2)	.087 (2.2)	.209 (5.3)	.114 (2.9)	.325 (8.3)	.178 (4.5)	STANDARD LIGHT HEAVY	.39 (177)
TM3S10-86A	#10 (M5) SCREW	.867 (22.0)	.614 (15.6)	.373 (9.5)	.322 (8.2)	.087 (2.2)	.209 (5.3)	.114 (2.9)	.385 (9.8)	.200 (5.1)		.37 (168)

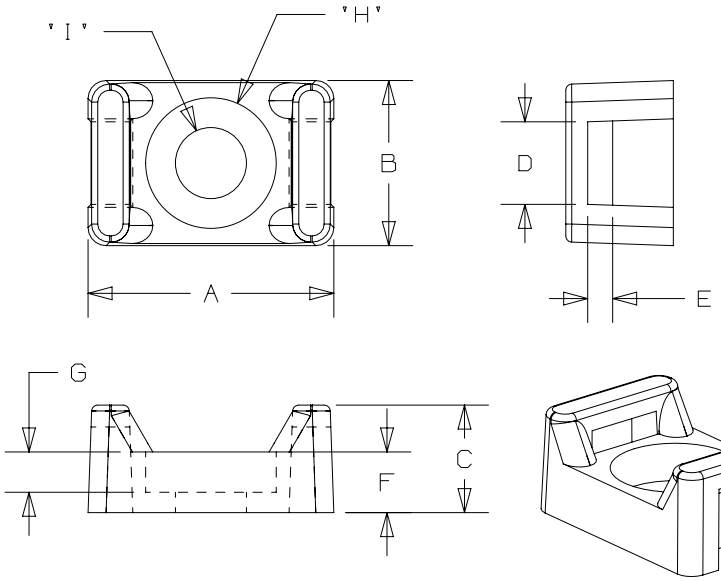

NOTES:

1. SEE CURRENT PRICE SHEET FOR PART NUMBER SUFFIX DESIGNATION FOR PACKAGE SIZE.
2. COMPOSED OF ANTI-MICROBIAL METAL DETECTABLE NYLON.
3. COUNTERBORE HOLE TO PROVIDE LESS OF AN OBSTRUCTION TO THE BUNDLE.
4. UNIQUE CRADLE DESIGN PROVIDES MAXIMUM STABILITY AND RIGIDITY TO THE WIRE BUNDLE.

REV	DATE	BY	CHK	APR	DESCRIPTION	ECN
00	10/16/20	RUMO	BWG	JADE	INITIAL RELEASE	

TITLE

TM2, TM3 TIE MOUNTS, ANTI-MICROBIAL MET-DET NYLON SERIES

CONTROL DRAWING

ITEM REVISION NAME: 00983EBB/00

DATASET FILE NAME: 00983EBB_DC/00

UNLESS OTHERWISE SPECIFIED, DIMENSIONAL TOLERANCES ARE: IN [mm]

.X ± .1 [2.54] .XXX ± .005 [.127]

.XX ± .01 [.25] ANGLES ± 5 °

THIRD ANGLE PROJECTION

MATERIAL: ANTI-MICROBIAL METAL DETECTABLE NYLON COLOR: BLUE

DRAWING NUMBER: 00983EBB_DC

DRAWN BY	DATE	CHK	SCALE		SIZE
RUMO	10/16/20	BWG	NONE	SHT 1 OF 1	A

D10100DA/20

Mouser Electronics

Authorized Distributor

Click to View Pricing, Inventory, Delivery & Lifecycle Information:

Panduit:

TM2S8-C86A TM3S10-C86A TM3S8-C86A