MICRO SWITCH
FREEPORT ILLINOIS U S A
A DIVISION OF HONEYWELL
FED MFG CODE 91929

SWITCH-ENCLOSED

CATALOG LISTING
602EN604

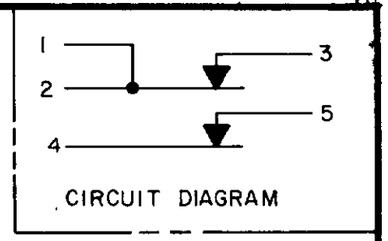

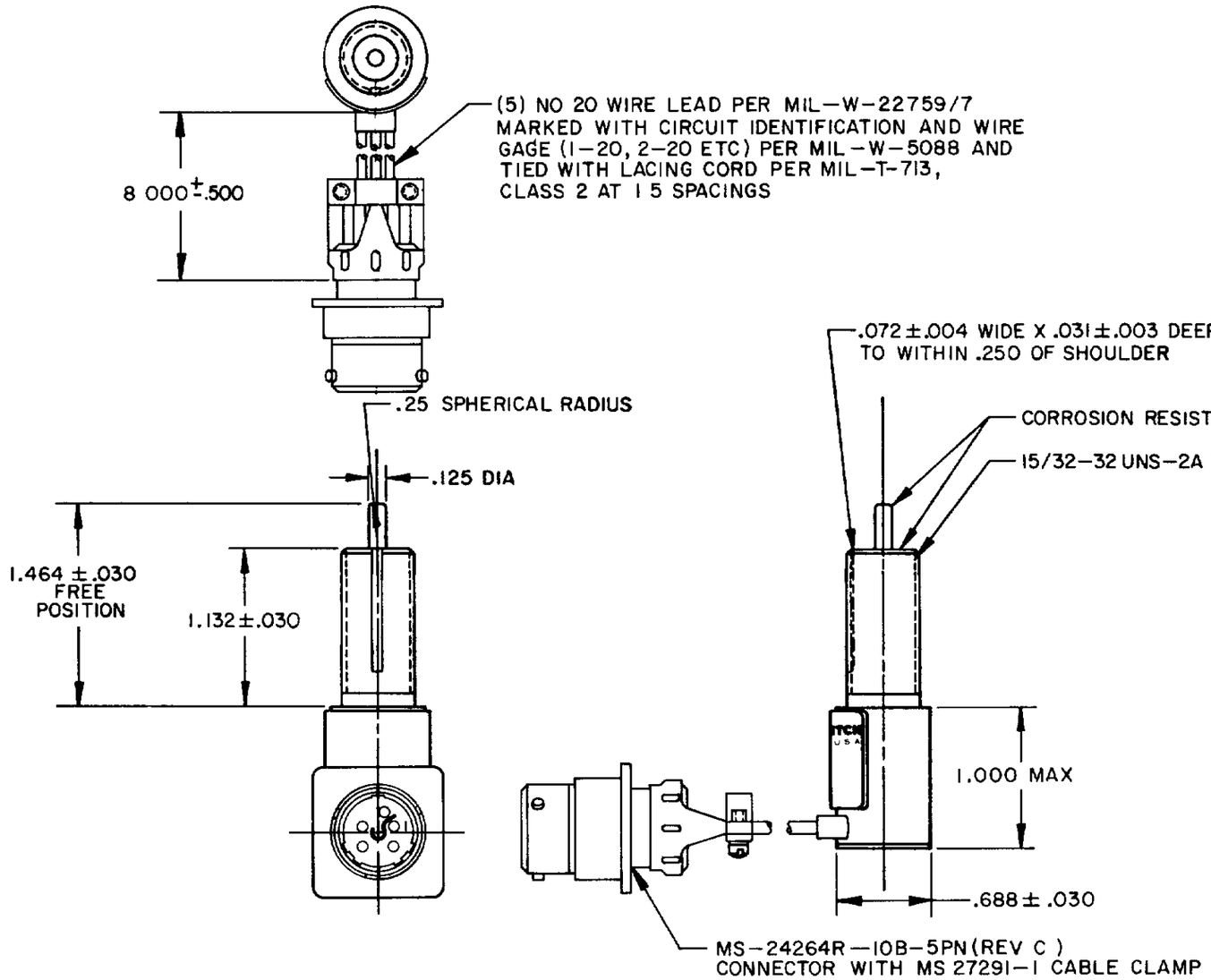

THIS DRAWING COVERS A PROPRIETARY ITEM AND IS THE PROPERTY OF MICRO SWITCH, A DIVISION OF HONEYWELL. THIS DRAWING IS NOT TO BE COPIED OR USED WITHOUT THE APPROVAL OF MICRO SWITCH

THIRD ANGLE PROJECTION

SCALE FULL

DO NOT SCALE PRINT

UNLESS OTHERWISE SPECIFIED TOLERANCES ARE

ONE PLACE	(.0)	±.030
TWO PLACE	(.00)	±.015
THREE PLACE	(.000)	±.005
ANGLES		±

RAW MATERIAL-COMMERCIAL STANDARD
MICRO SWITCH STANDARDS APPLY

DIMENSIONS ARE TO BE MET BEFORE PROTECTIVE COATINGS ARE APPLIED

WEIGHT

CHARACTERISTICS

OPERATING FORCE	2-4 LB
FULL OVERTRAVEL FORCE	15 LB MAX
RELEASE FORCE	1 LB MIN
PRETRAVEL	040 MAX
DIFFERENTIAL TRAVEL	020 MAX
OVERTRAVEL	250 MIN

ELECTRICAL DATA

CONTACT ARRANGEMENT
S P N C (2)

LOAD	28 VDC	
	SEA LEVEL	50,000 FT.
RES	7	7
IND	4	2 5
MOTOR	4	
LAMP		

NOTES
1 - CORROSION RESISTANT STEEL ENCLOSURE
2 - SWITCH SEALED PER MIL-S-8805 SYMBOL 4
3 - CIRCUIT DIAGRAM, CAT. LIST., AND DATE CODE, CUSTOMER CODE NO. (96193), CUST. PART NO. (203336). OUR MANUFACTURING NO. (91929) ARE SHOWN ON NAMEPLATE
4 - HARDWARE MAY BE PACKAGED UNASSEMBLED PER MIL-S-8805

602EN604 M

DRAWING NUMBER

ISSUE 17 16 15

RELEASE NO. PR-1515

REPLACES

REVISIONS
A C044351 J A P 5 MAR 80
B C051415 KAG 6 MAY 82
C C057370 TSK 14 MAY 85
D C066363 T J O 8 SEP 89
E C067008 MAM 1 FEB 90
F C077642 DLT 25 MAY 94

DRAWN J A P 5 MAR 80
CHECK CEB 6 MAR 80
CHECK
CHECK
CHECK

FO-52851-A

Mouser Electronics

Authorized Distributor

Click to View Pricing, Inventory, Delivery & Lifecycle Information:

Honeywell:
602EN604