Mar.1.2024 Copyright 2024 HIROSE ELECTRIC CO., LTD. All Rights Reserved.
In case of consideration for using Automotive equipment / device which demand high reliability, kindly contact our sales window correspondents.

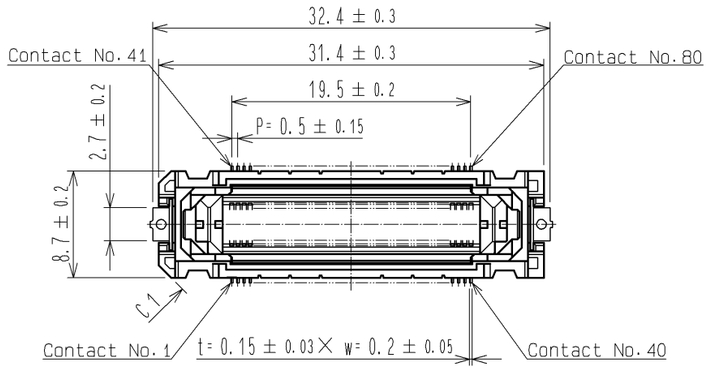

RECOMMENDED LAND PATTERN DIMENSION OF PCB

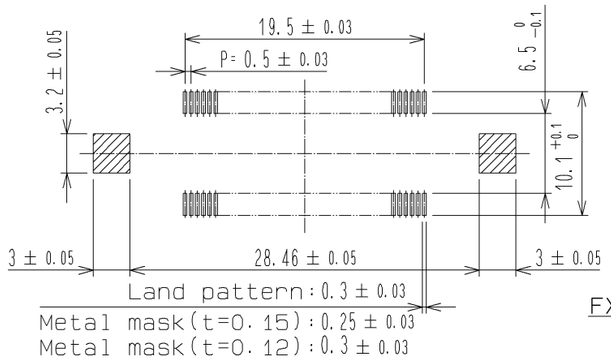

3 FLOATING RANGE

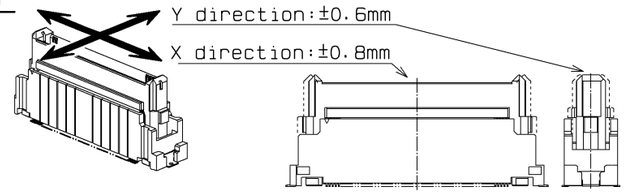

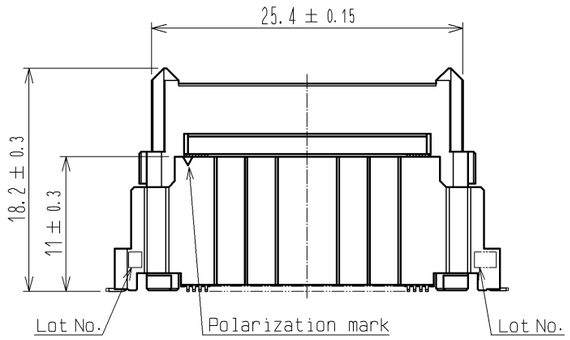

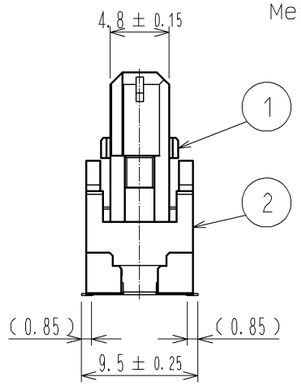

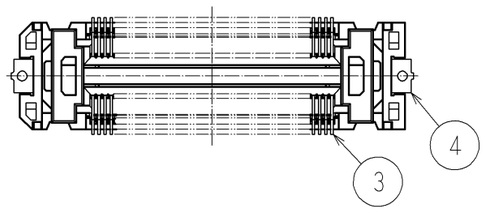

PCB DISTANCE (No scale)

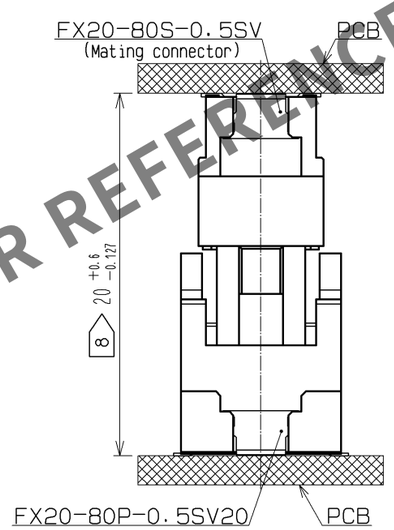

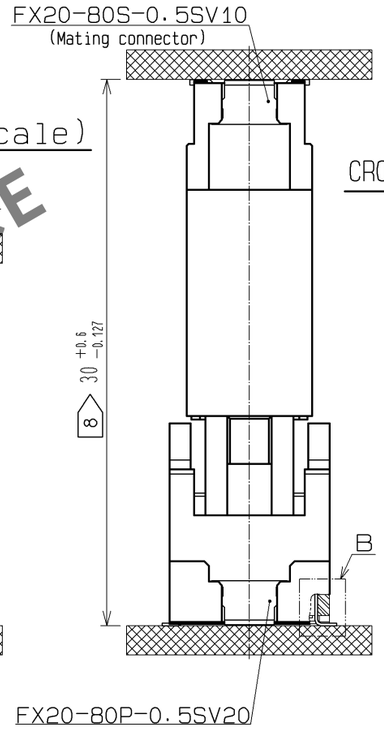

CROSS SECTION OF MATING (No scale)

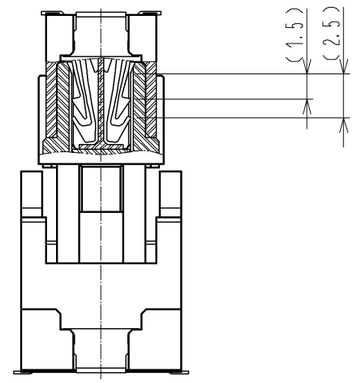

2 DRAWING FOR PACKING (No scale)

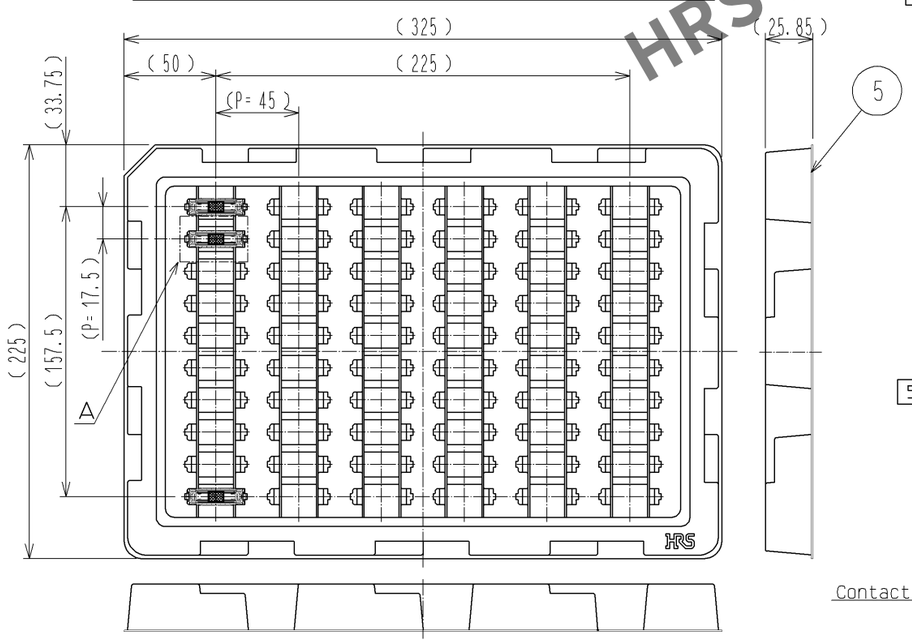

B (10 : 1)

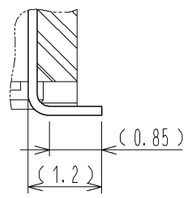

A (1 : 1)

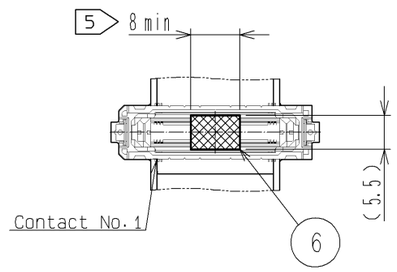

1 Lead CO-Planarity is 0.1mm MAX.
2 This is packaged in tray. (60pcs/tray)
3 Floating range of this connector is ±0.8mm MAX in the X direction and ±0.6mm MAX in the Y direction.
4 Blemish and hit mark can be occured through out the manufacturing process which doesn't affect quality level.
5 It shows the vacuum pickup area. Remove the mylar tape before mating connectors.
6 Please note that excessive wrenching force could damage this connector.
Please refer to the guideline for detailed regulations of the mating method.
7 The dimensions in parentheses are for references.
8 Please use the connectors within the specified PCB distance.

NO.	MATERIAL	FINISH , REMARKS
2	POLYAMIDE	BLACK UL94V-0
1	POLYAMIDE	BLACK UL94V-0

NO.	MATERIAL	FINISH , REMARKS
6	POLYIMIDE	(TAPE FOR VACUUM PICKUP)
5	POLYSTYRENE	(TRAY)
4	BRASS	TIN-PLATING 1μm
3	COPPER ALLOY	CONTACT AREA: GOLD 0.1μm
		LEAD AREA: GOLD 0.03μm
		UNDER PLATING: NICKEL 1μm

UNITS mm	SCALE 2 : 1	COUNT	DESCRIPTION OF REVISIONS	DESIGNED	CHECKED	DATE

HIROSE ELECTRIC CO., LTD.

APPROVED	: HS. OKAWA	14.06.09	DRAWING NO.	EDC3-336327-01
CHECKED	: KN. SHIBUYA	14.06.09	PART NO.	FX20-80P-0.5SV20(10)
DESIGNED	: TS. OONO	14.06.09	CODE NO.	CL570-1009-2-10
DRAWN	: TS. OONO	14.06.09		1/1

HRS DRAWING FOR REFERENCE

Mouser Electronics

Authorized Distributor

Click to View Pricing, Inventory, Delivery & Lifecycle Information:

Hirose Electric:

FX20-80P-0.5SV20(10)