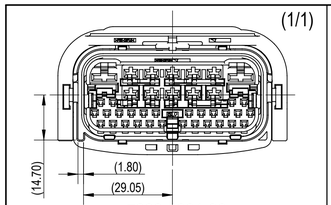

7298-1001-30
KEYWAY A

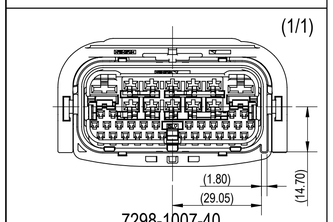

7298-1007-40
KEYWAY B

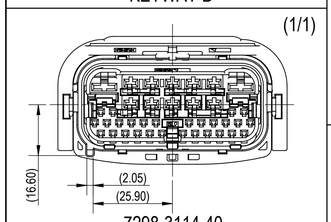

7298-3114-40
KEYWAY C

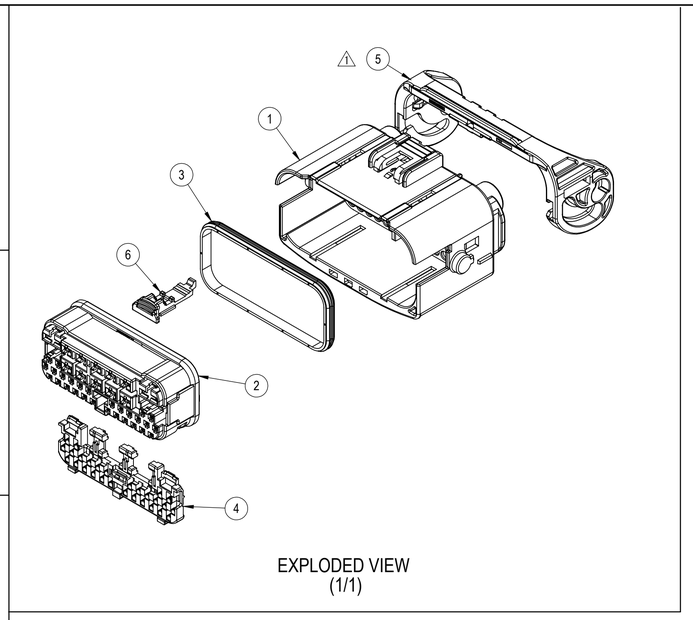

EXPLODED VIEW
(1/1)

TABLE 1	SUB-ASSEMBLY PART NUMBER	NO.	PART NUMBER	PART NAME	MATERIAL	COLOR	QUANTITY
	SEE TABLE 2	1	SEE TABLE 2	40P (2x6.3mm + 10x2.8mm + 28x1.2mm) SEALED FEMALE CONNECTOR OUTER HOUSING	PBT-GF15	SEE TABLE 2	1
		2	7189-8322-30	40P (2x6.3mm + 10x2.8mm + 28x1.2mm) SEALED FEMALE CONNECTOR INNER HOUSING	PBT-GF15	BLACK	1
		3	7137-3171-60	40P (2x6.3mm + 10x2.8mm + 28x1.2mm) SEALED FEMALE CONNECTOR INTERFACE SEAL	SILICONE	GREEN	1
		4	7172-1552	40P (2x6.3mm + 10x2.8mm + 28x1.2mm) SEALED FEMALE ISL	PBT-GF15	NATURAL	1
		5	7173-4181	40P (2x6.3mm + 10x2.8mm + 28x1.2mm) SEALED FEMALE LEVER	PBT-GF15	NATURAL	1
		6	7172-1555-50	40P (2x6.3mm + 10x2.8mm + 28x1.2mm) SEALED FEMALE CPA	PBT-GF15	RED	1

| TABLE 2 | SUB-ASSEMBLY PART NUMBER | HOUSING PART NUMBER | YAZAKI INLINE MATING PART NUMBER | KEYWAY | COLOR | X = BLOCKED CAVITY | | | | | | | | | | | | | | | | | | | | | | | | | | | | | | | | | | | | | | | | | | | | | | | | | | | | | | | | | | | | | | | | | | | | | | | | | | | | | | | | | | | | | | | | | | |
|---|---|---|---|---|---|---|---

Mouser Electronics

Authorized Distributor

Click to View Pricing, Inventory, Delivery & Lifecycle Information:

Yazaki:

7298100740 7298311410 7298100130