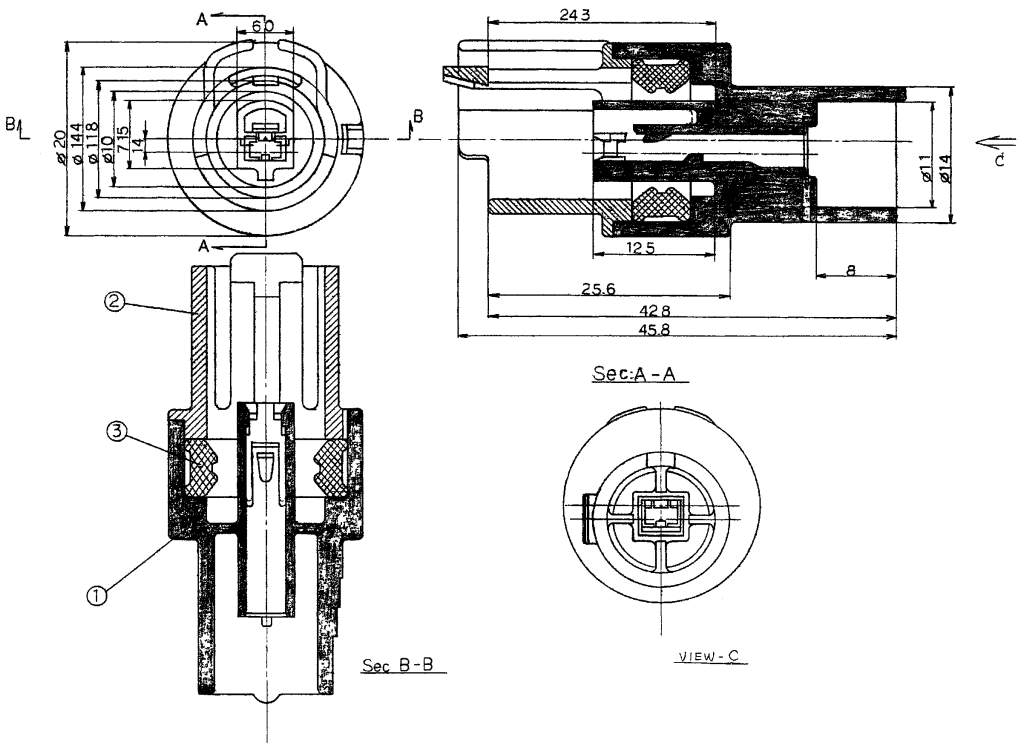

SUB ASSEMBLY PART NO. AND CH. CODE	NO.	△3 PART NAME	PART NO.	MATERIAL	COLOR
7219-3310	①	B.S. 1P HOUSING FEMALE	7119-3310	PBT-G15	NATURAL
	②	B.S. 1P LOCK HOUSING	7157-8672	PBT-G15	NATURAL
	③	B.S. 1P LIP PACKING	7137-1220	SILICONE RUBBER	————
△1 7219-3310-10	①	B.S. 1P HOUSING FEMALE	7119-3310-10	PBT-G15	DARK GRAY
	②	B.S. 1P LOCK HOUSING	7157-8672-10	PBT-G15	DARK GRAY
	③	B.S. 1P LIP PACKING	7137-1220	SILICONE RUBBER	————
7219-3310-30	①	B.S. 1P HOUSING FEMALE	7119-3310-30	PBT-G15	BLACK
	②	B.S. 1P LOCK HOUSING	7157-8672-30	PBT-G15	BLACK
	③	B.S. 1P LIP PACKING	7137-1220	SILICONE RUBBER	————
△2 7219-3310-40	①	B.S. 1P HOUSING FEMALE	7119-3310-40	PBT-G15	LIGHT GRAY
	②	B.S. 1P LOCK HOUSING	7157-8672-40	PBT-G15	LIGHT GRAY
	③	B.S. 1P LIP PACKING	7137-1220	SILICONE RUBBER	————
7219-3310-60	①	B.S. 1P HOUSING FEMALE	7119-3310-60	PBT-G15	GREEN
	②	B.S. 1P LOCK HOUSING	7157-8672-60	PBT-G15	GREEN
	③	B.S. 1P LIP PACKING	7137-1220	SILICONE RUBBER	————
7219-3310-70	①	B.S. 1P HOUSING FEMALE	7119-3310-70	PBT-G15	YELLOW
	②	B.S. 1P LOCK HOUSING	7157-8672-70	PBT-G15	YELLOW
	③	B.S. 1P LIP PACKING	7137-1220	SILICONE RUBBER	————

注記

1. 本部品は、部番7119-3310 ETC.と7157-8672 ETC.とを超音波、溶着する。

ISSUE MARK

LET	DATE	REVISION RECORD	NO.	CHKD
△3	2011/11/07	CHANGED PART NAME	C11-ZA50	T.M
△2	1988/07/12	ADDED COLOR PART NO.	8MC-0759	松浦
△1	1988/04/21	ADDED COLOR PART NO.	8MC-0450	鮫島
	1982/11/01	NEW	C82-3023	山田

GENERAL TOLERANCE

	10MAX	50MAX	100MAX	250MAX	2500VR	ANGLE	ECCENT
A	±0.15	±0.2	±0.3	±0.5	±0.75	±30'	0.1
Ⓑ	±0.2	±0.3	±0.55	±0.95	±1.4	±30'	0.1
C	±0.3	±0.5	±0.8	±1.4	±2	±30'	0.15

SPECIFIED | MASS

CUSTOMER					
CUSTOMER PART NO.		CUSTOMER DWG NO.			
OFFICE		TRIAL PART NO.			
VENDOR					
VENDOR NO.					
DWG TYPE	DWG SOURCE	DWG DATE	UNIT	SCL	ANGLE
R	NEW	1980/06/10	mm	FREE	3
APPROVED	CHECKED	CHECKED	DESIGN	DRAWN	
S.MIZUSE	————	R.CABANGAL	加藤	T.MELLA	
2011/11/07	————	2011/11/07		2011/11/07	

MATL. SPEC. SEE TABLE | TREAT. & FIN.

NAME △3 B.S. HOUSING 1P

SUB ASSEMBLY FEMALE

PART NO. CH. CODE 7219-3310 ETC.

DWG NO. 7219-3310:R | SET DWG NO.

YAZAKI CORPORATION

Mouser Electronics

Authorized Distributor

Click to View Pricing, Inventory, Delivery & Lifecycle Information:

Yazaki:

7219331030