SYMBOL DEFINITION		
A DIMENSION WITHOUT AN INSPECTION REPORT SYMBOL (□) DOES NOT REQUIRE INSPECTION. IT MAY BE CONTROLLED ON THE INDIVIDUAL COMPONENT DRAWING.	TOTAL NO OF INSPECTIONS REQUIRED	15
	LAST NO. USED	12

MISSING SYMBOLS
NO MISSING SYMBOL NUMBER

DWG STATUS					ZONE	REVISION HISTORY	AUTH	DR	APVD	APVD
DATE	STA	REV	PLP	DWR					2	1
30JL07	R	01	-	-	-	NEW DESIGN 13614177 WAS PE161277	401976	MEC	MEC	TP
11OC07	R	01	AA	-	-	UPDATED PDM ATTRIBUTES	402623	WM	WM	TP

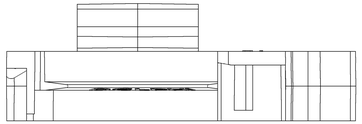

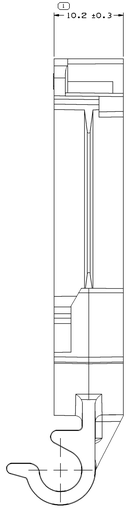

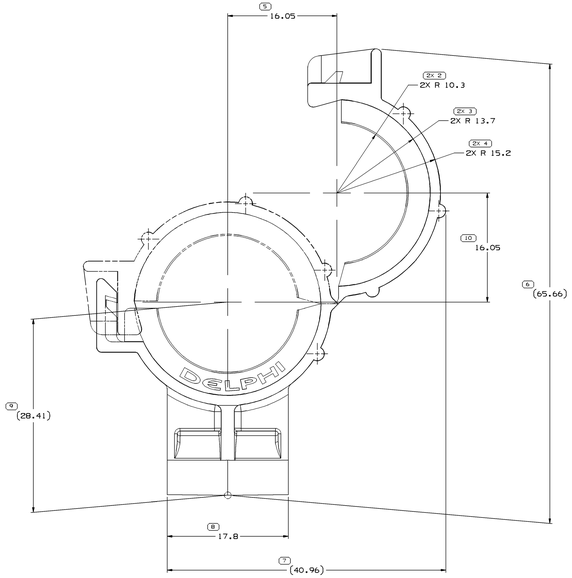

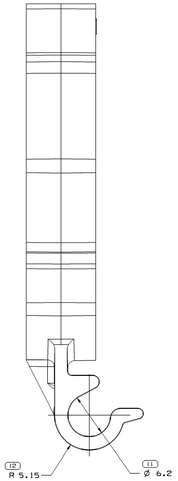

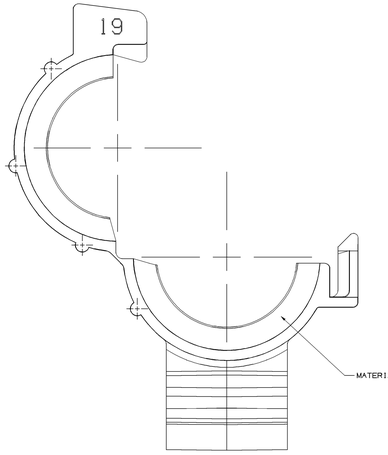

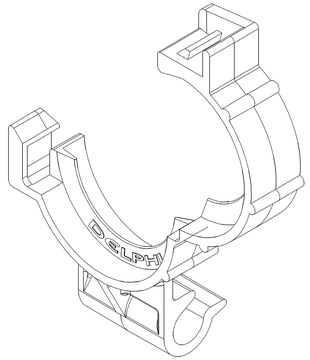

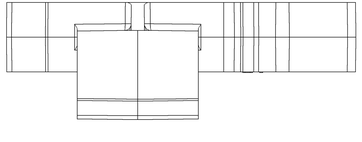

NOTES

1. UNLESS OTHERWISE SPECIFIED AND/OR INDICATED:

   DIMENSIONS ARE TO FACE OF VIEW SHOWN AND AUTOMATICALLY ROUNDED BY COMPUTER FOR INSPECTION (SEE MATH MODEL FOR PRECISE DIMENSIONS). FOR ALL OTHER DIMENSIONS NOT SHOWN BUT REQUIRED FOR TOOL BUILD, SEE MATH MODEL FOR PRECISE TOOL PATH DATA.

2. MATERIAL RECYCLING CODE PER ISO 11469, (11X10.1) CHARACTERS AS SHOWN TO BE LOCATED ON ANY EXTERIOR SURFACE. (OPTIONAL CONSTRUCTION).

3. THIS PART TO FIT 19MM CONDUIT AND 6.35MM O.D. TUBING

4. (2.31X10.1) DELPHI CORPORATE BRAND TO BE LOCATED ON ANY EXTERIOR SURFACE, PREFERABLY VISIBLE AT FINAL ASSEMBLY. OPTIONAL CONSTRUCTION FOR EXISTING TOOLING MAY BE "PED".

5. THIS PRODUCT IS NOT CATEGORIZED AS AN APPEARANCE ITEM, MINOR IMPERFECTIONS INCLUDING, BUT NOT LIMITED TO, FLOW MARKS, COLOR BLEMISHES, GATE VESTIGE, AND SOFT FLASH THAT DO NOT AFFECT THE FIT, FORM, OR FUNCTION OF THE PART ARE PERMISSIBLE PER NAP 4.10-18.

DRAWING NUMBER							
13614177							
SIZE	SCALE	FORMAT	SHEET NO	SHEETS	REV	PLP	AA
A1x3	5:1	2 OF 2	1 OF 1	R	01	AA	

DWG TYPE	
PART DRAWING	
STYLE	
VOLUME (CM³) 3.089	SYSTEM CODE D

UNLESS OTHERWISE SPECIFIED
THIS DRAWING IS IN ACCORDANCE WITH ASME Y14.5M-1994 AS MODIFIED BY THE DELPHI DIMENSIONING AND TOLERANCING STANDARD. ALL DIMENSIONS AND TOLERANCES OF FEATURES MAY BE MADE SEPARATELY REGARDLESS OF SYTAX REFERENCES.

ALL DIMENSIONS ARE IN MILLIMETERS

REFERENCE

(B) PROCESS SENSITIVE DIMENSION
DIMENSIONS ENCLOSED IN () INDICATE REFERENCE DIMENSIONS AND HAVE NO TOLERANCE LIMITS ON DRAWING

DECIMAL PLACES									
FRACTIONS	± 1/2	± 1/4	± 1/8	± 1/16	± 1/32	± 1/64	± 1	± 0.1	± 0.01
ANGLES	± 30	± 15	± 10	± 5	± 2	± 1	± 30'	± 15'	± 5'

DIMENSIONAL TOLERANCE (MM)							
FROM	0	6	30	120	400	1000	2000
TO	6	30	120	400	1000	2000	4000
TOLERANCE UNLESS OTHERWISE SPECIFIED							
±0.15	±0.2	±0.3	±0.5	±0.8	±1.2	±1.8	±2.5
ANGULAR TOLERANCE ±0°							

THIRD ANGLE PROJECTION

DO NOT SCALE

SEE MATH DATA

NX

DELPHI

DELPHI PACKARD ELECTRICAL/ELECTRONIC ARCHITECTURE
WARREN, OH

		DATE
DR		
APVD1	M. CIPRIANO	30JL07
APVD2	M. CIPRIANO	30JL07
APVD3	THOMAS PERSSON	30JL07
APVD4		
APVD5		

SUBSTANCES OF CONCERN HAS RECYCLED CONTENT PER DELPHI (DP4PD).

MATERIAL
POLYPROPYLENE COMPOUND BLACK

DRAWING NAME
MOUN CLIP CDT W/TUBE 19MM

DRAWING NUMBER							
13614177							
SIZE	SCALE	FORMAT	SHEET NO	SHEETS	REV	PLP	AA
A1x3	5:1	2 OF 2	1 OF 1	R	01	AA	

13614177

Mouser Electronics

Authorized Distributor

Click to View Pricing, Inventory, Delivery & Lifecycle Information:

Aptiv:
13614177