SYMBOL DEFINITION		
A DIMENSION WITHOUT AN INSPECTION REPORT SYMBOL ( ) DOES NOT REQUIRE INSPECTION. IT MAY BE CONTROLLED ON THE INDIVIDUAL COMPONENT DRAWING.	TOTAL NO OF INSPECTIONS REQUIRED	63
	LAST NO. USED	37

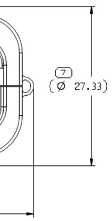

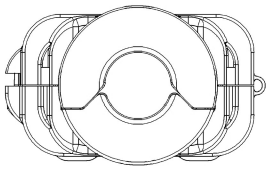

CLOSED END VIEW
10MM CONDUIT

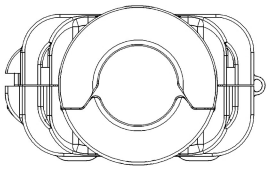

CLOSED END VIEW
13MM CONDUIT

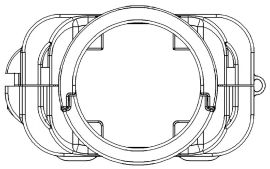

CLOSED END VIEW
NO CONDUIT

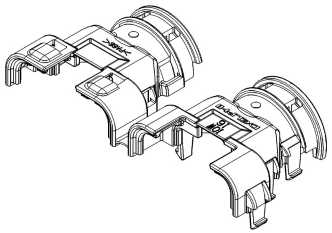

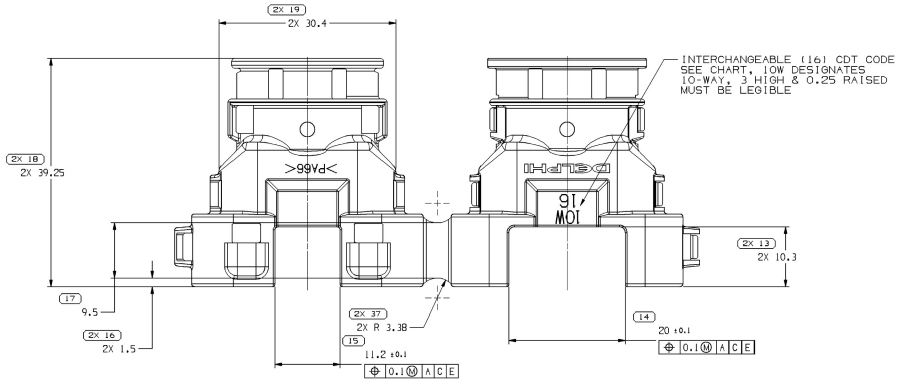

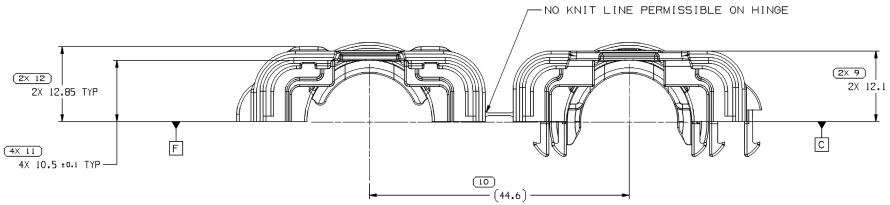

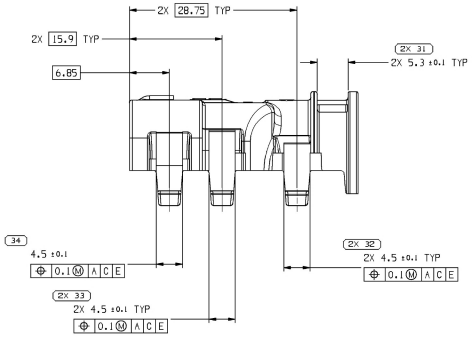

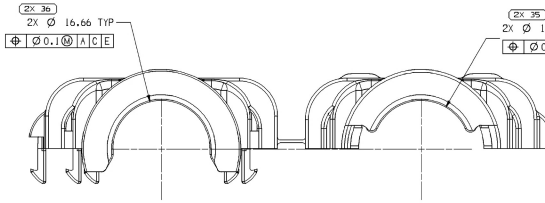

33321105
16MM CONDUIT

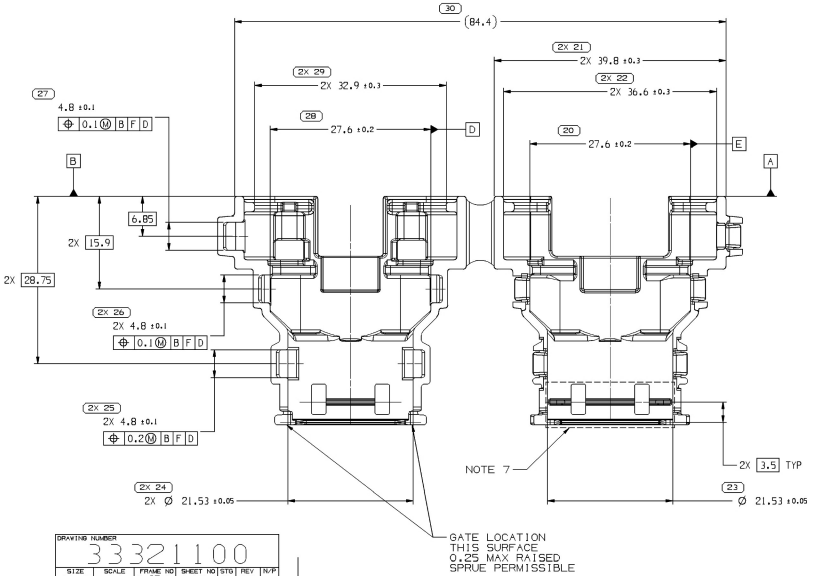

NOTES

1. UNLESS OTHERWISE SPECIFIED AND/OR INDICATED:

   DIMENSIONS ARE TO FACE OF VIEW SHOWN AND AUTOMATICALLY ROUNDED BY COMPUTER FOR INSPECTION (SEE MATH MODEL FOR PRECISE DIMENSIONS). FOR ALL OTHER DIMENSIONS NOT SHOWN BUT REQUIRED FOR TOOL BUILD, SEE MATH MODEL FOR PRECISE TOOL PATH DATA.

2. MATERIAL RECYCLING CODE PER ISO 11469, (1.5)X(1) CHARACTERS PA 66 LOCATED ON ANY EXTERIOR SURFACE.

3. THIS PRODUCT IS NOT CATEGORIZED AS AN APPEARANCE ITEM, MINOR IMPERFECTIONS INCLUDING, BUT NOT LIMITED TO, FLOW MARKS, COLOR BLEMISHES, GATE VESTIGE, AND SOFT FLASH THAT DO NOT AFFECT THE FIT, FORM, OR FUNCTION OF THE PART ARE PERMISSIBLE PER DPNP-4.7-CS-01.

4. REFERENCE MATING COMPONENTS OR EQUIVALENT:

   SEE 15316895(H59005) & 15425612(H59015) ASSEMBLY DRAWINGS

5. (1.5)X(1) DELPHI CORPORATE BRAND TO BE LOCATED ON ANY EXTERIOR SURFACE, PREFERABLY VISIBLE AT FINAL ASSEMBLY.

6. APEX 2.8 10-WAY MALE AND FEMALE WIRE DRESSCOVER

7. INTERCHANGEABLE TOOL FOR 10MM, 13MM, 16MM AND NO CONDUIT (CDT) OPTIONS

8. SEE ASSEMBLY MANUAL 33320150 FOR ADDITIONAL INFORMATION

9. ACCEPTANCE CRITERIA DEVIATIONS: 35 N min FOR BACKSHELL LOCKED RETENTION AT WIRE EXIT POINT. 50 N min FOR CONDUIT TO BACKSHE RETENTION. 80 N min FOR RETENTION OPPOSITE DIRECTION OF ENGAG POST MOISTURE. 100N min FOR CONNECTOR TO BACKSHELL RETENTION SIDE LOAD

PART NO	REV	N/P	CONDUIT SIZE mm	CODE	VOLUME CM³
33321105	04	AE	16 (M1889005)	16	5.883
33321104	04	AE	13 (M1889004)	13	5.974
33321103	04	AE	10 (M1889003)	10	6.031
33321102	04	-	NO CONDUIT	NO CODE	5.721

DRAWING NUMBER						
33321100						
SIZE	SCALE	FRAME NO	SHEET NO	STG	REV	N/P
A1x3	3:1	2 OF 1	1 OF 1	R	12	-

DIMENSIONAL RANGE (MM)				
FROM	>0	>20	>30	>70
TO	20	30	70	100
TOLERANCE UNLESS O				
±0.15	±0.2	±0.3	±0.4	
ANGULAR TO				

Mouser Electronics

Authorized Distributor

Click to View Pricing, Inventory, Delivery & Lifecycle Information:

Aptiv:
33321104