NOTE	DESCRIPTION
1	MALE CONNECTOR ACCORDING TO: - CONNECTOR TEMPERATURE CLASS : CLASS 3 (-40° C ; +125° C) - VIBRATION CLASS : CLASS 1 - SEALING CLASS : CLASS 2 IPX7 : TEMPORARY IMMERSION IN WATER UNDER 15cm ; 1000mb AT INITIAL / 500mb AFTER AGEING IN STATIC CONDITION ONLY - MATING CLASS : CLASS 3 MATING FORCE : 60 N MAX
2	APTIV PRODUCT SPECIFICATIONS : FE PS 17 010
3	USER'S MANUAL : PU245
4	PACKAGING DELIVERY CONDITION : SEE HANDLING MANUAL
5	DELIVERY CONNECTOR WEIGHT : 30± 5% g
6	FEMALE CONNECTOR DRAWING : 35329072-CUS04
7	- TEST TEMPERATURE : 125°C - SEALING AFTER AGEING IN STATIC CONDITION ONLY - INSULATION RESISTANCE : 100 MΩ MIN - APEX 2,8 FEMALE TERMINAL INSERTION FORCE : F = 25N MAX - APEX 2,8 FEMALE TERMINAL RETENTION FORCE : INITIAL 110 N MIN, AFTER AGEING 95N MIN - NO REWORK ALLOWED FOR DCS2 1,5 MALE TERMINAL, USE NEW TERMINAL AFTER EACH REMOVAL - WORST ENGAGING TEST UNDER 80 N - RETENTION FORCE ON THE DEVICE UNDER 120 N - CONNECTOR MATING FORCE : 70 N MAX
8	THE PRECONIZED SCREWING TORQUE PARTICIPATE TO A SECURITARY SEALING FEATURE
9	DIMENSION FOLLOWING NORM ISO10579-NR - SCREWING WITH 2 SCREWS - SCREWING TORQUE 8 Nm± 15% - MOUNTED ON INTERFACE DESCRIBED ABOVE

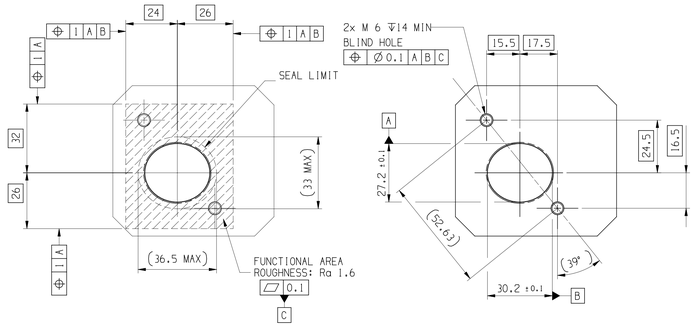

INTERFACE MATERIAL ADVISED :
ALUMINIUM ALLOY WITH LESS THAN 1% OF COPPER
SCREWS DEFINITION :
2x SCREWS M6-6x INTERNAL LOBES, 8.8 CLASS

DEFINITION OF THE INTERFACE — SCALE 1:1

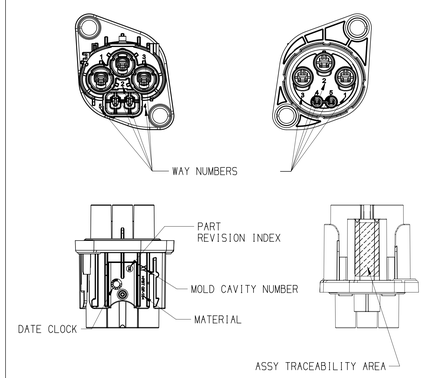

MARKING IDENTIFICATION — SCALE 1:1

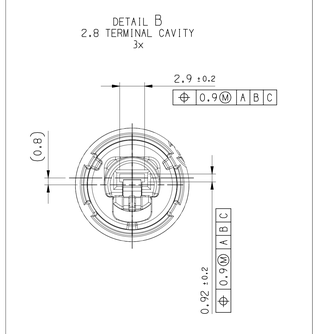

DETAIL CAVITY — SCALE 4:1

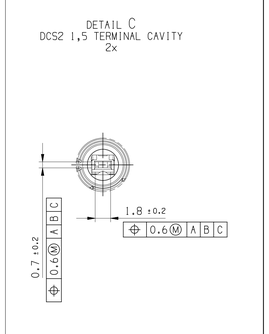

DETAIL CAVITY — SCALE 4:1

DWG STATUS					ZONE	REVISION HISTORY	AUTH	DR	APVD 1	APVD 2
DATE	STG	REV	N/P	CHG						
08JA21	R	01				INITIAL RELEASE		P.BAL	M.GUI	J.FAB

ADMISSIBLE WARPAGE

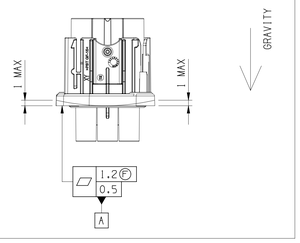

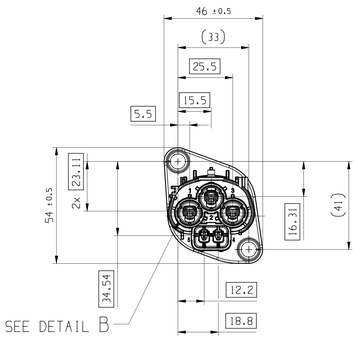

SECTION A-A

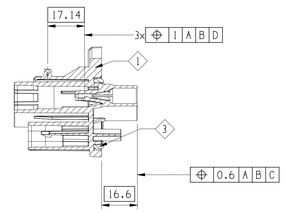

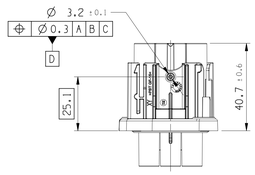

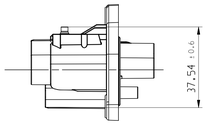

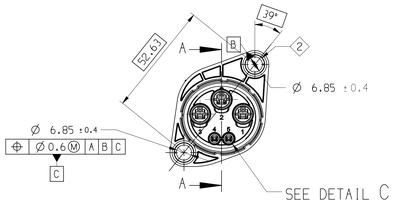

3D VIEW

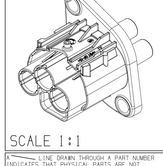

SCALE 1:1

A ——— LINE DRAWN THROUGH A PART NUMBER INDICATES THAT PHYSICAL PARTS ARE NOT AVAILABLE FOR ORDERING.

PART NUMBERS THAT DO NOT HAVE A LINE PRESENT INDICATE THAT PHYSICAL PARTS ARE AVAILABLE FOR ORDERING.

CONTACT APTIV SALES TO ASSURE AVAILABILITY OF PARTS.

LA LIGNE ——— TRACÉE SUR LA RÉFÉRENCE PIÈCE INDIQUE QUE LA PIÈCE N'EST PAS DISPONIBLE À LA COMMANDE

LES RÉFÉRENCES PIÈCES QUI NE SONT PAS BARRÉES INDIQUENT QUE CELLES-CI SONT DISPONIBLES PHYSIQUEMENT POUR ÊTRE COMMANDÉES

CONTACTER LE SERVICE COMMERCIAL DE APTIV POUR S'ASSURER DE LA DISPONIBILITÉ DES PIÈCES

R 0.1 MAX
R 0.2 MAX
SHARP CORNER TOLERANCE

DIM TO CHECK / COTES À VÉRIFIER / 1 DIM FOR HELP / COTES POUR INFO	DIMENSIONAL RANGE (MM) FROM	> 0	> 20	> 30	> 70	>100	>150	>200	>250	>300
	TO	20	30	70	100	150	200	250	300	400
	TOLERANCE UNLESS OTHERWISE SPECIFIED CHART E1									
THEORETIC DIM / COTES THEORIQUES		±0.15	±0.2	±0.3	±0.4	±0.5	±0.6	±0.8	±1	±1.2
	ANGULAR TOLERANCE ±2°									

DWG TYP: CUSTOMER PART DRAWING
WEIGHT (GR): SEE TABLE
VOLUME (CM³): ---
ROUTING:
DISTR CODE: D

UNLESS OTHERWISE SPECIFIED

GENERAL TOLERANCES ACCORDING TO:
±0.2
±0.5°

GD&T ACCORDING TO:
ISO 1101

REFERENCE

FIRST ANGLE PROJECTION

DO NOT SCALE
USE MATH DATA

•APTIV•

CONNECTION SYSTEMS
Chennai, India

COPYRIGHT 2021 APTIV. ALL RIGHTS RESERVED.

THIS DRAWING IS THE PROPERTY OF APTIV AND CONTAINS APTIV CONFIDENTIAL INFORMATION. THE REPRODUCTION, DISTRIBUTION AND UTILIZATION OF THIS DOCUMENT OR ITS RELATED CAD MATH DATA, AS WELL AS COMMUNICATION OF ANY CONTENT TO OTHERS, WITHOUT EXPRESS AUTHORIZATION, IS PROHIBITED.

CE PLAN EST LE PROPRIETE DE APTIV ET CONTIENT DES INFORMATIONS APTIV CONFIDENTIELLES. LA REPRODUCTION, LA DISTRIBUTION ET L'UTILISATION DE CE DOCUMENT OU DE SES DONNÉES MATHÉMATIQUES CAD, AINSI QUE LA COMMUNICATION DE TOUT CONTENU À AUTRUI, SANS AUTORISATION EXPRESSE EST INTERDITE

		DATE
DR	P.BALAJI	08JA21
APVD1	M.GUILLANTON	08JA21
APVD2	J.FABRE	08JA21
APVD3		
APVD4		
APVD5		

SUBSTANCES OF CONCERN AND RECYCLED CONTENT PER APTIV 10949001
MATIERES PROSCRITES ET CONTENU RECYCLABLE SELON APTIV 10949001

MATERIAL: SEE TABLE

DRAWING NAME: 3W APEX280 MALE CONNECTOR

DRAWING NUMBER: 35328058

SIZE	SCALE	FRAME NO	SHEET NO	STG	REV	N/P
A0	2:1	1 OF 1	1 OF 1	R	01	

ASSOCIATED PARTS (FOR INFORMATION)					
DESIGNATION	APTIV P/N	WIRE SECTION	EXTERNAL WIRE DIAMETER	SWS APTIV P/N	SWS COLOR
TINNED APEX280 MALE TERMINAL	15516298	6mm²	Ø 4.0 MINI - 4.3 MAXI	12186636	WHITE
			Ø 4.7 MINI - 4.9 MAXI	15324981	BLUE
DCS2 1.5 MALE TERMINAL GOLD PLATTED	33511802	0.35mm²	Ø 1.25 MINI - 1.35 MAXI	15441379	RED
	10779703	0.5mm²	Ø 1.4 MINI - 1.5 MAXI		
		1.0mm²	Ø 1.75 MINI - 1.9 MAXI	15441380	GREY

3W APEX 280 MALE CONNECTOR						
	3	INTERFACIAL SEAL	35328057	SILICONE	MEDIUM GREY	1
	2	M6 SPACER	33272652	STEEL	-	2
	1	HEADER HOUSING	35328056	PBT GF 15	ORANGE	1
	ITEM	DESCRIPTION	APTIV P/N	MATERIAL	COLOR	QUANTITY

BILL OF MATERIAL

User: G_EMS
Part: 35328058 (1994-5010)
Date: 2021-02-08 Time: 17:30:28
Model: 35328058 (1994-5010).prt Drawing: 35328058 (1994-5010).drw - 21

Mouser Electronics

Authorized Distributor

Click to View Pricing, Inventory, Delivery & Lifecycle Information:

Aptiv:

35328058