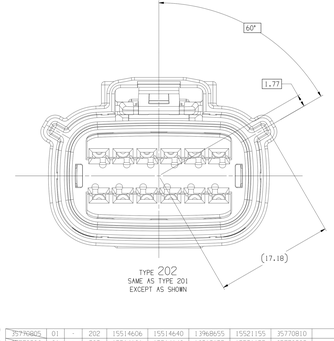

TYPE 202
SAME AS TYPE 201
EXCEPT AS SHOWN

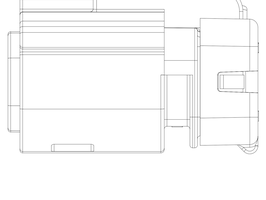

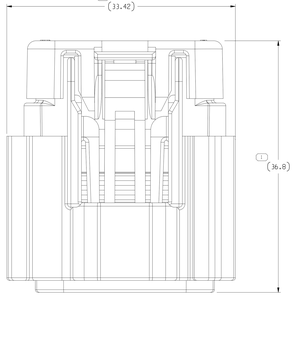

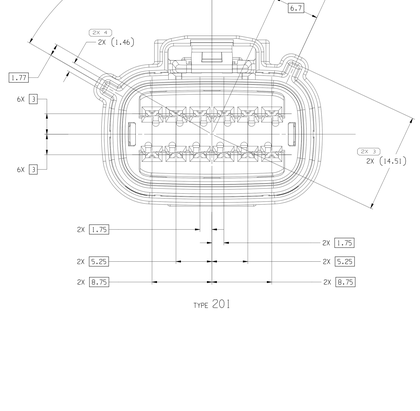

TYPE 201

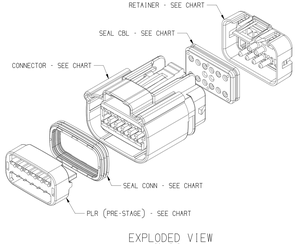

EXPLODED VIEW
SCALE 2:1

SYMBOL DEFINITION		MISSING SYMBOLS
A DIMENSION WITHOUT AN INSPECTION REPORT SYMBOL DOES NOT REQUIRE INSPECTION. IT MAY BE CONTROLLED ON THE INDIVIDUAL COMPONENT DRAWING.	TOTAL NO OF INSPECTIONS REQUIRED: 9	NO MISSING SYMBOL NUMBER
	LAST NO. USED: 7	

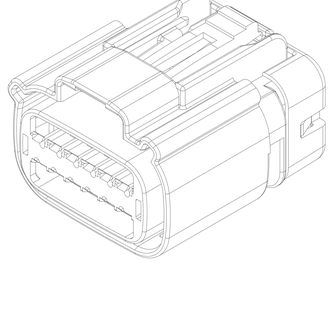

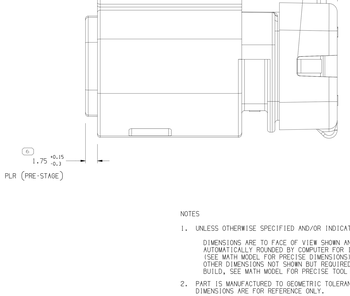

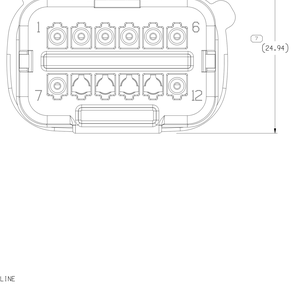

PART NO	REV	N/P	TYPE	CONNECTOR	PLR	SEAL CONN	SEAL CBL	RETAINER	USCAR OPTION	1	2	3	4	5	6	7	8	9	10	11	12	BLOCKED CAVITIES
15770805	01	-	202	1551466A	1551464D	1398655	1552115S	1577081O	A	-	-	X	-	-	-	-	-	X	-	-	-	2
15770801	01	-	202	1551466A	1551464D	1398655	1552115S	1577080R	A	-	-	-	-	-	-	-	-	X	X	-	-	3
15773812	01	-	202	1551466A	1551464D	1398655	1552115S	1573789O	A	-	-	-	X	X	X	X	-	-	X	X	-	7
15709908	01	AA	201	1551468B	1551464D	1398655	1552115S	1570988T	B	X	-	-	-	X	X	-	-	-	-	-	X	4
15696473	01	-	201	1551468B	1551464D	1398655	1552115S	1569646Q	B	-	-	-	-	-	-	-	-	-	-	-	-	2
15690491	01	AA	202	1551466A	1551464D	1398655	1552115S	1569048J	A	-	X	X	X	X	X	-	-	-	X	X	-	7
15685951	01	AA	202	1551466A	1551464D	1398655	1552115S	1568595O	A	-	X	X	X	-	-	-	-	-	-	-	-	3
15685949	01	AA	202	1551466A	1551464D	1398655	1552115S	1568594R	A	-	-	X	X	-	-	-	-	-	-	X	-	3
15662541	01	AA	202	1551466A	1551464D	1398655	1552115S	1566254O	A	-	X	-	-	-	-	-	-	-	-	X	-	2
15659179	01	AA	202	1551466A	1551464D	1398655	1552115S	1553474P	A	-	-	X	X	-	-	-	-	-	-	-	-	2
15659177	01	AA	202	1551466A	1551464D	1398655	1552115S	1559176R	A	-	X	X	X	-	-	-	-	-	-	X	-	4
15659175	01	AA	202	1551466A	1551464D	1398655	1552115S	1559174R	A	-	X	X	X	-	-	X	X	-	-	-	-	6
15659173	01	AA	202	1551466A	1551464D	1398655	1552115S	1559172R	A	-	-	X	X	X	X	X	X	X	X	-	X	10
15559171	01	-	202	1551466A	1551464D	1398655	1552115S	1559170R	A	X	-	X	X	X	X	X	X	X	X	X	-	10
15659169	01	AA	202	1551466A	1551464D	1398655	1552115S	1559168R	A	-	X	-	-	-	-	-	-	-	-	-	-	4
15659167	01	AA	202	1551466A	1551464D	1398655	1552115S	1559166R	A	-	X	-	-	X	X	X	X	X	X	-	X	8
15657346	01	AA	202	1551466A	1551464D	1398655	1552115S	1557345R	A	-	-	X	-	-	-	-	-	-	-	-	-	1
15649530	01	AA	202	1551466A	1551464D	1398655	1552115S	1549528R	A	-	X	-	-	-	-	-	-	-	-	-	-	1
15644029	01	AA	202	1551466A	1551464D	1398655	1552115S	1544402R	A	-	-	X	X	X	X	-	-	-	X	X	-	6
15630342	01	AA	202	1551466A	1551464D	1398655	1552115S	1563033R	A	X	X	-	X	X	-	-	-	-	-	-	X	5
15630341	01	AA	202	1551466A	1551464D	1398655	1552115S	1563013R	A	X	X	-	X	X	X	X	X	X	X	-	X	10
15630340	01	AA	202	1551466A	1551464D	1398655	1552115S	1563033T	A	X	X	-	-	-	-	-	-	-	-	-	X	3
15635346	01	-	201	1551468B	1551464D	1398655	1552115S	1563534S	B	X	X	X	X	-	-	X	X	X	-	-	X	7
15635344	01	-	201	1551468B	1551464D	1398655	1552115S	1563534J	B	X	X	X	X	X	X	-	-	-	-	-	X	8
15635342	01	-	201	1551468B	1551464D	1398655	1552115S	1563534I	B	X	X	X	X	X	X	X	-	-	X	X	X	10
15635340	01	-	201	1551468B	1551464D	1398655	1552115S	1563533P	B	-	-	-	-	-	X	X	-	-	X	X	X	5
15635338	01	-	201	1551468B	1551464D	1398655	1552115S	1563533T	B	-	-	-	-	-	X	X	X	X	X	X	X	7
15635336	01	-	201	1551468B	1551464D	1398655	1552115S	1563533S	B	-	-	X	-	-	-	-	-	X	-	-	-	2
15635334	01	-	201	1551468B	1551464D	1398655	1552115S	1541014R	B	-	-	-	-	-	-	-	-	X	-	-	-	1
15635331	01	-	202	1551466A	1551464D	1398655	1552115S	1563533Z	A	-	X	X	X	X	X	-	-	-	-	-	X	7
15635311	01	-	202	1551466A	1551464D	1398655	1552115S	1563533O	A	X	X	X	-	-	-	X	X	X	X	X	X	10
15635329	01	-	202	1551466A	1551464D	1398655	1552115S	1563532R	A	X	-	-	-	-	-	-	-	X	-	-	-	2
15635327	01	-	202	1551466A	1551464D	1398655	1552115S	1563532N	A	X	-	-	-	-	-	-	-	-	-	-	-	1
15635325	**01**	-	**202**	1551466A	1551464D	1398655	1552115S	**1563532M**	**A**	-	-	-	-	-	-	X	-	-	-	-	-	**1**
15635323	**01**	-	**202**	1551466A	1551464D	1398655	1552115S	**1563532L**	**A**	-	-	-	-	-	-	X	-	X	-	-	-	**2**
15625946	01	AA	202	1551466A	1551464D	1398655	1552115S	1562594N	A	X	X	X	X	-	-	-	-	-	X	X	X	7
15617011	01	-	202	1551466A	1551464D	1398655	1552115S	1561707Z	A	-	-	-	-	X	-	-	-	X	X	X	X	6
15617010	01	-	202	1551466A	1551464D	1398655	1552115S	1561707O	A	-	-	-	-	-	-	X	X	X	-	X	X	4
15617009	01	-	202	1551466A	1551464D	1398655	1552115S	1561706Y	A	-	-	-	-	-	-	X	X	X	X	X	X	6
15514635	01	-	202	1551466A	1551464D	1398655	1552115S	1551463S	A	X	X	X	X	X	X	X	X	X	X	X	X	12
15607300	01	AA	202	1551466A	1551464D	1398655	1552115S	1560729K	A	-	-	-	X	X	-	X	X	X	X	-	-	6
15607298	01	AA	202	1551466A	1551464D	1398655	1552115S	1560729S	A	-	-	-	X	-	-	-	-	-	X	X	-	3
15589643	01	AA	201	1551468B	1551464D	1398655	1552115S	1558964Z	B	X	X	-	-	-	-	X	X	X	X	X	-	7
15589639	01	AA	201	1551468B	1551464D	1398655	1552115S	1558963S	B	-	-	-	-	-	X	X	X	X	X	-	-	4
15498705	01	-	202	1551466A	1551464D	1398655	1552115S	1549870S	A	-	-	X	X	X	X	-	-	X	X	X	-	7
15488209	01	-	202	1551466A	1551464D	1398655	1552115S	1548820Y	A	X	X	-	-	-	-	X	X	-	-	-	-	4
15488308	01	-	202	1551466A	1551464D	1398655	1552115S	1548830R	A	-	X	-	-	-	-	X	X	-	-	-	-	3
15485862	01	AA	202	1551466A	1551464D	1398655	1552115S	1548585K	A	X	-	-	-	-	-	-	-	X	X	-	-	3
15464994	01	-	202	1551466A	1551464D	1398655	1552115S	1546499M	A	-	X	X	-	-	-	-	-	-	-	X	-	3
15464989	01	-	202	1551466A	1551464D	1398655	1552115S	1546498Y	A	-	X	X	-	X	-	-	-	-	-	X	-	4
15464988	01	-	202	1551466A	1551464D	1398655	1552115S	1546498R	A	X	X	X	-	-	-	-	-	X	-	X	-	5
15464987	01	-	202	1551466A	1551464D	1398655	1552115S	1546498T	A	X	X	-	-	X	-	-	-	X	-	X	-	6
15464985	01	-	202	1551466A	1551464D	1398655	1552115S	1546498S	A	X	X	X	X	X	-	-	-	-	X	X	-	8
15480142	01	-	202	1551466A	1551464D	1398655	1552115S	1548014Z	A	-	-	-	-	X	-	-	X	X	-	-	-	3
15411370	01	-	202	1551466A	1551464D	1398655	1552115S	1541137O	A	-	-	-	-	-	-	-	-	-	-	X	X	2
15410146	01	-	202	1551466A	1551464D	1398655	1552115S	1541014R	A	-	-	-	-	-	-	-	X	X	-	-	-	2
15410147	01	-	202	1551466A	1551464D	1398655	1552115S	1541014T	A	-	X	X	X	X	-	X	X	X	X	X	-	8
15410149	01	-	202	1551466A	1551464D	1398655	1552115S	1541014V	A	X	X	-	-	-	-	X	X	X	X	X	X	8
15410150	01	-	202	1551466A	1551464D	1398655	1552115S	1541015R	A	-	X	-	-	-	-	X	X	X	X	X	X	7
15410151	01	-	202	1551466A	1551464D	1398655	1552115S	1541015T	A	-	-	-	-	-	X	-	X	X	X	-	-	4
15410148	01	-	202	1551466A	1551464D	1398655	1552115S	1541014Q	A	-	-	-	-	-	-	-	-	-	-	X	-	1
15201342	01	-	202	1551466A	1551464D	1398655	1552115S	1520134Z	A	-	-	X	-	X	-	-	-	-	X	X	-	5
15290503	01	-	202	1551466A	1551464D	1398655	1552115S	1529050J	A	X	X	X	X	X	-	-	-	-	X	-	X	7
15276184	01	AB	202	1551466A	1551464D	1398655	1552115S	1527618M	A	-	-	-	-	-	-	-	-	X	-	-	-	1
15250593	01	AA	202	1551466A	1551464D	1398655	1552115S	1525059J	A	-	-	-	-	X	X	X	-	-	-	X	X	5
15250592	01	AA	202	1551466A	1551464D	1398655	1552115S	1525059Z	A	-	-	-	-	X	X	X	-	-	X	X	X	5
15249164	01	AA	202	1551466A	1551464D	1398655	1552115S	1524916A	A	-	-	-	-	-	-	-	-	-	-	X	-	1
15249163	01	AA	202	1551466A	1551464D	1398655	1552115S	1524916J	A	X	X	-	-	-	-	-	-	X	X	X	X	6
15249162	01	AA	202	1551466A	1551464D	1398655	1552115S	1524916Z	A	-	-	X	X	X	-	-	-	-	-	-	-	3
15249160	01	AA	202	1551466A	1551464D	1398655	1552115S	1524916O	A	-	-	-	-	-	-	-	-	-	-	X	-	1
15249159	01	AA	202	1551466A	1551464D	1398655	1552115S	1524915R	A	X	X	-	-	-	-	-	-	-	-	X	-	5
15249158	01	AA	202	1551466A	1551464D	1398655	1552115S	1524915R	A	-	-	-	-	-	X	-	X	X	X	-	X	5
15249157	01	AA	202	1551466A	1551464D	1398655	1552115S	1524915T	A	X	X	-	-	-	-	X	X	X	X	X	X	9
15242528	01	AB	201	1551468B	1551464D	1398655	1552115S	1524252B	B	-	-	-	-	-	-	-	-	X	X	X	X	4
15242421	01	AA	201	1551468B	1551464D	1398655	1552115S	1524242Z	B	-	-	-	-	-	-	-	X	X	X	X	-	4

PLUGGED BLOCKED CIRCUITS POSITION

DWG STATUS DATE	STS	REV	N/P	DWG	ZONE	REVISION HISTORY	AUTH	DR	APVD	APVD
19OC17	R	01	-	-	-	ALL PARTS - RELEASED PART DRAWING	438050	MF	MF	MJN
05SE18	R	02	-	-	-	3514252G - REVISED TYPE TO 201 ACCORDING TO USCAR CODE1. 3529065-71,3529569-70 - RELEASED	440746	AHD	AHD	JIE
09AU18	R	03	-	-	-	3527618S - RELEASED	441511	DAV	JAA	JC
22FE19	R	04	-	-	-	3529050Z - RELEASED	442536	JOC	JAA	AHD
19JN19	R	05	-	-	-	ALL PARTS - ADDED "OPEN CAVITY VERSIONS" & "ASSEMBLIES WITH CPA" NOTES	443137	JLL	DSP	DSP
02JL19	R	06	-	-	-	3520134J - RELEASED	443641	DAV	CVV	DSP
13JA20	R	07	-	-	-	3541013B-4G, 3541014J-4S, 3541078H - RELEASED	550479	JLL	JAA	JAF
19MR20	R	08	-	-	-	3541013B, 3541014A-4S - UPDATED PART AVAILABILITY	551315	LOC	JAA	JCA
30JL20	R	09	-	-	-	3548014J - RELEASED	551946	EVV	EVV	SV
21AU20	R	10	-	-	-	3527618S - UPDATED PART AVAILABILITY	552324	AHY	JAA	SV
24AU20	R	11	-	-	-	3546509J,10,12-14, 3549586Z, 3548831U,11 - RELEASED	552305	AHY	JAA	SV
30SE20	R	12	-	-	-	3541013V-4G & 3541014J - UPDATED PART AVAILABILITY	552534	LOC	JAA	SV
19OC20	R	13	-	-	-	3549870G - RELEASED	552749	AHY	JAA	SV
09FE21	R	14	-	-	-	3546501G & 3549586Z - UPDATED PART AVAILABILITY	553510	GDH	JDM	SV
27AU21	R	15	-	-	-	3558963V & 3558964J - RELEASED	555003	LOC	JAA	SV
05OC21	R	16	-	-	-	3560729B & 3560730O - RELEASED	555499	AGC	AGC	SV
22DE21	R	17	-	-	-	3561703J,08-11, 3562594Y - RELEASED	555961	LOD	EVV	SV
05JA22	R	18	-	-	-	3560729B & 3560730O - UPDATED PART AVAILABILITY	556140	EZJ	COD	SV
14JA22	R	19	-	-	-	3562523J, 25, 27, 29, 31, 33, 34, 36, 38, 40, 42, 44, 46, 3563934Z-42 - RELEASED	556216	GDH	JAA	SV
15JA22	R	20	-	-	-	3564402G & 3564053O - RELEASED	556603	ESG	JAA	SV
04MR22	R	21	-	-	-	3548014J, 3558963V, 3558964J, 3562594Y, 3563934Z - 42, 3564402G & 3564053O - UPDATED PART AVAILABILITY (PN'S WERE NOT AVAILABLE)	556655	MLR	JAA	SV
04MR22	R	22	-	-	-	3565734G, 3565916T, 69, 71, 73, 75, 77, 79 - RELEASED	556996	MLR	JAA	SV
18APR22	R	23	-	-	-	3566254Y - RELEASED	557144	ESG	JAA	SV
27APR22	R	24	-	-	-	3565734G - UPDATED PART AVAILABILITY (PN WAS NOT AVAILABLE)	557217	JOC	JAA	SV
22JN22	R	25	-	-	-	3568994V & 3568995Y - RELEASED	557822	GDH	JAA	SV
07JL22	R	26	-	-	-	3569049Y - RELEASED	558003	GDH	JAA	SV
15JL22	R	27	-	-	-	3565916T, 3565916Q, 3565917J, 3565917S, 3565917T, 3566254Y, 3568994V & 3568995Y - UPDATED PART AVAILABILITY (PN'S WERE NOT AVAILABLE)	557807	ESG	MLR	SV
15SE22	R	28	-	-	-	3569647J - RELEASED	558193	GLE	GLE	SV
10OC22	R	29	-	-	-	3570990R - RELEASED	558568	ESG	JAA	SV
03NO22	R	30	-	-	-	3570990R - UPDATED PART AVAILABILITY (PN WAS NOT AVAILABLE)	558913	MLR	JAA	SV
29NO22	R	31	-	-	-	3569049J & 3541078H - UPDATED PART AVAILABILITY (PN'S WERE NOT AVAILABLE)	559015	GDH	JOO	SV
03JA23	R	32	-	-	-	3573813J - RELEASED	559289	MLR	JAA	MFA
18APR23	R	33	-	-	-	3577080J, 3577080S - RELEASED	560129	GDH	JAA	MFA

NOTES

1. UNLESS OTHERWISE SPECIFIED AND/OR INDICATED:

   DIMENSIONS ARE TO FACE OF VIEW SHOWN AND AUTOMATICALLY ROUNDED BY COMPUTER FOR INSPECTION (SEE MATH MODEL FOR PRECISE DIMENSIONS). FOR ALL OTHER DIMENSIONS NOT SHOWN BUT REQUIRED FOR TOOL BUILD, SEE MATH MODEL FOR PRECISE TOOL PATH DATA.

2. PART IS MANUFACTURED TO GEOMETRIC TOLERANCES. CENTERLINE DIMENSIONS ARE FOR REFERENCE ONLY.
3. SEALING CODE 4 - DESIGN WILL MEET REQUIREMENTS OF SAE/USCAR-2 CONNECTOR SYSTEM ENVIRONMENTAL TEST FLOWCHART (PRESSURE/VACUUM AND SUBMERSION).
4. THIS PRODUCT IS NOT CATEGORIZED AS AN APPEARANCE ITEM. MINOR IMPERFECTIONS (INCLUDING, BUT NOT LIMITED TO, FLOW MARKS, COLOR BLEMISHES, GATE VESTIGE, AND SOFT FLASH THAT DO NOT AFFECT THE FIT, FORM, OR FUNCTION OF THE PART ARE PERMISSIBLE PER EXNP_4-3.CS.01.EN.
5. FOR APPLICATION DATA SEE THE INDIVIDUAL APPLICATION DRAWINGS.
6. ASSEMBLY TO BE USED WITH APPROPRIATE APTIV HOLDER DESIGN.
7. ASSEMBLY TO BE PROCESSED USING APTIV CONNECTION SYSTEMS BEST PRACTICE METHODS AND/OR CONNECTOR ASSEMBLY INSTRUCTIONS AND APPLICABLE REPAIR PROCEDURES.
8. BEFORE TERMINAL ASSEMBLY: VERIFY THAT PLR IS IN THE PRE-STAGE POSITION ON THE CONNECTOR. IF NOT: RETURN PLR TO PRE-STAGE POSITION.
9. FOR ALL SPECIFIC REQUIREMENTS SEE SHEET 1
10. FOR ALL OPEN CAVITY VERSIONS SEE SHEET 1
11. FOR ASSEMBLIES WITH CPA SEE DRAWING 1551463Z

DRAWING NUMBER	1553213 7
SHEET	A1x3
SCALE	5:1
CHANGE NO	2 OF 2
SHEET NO OF	2 OF
REQ	R
NO	33
N/P	-

PART NUMBER: 1553213 7 REV: 01 TYPE: 202 CONNECTOR: 1551466A PLR: 1551464D SEAL CONN: 1398655 SEAL CBL: 1552115S RETAINER: 1573810 USCAR OPTION: A Date: 25-Apr-23 Time: 07:25:58

⚠	USE DRAWN TYPEDEF & PART NUMBER INDICATES THAT PHYSICAL PARTS ARE NOT AVAILABLE FOR ORDERING. PART NUMBER THAT DO NOT HAVE A LINE PRESENT INDICATE THAT PHYSICAL PARTS ARE AVAILABLE FOR ORDERING. CONTACT APTIV SALES TO ASSURE AVAILABILITY OF PARTS.
DWG TYPE	PART DRAWING
STATE	
VOLUME CHG	SEE CHART
SYSTEM CODE	
UNLESS OTHERWISE SPECIFIED	THIS DOCUMENT IS IN ACCORDANCE WITH ASME Y14.5M-1994 UNLESS OTHERWISE SPECIFIED. GENERAL TOLERANCE ASSOCIATED WITH SEPARATE PATTERNS OF FEATURES MAY BE GAGED SEPARATELY REGARDLESS OF DATUM REFERENCES.
ALL DIMENSIONS ARE IN MILLIMETERS	
⚠	PROCESS SENSITIVE DIMENSION
REFERENCE	DIMENSIONS ENCLOSED IN ( ) INDICATE REFERENCE DIMENSIONS AND NO TOLERANCE IS TO BE ESTABLISHED.
DIMENSIONAL RANGE (MM)	0-6 / >6-30 / >30-120 / >120-400 / >400-1000 / >1000-2000 / >2000-4000 / >4000-8000
TOLERANCE UNLESS OTHERWISE SPECIFIED	±0.05 / ±0.10 / ±0.15 / ±0.20 / ±0.30 / ±0.50 / ±0.75 / ±1.00
ANGULAR	±1°0'0" / ±0°30'0" / ±0°15'0" / ±0°10'0" / ±0°5'0" / ±0°3'0" / ±0°2'0" / ±0°1'0"
THIRD ANGLE PROJECTION	
DO NOT SCALE	
USE MATH DATA	
NX	

APTIV
CONNECTION SYSTEMS
WARREN, OH

COPYRIGHT 2017 APTIV, ALL RIGHTS RESERVED.
THIS DRAWING IS THE PROPERTY OF APTIV AND CONTAINS APTIV CONFIDENTIAL INFORMATION. NEITHER THIS DOCUMENT NOR THE INFORMATION IT CONTAINS OR ITS RELATED DATA WITH DATA, MAY BE USED OR COMMUNICATED OR ANY CONTENT TO OTHERS, WITHOUT EXPRESS AUTHORIZATION, IS PROHIBITED.

		DATE
DR		
APVD	IVAN MACIAS	19OC17
APVD	IVAN MACIAS	19OC17
APVD	MAURICIO JIMENEZ	19OC17
APVD		
APVD		
SUBSTANCES OF CONCERN AND RECYCLED CONTENT PER APTIV CEMPOSS		
VOLUME CHG	SEE CHART	
DRAWING NAME	TAXI ASM CONN 12 F OCS 1.5 SLD	
DRAWING NUMBER	1553213 7	
SIZE	A1x3	
SCALE	5:1	
CHANGE NO	2	
SHEET NO	2 OF 2	
REQ	R	
NO	33	
N/P	-	

Mouser Electronics

Authorized Distributor

Click to View Pricing, Inventory, Delivery & Lifecycle Information:

Aptiv:

35685951