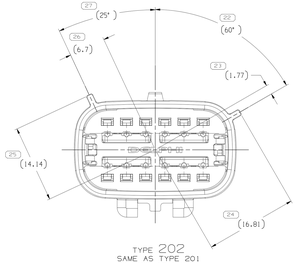

TYPE 202
SAME AS TYPE 201
EXCEPT AS SHOWN

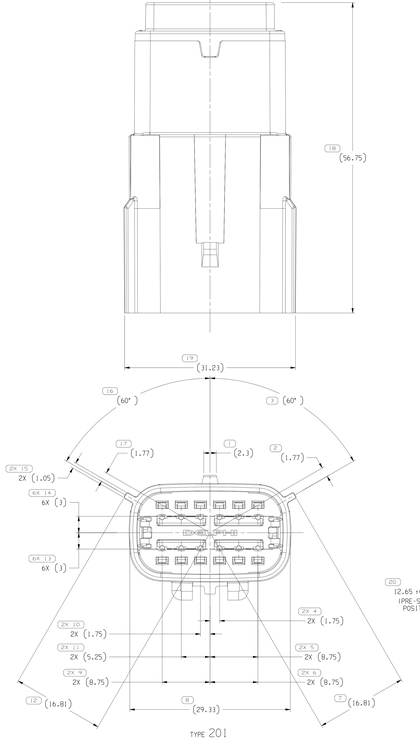

TYPE 201

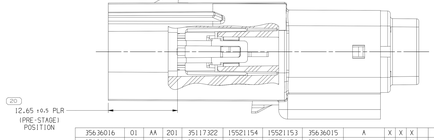

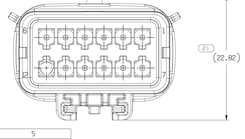

35636016	01	AA	201	35117322	15521154	15521153	35636015	A		X	X	X				X	X									5
35636014	01	AA	201	35117322	15521154	15521153	35636013	A				X														1
35635354	01	AA	202	35117323	15521154	15521153	35635353	B				X				X										2
35635352	01	AA	202	35117323	15521154	15521153	35635351	B		X	X	X				X	X	X	X				X			7
35635350	01	AA	202	35117323	15521154	15521153	35635349	B								X						X	X			3
35635348	01	AA	202	35117323	15521154	15521153	35635347	B		X	X	X	X	X		X						X	X			8
35617419	01	-	201	35117322	15521154	15521153	35617080	A			X	X	X	X	X											5
35617418	01	-	201	35117322	15521154	15521153	35617079	A		X	X	X	X	X	X								X			8
35617417	01	-	201	35117322	15521154	15521153	35617078	A			X		X	X			X		X	X						6
35617416	01	-	201	35117322	15521154	15521153	35617077	A			X		X													2
35617415	01	-	201	35117322	15521154	15521153	35617076	A										X	X	X	X					4
35617414	01	-	201	35117322	15521154	15521153	35617075	A													X					1
35617413	01	-	201	35117322	15521154	15521153	35617074	A						X	X	X	X	X	X	X	X	X	X			8
35617412	01	-	201	35117322	15521154	15521153	35617073	A		X	X	X	X			X	X	X	X							8
35589634	01	AA	202	35117323	15521154	15521153	35589632	B		X	X					X	X	X	X			X				7
35589631	01	AA	202	35117323	15521154	15521153	35589630	B								X	X	X	X							4
35589629	01	AA	201	35117322	15521154	15521153	35589628	A		X						X	X					X				5
35548966	01	AA	202	35117323	15521154	15521153	35276182	B														X				1
35544555	01	AA	201	35117322	15521154	15521153	35544553	A						X			X	X	X							4
35538265	01	AA	201	35117322	15521154	15521153	35538264	A						X						X	X	X				4
35494610	01	AA	201	35117322	15521154	15521153	35494607	A			X						X	X								3
35494608	01	AA	201	35117322	15521154	15521153	35494605	A		X	X						X	X								4
35480127	01	AA	201	35117322	15521154	15521153	35426760	A												X	X	X				3
35465006	01	-	201	35117322	15521154	15521153	35464984	A					X	X			X			X	X	X	X			6
35465005	01	AA	201	35117322	15521154	15521153	35464983	A		X									X	X						3
35465004	01	-	201	35117322	15521154	15521153	35464982	A					X	X				X								4
35465003	01	AB	201	35117322	15521154	15521153	35464981	A						X								X				2
35425182	01	AA	201	35117322	15521154	15521153	35425192	A					X	X			X	X	X	X						6
35425181	01	AA	201	35117322	15521154	15521153	35425191	A					X						X	X						3
35425180	01	AA	201	35117322	15521154	15521153	35425187	A		X	X	X								X						5
35425179	01	AA	201	35117322	15521154	15521153	35425186	A			X	X		X								X				4
35425177	01	AA	201	35117322	15521154	15521153	35425184	A		X	X	X		X					X			X				6
35425178	01	AA	201	35117322	15521154	15521153	35425183	A			X	X										X				3
35410785	01	AA	201	35117322	15521154	15521153	35411372	A													X	X				2
35250590	01	AB	201	35117322	15521154	15521153	15514593	A		X	X	X	X	X	X	X	X	X	X	X	X	X	X			12
35250589	01	AA	201	35117322	15521154	15521153	35250595	A		X						X	X	X	X	X						6
35296588	01	AA	201	35117322	15521154	15521153	35250594	A					X		X		X									3
35294064	01	AA	201	35117322	15521154	15521153	35249155	A						X					X		X					3
35294063	01	AA	201	35117322	15521154	15521153	35249154	A		X	X			X					X	X	X	X				7
35294062	01	AA	201	35117322	15521154	15521153	35249153	A				X	X	X												3
35294061	01	AA	201	35117322	15521154	15521153	35249151	A						X												1
35294060	01	AA	201	35117322	15521154	15521153	35249150	A		X	X			X						X		X				5
35294059	01	AA	201	35117322	15521154	15521153	35249149	A						X		X	X	X		X						5
35294058	01	AA	201	35117322	15521154	15521153	35249147	A		X	X			X		X	X	X	X	X	X					9
35305666	01	AB	201	35117322	15521154	15521153	35305669	A									X	X								2
35305665	01	AB	201	35117322	15521154	15521153	35305668	A										X								1
35305663	01	AB	201	35117322	15521154	15521153	35305667	A				X	X	X	X			X								8
35276204	01	AB	201	35117322	15521154	15521153	35276183	A		X		X						X					X			4
35276093	01	AB	201	35117322	15521154	15521153	35276182	A															X			1
PART NO	REV	N/P	TYPE	CONNECTOR	PLR	SEAL CBL	RETAINER	USCAR OPTION	1	2	3	4	5	6	7	8	9	10	11	12						TOTAL BLOCKED CAVITIES
									PLUGGED BLOCKED CIRCUITS POSITIONS																	

35758560	01	-	201	35117322	15521154	15521153	35758559	A		X		X	X	X	X	X	X	X		X						10
35738129	01	-	201	35117322	15521154	15521153	35738130	A					X	X	X	X	X		X	X						7
35738414	01	-	202	35117323	15521154	15521153	35682591	B				X						X								2
35690490	01	AA	201	35117322	15521154	15521153	35690482	A					X	X	X	X	X	X	X	X	X					9
35690489	01	AA	201	35117322	15521154	15521153	35690481	A						X			X	X		X						4
35690488	01	AA	201	35117322	15521154	15521153	35690480	A			X	X	X	X	X				X	X						7
35690487	01	AA	201	35117322	15521154	15521153	35690478	A			X															1
35682597	01	-	201	35117322	15521154	15521153	35682591	A					X					X								2
35676210	01	AA	201	35117322	15521154	15521153	35676207	A		X	X									X		X				3
35644062	01	AA	202	35117323	15521154	15521153	35644060	B						X	X			X								4
PART NO	REV	N/P	TYPE	CONNECTOR	PLR	SEAL CBL	RETAINER	USCAR OPTION	1	2	3	4	5	6	7	8	9	10	11	12						TOTAL BLOCKED CAVITIES
									PLUGGED BLOCKED CIRCUITS POSITIONS																	

DRAWING NUMBER: 35117334						
SIZE	SCALE	FORMAT NO	SHEET NO	OF NO	REV	N/P
A1x3	4:1	2 OF 2	2	OF	R	31

SYMBOL DEFINITION

A DIMENSION WITHOUT AN INSPECTION REPORT SYMBOL DOES NOT REQUIRE INSPECTION. IT MAY BE CONTROLLED ON THE INDIVIDUAL COMPONENT DRAWING.

TOTAL NO OF INSPECTIONS REQUIRED	44
LAST NO. USED	27

MISSING SYMBOLS

NO MISSING SYMBOL NUMBER

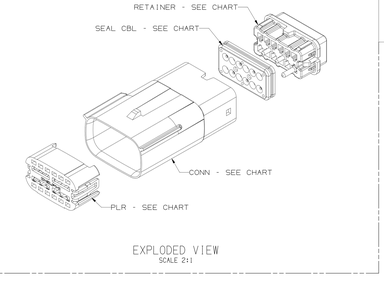

EXPLODED VIEW
SCALE 2:1

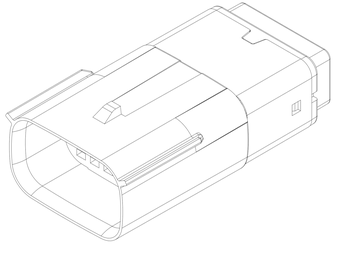

NOTES

1. UNLESS OTHERWISE SPECIFIED AND/OR INDICATED:
   DIMENSIONS ARE TO FACE OF VIEW SHOWN AND AUTOMATICALLY ROUNDED BY COMPUTER FOR INSPECTION (SEE MATH MODEL FOR PRECISE DIMENSIONS). FOR ALL OTHER DIMENSIONS NOT SHOWN BUT REQUIRED FOR TOOL BUILD, SEE MATH MODEL FOR PRECISE TOOL PATH DATA.

2. THIS PRODUCT IS NOT CATEGORIZED AS AN APPEARANCE ITEM. MINOR IMPERFECTIONS INCLUDING, BUT NOT LIMITED TO, FLOW MARKS, COLOR BLEMISHES, GATE VESTIGE, AND SOFT FLASH THAT DO NOT AFFECT THE FIT, FORM, OR FUNCTION OF THE PART ARE PERMISSIBLE PER EANP.4-3.CS.01.EN.

3. FOR APPLICATION DATA SEE THE INDIVIDUAL APPLICATION DRAWINGS.

4. BEFORE TERMINAL ASSEMBLY: VERIFY THAT PLR IS IN THE PRE-STAGE POSITION ON THE CONNECTOR. IF NOT: RETURN PLR TO PRE-STAGE POSITION.

5. FOR ALL SPECIFIC REQUIREMENTS SEE SHEET 1.

6. SEALING CODE 3 - DESIGN WILL PASS SALT FOG AND IMMERSION TEST AFTER CONDITIONING AS SPECIFIED IN ESA-644 (WEATHER-PACK),ESA-710 (METRI-PACK), ESA-650 (UNDERWOOD MICRO-PACK), C-4006 (WORLD CONNECTOR), ETC WHEN MATED TO MATING PART OR EQUIVALENT

7. FOR ALL OPEN CAVITY VERSIONS SEE SHEET 1

8. FOR ASSEMBLIES WITH 7WM CLIP SLOT SEE DRAWING 15521156

9. MINIMUM RETAINER REMOVAL FORCE: 60N.

(N/A) PROCESS SENSITIVE DIMENSION	REFERENCE
DIMENSIONS ENCLOSED IN ( ) INDICATE REFERENCE DIMENSIONS AND NO TOLERANCE IS LISTED FOR DIMENSIONS.	

DIMENSIONAL RANGE (MM)									
FROM	0.00	3.00	6.00	30	120	>300	>1200	>2000	>3000
TO	3	6	30	120	300	1200	2000	3000	5000
TOLERANCE (UNLESS OTHERWISE SPECIFIED)									
±0.25	±0.25	±0.25	±0.25	±0.25	±0.25	±0.5	±1.0	±1.5	±2.0

ANGULAR TOLERANCE ±0.25°

THIRD ANGLE PROJECTION	DO NOT SCALE	USE MATH DATA	NX

DRAWING NUMBER: 35117334						
SIZE	SCALE	FORMAT NO	SHEET NO	OF NO	REV	N/P
A1x3	4:1	1 OF 2	2	OF	R	31

DWG STATUS					ZONE	REVISION HISTORY	AUTH	DR	APVD	APVD
DATE	SUB	REV	N/P	CHG						
12NO18	R	01	-	-	-	ALL PARTS - RELEASED PART DRAWING	441510	DAV	JAA	JC
22JA19	R	02	-	-	-	35305663,65-66 - RELEASED	442061	GDH	JAA	MVM
26JN19	R	03	-	-	-	35249058-64, 35250588-90 - WERE ON DRAWING 15521156; ALL PARTS - ADDED "OPEN CAVITY VERSIONS", "ASSEMBLIES WITH 7WM CLIP SLOT" & "RETAINER REMOVAL FORCE" NOTES	443305	JLL	ACV	ACV
07NO19	R	04	-	-	-	35410785 - RELEASED	550461	GDH	EVV	JCA
20JA20	R	05	-	-	-	35425177-82 - RELEASED	550673	GDH	EVV	SV
01AP20	R	06	-	-	-	35305665-66 - UPDATED PART AVAILABILITY	551422	JAA	JAA	JCA
23JN20	R	07	-	-	-	35465003-06 - RELEASED	551674	GDH	EVV	JCA
07JL20	R	08	-	-	-	35305663 - UPDATED PART AVAILABILITY	551817	AHY	AHY	SV
30JL20	R	09	-	-	-	35480127 - RELEASED	551946	EVV	EVV	SV
17SE20	R	10	-	-	-	35425177, 35465003 & 35465005 - UPDATED PART AVAILABILITY	552511	LDC	JAA	SV
22SE20	R	11	-	-	-	35465003 - UPDATED RETAINER TO LATEST REVISION; 35494608 & 10 - RELEASED	552471	LXA	CSD	SV
19JA21	R	12	-	-	-	35276093,35425178-80 - UPDATED PART AVAILABILITY	553363	GLG	LVD	SV
09FE21	R	13	-	-	-	35425181-82, 35494608 & 10 - UPDATED PART AVAILABILITY	553510	GDH	JDM	SV
26FE21	R	14	-	-	-	35538265 - RELEASED	553581	JDC	JAA	SV
12MR21	R	15	-	-	-	35480127 & 35538265 - UPDATED PART AVAILABILITY	553784	JDC	JAA	SV
25MR21	R	16	-	-	-	35544555, 35548966 - RELEASED	553836	AHY	JAA	SV
27AU21	R	17	-	-	-	35589629, 35589631 & 35589634 - RELEASED	555203	LDC	JAA	SV
19NO21	R	18	-	-	-	35544555 - UPDATED PART AVAILABILITY (P/N #45 NOT AVAILABLE)	555922	ESG	LVD	SV
29NO21	R	19	-	-	-	35255590 - UPDATED PART AVAILABILITY (P/N #45 NOT AVAILABLE)	555959	JDC	JAA	SV
05JA22	R	20	-	-	-	35617112 - 19 - RELEASED	555979	MLR	JAA	SV
14JA22	R	21	-	-	-	35635348, 35635350, 35635352, 35635354, 35636014, 35636016 - RELEASED	556218	MLR	JAA	SV
15FE22	R	22	-	-	-	35644062 - RELEASED	556602	EZJ	JAA	SV
10MR22	R	23	-	-	-	35410785, 35589629, 31, 34, 35636014, 16, 35548966 & 35644062 - UPDATED PART AVAILABILITY (P/N'S WERE NOT AVAILABLE)	556656	AHY	JAA	SV
04AP22	R	24	-	-	-	35635348,50,52,54 - UPDATED PART AVAILABILITY (P/N'S WERE NOT AVAILABLE)	557043	AHY	JAA	SV
31MY22	R	25	-	-	-	35676210 - RELEASED	557560	AHY	CSD	SV
21JN22	R	26	-	-	-	35682597 - RELEASED	557752	ESG	JAA	SV
14JL22	R	27	-	-	-	35690487-90 - RELEASED	558001	GLG	JAA	SV
04AU22	R	28	-	-	-	35690487-90, 35676210 - UPDATED PART AVAILABILITY (P/N'S WERE NOT AVAILABLE)	558212	EZJ	JAA	SV
17NO22	R	29	-	-	-	35730414 - RELEASED	558997	JDC	JAA	SV
11JA22	R	30	-	-	-	35738139 - RELEASED	559291	ESG	GLG	MFA
06MR23	R	31	-	-	-	35758560 - RELEASED	559780	ESG	JAA	MFA

THIS DRAWING IS THE PROPERTY OF APTIV AND CONTAINS APTIV CONFIDENTIAL INFORMATION. THE RECEIPT OF THIS DRAWING OR THE UTILIZATION OF THIS DOCUMENT OR ITS RELATED CAD MATH DATA, MUST BE COMMUNICATION OF ANY CONTENTS TO OTHERS, WITHOUT EXPRESS AUTHORIZATION, IS PROHIBITED.

LINE DRAWN THROUGH A PART NUMBER INDICATES THAT PHYSICAL PARTS ARE NOT AVAILABLE FOR ORDERING.

PART NUMBERS THAT DO NOT HAVE A LINE PRESENT INDICATE THAT PHYSICAL PARTS ARE AVAILABLE FOR ORDERING.

CONTACT APTIV SALES TO ASSURE AVAILABILITY OF PARTS.

DWG TYPE	PART DRAWING
STYLE	
VOLUME CAV	SEE CHART
EDITOR CODE	

UNLESS OTHERWISE SPECIFIED
THIS DOCUMENT IS IN ACCORDANCE WITH ASME Y14.5M-1994 AND ISO 10135:2007 DRAWING DESIGN STANDARD NO. 001 FOR 3D DATA-DRIVEN RECONCILIATION REQUIREMENTS.

ALL DIMENSIONS ARE IN MILLIMETERS

REFERENCE	
DR	DANIEL ALVAREZ
APVD1	J. S. ALVARADO
APVD2	J. CHAVEZ
APVD3	
APVD4	
SUBSTANCES OF CONCERN AND RECYCLED CONTENT PER APTIV (DRAFTED)	
SEE CHART	
DRAWING NAME	TAXI ASM CONN 12 M OCS 1.5 SLD
DRAWING NUMBER	35117334

DATE
2NO18
2NO18
4NO18

APTIV
CONNECTION SYSTEMS
WARREN, OH
COPYRIGHT 2018 APTIV. ALL RIGHTS RESERVED.

35117334

Page 1 of 31
Sheet 1 Of 31
Date: 1-Mar-23
Time: 10:14:00

Mouser Electronics

Authorized Distributor

Click to View Pricing, Inventory, Delivery & Lifecycle Information:

Aptiv:

35494608