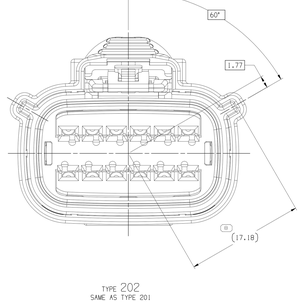

TYPE 202
SAME AS TYPE 201
EXCEPT AS SHOWN

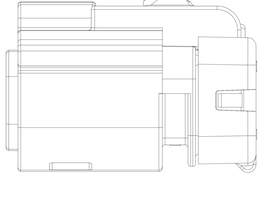

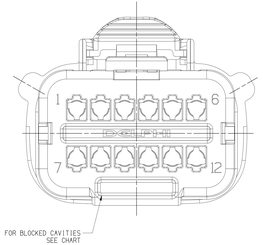

FOR BLOCKED CAVITIES
SEE CHART

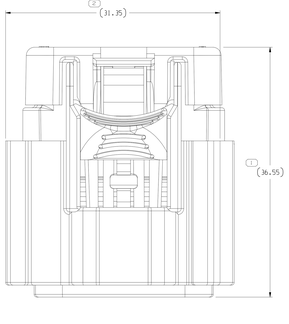

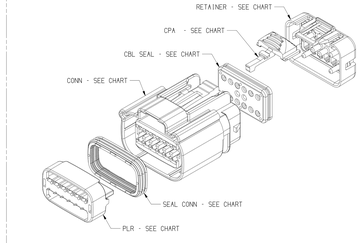

EXPLODED VIEW
SCALE 2:1

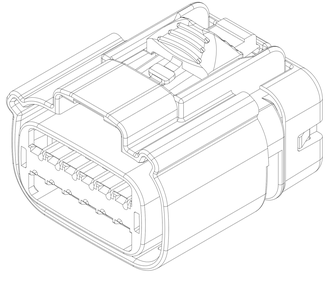

SYMBOL DEFINITION		
A DIMENSION WITHOUT AN INSPECTION REPORT SYMBOL DOES NOT REQUIRE INSPECTION. IT MAY BE CONTROLLED ON THE INDIVIDUAL COMPONENT DRAWING.	TOTAL NO OF INSPECTIONS REQUIRED	10
	LAST NO. USED	8

MISSING SYMBOLS
NO MISSING SYMBOL NUMBER

DWG STATUS DATE	SIZE	REV	N/P	DWG	ZONE	REVISION HISTORY	AUTH	DR	APVD	APVD
305316	R	01	-	-	-	33389035 - RELEASED	A34253	JTV	JTV	JIE
12JN17	R	02	-	-	-	35296259 - ADDED DIM #8 AND RELEASED	A36922	GLO	GLO	AC M
28JL17	R	03	-	-	-	35104797 - RELEASED	A37127	ABH	VHO	VHO
28FE18	R	04	-	-	-	ALL PARTS - REMOVED "ACCEPTED CABLE O.D." NOTE	A39137	GOH	JVM	ACV
20AU18	R	05	-	-	-	35104797 - UPDATED PART AVAILABILITY	A40702	AHO	AHO	VHO
05SE18	R	06	-	-	-	35246998-7000 - RELEASED	A40746	AHO	AHO	JIE
21NO18	R	07	-	-	-	35280173 - RELEASED	A41593	DAV	JAA	JAA
19JN19	R	08	-	-	-	ALL PARTS - ADDED "OPEN CAVITY VERSIONS" & "ASSEMBLIES WITHOUT CPA" NOTES	A43136	LLL	DSP	DSP
02JL19	R	09	-	-	-	35360843, 35358925 - RELEASED	A43641	DAV	CVV	DSP
10JA20	R	10	-	-	-	35296259 - UPDATED PART AVAILABILITY	S5079	GLO	GLO	JAA
26FE20	R	11	-	-	-	35246998-7000 - UPDATED PART AVAILABILITY	S51151	JCP	JAA	DSP
08OC20	R	12	-	-	-	35280173 - UPDATED PART AVAILABILITY	S52676	JLL	JAA	SV
26FE21	R	13	-	-	-	35534756, 58, 60 & 35537680 - RELEASED	S53581	JOC	JAA	SV
04NO21	R	14	-	-	-	35360843 - UPDATED PART AVAILABILITY (PN #45 NOT AVAILABLE)	S55773	LVG	JAA	SV
17NO21	R	15	-	-	-	35621057 - RELEASED	S55851	EZJ	JAA	SV
04MR22	R	16	-	-	-	35621057 - UPDATED PART AVAILABILITY (PN #45 NOT AVAILABLE)	S56655	MLR	JAA	SV
14JA22	R	17	-	-	-	35627699 - RELEASED	S57747	AHY	JAA	SV
28JL22	R	18	-	-	-	35696919, 20 - RELEASED	S58163	MLR	CSD	MFA
14NO22	R	19	-	-	-	35730397-98 - RELEASED	S58995	AHY	JAA	SV
25NO22	R	20	-	-	-	35696919 & 35696920 - UPDATED PART AVAILABILITY (PN'S WERE NOT AVAILABLE)	S59015	GOH	JOC	SV
06MR23	R	21	-	-	-	35758574, 75, 76 - RELEASED	S59767	JOC	JAA	MFA

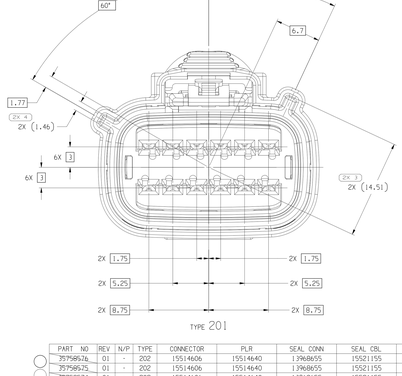

TYPE 201

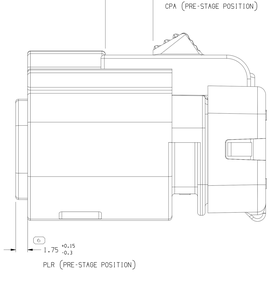

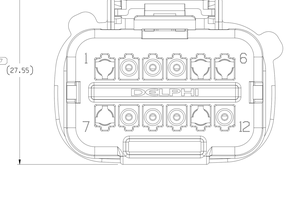

PART NO	REV	N/P	TYPE	CONNECTOR	PLR	SEAL CONN	SEAL CBL	RETAINER	CPA	USCAR OPTION	1	2	3	4	5	6	7	8	9	10	11	12	TOTAL BLOCKED CAVITIES
35758576	01	-	202	15514606	15514640	1968655	15521155	35758578	15519096	A	X	X		X	X	X	X	X	X			X	10
35758575	01	-	202	15514606	15514640	1968655	15521155	35758577	15519096	A	X	X										X	3
35758674	01	-	202	15514606	15514640	1968655	15521155	35758570	15519096	A	X	X		X	X							X	5
35730398	01	-	202	15514606	15514640	1968655	15521155	35730390	15519096	A				X	X	X	X	X	X	X	X	X	10
35730397	01	-	202	15514606	15514640	1968655	15521155	35730388	15519096	A				X			X	X			X		4
35696920	01	AA	202	15514606	15514640	1968655	15521155	35696914	15519096	A				X		X	X	X	X	X	X	X	8
35696919	01	AA	201	15514608	15514640	1968655	15521155	35696913	15519096	B				X		X	X	X	X	X	X	X	7
35627699	01	-	202	15514606	15514640	1968655	15521155	35627697	15519096	A				X		X				X	X	X	4
35621057	01	AA	201	15514608	15514640	1968655	15521155	35621056	15519096	B				X	X			X				X	4
35937680	01	-	202	15514606	15514640	1968655	15521155	35537679	15519096	A						X	X						2
35934760	01	-	202	15514606	15514640	1968655	15521155	35276184	15519096	A												X	1
35934758	01	-	202	15514606	15514640	1968655	15521155	35534750	15519096	A				X	X			X	X				4
35934756	01	-	202	15514606	15514640	1968655	15521155	35534749	15519096	A				X	X								2
35360843	01	AA	202	15514606	15514640	1968655	15521155	35360842	15519096	A											X	X	2
35358925	01	-	202	15514606	15514640	1968655	15521155	35359292	15519096	A	X					X	X						3
35280173	01	AB	202	15514606	15514640	1968655	15521155	35280171	15519096	A				X	X	X	X		X				5
35247000	01	AB	202	15514606	15514640	1968655	15521155	35247003	15519096	A				X	X	X	X	X		X	X	X	9
35246999	01	AB	202	15514606	15514640	1968655	15521155	35247002	15519096	A	X				X				X	X	X	X	6
35246998	01	AB	202	15514606	15514640	1968655	15521155	35247001	15519096	A										X	X	X	3
35104797	01	AC	202	15514606	15514640	1968655	15521155	35104851	15519096	A				X		X				X			3
35096259	01	AC	202	15514606	15514640	1968655	15521155	15514635	15519096	A	X	X	X	X	X	X	X	X	X	X	X	X	12
33389035	01	AB	201	15514608	15514640	1968655	15521155	33389036	15519096	B	X				X	X	X				X		5
PART NO	REV	N/P	TYPE	CONNECTOR	PLR	SEAL CONN	SEAL CBL	RETAINER	CPA	USCAR OPTION	1	2	3	4	5	6	7	8	9	10	11	12	TOTAL BLOCKED CAVITIES
											PLUGGED BLOCKED CIRCUITS POSITIONS												

NOTES

1. UNLESS OTHERWISE SPECIFIED AND/OR INDICATED:

   DIMENSIONS ARE TO FACE OF VIEW SHOWN AND AUTOMATICALLY ROUNDED BY COMPUTER FOR INSPECTION (SEE MATH MODEL FOR PRECISE DIMENSIONS). FOR ALL OTHER DIMENSIONS NOT SHOWN BUT REQUIRED FOR TOOL BUILD, SEE MATH MODEL FOR PRECISE TOOL PATH DATA.

2. PART IS MANUFACTURED TO GEOMETRIC TOLERANCES. CENTERLINE DIMENSIONS ARE FOR REFERENCE ONLY.

3. SEALING CODE 4 - DESIGN WILL MEET REQUIREMENTS OF SAE/USCAR-2 CONNECTOR SYSTEM ENVIRONMENTAL TEST FLOWCHART (PRESSURE/VACUUM AND SUBMERSION).

4. THIS PRODUCT IS NOT CATEGORIZED AS AN APPEARANCE ITEM. MINOR IMPERFECTIONS INCLUDING, BUT NOT LIMITED TO, FLOW MARKS, COLOR BLEMISHES, GATE VESTIGE, AND SOFT FLASH THAT DO NOT AFFECT THE FIT, FORM, OR FUNCTION OF THE PART ARE PERMISSIBLE PER ENP.4-3.CS.01.EN.

5. FOR APPLICATION DATA SEE THE INDIVIDUAL APPLICATION DRAWINGS.

6. FOR ALL OPEN CAVITY VERSIONS SEE SHEET 1

7. FOR ASSEMBLIES WITHOUT CPA SEE DRAWING 15532137

* LINE DRAWN THROUGH A PART NUMBER INDICATES THAT PHYSICAL PARTS ARE NOT AVAILABLE FOR ORDERING. PART NUMBERS THAT DO NOT HAVE A LINE PRESENT INDICATE THAT PHYSICAL PARTS ARE AVAILABLE FOR ORDERING. CONTACT APTIV SALES TO ASSURE AVAILABILITY OF PARTS.	
DWG TYPE: PART DRAWING	
STYLE	
VOLUME (CM³)	SYSTEM UNIT
UNLESS OTHERWISE SPECIFIED THIS DOCUMENT IS IN ACCORDANCE WITH ASME Y14.5M-1994 DIMENSIONS ARE IN MILLIMETERS. ANGULAR TOLERANCE: ±0.5°. TOLERANCING MAXIMUM MATERIAL. SEPARATE MATERIAL OF FEATURES MAY BE GROUP SEPARATELY REGARDLESS OF DATUM REFERENCES.	
ALL DIMENSIONS ARE IN MILLIMETERS	
REFERENCE	
THIRD ANGLE PROJECTION	DO NOT SCALE / USE MATH DATA

DIMENSIONAL RANGE (MM)									
FROM	0	>30	>50	>80	>120	>200	>250	>315	>400
TO	30	50	80	120	200	250	315	400	500
TOLERANCE (UNLESS OTHERWISE SPECIFIED)									
±0.25	±0.3	±0.4	±0.5	±0.6	±0.7	±0.8	±0.9	±1.0	±1.2
ANGULAR TOLERANCE ±0°									

⚠ DIMENSIONS ENCLOSED IN ( ) INDICATE REFERENCE DIMENSIONS AND NO TOLERANCE WILL BE ESTABLISHED.	
(5) PROCESS SENSITIVE DIMENSION	

COPYRIGHT 2016 APTIV. ALL RIGHTS RESERVED.
THIS DRAWING IS THE PROPERTY OF APTIV AND CONTAINS APTIV CONFIDENTIAL INFORMATION. THE RECEIPT OR POSSESSION OF THIS DOCUMENT DOES NOT GIVE RIGHTS TO REPRODUCE OR USE THE INFORMATION CONTAINED IN IT. NEITHER THE DOCUMENT NOR THE INFORMATION IT CONTAINS MAY BE COMMUNICATED OR DISCLOSED TO OTHERS, WITHOUT EXPRESS AUTHORIZATION, OR PREJUDICE.

•APTIV•
CONNECTION SYSTEMS
WARREN, OH

		DATE
DR		
APVD	JOSE LUIS TAPIA	30SE16
APVD	JOSE LUIS TAPIA	30JA16
APVD	JORGE ESCAMILLA	30SE16
APVD		
	SUBSTANCES OF CONCERN AND RECYCLED CONTENT PER APTIV CEMPOSS	
	SEE CHART	
DRAWING NAME	TAXI ASM CONN 12 F OCS 1.5 SLD	
DRAWING NUMBER	15514632	

SIZE	SCALE	SHEET NO	SHEET TOTAL	REV	N/P
A1x3	5:1	1 OF 1	2 OF	R	21

DRAWING NUMBER 15514632
A1x3 | SCALE 5:1 | SHEET NO 2 OF 1 | SHEET TOTAL 2 OF | R | 21 | N/P -

Template: CAD_A3_Portrait_Rev_2016-01-15.dwt
Date: 4-Mar-23 Time: 10:05:15

Mouser Electronics

Authorized Distributor

Click to View Pricing, Inventory, Delivery & Lifecycle Information:

Aptiv:

35621057