FEMALE CONNECTOR 12 WAY CODINGS

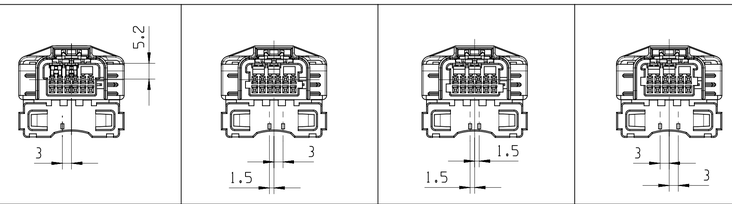

CODE 1	CODE 2	CODE 3	CODE 4	VIEW F
CODING				
WHITE	VIOLET	GREEN	ORANGE	COLOR
33404693	33509693	33509694	33509695	APTIV PART NUMBER
01	01	01	01	APTIV PART REVISION

DWG STATUS DATE	STG	REV	N/P	CHG	ZONE	REVISION HISTORY	AUTH	DR	APVD 1	APVD 2
18JA22	R	01				INITIAL RELEASE		P.BAL	M.LAG	M.LAG

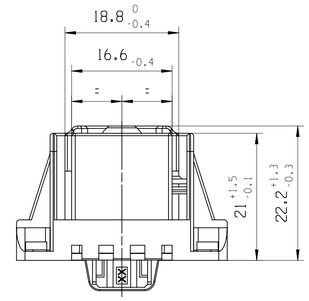

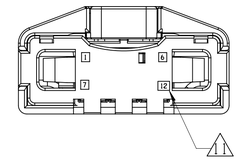

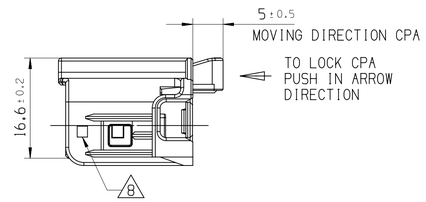

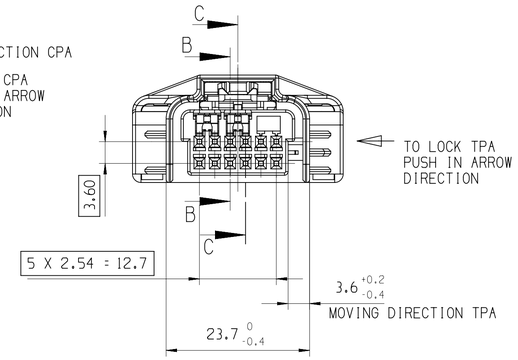

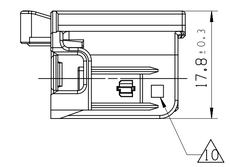

SHORT CIRCUIT

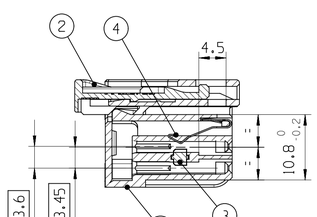

SECTION C-C

WITHOUT COURT CIRCUIT

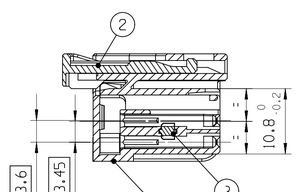

SECTION B-B

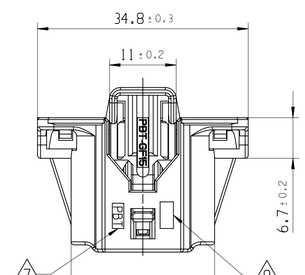

3D VIEW

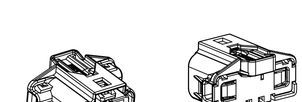

SCALE 1:1

OVERALL DIMENSION FOR MOUNTABILITY

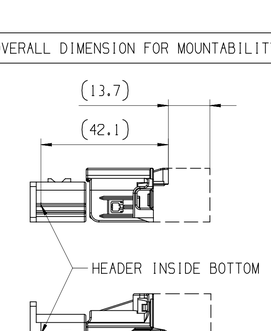

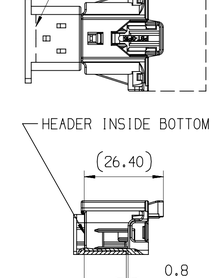

ASSOCIATED PARTS (FOR INFORMATION)

SECTION	MQS 0.635 FEMALE TERMINAL APTIV P/N	INSULATION DIAMETER OF WIRE
0.35 - 0.5 mm²	TBD	-
TITLE		ASSOCIATED DOCUMENTS
INTERFACE DRAWING		PCC0839890

APTIV NUMBER	CODE	QTY.	DESCRIPTION	APTIV PART NUMBER	MATERIAL	COLOR	NO.
12 WAY FEMALE CONNECTOR	33509695	4	1 TPA	33506944	PBT GF15	VIOLET	3
			1 CPA	33507047	PBT GF15	ORANGE	2
			1 FEMALE HOUSING	33506951	PBT	YELLOW	1
	33509694	3	1 TPA	33506944	PBT GF15	VIOLET	3
			1 CPA	33507046	PBT GF15	GREEN	2
			1 FEMALE HOUSING	33506952	PBT	YELLOW	1
	33509693	2	1 TPA	33506944	PBT GF15	VIOLET	3
			1 CPA	33507045	PBT GF15	VIOLET	2
			1 FEMALE HOUSING	33506953	PBT	YELLOW	1
	33404693	1	2 SHORT CIRCUIT	33510757	X10CrNi18.8	---	4
			1 TPA	33506944	PBT GF15	VIOLET	3
			1 CPA	33507045	PBT GF15	WHITE	2
			1 FEMALE HOUSING	33404692	PBT	YELLOW	1

NOTE	SPECIFICATIONS
1	FEMALE CONNECTOR ACCORDING TO APTIV SPECIFICATION: CAQE TBD
2	FEMALE CONNECTOR ACCORDING TO: -TEMPERATURE CLASS T2 -ENGINE VIBRATOR CLASS V1 -SEALING CLASS E0
3	USER'S MANUAL: TBD
4	DELIVERY CONNECTOR WEIGHT : 5.9g
5	NO WAFER HINGE OR WAFER HINGE BROKEN ALLOWED
6	VISUAL DEFECTS ON NO FUNCTIONNAL AREAS ALLOWED
7	FEMALE HOUSING MATERIAL
8	PART REVISION NUMBER
9	SUPPLIER LOGO
10	DATE CLOCK
11	WAY IDENTIFICATION

A LINE DRAWN THROUGH A PART NUMBER INDICATES THAT PHYSICAL PARTS ARE NOT AVAILABLE FOR ORDERING.

PART NUMBERS THAT DO NOT HAVE A LINE PRESENT INDICATE THAT PHYSICAL PARTS ARE AVAILABLE FOR ORDERING.

CONTACT APTIV SALES TO ASSURE AVAILABILITY OF PARTS.

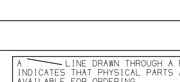

SHARP CORNER TOLERANCE

DIM TO CHECK / ( ) DIM FOR HELP / THEORETIC DIM	DIMENSIONAL RANGE (MM) FROM TO	> 0 20	> 20 30	> 30 70	> 70 100	>100 150	>150 200	>200 250	>250 300	>300 400
	TOLERANCE UNLESS OTHERWISE SPECIFIED	±0.15	±0.2	±0.3	±0.4	±0.5	±0.6	±0.8	±1	±1.2
	ANGULAR TOLERANCE ±2°									

DWG TYP: CUSTOMER PART DRAWING

WEIGHT (GR): ---

VOLUME (CM³): ---

ROUTING

DISTR CODE: D

UNLESS OTHERWISE SPECIFIED

GENERAL TOLERANCES ACCORDING TO: SEE CHART

GD&T ACCORDING TO: ISO 1101

REFERENCE

FIRST ANGLE PROJECTION

DO NOT SCALE

USE MATH DATA

CAD NX

•APTIV•

CONNECTION SYSTEMS

Chennai, India

COPYRIGHT 2022 APTIV. ALL RIGHTS RESERVED.

THIS DRAWING IS THE PROPERTY OF APTIV AND CONTAINS APTIV CONFIDENTIAL INFORMATION. THE REPRODUCTION, DISTRIBUTION AND UTILIZATION OF THIS DOCUMENT OR ITS RELATED CAD MATH DATA, AS WELL AS COMMUNICATION OF ANY CONTENT TO OTHERS, WITHOUT EXPRESS AUTHORIZATION, IS PROHIBITED.

		DATE
DR	P.BALAJI	18JA22
APVD1	LAGUETTE MAURICE	18JA22
APVD2	LAGUETTE MAURICE	18JA22
APVD3		
APVD4		
APVD5		

SUBSTANCES OF CONCERN AND RECYCLED CONTENT PER APTIV 10949001

MATERIAL: SEE TABLE

DRAWING NAME: FEMALE HOUSING COMPLETE 12 WAY CONNECTOR FOR CLOCK SPRING

DRAWING NUMBER: 13896186

SIZE	SCALE	FRAME NO	SHEET NO	STG	REV	N/P
A1	2:1	1 OF 1	1 OF 1	R	01	

User: KZSGTM
Dwg: 13896186-CUS10-S01/01 Date: 11-Mar-22 Time: 09:55:56
KZSGTM.03112022.05:25:150pages.cus

Mouser Electronics

Authorized Distributor

Click to View Pricing, Inventory, Delivery & Lifecycle Information:

Aptiv:
33404693