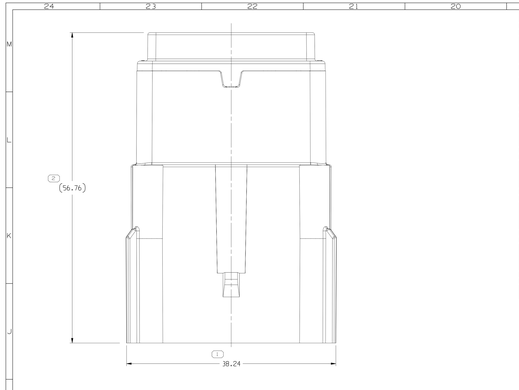

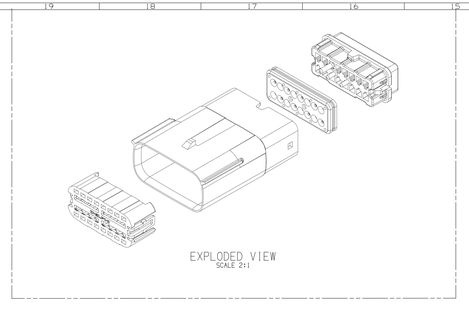

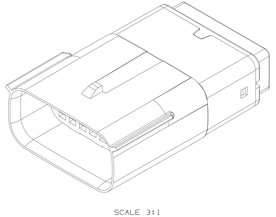

SCALE 3:1

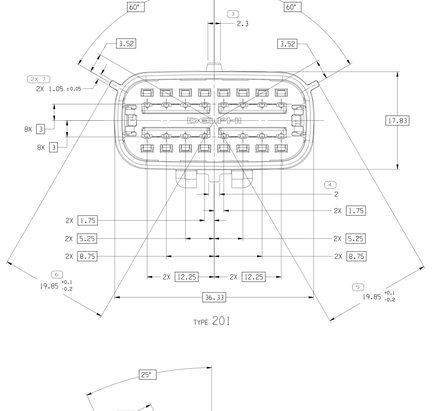

TYPE 201

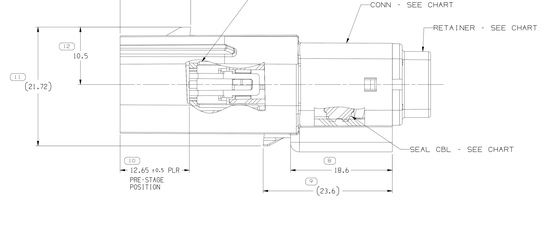

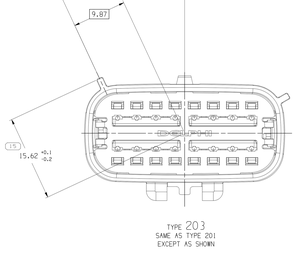

TYPE 203
SAME AS TYPE 201
EXCEPT AS SHOWN

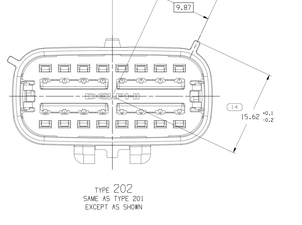

TYPE 202
SAME AS TYPE 201
EXCEPT AS SHOWN

SYMBOL DEFINITION		MISSING SYMBOLS
A DIMENSION WITHOUT AN INSPECTION REPORT SYMBOL DOES NOT REQUIRE INSPECTION. IT MAY BE CONTROLLED ON THE INDIVIDUAL COMPONENT DRAWING.	TOTAL NO OF INSPECTIONS REQUIRED: 16	NO MISSING SYMBOL NUMBER
	LAST NO. USED: 15	

PART NO	REV	N/P	TYPE	MALE CONN	PLR	CABLE SEAL	RETAINER	1	2	3	4	5	6	7	8	9	10	11	12	13	14	15	16	TOTAL BLOCKED CAVITIES	USCAR KEY OPTION
								BLOCKED CAVITIES																	
3573815-2	01	-	201	35021680	15521010	15521007	3573984	-	X	-	-	X	X	X	-	X	X	-	X	X	-	-	X	9	A
3579442-2	01	-	201	35021680	15521010	15521007	3730391	-	X	-	-	-	-	-	-	-	-	X	X	X	X	X	-	7	A
3709492-2	01	-	201	35021680	15521010	15521007	3709895	-	-	-	-	X	X	-	-	-	-	-	X	X	-	X	X	6	A
3709491-2	01	-	201	35021680	15521010	15521007	3709890	X	X	X	X	X	X	X	X	-	-	X	X	X	X	X	X	14	A
3709494-2	02	-	201	35021680	15521010	15521007	3709889	-	-	-	-	X	X	X	-	-	-	X	X	X	X	X	X	8	A
3709495-2	01	-	201	35021680	15521010	15521007	3709888	-	-	-	-	-	-	-	-	-	-	X	X	-	X	-	X	3	A
3709493-2	01	-	201	35021680	15521010	15521007	3709886	X	-	-	-	-	-	X	-	X	-	X	X	-	-	-	-	5	A
3709492-2	01	-	201	35021680	15521010	15521007	3709882	-	-	-	-	-	-	X	-	X	-	-	-	-	-	-	-	3	A
3709491-2	01	-	201	35021680	15521010	15521007	3709881	-	-	-	-	-	-	X	-	X	-	X	-	-	-	X	X	5	A
3709492-2	01	-	201	35021680	15521010	15521007	3709880	X	-	-	-	-	-	X	-	X	-	X	X	-	-	X	X	7	A
3709492-2	01	-	201	35021680	15521010	15521007	3709879	X	-	-	-	-	-	X	-	X	-	-	-	X	X	X	X	8	A
3569550-2	01	AA	203	35021681	15521010	15521007	3569542	-	-	-	-	X	X	X	X	-	-	-	X	X	X	-	X	9	B
3569549-2	01	AA	203	35021681	15521010	15521007	3569541	-	-	-	-	X	X	X	X	-	-	-	X	-	-	X	-	6	B
3569548-2	01	AA	203	35021681	15521010	15521007	3569540	-	-	-	-	X	X	X	X	-	-	-	-	-	-	-	-	4	B
3569547-2	01	AA	203	35021681	15521010	15521007	3569539	-	-	-	-	X	X	X	X	-	X	X	X	X	X	X	-	11	B
3569546-2	01	AA	203	35021681	15521010	15521007	3569538	-	-	-	-	-	X	X	X	-	-	-	-	-	-	-	-	3	B
3569545-2	01	AA	203	35021681	15521010	15521007	3569537	-	-	-	-	X	-	X	X	X	X	X	X	X	X	X	-	11	B
3569544-2	01	AA	201	35021680	15521010	15521007	3569536	X	X	-	-	X	X	X	-	X	-	-	-	-	-	-	X	8	A
3569543-2	01	AA	201	35021680	15521010	15521007	3569535	X	X	X	X	X	X	X	-	X	-	-	-	X	-	-	X	10	A
3568558-2	01	-	201	35021680	15521010	15521007	3568259	-	X	-	-	-	-	-	-	X	-	X	X	X	X	-	-	7	A
3568025-2	01	AA	203	35021681	15521010	15521007	3568024	X	-	-	-	-	-	-	-	X	-	-	-	-	X	-	-	3	B
3567796-2	01	AA	201	35021680	15521010	15521007	3567788	-	-	-	-	-	-	X	X	-	-	-	-	-	-	X	X	4	A
3567794-2	01	AA	201	35021680	15521010	15521007	3567787	-	-	-	-	-	X	X	X	-	X	X	X	-	-	-	-	6	A
3567793-2	01	AA	201	35021680	15521010	15521007	3567786	X	X	X	-	-	X	X	X	-	X	X	X	-	-	X	X	11	A
3567792-2	01	AA	201	35021680	15521010	15521007	3567785	-	-	-	-	-	X	X	X	-	X	X	X	-	-	X	X	8	A
3567791-2	01	AA	201	35021680	15521010	15521007	3567783	-	-	-	X	-	X	X	X	X	X	X	X	-	-	-	-	8	A
3567790-2	01	AA	201	35021680	15521010	15521007	3567782	X	X	X	X	-	X	X	X	X	X	X	X	-	-	X	X	13	A
3567789-2	01	AA	201	35021680	15521010	15521007	3567781	-	-	-	X	-	X	X	X	X	X	X	X	-	-	X	X	10	A
3566924-2	01	-	201	35021680	15521010	15521007	3566913	-	-	-	-	-	-	-	-	X	-	X	X	X	-	-	X	5	A
3566912-2	01	-	201	35021680	15521010	15521007	3566912	-	-	-	-	-	-	-	-	X	-	X	-	X	X	X	X	7	A
3566911-2	01	-	201	35021680	15521010	15521007	3566911	-	-	-	-	-	-	X	X	X	X	-	-	X	X	X	X	8	A
3565639-2	01	AA	201	35021680	15521010	15521007	3565639	-	X	-	-	X	X	X	-	X	X	X	X	-	X	-	X	11	A
3564131-2	01	AA	201	35021680	15521010	15521007	3564129	-	-	-	-	-	-	-	-	-	-	-	-	-	X	-	X	2	A
3546502-2	01	-	201	35021680	15521010	15521007	3546522	-	-	-	-	-	-	X	-	-	-	-	-	-	-	-	X	2	A
3546502-2	01	-	201	35021680	15521010	15521007	3546521	-	-	-	-	-	-	X	X	X	X	X	-	-	-	-	X	6	A
3546502-2	01	-	201	35021680	15521010	15521007	3546519	-	-	X	-	-	-	X	-	-	-	-	-	-	-	-	X	4	A
3546502-2	01	-	201	35021680	15521010	15521007	3546516	-	-	X	-	-	-	-	X	X	X	X	X	-	-	-	-	8	A
3535192-2	01	-	201	35021680	15521010	15521007	3535187	-	-	-	-	-	-	X	-	-	-	-	-	X	X	-	-	3	A
3560381-0	01	AA	201	35021680	15521010	15521007	3560797	-	X	X	X	X	X	X	X	X	X	X	-	X	X	X	X	14	A
3560387-9	01	AA	201	35021680	15521010	15521007	3560796	-	-	X	-	-	-	-	X	-	X	X	X	X	X	X	X	8	A
3560380-8	01	AA	201	35021680	15521010	15521007	3560795	-	-	-	-	-	-	-	X	-	X	-	X	X	X	X	-	6	A
3560380-7	01	AA	201	35021680	15521010	15521007	3560792	X	-	-	-	-	-	-	-	-	X	X	X	X	X	-	-	6	A
3560380-6	01	AA	201	35021680	15521010	15521007	3560791	X	X	X	X	X	X	-	-	-	X	-	X	X	X	X	-	12	A
3560380-5	01	AA	201	35021680	15521010	15521007	3560790	X	X	X	X	X	X	-	-	-	X	-	X	X	X	X	-	11	A
3554106-0	01	AA	201	35021680	15521010	15521007	3476734	-	-	-	-	-	-	-	-	X	-	-	X	X	X	X	-	5	A
3554080-0	01	AA	201	35021680	15521010	15521007	3476732	-	-	-	-	-	-	X	-	-	-	-	X	X	X	X	-	7	A
3551870-1	01	AA	203	35021681	15521010	15521007	3518700	-	-	-	-	-	-	X	-	-	-	-	-	-	-	X	-	2	B
3551869-9	01	AA	201	35021680	15521010	15521007	3518698	-	-	-	X	X	X	X	-	-	X	X	-	X	-	-	X	8	A
3551867-8	01	AA	201	35021680	15521010	15521007	3518676	-	-	-	-	-	-	-	-	-	-	-	-	X	-	X	X	3	A
3549208-4	01	AA	201	35021680	15521010	15521007	3549280	-	-	-	-	-	-	X	X	X	X	X	X	X	X	X	X	10	A
3549208-3	01	AA	201	35021680	15521010	15521007	3549079	-	-	-	-	-	-	X	X	X	X	X	X	X	X	X	X	8	A
3549208-2	01	AA	201	35021680	15521010	15521007	3549078	-	-	-	-	-	-	X	X	X	X	X	X	-	-	-	-	6	A
3549208-1	01	AA	201	35021680	15521010	15521007	3549077	-	-	-	-	-	-	X	X	X	-	-	X	-	-	-	-	5	A
3546502-4	01	-	203	35021681	15521010	15521007	3546526	-	-	-	X	X	X	X	X	X	X	X	X	X	X	X	X	13	B
3546503-1	01	AA	203	35021681	15521010	15521007	3546525	X	X	X	X	X	X	X	X	X	X	X	X	X	X	X	X	13	B
3546502-4	01	AA	203	35021681	15521010	15521007	3546524	-	-	-	-	-	X	-	-	-	-	-	X	X	X	X	X	6	B
3548385-0	01	AA	201	35021680	15521010	15521007	3548860	-	-	-	-	-	-	X	-	-	-	-	-	-	-	-	-	1	A
3548384-9	01	AA	201	35021680	15521010	15521007	3548859	-	-	-	-	-	-	X	X	X	X	X	-	-	-	-	-	5	A
3548384-7	01	AA	201	35021680	15521010	15521007	3548858	-	-	X	X	-	-	-	-	-	-	-	-	-	-	-	-	3	A
3548384-6	01	AA	201	35021680	15521010	15521007	3548857	-	-	X	-	-	-	-	X	X	X	X	X	-	-	-	-	7	A
3548384-5	01	AA	201	35021680	15521010	15521007	3548856	-	-	X	X	X	X	-	-	X	-	-	-	-	-	X	-	6	A
3548384-4	01	AA	201	35021680	15521010	15521007	3548855	-	-	X	-	X	X	-	-	X	-	X	X	-	-	X	-	10	A
3548384-3	01	AA	201	35021680	15521010	15521007	3548854	-	-	-	-	X	-	-	-	-	-	-	-	-	-	X	-	3	A
3548384-2	01	AA	201	35021680	15521010	15521007	3548853	-	-	-	-	X	-	X	X	X	X	X	-	-	-	X	-	7	A
3542944-2	01	AB	201	35021680	15521010	15521007	15514456	X	X	X	X	X	X	X	X	X	-	X	X	X	X	X	X	16	B
3529407-5	01	AB	201	35021680	15521010	15521007	3529168	-	-	X	X	X	X	X	-	X	-	-	-	-	-	-	X	7	A
3527884-8	01	AB	201	35021680	15521010	15521007	3527848	-	X	-	-	X	X	X	-	X	-	-	X	X	X	-	X	9	A
3527867-1	01	AB	201	35021680	15521010	15521007	3527850	-	-	-	-	X	-	X	X	-	-	-	-	-	X	X	-	7	A
3531153-6	01	AA	201	35021680	15521010	15521007	3511532	-	-	X	X	-	X	-	X	-	-	-	-	-	-	X	X	6	A
3531153-5	01	AA	201	35021680	15521010	15521007	3511531	-	-	X	X	-	X	-	X	X	X	X	X	-	-	X	X	10	A
3531153-4	01	AA	201	35021680	15521010	15521007	3511530	-	-	-	-	-	X	-	X	-	-	-	-	-	-	X	X	4	A
3531153-3	01	AA	201	35021680	15521010	15521007	3511529	-	-	-	-	-	X	-	X	X	X	X	X	-	-	X	X	8	A
3527582-2	01	AB	201	35021680	15521010	15521007	3527582-5	-	-	-	-	-	-	-	X	-	-	-	-	X	-	-	-	2	A
3520520-1	01	AB	201	35021680	15521010	15521007	3520527	-	-	-	-	-	-	-	-	-	-	-	-	X	-	X	X	3	A
3519406-4	01	AA	202	35021682	15521010	15521007	3519069	X	-	-	-	-	-	X	X	-	-	-	-	X	X	X	X	7	C
3519406-1	01	AA	202	35021682	15521010	15521007	3519068	X	X	-	-	-	-	X	X	-	-	-	-	X	X	X	X	8	C
3519406-2	01	AA	202	35021682	15521010	15521007	3519067	X	-	-	-	-	X	X	X	-	-	-	-	X	X	X	X	8	C
3519412-2	01	AD	203	35021681	15521010	15521007	3512816	X	X	X	X	-	-	-	-	-	-	-	-	X	X	X	X	9	B
3512439-6	01	AD	203	35021681	15521010	15521007	3512815	-	-	-	-	-	-	-	-	-	-	-	-	X	X	X	X	4	B
3512379-5	01	AD	203	35021681	15521010	15521007	3512814	-	-	-	-	-	X	-	-	-	-	-	-	X	X	X	X	5	B
3519412-1	01	AD	203	35021681	15521010	15521007	3512813	X	-	X	X	-	X	-	-	-	-	-	-	X	X	X	X	10	B
3512379-2	01	AD	203	35021681	15521010	15521007	3512811	-	-	-	-	X	-	-	-	-	-	-	-	X	X	X	X	5	B
3519412-3	01	AD	203	35021681	15521010	15521007	3512810	X	X	X	X	X	-	X	-	-	-	-	-	X	X	X	X	10	B
3519412-4	01	AD	201	35021680	15521010	15521007	3519522	X	X	X	X	-	-	X	X	X	X	X	X	-	-	-	-	10	A
3519746-2	01	AD	201	35021680	15521010	15521007	3501921	X	X	X	X	-	-	X	X	X	X	X	X	-	-	X	X	12	A
3519746-6	01	AD	201	35021680	15521010	15521007	3519520	-	-	X	X	X	X	-	-	-	-	-	-	X	X	-	-	6	A
3519746-5	01	AD	201	35021680	15521010	15521007	3519519	-	-	X	-	-	-	-	-	-	-	-	-	X	X	X	X	5	A
3519746-4	01	AD	201	35021680	15521010	15521007	3501918	X	X	X	X	X	X	-	-	X	X	X	X	X	X	-	-	11	A
3519746-2	01	AD	201	35021680	15521010	15521007	3501917	X	X	X	X	X	X	-	-	-	-	-	-	X	X	-	-	8	A
3519746-1	01	AD	201	35021680	15521010	15521007	3501916	-	-	-	-	-	-	-	-	X	X	X	X	X	X	X	X	7	A
3517560-1	01	AE	201	35021680	15521010	15521007	3374897	-	-	-	-	X	-	-	-	-	-	-	-	X	X	-	-	2	A
3517559-1	01	AE	201	35021680	15521010	15521007	3368218	-	-	-	-	-	-	-	-	-	-	-	-	-	-	X	X	1	A
3519746-8	01	AD	201	35021680	15521010	15521007	3368217	X	-	-	-	-	-	X	-	X	X	-	X	X	X	-	X	7	A
3519746-7	01	AD	201	35021680	15521010	15521007	3368216	X	X	-	-	-	-	X	-	X	X	X	X	X	X	-	X	10	A
3517556-1	01	AE	201	35021680	15521010	15521007	3368215	-	X	-	-	X	-	X	-	-	-	X	X	X	-	X	X	8	A
3519555-1	01	AD	201	35021680	15521010	15521007	3368214	-	-	-	-	-	-	-	-	-	-	-	-	-	-	X	X	2	A
3519746-3	01	AD	201	35021680	15521010	15521007	3368213	X	X	-	-	-	-	X	-	X	X	X	X	X	X	X	X	14	A
3517546-1	01	AD	201	35021680	15521010	15521007	3368212	X	-	-	-	X	-	-	X	-	-	-	-	-	-	-	-	3	A
3519745-1	01	AD	201	35021680	15521010	15521007	3368211	-	X	-	-	-	-	X	-	X	-	-	-	-	-	X	X	4	A
3519745-2	01	AD	201	35021680	15521010	15521007	3368210	-	-	-	-	-	-	-	-	-	X	X	X	X	X	-	-	4	A
3519745-1	01	AD	201	35021680	15521010	15521007	3368209	X	-	-	-	-	-	X	-	-	-	-	-	-	-	X	X	2	A
3519745-9	01	AD	201	35021680	15521010	15521007	3368208	-	-	-	-	X	-	-	-	-	-	-	-	-	-	-	X	1	A
3517544-1	01	AE	201	35021680	15521010	15521007	3350473	X	X	X	X	-	-	-	-	-	-	-	-	-	-	-	-	4	A
3503754-3	01	AE	201	35021680	15521010	15521007	3350472	-	X	-	-	-	-	-	-	-	-	-	-	-	-	-	-	1	A
PART NO	REV	N/P	TYPE	MALE CONN	PLR	CABLE SEAL	RETAINER	1	2	3	4	5	6	7	8	9	10	11	12	13	14	15	16	TOTAL BLOCKED CAVITIES	USCAR KEY OPTION
								BLOCKED CAVITIES																	

DWG STATUS DATE	SUB REV	N/P	DWG	ZONE	REVISION HISTORY	AUTH	DR	APVD	APVD
15FE17	R	01	-	-	ALL PART - RELEASED PART DRAWING	439542	AHD	JJE	
21JN17	R	02	-	-	ALL PARTS - UPDATED RETAINER TO LATEST REVISION AND CORRECTED CALLOUT "TYPE 201" INSTEAD OF "TYPE 202"	437022	JDM	JDM	TM
30AU17	R	03	-	-	35123791 & 92, 94-96 & 98 - RELEASED	437570	AOC	AOC	JJE
06NO17	R	04	-	-	ALL PARTS - 12.65 ±0.5 PLR WAS 12.65 ±0.05 PLR	438316	AHD	AHD	JC
07NO17	R	05	-	-	35037543,44, 35037559,60 - UPDATED PART AVAILABILITY	438331	AHD	AHD	JC
23FE18	R	06	-	-	ALL PARTS - REMOVED "ACCEPT CABLE" NOTE	439093	LKA	JAA	ACV
04AP18	R	07	-	-	35197082-84 - RELEASED	439380	AHD	AHD	JJE
17MY18	R	08	-	-	35205201 - RELEASED	439617	VJD	JAA	HL
25JN18	R	09	-	-	35123791-92,94-96 & 98 - BASE CONN P/N WAS 35021680 & ADDED VIEW TYPE 201; 35123792 & 98 - UPDATED PART AVAILABILITY	440196	LVD	JAA	JJE
13NO18	R	10	-	-	35275822 - RELEASED	441509	AHD	AHD	JC
05FE19	R	11	-	-	35311533-36 - RELEASED	442209	GDH	JAA	JAV
11MR19	R	12	-	-	35037556, 35275822 - UPDATED PART AVAILABILITY	442601	JCA	DEG	JCA
19MR19	R	13	-	-	35327867-68 - RELEASED	442718	DAV	JAA	JCA
07JN19	R	14	-	-	ALL PARTS - ADDED "OPEN CAVITY VERSIONS", "ASSEMBLIES WITH 7MM" AND "MINIMUM RETAINER DISENGAGE FORCE" NOTES, ADDED "USCAR KEY OPTION" COLUMN; 35249075 - WAS ON DRAWING 15521026-SHT 21 35037546 - UPDATED PART AVAILABILITY	443301	JLL	JAA	ACV
19JL19	R	15	-	-	35205201 - UPDATED PART AVAILABILITY	444008	DML	JAA	DML
23SE19	R	16	-	-	35327867 - UPDATED PART AVAILABILITY	550093	JLL	JAA	DML
10OC19	R	17	-	-	35402944 - RELEASED	550229	LKA	JDM	JAF
10OC19	R	18	-	-	35402944 - UPDATED PART AVAILABILITY	550254	JAA	JAA	JAF
18MR20	R	19	-	-	35327868 - UPDATED PART AVAILABILITY	551306	LKA	LKA	JCA
31JL20	R	20	-	-	35483842-47, 35483849-50 - RELEASED	552133	GLO	GLO	SV
14AU20	R	21	-	-	35483842-47, 35483849-50 - UPDATED PART AVAILABILITY	552229	JLL	JAA	SV
02SE20	R	22	-	-	35465032-34 - RELEASED	551951	JLL	JAA	SV
23SE20	R	23	-	-	35492081-84 - RELEASED	552346	JOO	JAA	SV
08DE20	R	24	-	-	35518678, 35518699, 35518701 - RELEASED	553127	LLL	COO	SV
19JA21	R	25	-	-	35465032-33 - UPDATED PART AVAILABILITY	553363	GLO	GLO	SV
13AP21	R	26	-	-	35554080,35554106 - RELEASED	553946	AHD	AHD	SV
05JL21	R	27	-	-	35518701 - UPDATED PART AVAILABILITY (PN WAS NOT AVAILABLE)	554729	JLL	JAA	ACR
14JL21	R	28	*	-	35492084 - UPDATED PART AVAILABILITY (PN WAS NOT AVAILABLE)	554756	JLL	JAA	SV H
24AU21	R	29	-	-	35492081, 35518678, 35518699, 35554080 & 35554106 - UPDATED PART AVAILABILITY (PN WAS NOT AVAILABLE)	555080	GDH	JAA	SV
13SE21	R	30	*	-	35492082 - UPDATED PART AVAILABILITY (PN WAS NOT AVAILABLE)	555289	GDH	GLO	SV
15OC21	R	31	-	-	35603805-10 - RELEASED	555508	GLO	JAA	SV
29NO21	R	32	*	-	35492083 - UPDATED PART AVAILABILITY (PN WAS NOT AVAILABLE)	555959	JOO	JAA	SV
07JA22	R	33	-	-	35635390 - RELEASED	556221	ESO	GDH	SV
11JA22	R	34	-	-	35465027-30 - RELEASED	556222	GLO	GLO	SV
20JA22	R	35	-	-	35603805-10 - UPDATED PART AVAILABILITY (PART NUMBERS WERE NOT AVAILABLE)	556295	GLO	GLO	SV
15FE22	R	36	-	-	35641311 - RELEASED	556385	MJR	JAA	SV
11AP22	R	37	-	-	35656397 - RELEASED	557303	JOO	JAA	SV
28AP22	R	38	*	-	35641311 - UPDATED PART AVAILABILITY (PN WAS NOT AVAILABLE)	557544	JOO	JAA	SV
12MY22	R	39	-	-	35669516, 35669519 & 35669524 - RELEASED	557405	GDH	JAA	SV
17MY22	R	40	-	-	35671789-94, 96 - RELEASED	557447	MYI	JAA	SV
31MY22	R	41	-	-	35671789-94, 96 - UPDATED PART AVAILABILITY (P/N WAS NOT AVAILABLE)	557596	GLO	GLO	SV F
16JN22	R	42	*	-	35686225, 35682596 - RELEASED	557749	ESO	JAA	SV
18JL22	R	43	-	-	35697543-50 - RELEASED	558051	MYI	JAA	SV
23SE22	R	44	-	-	35709909-13,15-17 & 22 - RELEASED	558566	JOO	JAA	SV
20OC22	R	45	-	-	35697543-50, 35680225, 35656397 - UPDATED PART AVAILABILITY (P/N WAS NOT AVAILABLE)	558710	ESO	JAA	SV
15NO22	R	46	-	-	35719412 - RELEASED 35719412 - REVISED BLOCKED CONFIGURATION (BLOCKED CAV #16)	558993	GDH	JAA	SV
12JA23	R	47	-	-	35738175 - RELEASED	559288	JOO	GLO	WFA

NOTES

1. UNLESS OTHERWISE SPECIFIED AND/OR INDICATED:

   DIMENSIONS ARE TO FACE OF VIEW SHOWN AND AUTOMATICALLY ROUNDED BY COMPUTER FOR INSPECTION (SEE MATH MODEL FOR PRECISE DIMENSIONS). FOR ALL OTHER DIMENSIONS NOT SHOWN BUT REQUIRED FOR TOOL BUILD, SEE MATH MODEL FOR PRECISE TOOL PATH DATA.

2. THIS PRODUCT IS NOT CATEGORIZED AS AN APPEARANCE ITEM. MINOR IMPERFECTIONS INCLUDING, BUT NOT LIMITED TO, FLOW MARKS, COLOR BLEMISHES, GATE VESTIGE, AND SOFT FLASH THAT DO NOT AFFECT THE FIT, FORM, OR FUNCTION OF THE PART ARE PERMISSIBLE PER EAAP.4-3.CS.01.EN.

3. FOR APPLICATION DATA SEE THE INDIVIDUAL APPLICATION DRAWINGS.

4. PART IS MANUFACTURED TO GEOMETRIC TOLERANCES. CENTERLINE DIMENSIONS ARE FOR REFERENCE ONLY.

5. SEALING CODE 4 - DESIGN WILL MEET REQUIREMENTS OF SAE/USCAR-2 CONNECTOR SYSTEM ENVIRONMENTAL TEST FLOWCHART (PRESSURE/VACUUM AND SUBMERSION).

6. FOR ALL OPEN CAVITY VERSIONS SEE SHEET 1

7. FOR ASSEMBLIES WITH 7MM CLIP SLOT SEE DRAWING 15521026

8. MINIMUM RETAINER DISENGAGE FORCE: 60N.

(N/A) PROCESS SENSITIVE DIMENSION

DIMENSIONS ENCLOSED IN () INDICATE REFERENCE DIMENSIONS AND NO TOLERANCE IS REQUIRED FOR THESE DIMENSIONS.

DIMENSIONAL RANGE (MM)	0-6	>6-30	>30-120	>120-315	>315-1000	>1000-2000	>2000-4000	>4000-8000
TOLERANCE UNLESS OTHERWISE SPECIFIED (+/-)	0.1	0.2	0.3	0.4	0.5	0.6	0.8	1.0

ANGULAR TOLERANCE: ±0°

*	USE DRAWN PARTS WITH * PART NUMBER INDICATES THAT PHYSICAL PARTS ARE NOT AVAILABLE FOR ORDERING. PART NUMBERS THAT DO NOT HAVE A * ARE PRESENT INDICATE THAT PHYSICAL PARTS ARE AVAILABLE FOR ORDERING. CONTACT APTIV SALES TO ASSURE AVAILABILITY OF PARTS.
DWG TYPE	PART DRAWING
STYLE	
VOLUME (CM³)	SYSTEM CODE

UNLESS OTHERWISE SPECIFIED

THIS DOCUMENT IS IN ACCORDANCE WITH ASME Y14.5M-1994 UNLESS OTHERWISE SPECIFIED. ALL DIMENSIONS AND TOLERANCES INCLUDING GEOMETRIC TOLERANCES OF FEATURES MAY BE GAGED SEPARATELY REGARDLESS OF datum REFERENCES.

ALL DIMENSIONS ARE IN MILLIMETERS

REFERENCE

THIRD ANGLE PROJECTION

DO NOT SCALE

USE MATH DATA

NX

•APTIV•

CONNECTION SYSTEMS

WARREN, OH

COPYRIGHT 2017 APTIV. ALL RIGHTS RESERVED.

THIS DRAWING IS THE PROPERTY OF APTIV AND CONTAINS APTIV CONFIDENTIAL INFORMATION. NO PERSON OR ENTITY MAY DISCLOSE OR MAKE UTILIZATION OF THIS DOCUMENT OR ITS RELATED DATA WITH DATA, NO WILL BE COMMUNICATION OF ANY CONTENT TO OTHERS, WITHOUT EXPRESS AUTHORIZATION, IS PROHIBITED.

		DATE
DR		
APVD	ARMANDO HERNANDEZ	15FE17
APVD	ARMANDO HERNANDEZ	15FE17
APVD	JORGE ESCAMILLA	15FE17
APVD		
APVD		

SUBSTANCES OF CONCERN AND RECYCLED CONTENT PER APTIV (DRAWING)

SEE CHART

DRAWING NAME

TAXI ASM CONN 16 M OCS 1.5 SLD

DRAWING NUMBER

35021693

SIZE	CAGE CODE	SHEET NO	OF	REV	NUM
A1x3	41	1	OF 2	R	47

35021693

3503 1693

Tue Jan 23 2018 14:07:43 Sheet 1 of 2 Page 1 of 2

Mouser Electronics

Authorized Distributor

Click to View Pricing, Inventory, Delivery & Lifecycle Information:

Aptiv:
35603805