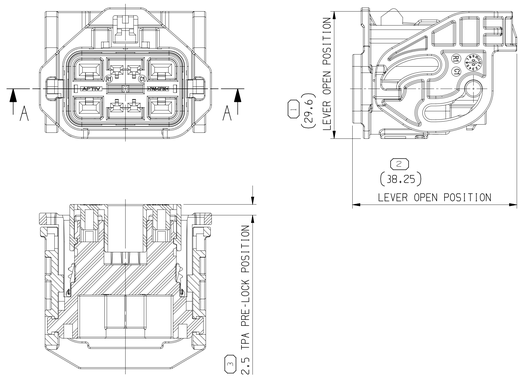

SCALE 2:1

LEVER OPEN AND TPA PRE-LOCK POSITION

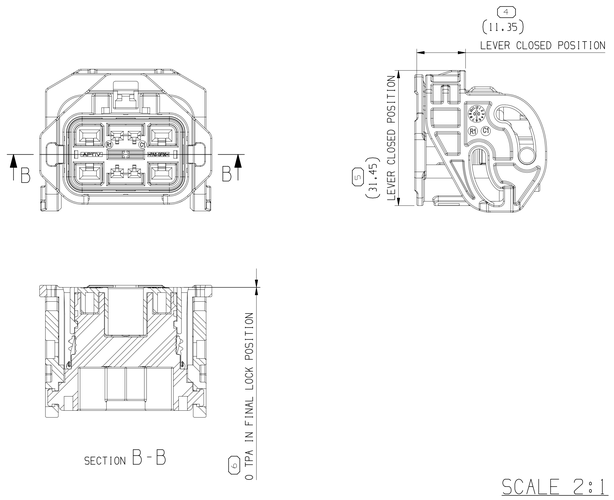

SCALE 2:1

LEVER CLOSED AND TPA FINAL-LOCK POSITION

SYMBOL DEFINITION		
A DIMENSION WITHOUT AN INSPECTION REPORT SYMBOL ⬭ DOES NOT REQUIRE INSPECTION. IT MAY BE CONTROLLED ON THE INDIVIDUAL COMPONENT DRAWING.	TOTAL NO OF INSPECTIONS REQUIRED	35
	LAST NO. USED	30

MISSING SYMBOLS

NO MISSING SYMBOL NUMBER

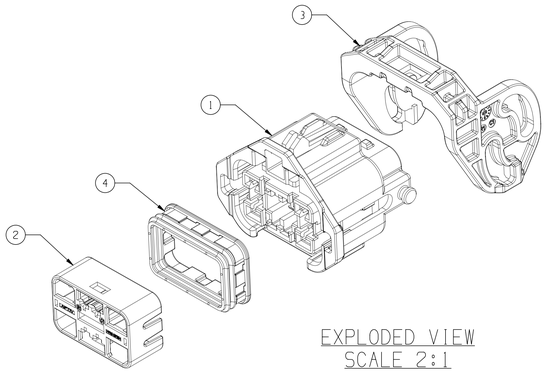

EXPLODED VIEW
SCALE 2:1

DWG STATUS					ZONE	REVISION HISTORY	AUTH	DR	APVD 1	APVD 2
DATE	STG	REV	N/P	CHG						
15FE19	R	01	-	-		INITIAL DRAWING		CWJ	CJW	PJH

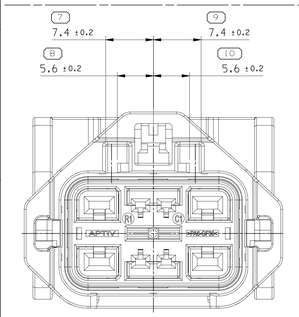

CODE A

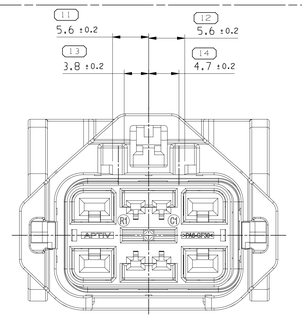

CODE B

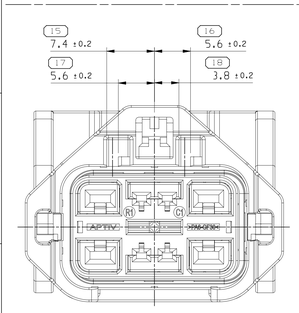

CODE C

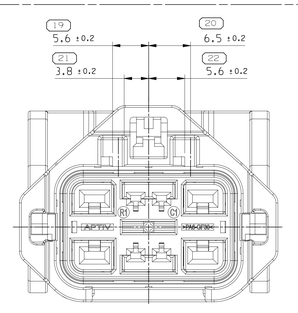

CODE D

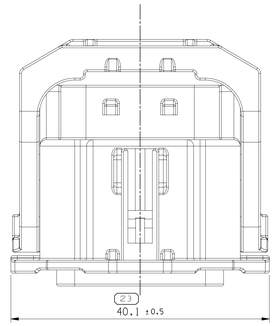

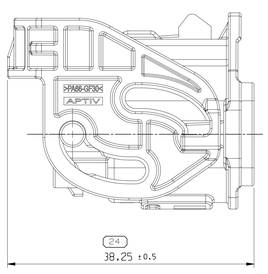

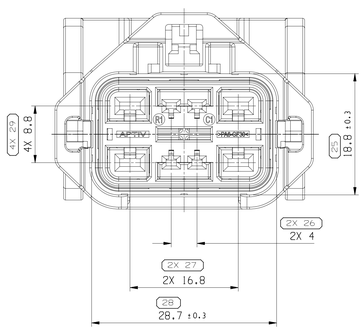

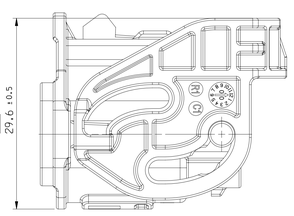

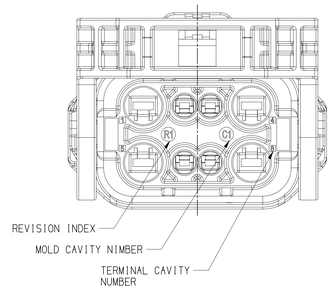

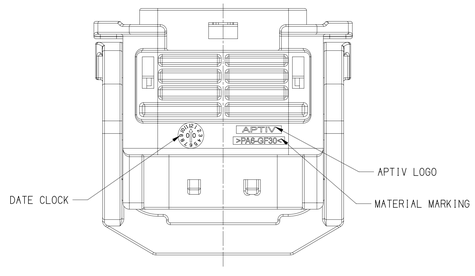

NOTES:

1. TOLERANCE ON DIN ISO 2768 (m)
2. MUST BE FREE OF CRACK , FLOW MARK, FLASH, BURR ETC, THAT AFFECT FUNCTION OF PRODUCT
3. MUST MEET HMC ES91500-00 UNLESS OTHERWISE SPECIFIED TO VENDOR SPECIFICATION
4. APPLICABLE MALE CONNECTORS :

ASSOCIATED PARTS				
FEMALE TERMINAL		PART NUMBER	WIRE SIZE(mm²)	AWG
APEX 2.8	TIN	13627267	2.5	13
APEX 1.2	TIN	54001864	0.75~1.25	16~18
		54002006	0.3~0.5	20~22
	SILVER STRIPE, SPOT	F731400	0.75~1.25	16~18
		F931400	0.3~0.5	20~22
	GOLD STRIPE, SPOT	54001863	0.75~1.25	16~18
		54002005	0.3~0.5	20~22
	TIN SILVER	54001866	0.75~1.25	16~18
		54002007	0.3~0.5	20~22

CABLE SEAL						
TERMINAL	TYPE	PART NUMBER	WIRE SIZE(mm²)	INSULATION Ø	COLOR	MATERIAL
APEX 2.8	SHORT	35215173	2.5	2.9~3.0	BLACK	SILICONE RUBBER
APEX 1.2	SHORT	33318278	0.3~0.35	1.2~1.5	GRAY	
		33318279	0.5~0.85	1.6~1.9	LIGHT GRAY	
		33318275	1.0~1.5	1.9~2.4	BLACK	
	DUMMY SEAL	33402443	-	-	WHITE	
		35020635	-	-	DARK GRAY	

CODING	TYPE	REP.	PART NUMBER	DESCRIPTION	QTY.	MATERIAL	COLOR	REMARKS
A TYPE	ASSEMBLY	-	35238861	SEALED FEMALE CONNECTOR CODE A	-	-	-	
	FEMALE HOUSING	1	35258425	FEMALE HOUSING CODE A	1	PA6 GF30	BLACK	
	TPA	2	35258444	FEMALE TPA	1	PA6 GF30	BLUE	
	LEVER	3	35258445	LEVER	1	PA66 GF30	GRAY	
	INTERFACE SEAL	4	35258443	INTERFACE SEAL	1	SILICONE RUBBER	RED	
B TYPE	ASSEMBLY	-	35239041	SEALED FEMALE CONNECTOR CODE B	-	-	-	
	FEMALE HOUSING	1	35258429	FEMALE HOUSING CODE B	1	PA6 GF30	BLACK	
	TPA	2	35258444	FEMALE TPA	1	PA6 GF30	BLUE	
	LEVER	3	35258445	LEVER	1	PA66 GF30	GRAY	
	INTERFACE SEAL	4	35258443	INTERFACE SEAL	1	SILICONE RUBBER	RED	
C TYPE	ASSEMBLY	-	35241513	SEALED FEMALE CONNECTOR CODE C	-	-	-	
	FEMALE HOUSING	1	35258431	FEMALE HOUSING CODE C	1	PA6 GF30	BLACK	
	TPA	2	35258444	FEMALE TPA	1	PA6 GF30	BLUE	
	LEVER	3	35258445	LEVER	1	PA66 GF30	GRAY	
	INTERFACE SEAL	4	35258443	INTERFACE SEAL	1	SILICONE RUBBER	RED	
D TYPE	ASSEMBLY	-	35258378	SEALED FEMALE CONNECTOR CODE D	-	-	-	
	FEMALE HOUSING	1	35258442	FEMALE HOUSING CODE D	1	PA6 GF30	BLACK	
	TPA	2	35258444	FEMALE TPA	1	PA6 GF30	BLUE	
	LEVER	3	35258445	LEVER	1	PA66 GF30	GRAY	
	INTERFACE SEAL	4	35258443	INTERFACE SEAL	1	SILICONE RUBBER	RED	

DIN ISO 2768	Tolerance Class Medium (m)						
Linear Dimensions except for broken edges	Permissible deviations for basic size range (mm)						
	0.5 •) up to 3	over 3 up to 6	over 6 up to 30	over 30 up to 120	over 120 up to 400	over 400 up to 1000	over 1000 up to 2000
	±0.1	±0.1	±0.2	±0.3	±0.5	±0.8	±1.2
Broken edges (radii, chamfers)	Permissible deviations for basic size range (mm)						
	0.5 •) up to 3		over 3 up to 6			over 6	
	±0.2		±0.5			±1	
	Permissible deviations for ranges of lengths, in mm, of the shorter side of the angle concerned						
Angular dimensions	up to 10	over 10 up to 50	over 50 up to 120		over 120 up to 400		over 400
	±1°	±0° 30'	±0° 20'		±0° 10'		±0° 5'

•) For nominal sizes below 0.5mm, the deviations shall be indicated adjacent to the relevant nominal size(s).

A LINE DRAWN THROUGH A PART NUMBER INDICATES THAT PHYSICAL PARTS ARE NOT AVAILABLE FOR ORDERING.

PART NUMBERS THAT DO NOT HAVE A LINE PRESENT INDICATE THAT PHYSICAL PARTS ARE AVAILABLE FOR ORDERING.

CONTACT APTIV SALES TO ASSURE AVAILABILITY OF PARTS.

R 0.1 MAX
R 0.2 MAX
SHARP CORNER TOLERANCE

DIMENSIONAL RANGE (MM)											
FROM TO	> 0 20	> 20 30	> 30 70	> 70 150	>100 150	>150 200	>200 250	>250 300	>300 400		
TOLERANCE UNLESS OTHERWISE SPECIFIED											
±0.15	±0.2	±0.3	±0.4	±0.5	±0.6	±0.7	±0.8	±1	±1.2		
ANGULAR TOLERANCE ±2°											

DIM TO CHECK
DIM FOR HELP
THEORETIC DIM

DWG TYP
PART DRAWING

WEIGHT (GM)
VOLUME (CM³)
ROUTING

DISTR CODE
D

UNLESS OTHERWISE SPECIFIED

GENERAL TOLERANCES ACCORDING TO:

GD&T ACCORDING TO:

REFERENCE

THIRD ANGLE PROJECTION

DO NOT SCALE

USE MATH DATA

NX

•APTIV•

CONNECTION SYSTEMS
Chennai, India

COPYRIGHT 2019 APTIV. ALL RIGHTS RESERVED.

THIS DRAWING IS THE PROPERTY OF APTIV AND CONTAINS APTIV CONFIDENTIAL INFORMATION. THE REPRODUCTION, DISTRIBUTION AND UTILIZATION OF THIS DOCUMENT OR ITS RELATED CAD MATH DATA, AS WELL AS COMMUNICATION OF ANY CONTENT TO OTHERS, WITHOUT EXPRESS AUTHORIZATION, IS PROHIBITED.

		DATE
DR	CHO,WOO-JAE	15FE19
APVD1	CHO,WOO-JAE	15FE19
APVD2	CHOI,JUNG-WOOK	15FE19
APVD3	PARK,JOO-HYUN	15FE19
APVD4		
APVD5		

SUBSTANCES OF CONCERN AND RECYCLED CONTENT PER APTIV [094900]

MATERIAL
SEE NOTE

DRAWING NAME
APEX1.2/2.8 8WAY FEMALE CONNECTOR

DRAWING NUMBER
35263945

SIZE	SCALE	FRAME NO	SHEET NO	STG	REV	N/P
A0	3:1	1 OF 1	1 OF 1	R	01	-

Part: yuvan
Model: 35263945_01.prt, Date: 01-Jul-20 Time: 15:26:11

Mouser Electronics

Authorized Distributor

Click to View Pricing, Inventory, Delivery & Lifecycle Information:

Aptiv:
35238861