SYMBOL DEFINITION		
A DIMENSION WITHOUT AN INSPECTION REPORT SYMBOL ( ) DOES NOT REQUIRE INSPECTION. IT MAY BE CONTROLLED ON THE INDIVIDUAL COMPONENT DRAWING.	TOTAL NO OF INSPECTIONS REQUIRED	50
	LAST NO. USED	30

MISSING SYMBOLS
NO MISSING SYMBOL NUMBER

DWG STATUS					ZONE	REVISION HISTORY	AUTH	DR	APVD 1	APVD 2
DATE	STG	REV	N/P	CHG						
26AU16	R	01	-			INITIAL RELEASE		KBK	JJY	PJH
010C18	R	01	AA			ADDED PART NUMBERS FOR HIGH TEMPERATURE		SYK	SJW	PJH
14JN19	R	01	AB	-		ADDED 35342853 PRODUCT	194603	KDJ	SJW	PJH

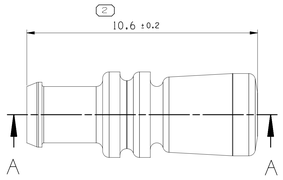

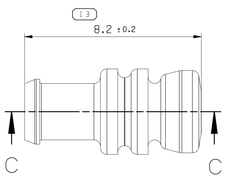

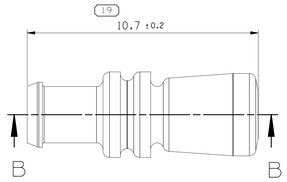

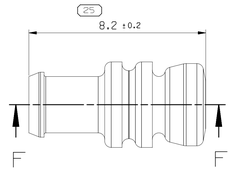

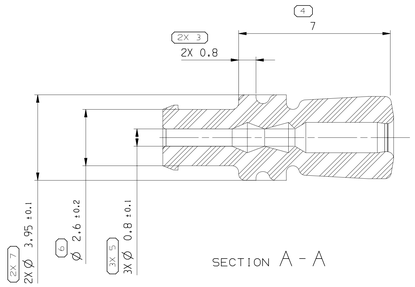

0.3-0.35mm²
(FOR DCK1.5 APPLICATION,LONG)

33318273

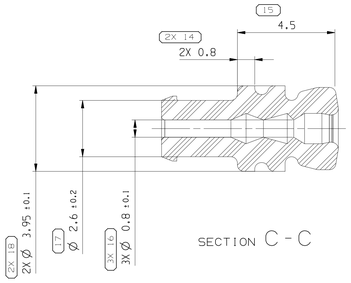

0.3-0.35mm²
(FOR APEX1.2 APPLICATION,SHORT)

33318278
35269088

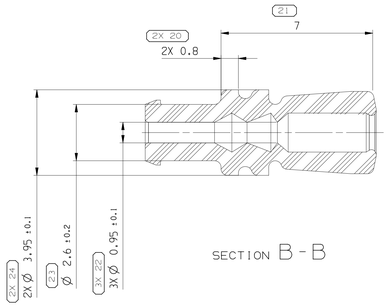

0.5-0.85mm²
(FOR DCK1.5 APPLICATION,LONG)

33318274

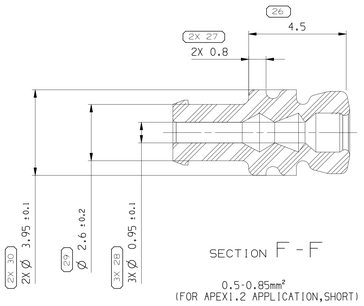

0.5-0.85mm²
(FOR APEX1.2 APPLICATION,SHORT)

33318279
35269087
◯35342853

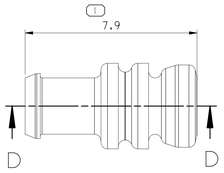

1.0-1.5mm²
(FOR APEX1.2 APPLICATION)

33318275
35269086

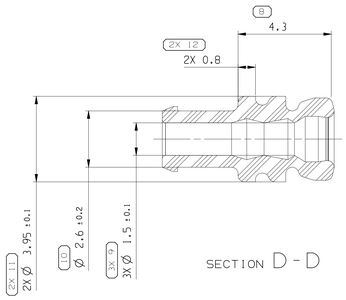

NOTE:
1. MATERIAL : SEE TABLE
2. GENERAL TOLERANCE : ±0.15 , 2°
3. SEALING AREA SURFACE MUST BE FREE OF CUTS,BUBBLES,BLOWHOLES,FURROWS AND INSERT MARKS.

◯

PART NO.	TYPE	CABLE SECTION TYPE (SQMM)	INSULATION OF CABLE	COLOR	MATERIAL	STATUS
35342853	SHORT	0.5~0.85	1.6~1.9	BLUE	FLUORO SILICONE	ACTIVE
~~33366681~~	SHORT	~~0.5~0.85~~	~~1.6~1.9~~	~~GREEN~~	~~FLUORO SILICONE~~	~~INACTIVE~~
~~33366680~~	SHORT	~~0.3~0.35~~	~~1.2~1.6~~	~~BLUE~~	~~FLUORO SILICONE~~	~~INACTIVE~~
~~33366679~~	SHORT	~~1.0~1.5~~	~~1.9~2.4~~	~~BROWN~~	~~FLUORO SILICONE~~	~~INACTIVE~~
35269086	SHORT	1.0~1.5	1.9~2.4	GREEN	SILICONE RUBBER (3580)	ACTIVE
35269087	SHORT	0.5~0.85	1.6~1.9	BLUE	SILICONE RUBBER (3580)	ACTIVE
35269088	SHORT	0.3~0.35	1.2~1.6	BROWN	SILICONE RUBBER (3580)	ACTIVE
33318279	SHORT	0.5~0.85	1.6~1.9	LIGHT GREY	SILICONE RUBBER	ACTIVE
33318278	SHORT	0.3~0.35	1.2~1.6	GREY	SILICONE RUBBER	ACTIVE
33318275	SHORT	1.0~1.5	1.9~2.4	BLACK	SILICONE RUBBER	ACTIVE
33318274	LONG	0.5~0.85	1.6~1.9	GREY	SILICONE RUBBER	ACTIVE
33318273	LONG	0.3~0.35	1.2~1.6	BLACK	SILICONE RUBBER	ACTIVE

A ~~ LINE DRAWN THROUGH A PART NUMBER INDICATES THAT PHYSICAL PARTS ARE NOT AVAILABLE FOR ORDERING.

PART NUMBERS THAT DO NOT HAVE A LINE PRESENT INDICATE THAT PHYSICAL PARTS ARE AVAILABLE FOR ORDERING.

CONTACT APTIV SALES TO ASSURE AVAILABILITY OF PARTS.

DWG TYPE: PART DRAWING

STYLE

VOLUME (CM³)

DISTR CODE: D

UNLESS OTHERWISE SPECIFIED
THIS DOCUMENT IS IN ACCORDANCE WITH ASME Y14.5M-1994 AS AMENDED BY THE GM GLOBAL DIMENSIONING AND TOLERANCING ADDENDUM-2001. SEPARATE PATTERNS OF FEATURES MAY BE GAGED SEPARATELY REGARDLESS OF DATUM REFERENCES.

ALL DIMENSIONS ARE IN MILLIMETERS

REFERENCE

(2) PROCESS SENSITIVE DIMENSION

DIMENSIONS ENCLOSED IN ( ) INDICATE REFERENCE DIMENSIONS AND NO TOLERANCE LIMITS ARE ESTABLISHED

DIMENSIONAL RANGE (MM)					CHART C
FROM	>0	>25	>60	>80	
TO	25	60	80		
TOLERANCE UNLESS OTHERWISE SPECIFIED					
	±0.1	±0.5	±0.6	±0.75%	
ANGULAR TOLERANCE ±2°					

THIRD ANGLE PROJECTION

DO NOT SCALE
USE MATH DATA

CAD NX

•APTIV•
CONNECTION SYSTEMS
Chennai, India

COPYRIGHT 2016 APTIV. ALL RIGHTS RESERVED.

THIS DRAWING IS THE PROPERTY OF APTIV AND CONTAINS APTIV CONFIDENTIAL INFORMATION. THE REPRODUCTION, DISTRIBUTION AND UTILIZATION OF THIS DOCUMENT OR ITS RELATED CAD MATH DATA, AS WELL AS COMMUNICATION OF ANY CONTENT TO OTHERS, WITHOUT EXPRESS AUTHORIZATION, IS PROHIBITED.

		DATE
DR		
APVD1	KIM,BEOM-KYU	26AU16
APVD2	JUNG,JAE-YUP	26AU16
APVD3	PARK,JOO-HYUN	26AU16
APVD4		
APVD5		

SUBSTANCES OF CONCERN AND RECYCLED CONTENT PER APTIV [094900]

MATERIAL: SEE TABLE

DRAWING NAME: TAXI SEAL CONN

DRAWING NUMBER: 33318269

SIZE	SCALE	FRAME NO	SHEET NO	STG	REV	N/P
A0	10:1	1 OF 1	1 OF 1	R	01	AB

Mouser Electronics

Authorized Distributor

Click to View Pricing, Inventory, Delivery & Lifecycle Information:

Aptiv:
33318278