SYMBOL DEFINITION		
A DIMENSION WITHOUT AN INSPECTION REPORT SYMBOL ( ) DOES NOT REQUIRE INSPECTION. IT MAY BE CONTROLLED ON THE INDIVIDUAL COMPONENT DRAWING.	TOTAL NO OF INSPECTIONS REQUIRED	13
	LAST NO. USED	12

MISSING SYMBOLS

NO MISSING SYMBOL NUMBER

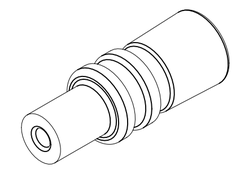

ISOMETRIC VIEW
SCALE 5:1

DWG STATUS					ZONE	REVISION HISTORY	AUTH	DR	APVD 1	APVD 2
DATE	STG	REV	N/P	CHG						
13NO15	R	01	-	-	-	ADD NEW PART NUMBER	-	PSY	YJH	PJH
16MY16	R	01	AA			ADD FLUORO SILICONE TYPE		KBK	JJY	PJH
270C16	R	01	AB		C4	ADD PART NUMBER OF DUMMY SEAL(DARK GRAY)	446068	SYK	JJY	PJH

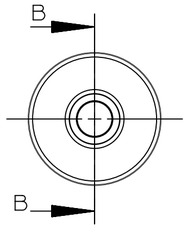

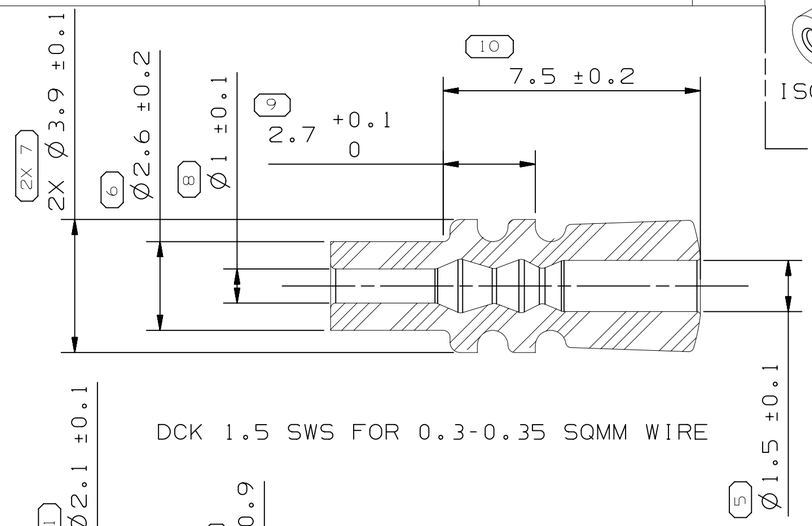

DCK 1.5 SWS FOR 0.3-0.35 SQMM WIRE

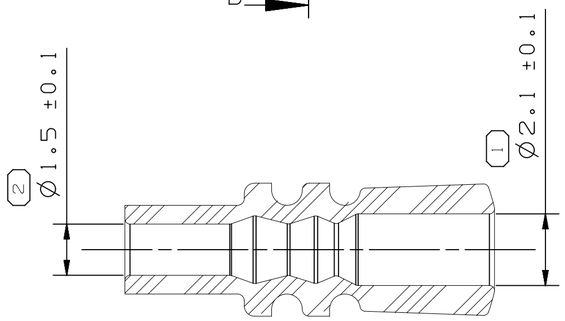

DCK 1.5 SWS FOR 1-1.5 SQMM WIRE

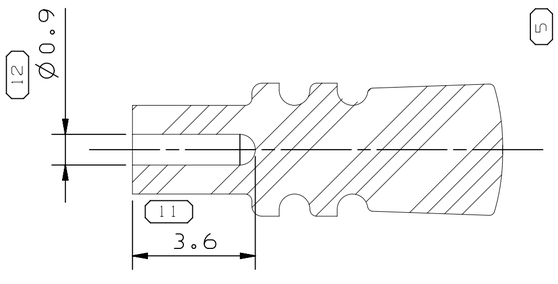

DCK 1.5 DUMMY SEAL / BLIND PLUG

PART NO (MVL)	REV	PART NO (DELPHI)	REV	CABLE SECTION TYPE(SQMM)	INSULATION Ø OF THE CABLE	COLOR	MATERIAL
-	-	33268526	01	0.3-0.35	1.2-1.5	BLUE	FLUORO SILICONE
-	-	33302442	01	1-1.5	2.0-2.4	LIGHT YELLOW	SILICONE RUBBER
F599700	A	33513681	01	1-1.5	2.0-2.4	YELLOW	SILICONE RUBBER
F410400	A	33511838	01	0.5-0.85	1.6-1.9	GRAY	SILICONE RUBBER
F310400	A	33513680	01	0.3-0.35	1.2-1.5	RED	SILICONE RUBBER
-	-	33402443	01	-	-	WHITE	SILICONE RUBBER
-	-	35020635	01	-	-	DARK GRAY	SILICONE RUBBER

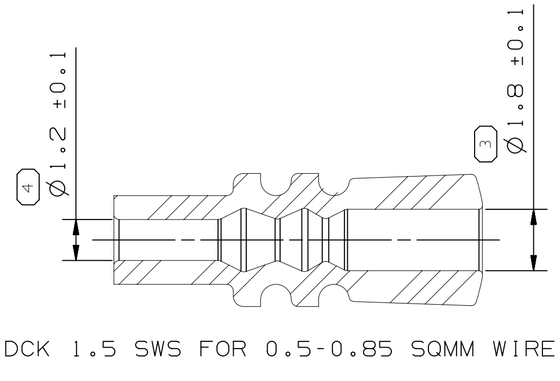

DCK 1.5 SWS FOR 0.5-0.85 SQMM WIRE

NOTES:

1. SEALING AREA SERFACE MUST BE FREE OF CUTS, BLOW HOLES, FURROWS AND INSERT MARKS.
2. UNSPECIFIED RADIUS R0.3
3. COLOR : SEE TABLE
4. GENERAL TOLERANCE IS ±0.1, 2°
5. NO OVER THICKNESS AT THE INJECTION POINT

( ) PROCESS SENSITIVE DIMENSION

DIMENSIONS ENCLOSED IN ( ) INDICATE REFERENCE DIMENSIONS AND NO TOLERANCE LIMITS ARE ESTABLISHED

DIMENSIONAL RANGE (MM)									CHART E1
FROM	> 0	> 20	> 30	> 70	> 100	> 150	> 200	> 250	> 300
TO	20	30	70	100	150	200	250	300	400
TOLERANCE UNLESS OTHERWISE SPECIFIED									
	±0.15	±0.2	±0.3	±0.4	±0.5	±0.6	±0.8	±1	±1.2
ANGULAR TOLERANCE ±2°									

A ——— LINE DRAWN THROUGH A PART NUMBER INDICATES THAT PHYSICAL PARTS ARE NOT AVAILABLE FOR ORDERING.

PART NUMBERS THAT DO NOT HAVE A LINE PRESENT INDICATE THAT PHYSICAL PARTS ARE AVAILABLE FOR ORDERING.

CONTACT APTIV SALES TO ASSURE AVAILABILITY OF PARTS.

DWG TYPE: PART DRAWING

STYLE

VOLUME (CM³)

DISTR CODE

UNLESS OTHERWISE SPECIFIED

THIS DOCUMENT IS IN ACCORDANCE WITH ASME Y14.5M-1994 AS AMENDED BY THE GM GLOBAL DIMENSIONING AND TOLERANCING ADDENDUM-2001. SEPARATE PATTERNS OF FEATURES MAY BE GAGED SEPARATELY REGARDLESS OF DATUM REFERENCES.

ALL DIMENSIONS ARE IN MILLIMETERS

REFERENCE

THIRD ANGLE PROJECTION

DO NOT SCALE

USE MATH DATA

CAD NX

•APTIV•

CONNECTION SYSTEMS

Chennai, India

COPYRIGHT 2020 APTIV. ALL RIGHTS RESERVED.

THIS DRAWING IS THE PROPERTY OF APTIV AND CONTAINS APTIV CONFIDENTIAL INFORMATION. THE REPRODUCTION, DISTRIBUTION AND UTILIZATION OF THIS DOCUMENT OR ITS RELATED CAD MATH DATA, AS WELL AS COMMUNICATION OF ANY CONTENT TO OTHERS, WITHOUT EXPRESS AUTHORIZATION, IS PROHIBITED.

		DATE
DR		
APVD1	PARK,SANG-YOON	13NO15
APVD2	KIM,BEOM-KYU	13NO15
APVD3	PARK,JOO-HYUN	13NO15
APVD4		
APVD5		

SUBSTANCES OF CONCERN AND RECYCLED CONTENT PER DELPHI 10949001

MATERIAL: SEE NOTE

DRAWING NAME: DCK 1.5 SINGLE WIRE SEAL

DRAWING NUMBER: 33303681

SIZE	SCALE	FRAME NO	SHEET NO	STG	REV	N/P
A2	10:1	1 OF 1	1 OF 1	R	01	AB

User: nj90g8 Part: 33303681-CU501-S01/01AB Date: 03-Nov-20 Time: 11:35:43
nj90g8,11032020,07:04,159pgs,cus

Mouser Electronics

Authorized Distributor

Click to View Pricing, Inventory, Delivery & Lifecycle Information:

Aptiv:
33513680