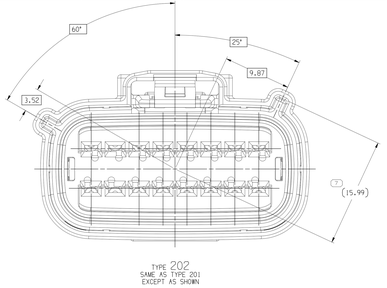

TYPE 202
SAME AS TYPE 201
EXCEPT AS SHOWN

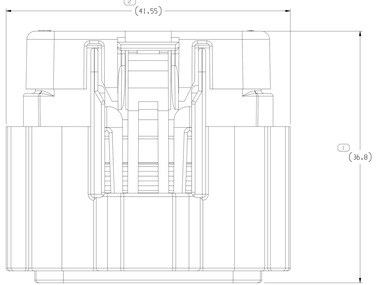

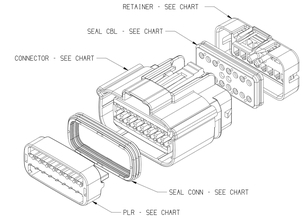

EXPLODED VIEW
SCALE 2:1

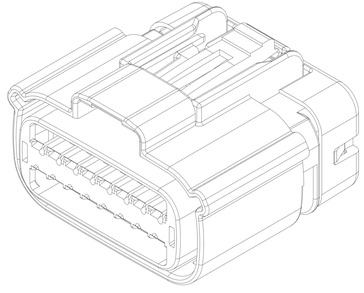

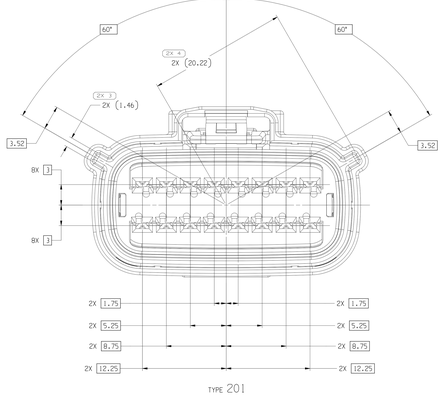

TYPE 201

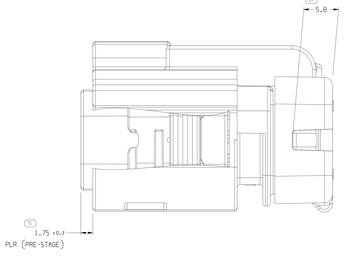

SYMBOL DEFINITION		
A DIMENSION WITHOUT AN INSPECTION REPORT SYMBOL ( ) DOES NOT REQUIRE INSPECTION. IT MAY BE CONTROLLED ON THE INDIVIDUAL COMPONENT DRAWING.	TOTAL NO OF INSPECTIONS REQUIRED	9
	LAST NO. USED	7

MISSING SYMBOLS
NO MISSING SYMBOL NUMBER

DWG STATUS					ZONE	REVISION HISTORY	AUTH	DR	APVD	APVD
DATE	TYPE	REV	N/P	CHG						
01JN16	R	01	-	-	-	ALL PARTS - WERE ON DRAWING 15514480 SHT-021 ADDED PLUGGED BLOCKED CIRCUITS POSITIONS "COLUMN" AND UPDATED BLOCKED CAVITIES "COLUMN"	43321B	GLO	GLO	JIE
04JL16	R	02	-	-	-	33368162-69 & 33368205 - RELEASED	43527	MF	MF	JIE
18JL16	R	03	-	-	-	33374878-81 - RELEASED	43699	MF	MF	JIE
05AU16	R	04	-	-	-	33377712 - RELEASED	43789	ASC	ASC	JIE
12AU16	R	05	-	-	-	ALL PARTS - ADDED DIM #6, UPDATED PLR TO LATEST REVISION, PSD WAS DIM #5 33350494-503 - UPDATED PART AVAILABILITY	43326J	NRM	DOL	DOL
15SE16	R	06	*	-	-	ALL PARTS - DIM #1 WAS (36.55) AND RELOCATED DIM #6 WAS 13.7	43421A	DRA	JIE	JIE
13OC16	R	07	-	-	-	33368162-69, 33368205, 33374878-81 & 33377712 - UPDATED PART AVAILABILITY	43458B	CDD	CDD	JIE
01NO16	R	08	-	-	-	35019961, 35019540, 35019542, 35019544, 35019546, 35019548, 35019550, 35019552, 35019554, 35019556, 35019558, 35019560, 35019562, 35019564, 35019566, 35019568 - RELEASED	43471J	GLO	GLO	JIE
20AP17	R	09	*	-	-	ALL PARTS - UPDATED APPEARANCE NOTE AND ADDED ASSEMBLY NOTES	43638A	NRM	NRM	DOL
28AU17	R	10	-	-	-	35123784, 35123785, 35123786, 35123787, 35123788 & 35123789 - RELEASED AND ADDED "TYPE 202" VIEW	43756Y	GDH	JMM	JIE
16AP18	R	11	*	-	-	35201616 & 35201617 - RELEASED	43956Z	GDH	JAA	JIE
30AU18	R	12	*	-	-	35249072-74 - RELEASED	44075D	DAV	JAA	JIE
12NO18	R	13	-	-	-	35275820-1 - RELEASED	44150B	AHD	AHD	JC
18DE18	R	14	-	-	-	35290250-3 - RELEASED	44178D	AHD	AHD	RR
09AR19	R	15	-	-	-	35249074, 35275820-21, 35290250-53 - UPDATED PART AVAILABILITY	44252K	JOD	RJR	RJR
20JN19	R	16	-	-	-	ALL PARTS - ADDED "OPEN CAVITY VERSIONS" & "ASSEMBLIES WITH CPA" NOTES	44334D	JLL	DSP	DSP
21OC19	R	17	-	-	-	35405952-55, 35405957 & 58 - RELEASED	55028T	ASC	ASC	ACV
19NO19	R	18	-	-	-	35410123, 35410126 & 35410129-31 - RELEASED	55044G	DAG	JAA	JCA
19MR20	R	19	-	-	-	35410129-31 - UPDATED PART AVAILABILITY	55131T	LKA	LKA	JCA
31JL20	R	20	-	-	-	35483851-52 - RELEASED	55213G	GLO	GLO	SV
14AU20	R	21	-	-	-	35483851-52 - UPDATED PART AVAILABILITY	55222K	JLL	JAA	SV
02SE20	R	22	-	-	-	35480188, 35480205, 35480207 - RELEASED	55195T	JLL	JAA	SV
15SE20	R	23	-	-	-	35492100-01, 53-54 & 35496205 - RELEASED	55236B	LKA	CDD	SV
03NO20	R	24	-	-	-	35496205 - UPDATED PART AVAILABILITY	55283B	JLL	JAA	SV
09NO20	R	25	*	-	-	35123788 - UPDATED PART AVAILABILITY	55297K	GLO	GLO	SV
10NO20	R	26	-	-	-	35503282 - RELEASED	55291G	GLO	JAA	SV
02DE20	R	27	-	-	-	35516229, 35516250 - RELEASED	55307J	GLO	JDM	SV
16MR21	R	28	-	-	-	35503282, 35480188 & 35480207 - UPDATED PART AVAILABILITY	55379S	LDD	JAA	SV
13APR21	R	29	-	-	-	35554077-78 - RELEASED	55394G	AHD	AHD	SV

PART NO	REV	N/P	TYPE	CONNECTOR	PLR	SEAL CONN	SEAL CBL	RETAINER	USCAR	PLUGGED BLOCKED CIRCUITS POSITIONS 1	2	3	4	5	6	7	8	9	10	11	12	13	14	15	16	BLOCKED CAVITIES
35554078	01	-	201	15514462	15514487	13968706	15514486	35476720	A	-	-	-	-	-	-	-	-	X	-	-	X	X	X	X	X	5
35554077	01	-	201	15514462	15514487	13968706	15514486	35476718	A	-	-	-	-	-	-	X	X	-	-	X	-	X	X	X	X	7
35516250	01	-	201	15514462	15514487	13968706	15514486	35516249	A	-	-	-	X	X	X	X	-	-	X	X	-	X	-	X	-	8
35516229	01	-	201	15514462	15514487	13968706	15514486	35516228	A	-	-	-	-	-	X	-	-	-	-	X	-	X	-	-	X	4
35503282	01	AA	202	15514463	15514487	13968706	15514486	35503281	B	-	-	-	-	-	X	-	-	-	-	-	X	X	X	X	X	6
35496205	01	AA	202	15514463	15514487	13968706	15514486	35465023	B	-	-	-	-	-	-	-	X	-	-	-	-	-	-	-	X	2
35492100	01	-	201	15514462	15514487	13968706	15514486	35492096	A	-	-	-	-	-	-	X	X	X	X	X	X	X	X	X	X	10
35492101	01	-	201	15514462	15514487	13968706	15514486	35492097	A	-	-	-	-	-	-	X	X	X	-	X	-	X	-	X	X	7
35492153	01	-	201	15514462	15514487	13968706	15514486	35492098	A	-	-	-	-	-	-	X	X	-	-	X	-	X	-	-	-	5
35492154	01	-	201	15514462	15514487	13968706	15514486	35492099	A	-	-	-	-	-	-	X	X	X	X	X	X	X	X	-	-	8
35480207	01	AA	202	15514463	15514487	13968706	15514486	35480206	B	-	-	-	-	-	X	-	-	-	-	-	-	-	-	X	X	3
35480205	01	-	202	15514463	15514487	13968706	15514486	35480190	B	X	X	X	X	X	X	X	X	X	X	X	-	-	-	X	X	13
35480188	01	AA	202	15514463	15514487	13968706	15514486	35480186	B	-	-	-	X	X	X	X	X	X	X	X	X	X	X	X	X	13
35483852	01	AA	201	15514462	15514487	13968706	15514486	35483862	A	-	-	-	-	-	X	-	X	-	-	-	-	-	-	X	-	3
35483851	01	AA	201	15514462	15514487	13968706	15514486	35483861	A	-	-	-	-	-	-	-	X	-	-	-	-	-	-	-	-	1
35410131	01	AA	201	15514462	15514487	13968706	15514486	35410132	A	-	X	-	-	-	X	X	-	X	X	X	-	X	X	X	X	10
35410130	01	AA	201	15514462	15514487	13968706	15514486	35410133	A	X	X	X	-	X	X	X	-	X	-	X	-	X	X	X	X	12
35410129	01	AA	201	15514462	15514487	13968706	15514486	35410135	A	-	-	-	-	X	-	X	-	-	-	X	X	X	X	-	-	5
35410126	01	-	201	15514462	15514487	13968706	15514486	35411400	A	-	-	-	-	X	-	-	X	-	-	-	-	-	-	X	X	4
35410123	01	-	201	15514462	15514487	13968706	15514486	35410124	A	-	-	-	-	X	-	-	X	-	X	X	-	-	X	-	-	5
35405958	01	-	201	15514462	15514487	13968706	15514486	35405964	A	X	X	-	-	X	-	X	X	X	X	X	X	X	X	X	-	11
35405957	01	-	201	15514462	15514487	13968706	15514486	35405963	A	-	-	-	-	X	-	X	X	X	X	X	X	X	X	X	-	9
35405955	01	-	201	15514462	15514487	13968706	15514486	35405962	A	X	X	-	-	X	-	-	-	-	-	-	-	X	X	X	-	5
35405954	01	-	201	15514462	15514487	13968706	15514486	35405961	A	-	-	-	-	X	-	-	-	-	-	-	-	X	X	X	-	3
35405953	01	-	201	15514462	15514487	13968706	15514486	35405960	A	X	X	-	-	X	-	-	-	-	-	-	-	-	-	-	-	3
35405952	01	-	201	15514462	15514487	13968706	15514486	35405959	A	-	-	-	-	X	-	-	-	-	-	-	-	-	-	-	-	1
35290253	01	AB	201	15514462	15514487	13968706	15514486	35290249	A	-	-	-	-	-	-	-	-	-	X	X	X	X	X	X	X	6
35290252	01	AB	201	15514462	15514487	13968706	15514486	35290248	A	-	-	-	-	-	-	-	X	-	X	X	X	X	X	X	X	7
35290251	01	AB	201	15514462	15514487	13968706	15514486	35290247	A	-	-	-	-	-	-	-	X	-	-	-	-	-	-	-	-	1
35290250	01	AB	201	15514462	15514487	13968706	15514486	35290246	A	-	X	-	X	X	-	X	-	X	-	-	X	X	X	-	X	9
35275821	01	AB	201	15514462	15514487	13968706	15514486	35275824	A	-	-	-	-	-	X	X	X	X	-	-	-	-	X	-	-	5
35275820	01	AB	201	15514462	15514487	13968706	15514486	35275823	A	-	-	-	-	-	-	-	-	-	-	-	-	-	X	-	X	2
35249074	01	AB	201	15514462	15514487	13968706	15514486	35249167	A	-	-	X	X	X	X	X	-	-	X	-	-	-	-	-	X	7
35249073	01	AA	201	15514462	15514487	13968706	15514486	35249166	A	-	-	-	-	-	-	-	-	-	X	X	X	X	X	X	X	8
35249072	01	AA	201	15514462	15514487	13968706	15514486	35249165	A	-	-	-	-	-	-	-	X	X	X	X	X	X	X	X	X	9
35201617	01	AA	201	15514462	15514487	13968706	15514486	35201614	A	X	X	-	X	X	X	X	X	-	X	-	X	-	-	X	X	11
35201616	01	AA	201	15514462	15514487	13968706	15514486	35201613	A	-	-	-	-	-	X	-	X	X	-	-	-	-	X	X	X	6
35123789	01	AA	202	15514463	15514487	13968706	15514486	35123809	B	X	X	X	X	-	-	-	X	-	-	-	-	X	X	X	X	9
35123788	01	AB	202	15514463	15514487	13968706	15514486	35123808	B	-	-	-	-	-	-	-	-	-	-	-	-	X	X	X	X	4
35123787	01	AA	202	15514463	15514487	13968706	15514486	35123806	B	-	-	-	-	-	-	-	-	-	-	-	-	X	X	X	X	5
35123786	01	AA	202	15514463	15514487	13968706	15514486	35123805	B	X	X	X	X	-	X	X	-	-	-	-	-	X	X	X	X	10
35123785	01	AA	202	15514463	15514487	13968706	15514486	35123804	B	-	-	-	-	X	-	-	-	-	-	-	-	X	X	X	X	5
35123784	01	AA	202	15514463	15514487	13968706	15514486	35123802	B	X	X	X	X	X	-	X	-	-	-	-	-	X	X	X	X	10
35019568	01	AB	201	15514462	15514487	13968706	15514486	35019539	A	-	-	-	-	-	-	X	X	X	X	X	X	X	X	-	X	9
35019566	01	AB	201	15514462	15514487	13968706	15514486	35019538	A	X	-	-	-	-	-	-	-	-	-	-	-	-	X	-	-	2
35019564	01	AB	201	15514462	15514487	13968706	15514486	35019537	A	X	X	X	X	-	-	-	X	X	X	X	X	X	-	-	X	10
35019562	01	AB	201	15514462	15514487	13968706	15514486	35019536	A	-	-	-	-	-	-	-	X	-	X	X	-	-	-	-	-	3
35019560	01	AB	201	15514462	15514487	13968706	15514486	35019535	A	X	X	X	X	X	X	X	X	X	X	-	-	-	-	-	-	11
35019558	01	AB	201	15514462	15514487	13968706	15514486	35019534	A	X	X	X	X	X	X	-	X	-	X	-	-	-	-	X	X	11
35019556	01	AB	201	15514462	15514487	13968706	15514486	35019533	A	-	X	-	-	-	-	-	X	-	-	-	-	-	X	X	X	5
35019554	01	AB	201	15514462	15514487	13968706	15514486	35019532	A	X	X	X	X	X	X	-	X	-	X	-	-	-	-	-	X	9
35019552	01	AB	201	15514462	15514487	13968706	15514486	35019531	A	-	X	-	-	-	-	-	X	-	-	-	-	-	-	-	X	3
35019550	01	AB	201	15514462	15514487	13968706	15514486	35019530	A	-	-	-	-	-	-	-	-	X	X	X	X	X	X	X	X	9
35019548	01	AB	201	15514462	15514487	13968706	15514486	35019529	A	X	X	X	X	X	X	-	-	-	-	-	-	X	X	-	-	8
35019546	01	AB	201	15514462	15514487	13968706	15514486	35019528	A	X	X	X	X	X	X	-	-	-	X	X	X	X	X	X	-	11
35019544	01	AB	201	15514462	15514487	13968706	15514486	35019527	A	-	-	-	-	X	-	-	-	-	X	X	X	X	X	X	-	6
35019542	01	AB	201	15514462	15514487	13968706	15514486	35019526	A	-	-	-	X	-	-	-	X	-	-	X	X	-	X	-	X	6
35019540	01	AB	201	15514462	15514487	13968706	15514486	35019525	A	X	X	X	X	X	X	-	-	-	X	X	X	X	X	X	X	14
35019961	01	AB	201	15514462	15514487	13968706	15514486	35019524	A	X	X	X	X	X	X	-	-	-	X	-	X	X	X	X	X	11
33377712	02	AD	201	15514462	15514487	13968706	15514486	33377709	A	-	-	-	-	-	-	X	X	X	X	X	X	X	X	-	X	9
33374881	02	AD	201	15514462	15514487	13968706	15514486	33374895	A	-	-	-	-	-	-	-	-	-	-	-	-	-	X	-	-	1
33374880	02	AD	201	15514462	15514487	13968706	15514486	33374894	A	-	-	-	-	-	-	-	-	-	X	-	-	-	-	-	-	1
33374879	02	AD	201	15514462	15514487	13968706	15514486	33374893	A	-	-	-	-	-	-	-	-	-	-	-	-	X	X	-	X	3
33374878	02	AD	201	15514462	15514487	13968706	15514486	33374892	A	-	-	-	-	-	-	-	-	-	-	-	-	-	-	-	-	1
33368205	02	AD	201	15514462	15514487	13968706	15514486	33368227	A	-	-	-	-	-	-	-	-	-	X	-	-	X	-	-	-	2
33368169	02	AD	201	15514462	15514487	13968706	15514486	33368226	A	-	-	-	-	-	-	-	-	-	-	X	X	X	X	-	X	4
33368168	02	AD	201	15514462	15514487	13968706	15514486	33368225	A	X	X	X	X	X	X	X	-	-	X	-	X	X	X	X	X	12
33368167	02	AD	201	15514462	15514487	13968706	15514486	33368224	A	-	X	-	X	-	X	X	-	-	X	-	X	-	X	-	X	9
33368166	02	AD	201	15514462	15514487	13968706	15514486	33368223	A	-	-	-	-	-	X	-	-	-	X	-	X	-	X	-	X	5
33368165	02	AD	201	15514462	15514487	13968706	15514486	33368222	A	-	-	-	-	-	X	-	-	-	X	-	X	X	-	X	X	7
33368164	02	AD	201	15514462	15514487	13968706	15514486	33368221	A	-	-	-	X	X	-	-	X	-	X	X	X	X	X	X	-	9
33368163	02	AD	201	15514462	15514487	13968706	15514486	33368220	A	-	-	-	-	-	-	-	X	-	X	X	-	X	-	-	-	4
33368162	02	AD	201	15514462	15514487	13968706	15514486	33368219	A	-	X	X	X	-	-	-	X	-	X	X	X	X	X	X	-	10
33350503	02	AC	201	15514462	15514487	13968706	15514486	33350490	A	-	-	-	-	X	-	X	X	-	X	X	X	-	X	X	-	10
33350502	02	AC	201	15514462	15514487	13968706	15514486	33350489	A	-	-	X	-	-	X	-	-	-	-	-	-	-	X	X	-	4
33350501	02	AC	201	15514462	15514487	13968706	15514486	33350488	A	-	-	X	-	-	X	-	-	-	-	-	-	-	X	-	-	2
33350500	02	AC	201	15514462	15514487	13968706	15514486	33350487	A	X	-	-	-	-	-	-	-	-	-	X	-	X	-	X	-	5
33350499	02	AC	201	15514462	15514487	13968706	15514486	33350486	A	-	-	X	-	-	-	-	-	-	-	-	-	-	-	X	X	3
33350498	02	AC	201	15514462	15514487	13968706	15514486	33350485	A	-	-	-	-	-	X	X	X	X	X	X	X	X	X	X	X	11
33350497	02	AC	201	15514462	15514487	13968706	15514486	33350484	A	X	-	-	-	X	-	-	X	-	X	X	-	X	-	-	-	7
33350496	02	AC	201	15514462	15514487	13968706	15514486	33350483	A	-	X	-	-	-	-	-	X	-	-	X	X	-	X	-	-	5
33350495	02	AC	201	15514462	15514487	13968706	15514486	33350482	A	-	-	-	-	-	X	-	X	X	X	X	X	-	X	-	-	9
33350494	02	AC	201	15514462	15514487	13968706	15514486	33350479	A	-	-	X	-	-	-	-	-	-	-	-	-	-	-	-	-	1
PART NO	REV	N/P	TYPE	CONNECTOR	PLR	SEAL CONN	SEAL CBL	RETAINER	USCAR	1	2	3	4	5	6	7	8	9	10	11	12	13	14	15	16	BLOCKED CAVITIES

PLUGGED BLOCKED CIRCUITS POSITIONS

NOTES

1. UNLESS OTHERWISE SPECIFIED AND/OR INDICATED:

   DIMENSIONS ARE TO FACE OF VIEW SHOWN AND AUTOMATICALLY ROUNDED BY COMPUTER FOR INSPECTION (SEE MATH MODEL FOR PRECISE DIMENSIONS). FOR ALL OTHER DIMENSIONS NOT SHOWN BUT REQUIRED FOR TOOL BUILD, SEE MATH MODEL FOR PRECISE TOOL PATH DATA.

2. PART IS MANUFACTURED TO GEOMETRIC TOLERANCES. CENTERLINE DIMENSIONS ARE FOR REFERENCE ONLY.

3. SEALING CODE 4 - DESIGN WILL MEET REQUIREMENTS OF SAE/USCAR-2 CONNECTOR SYSTEM ENVIRONMENTAL TEST FLOWCHART (PRESSURE/VACUUM AND SUBMERSION).

4. THIS PRODUCT IS NOT CATEGORIZED AS AN APPEARANCE ITEM. MINOR IMPERFECTIONS INCLUDING, BUT NOT LIMITED TO, FLOW MARKS, COLOR BLEMISHES, GATE VESTIGE, AND SOFT FLASH THAT DO NOT AFFECT THE FIT, FORM, OR FUNCTION OF THE PART ARE PERMISSIBLE PER EANP_4-3_CS_01_EN.

5. FOR APPLICATION DATA SEE THE INDIVIDUAL APPLICATION DRAWINGS.

6. ASSEMBLY TO BE USED WITH APPROPRIATE APTIV HOLDER DESIGN.

7. ASSEMBLY TO BE PROCESSED USING APTIV CONNECTION SYSTEMS BEST PRACTICE METHODS AND/OR CONNECTOR ASSEMBLY INSTRUCTIONS AND APPLICABLE REPAIR PROCEDURES.

8. BEFORE TERMINAL ASSEMBLY, VERIFY THAT PLR IS IN THE PRE-STAGE POSITION ON THE CONNECTOR. IF NOT, RETURN PLR TO PRE-STAGE POSITION.

9. FOR ALL OPEN CAVITY VERSIONS SEE SHEET 1.

10. FOR ASSEMBLIES WITH CPA SEE DRAWING 15514480.

(6) PROCESS SENSITIVE DIMENSION

DIMENSIONS ENCLOSED IN ( ) INDICATE REFERENCE DIMENSIONS AND NO TOLERANCE IS ASSIGNED TO THESE DIMENSIONS.

DIMENSIONAL RANGE (MM)
FROM 0 TO 6 | >6 TO 30 | >30 TO 120 | >120 TO 400 | >400 TO 1000 | >1000 TO 2000 | >2000 TO 4000
TOLERANCE UNLESS OTHERWISE SPECIFIED
±0.15 | ±0.2 | ±0.3 | ±0.5 | ±0.8 | ±1.2 | ±1.6
ANGULAR TOLERANCE ±0°

REFERENCE

THIRD ANGLE PROJECTION

DO NOT SCALE
USE MATH DATA

NX

ALL DIMENSIONS ARE IN MILLIMETERS

THIS DRAWING IS THE PROPERTY OF APTIV AND CONTAINS APTIV CONFIDENTIAL INFORMATION. THE RECEIPT OF THIS DRAWING OR THE UTILIZATION OF THIS DOCUMENT OR ITS RELATED CAD MATH DATA, WILL NOT BE COMMUNICATION OF ANY CONTENT TO OTHERS, WITHOUT EXPRESS AUTHORIZATION, IS PROHIBITED.

		DATE
DR		
APVD	G. LOPEZ G.	01JN16
APVD	G. LOPEZ G.	01JN16
APVD	JORGE ESCAMILLA	03JN16
APVD		
APVD		

SUBSTANCES OF CONCERN AND RECYCLED CONTENT PER APTIV CDM9000

SEE CHART

DRAWING NAME

TAXI ASM CONN 16 F OCS 1.5 SLD

DRAWING NUMBER

15532154

SIZE	SCALE	FORMAT NO	SHEET NO	SHTS	REV	N/P
A1x3	5:1	1 OF 2	2 OF	R	29	-

DRAWING NUMBER

15532154

SIZE	SCALE	FORMAT NO	SHEET NO	SHTS	REV	N/P
A1x3	5:1	1 OF 2	2 OF	R	29	-

15532154

Page 1 of 1
Printed: 15-Mar-21
Time: 10:44:18
Date: 15-Mar-2021
Sheet: 1 of 1

Mouser Electronics

Authorized Distributor

Click to View Pricing, Inventory, Delivery & Lifecycle Information:

Aptiv:
35290250