SYMBOL DEFINITION		
A DIMENSION WITHOUT AN INSPECTION REPORT SYMBOL (□) DOES NOT REQUIRE INSPECTION. IT MAY BE CONTROLLED ON THE INDIVIDUAL COMPONENT DRAWING.	TOTAL NO OF INSPECTIONS REQUIRED	42
	LAST NO. USED	34

MISSING SYMBOLS
NO MISSING SYMBOL NUMBER

DWG STATUS					ZONE	REVISION HISTORY	AUTH	DR	APVD	APVD
DATE	STS	RD	A/P	CHG					1	2
03JA96	R	A	-	-	-	RELEASED	960005	DMB	MVA	DMB
05DE07	R	02	-	-	-	MAT'L CALLOUT UPDATED	483178	VMP	PYP	VMP

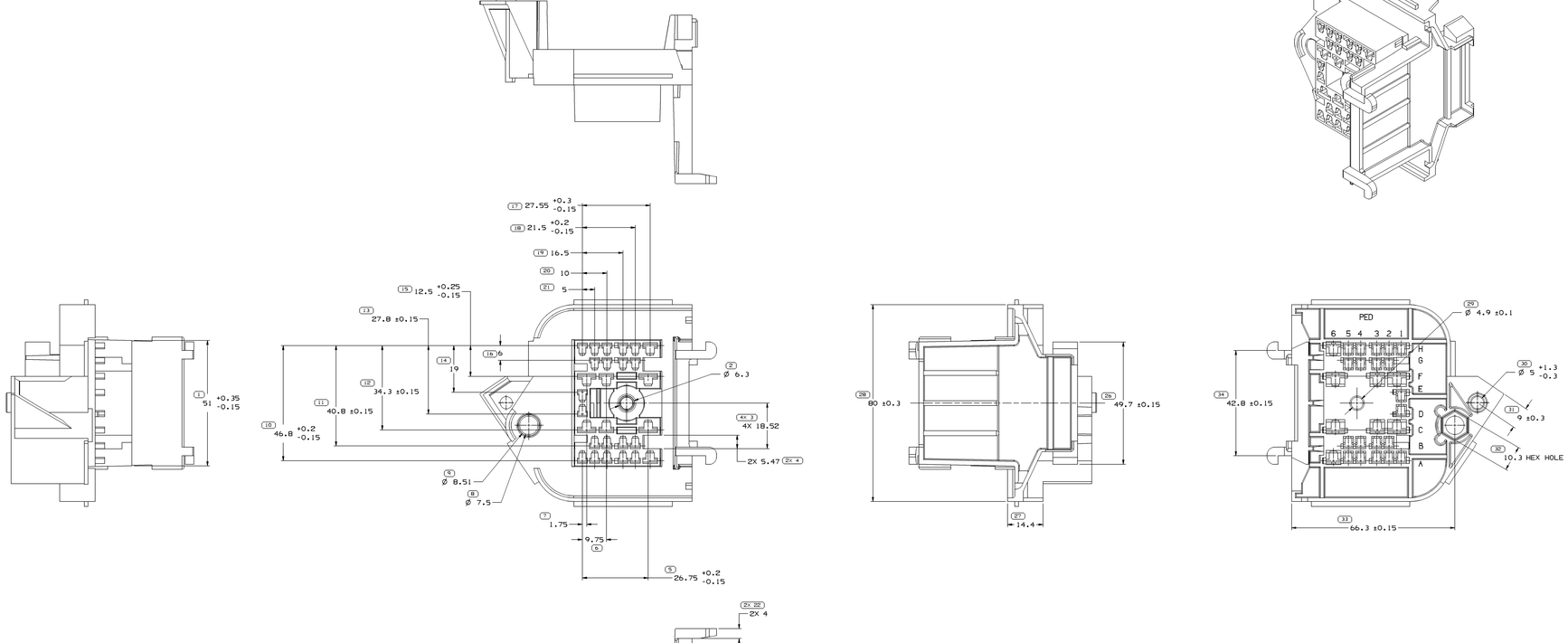

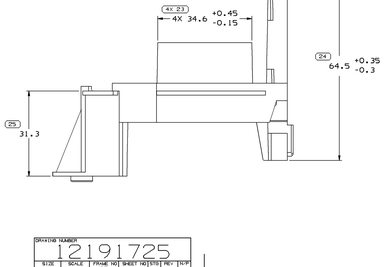

NOTES

1. UNLESS OTHERWISE SPECIFIED AND/OR INDICATED:

   DIMENSIONS ARE TO FACE OF VIEW SHOWN AND AUTOMATICALLY ROUNDED BY COMPUTER FOR INSPECTION (SEE MATH MODEL FOR PRECISE DIMENSIONS). FOR ALL OTHER DIMENSIONS NOT SHOWN BUT REQUIRED FOR TOOL BUILD, SEE MATH MODEL FOR PRECISE TOOL PATH DATA.

2. MATERIAL RECYCLING CODE PER ISO 11469. (2.3)X(0.1) CHARACTERS AS SHOWN TO BE LOCATED ON ANY EXTERIOR SURFACE. OPTIONAL CONSTRUCTION TO BE NO MATERIAL RECYCLING CODE.

3. (2.3)X(0.1) DELPHI CORPORATE BRAND TO BE LOCATED ON ANY EXTERIOR SURFACE, PREFERABLY VISIBLE AT FINAL ASSEMBLY. OPTIONAL CONSTRUCTION FOR EXISTING TOOLING MAY BE "PED".

4. FOR APPLICATION DATA SEE THE APPLICATION DRAWING.

5. CONNECTOR ENGAGE FORCE CODE 5.

DRAWING NUMBER							
12191725							
SIZE	SCALE	PAGE NO	SHEET NO	SHEET TOT	REV	REC	SKP
A1x3	2:1	2 OF 1	1 OF 1	R	02	-	

DWG TYPE	PART DRAWING
STYLE	
VOLUME (CU) 44.630	SIZE D

UNLESS OTHERWISE SPECIFIED
THIS DRAWING IS IN ACCORDANCE WITH ASME Y14.5M-1994 AS MODIFIED BY THE GLOBAL DIMENSIONING AND TOLERANCING STANDARD. ALL DIMENSIONS AND TOLERANCES OF FEATURES ARE DEFINED EXPLICITLY, REGARDLESS OF SYTEM REFERENCES.

ALL DIMENSIONS ARE IN MILLIMETERS

(29) PROCESS SENSITIVE DIMENSION

REFERENCE

DIMENSION ENCLOSED IN ( ) INDICATE REFERENCE DIMENSION, NO AS TOLERANCE LIMITS ARE ESTABLISHED

DIMENSIONAL RANGE (MM)									
FROM	0	3	30	6	30	120	150	250	400
TO	3	30	6	30	120	150	250	400	600
TOLERANCE UNLESS OTHERWISE SPECIFIED									
±0.15	±0.2	±0.3	±0.4	±0.5	±0.6	±0.8	±1	±1.2	
ANGULAR TOLERANCE ±2°									

THIRD ANGLE PROJECTION

DO NOT SCALE

SEE MATH DATA

SUBSTANCES OF CONCERN AND RECYCLED CONTENT PER DELPHI (PAHRD)
MATERIAL POLYAMIDE COMPOUND CREAM

DELPHI

DELPHI PACKARD ELECTRICAL/ELECTRONIC ARCHITECTURE
WARREN, OH

DR	DATE
APVD1 E. MONCISVAIS	03JA96
APVD2 MANUEL VEGA	04JA96
APVD3 R.A. AUBEL	20FE96
APVD4	
APVD5	

DRAWING NAME
CONN 28 F M/P 2B0 480 630

DRAWING NUMBER							
12191725							
SIZE	SCALE	PAGE NO	SHEET NO	SHEET TOT	REV	REC	SKP
A1x3	2:1	1 OF 1	1 OF 1	R	02	-	

ISI 9152