SYMBOL DEFINITION			MISSING SYMBOLS
A DIMENSION WITHOUT AN INSPECTION REPORT SYMBOL (▭) DOES NOT REQUIRE INSPECTION. IT MAY BE CONTROLLED ON THE INDIVIDUAL COMPONENT DRAWING.	TOTAL NO OF INSPECTIONS REQUIRED	69	NO MISSING SYMBOL NUMBER
	LAST NO. USED	25	

DWG STATUS					ZONE	REVISION HISTORY	AUTH	DR	APVD	APVD 2
DATE	STS	REV	A/P	CHG						
04AUG3	R	B4	-	-		REDRAWN TO PD AND REVISED TOLERANCES 18 PLCS!	244230	ESF	RCH	JH
14DCD3	R	B5	-			UPDATED PDM ATTRIBUTES	245481	ESF	RCH	JH
10FEB6	R	B6	-			4X 9.65 +0.15/-0.35 WAS 4X 9.65 ±0.15, 6X 34.4 +0.15/-0.6 WAS 6X 34.4 +1.75/-0.5, 6X 17.2 +0.15/-0.35 WAS 6X 17.2 ±0.15, 5X 21.2 +0.15/-0.5 WAS 5X 21.2 ±0.15, 29.6 +0.15/-0.5 WAS 29.6 ±0.15 & 33.4 ±0.15 WAS VARY TO 32 DUE TO BOW WAS 33.4	277362	HCD	TRG	EST
17FEB6	R	B7	-			PROCESS SENSITIVE DIMENSION WAS DIM #15	277569	RMD	TRG	WTM

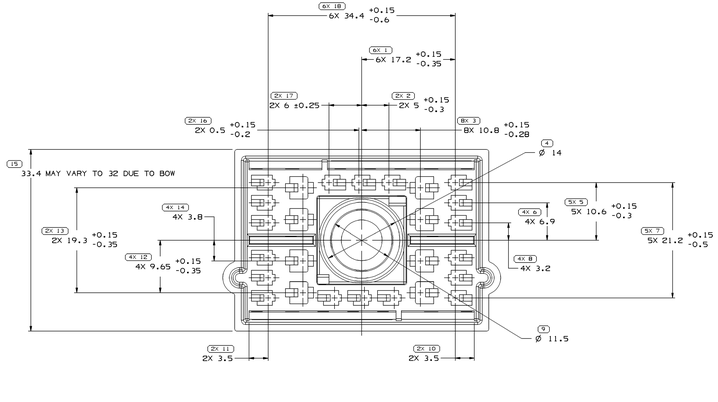

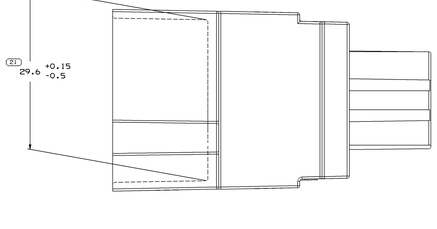

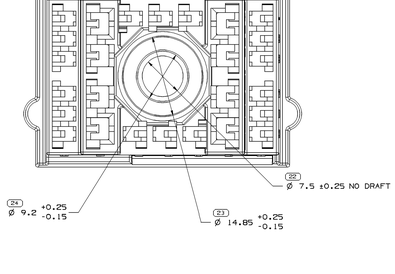

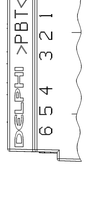

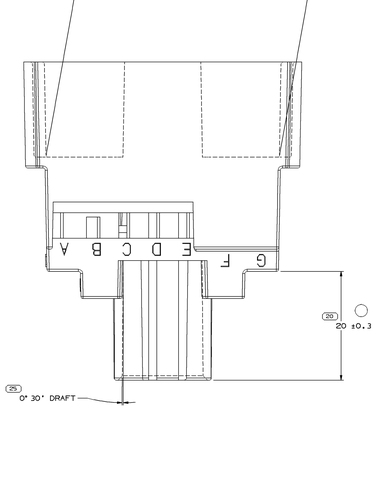

NOTES

1. UNLESS OTHERWISE SPECIFIED AND/OR INDICATED:
   DIMENSIONS ARE TO FACE OF VIEW SHOWN AND AUTOMATICALLY ROUNDED BY COMPUTER FOR INSPECTION !SEE MATH MODEL FOR PRECISE DIMENSIONS!. FOR ALL OTHER DIMENSIONS NOT SHOWN BUT REQUIRED FOR TOOL BUILD, SEE MATH MODEL FOR PRECISE TOOL PATH DATA.

2. MATERIAL RECYCLING CODE >PBT< PER SAE J1344. (2.3)X(0.1) RAISED CHARACTERS AS SHOWN TO BE LOCATED ON ANY EXTERIOR SURFACE. OPTIONAL CONSTRUCTION TO BE NO MATERIAL RECYCLING CODE.

3. THIS PART IS NOT CONTROLLED FOR AUTOMATIC FEEDING.

4. MATING COMPONENTS OR EQUIVALENT:
   CONNECTOR 12064843

5. THIS PART ACCEPTS THE FOLLOWING COMPONENTS OR EQUIVALENT:
   CAVITIES A1,A2,A3,A4,A5,A6,B1,B2,B3,B4,B5,B6.
   C2,D2,E2,C1,D1,E1 TO ACCEPT 12040993 TERMINAL OR EQUIVALENT.
   CAVITIES B1,B2,B3,B4,F1,F2,F3,F4 TO ACCEPT 12034047 TERMINAL OR EQUIVALENT.
   CAVITIES B1,B4,F1,F4 ARE NOT STANDARD.
   SECONDARY LOCK COMB 12064844
   BOLT 12064848

6. (2.3)X(0.1) RAISED DELPHI CORPORATE BRAND TO BE LOCATED ON ANY EXTERIOR SURFACE. PREFERABLY VISIBLE AT FINAL ASSEMBLY. OPTIONAL CONSTRUCTION TO BE "PED" OR NO LOGO.

7. CAVITIES ARE INDENTIFIED BY A TWO DIGIT ALPHANUMERIC NUMBER. THE FIRST DIGIT BEING THE LETTER OF THE COLUMN THAT THE CAVITY IS IN THE SECOND DIGIT BEING THE NUMBER OF CAVITIES THE CAVITY IS AWAY FROM THE SIDE OF THE CONNECTOR OPPOSITE THE SIDE WITH LETTERS.

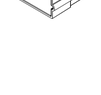

DRAWING NUMBER							
12064842							
SIZE	SCALE	FRAME NO	SHEET NO	TOTAL	REV	A/P	
A1x3	4:1	2 OF 2	1 OF 1	R	B7	-	

DWG TYPE	
PART DRAWING	
STYLE	
VOLUME CONT	23.724
SIZE	D

UNLESS OTHERWISE SPECIFIED

THIS DRAWING IS IN ACCORDANCE WITH ASME Y14.5M-1994 AS MODIFIED BY THE DELPHI DIMENSIONING AND TOLERANCING STANDARD. THIS DRAWING DEFINES A PART FEATURED BY THE RIGHT-HANDED COORDINATE SYSTEM REFERENCED.

ALL DIMENSIONS ARE IN MILLIMETERS

(20) PROCESS SENSITIVE DIMENSION

DIMENSIONS ENCLOSED IN ( ) INDICATE REFERENCE DIMENSIONS, NO GD TOLERANCE LIMITS ARE ESTABLISHED

| DIMENSIONAL RANGE (MM) | | | | | | |